EL-0069

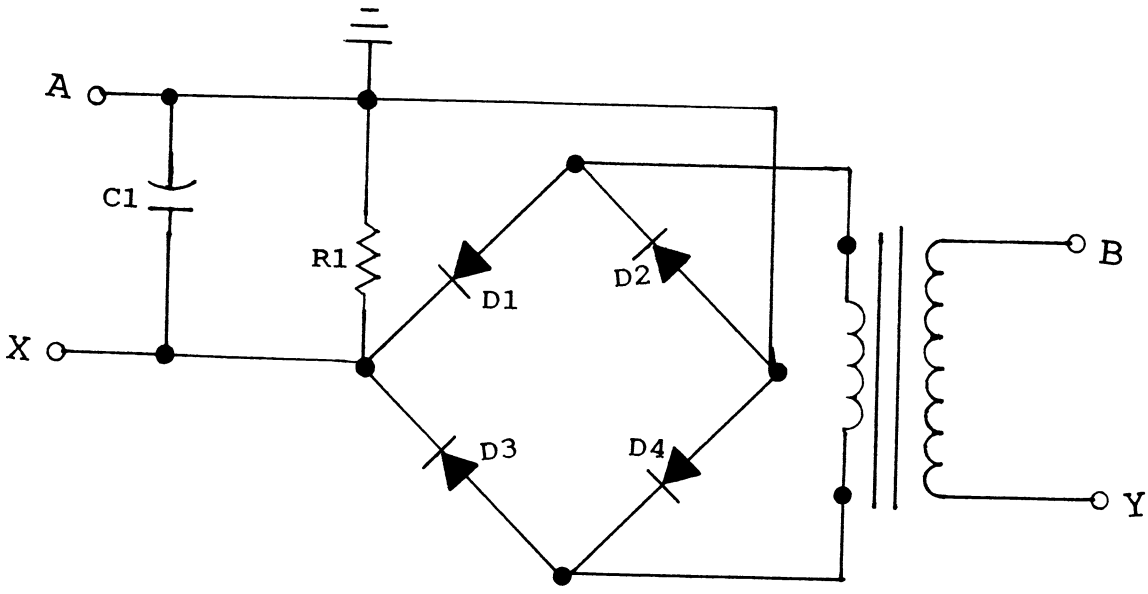

EL-0070

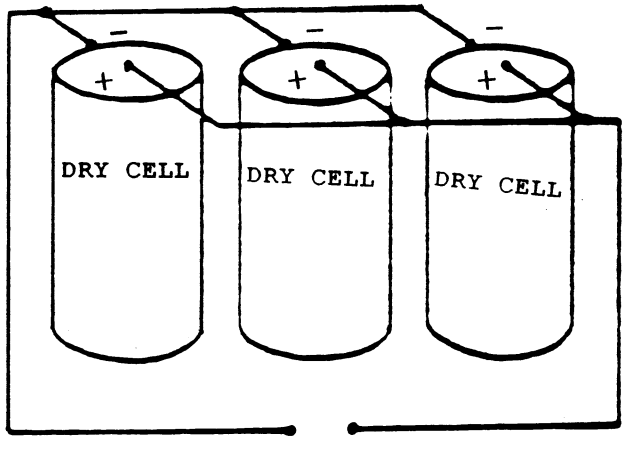

EL-0071

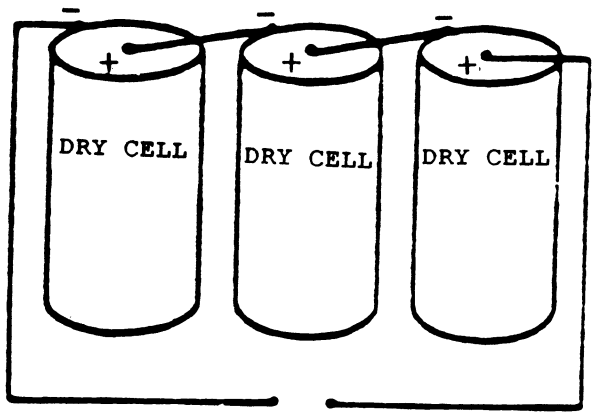

EL-0072

	INPUT		OUTPUT
CONTACTS	A	B	Z
VOLTAGE	1	0	1
	0	1	1
	1	1	1
	0	0	0

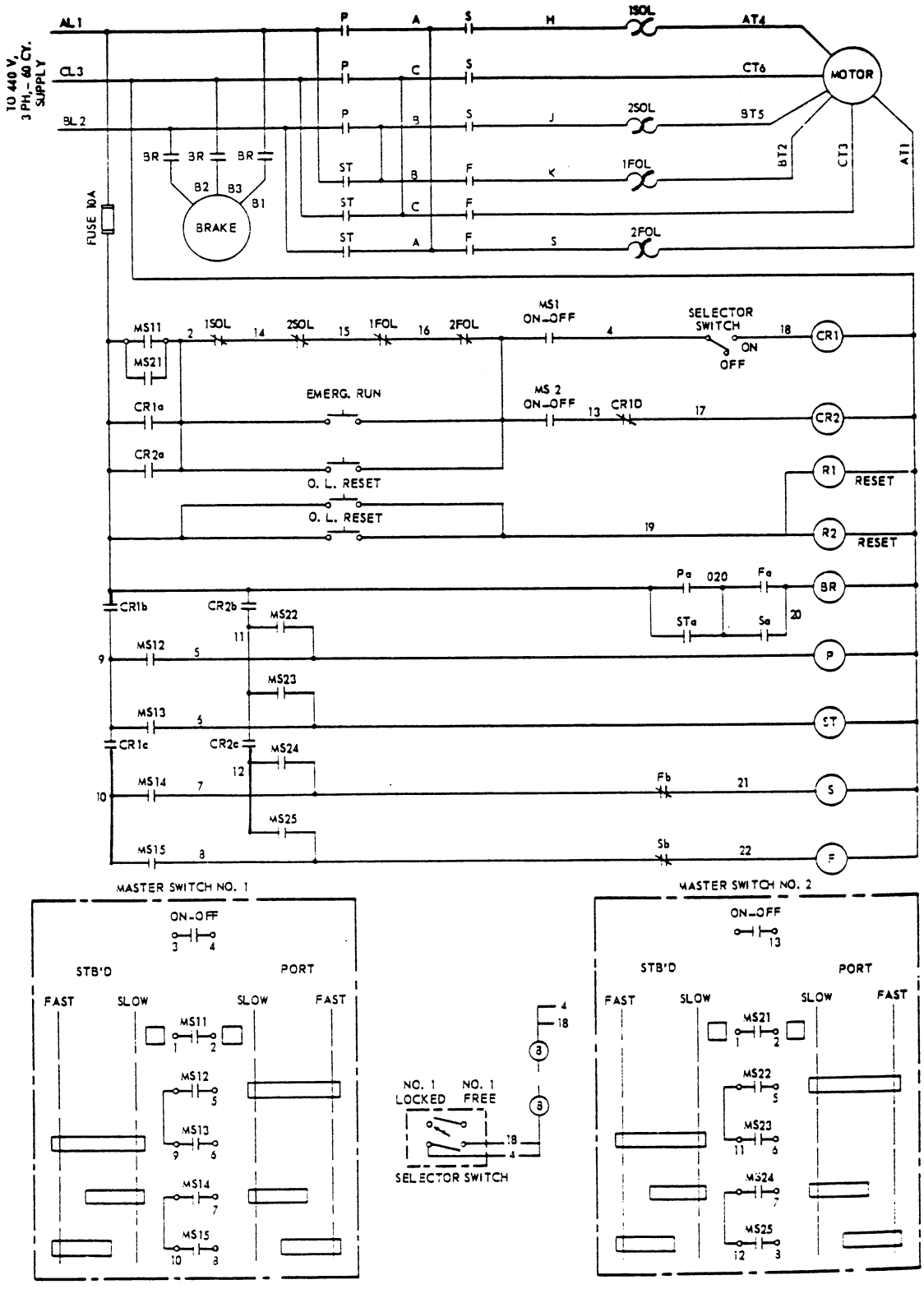

Reversing across-the-line starter for two-speed anchor windlass

EL-0074

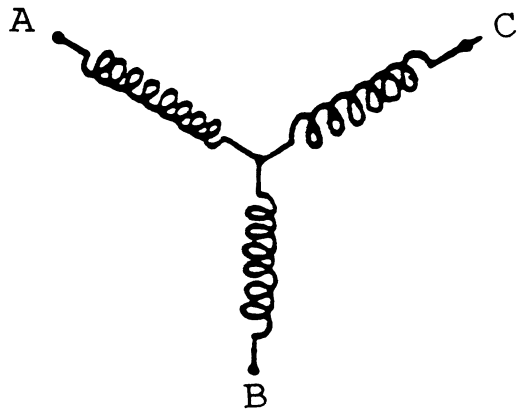

EL-0075

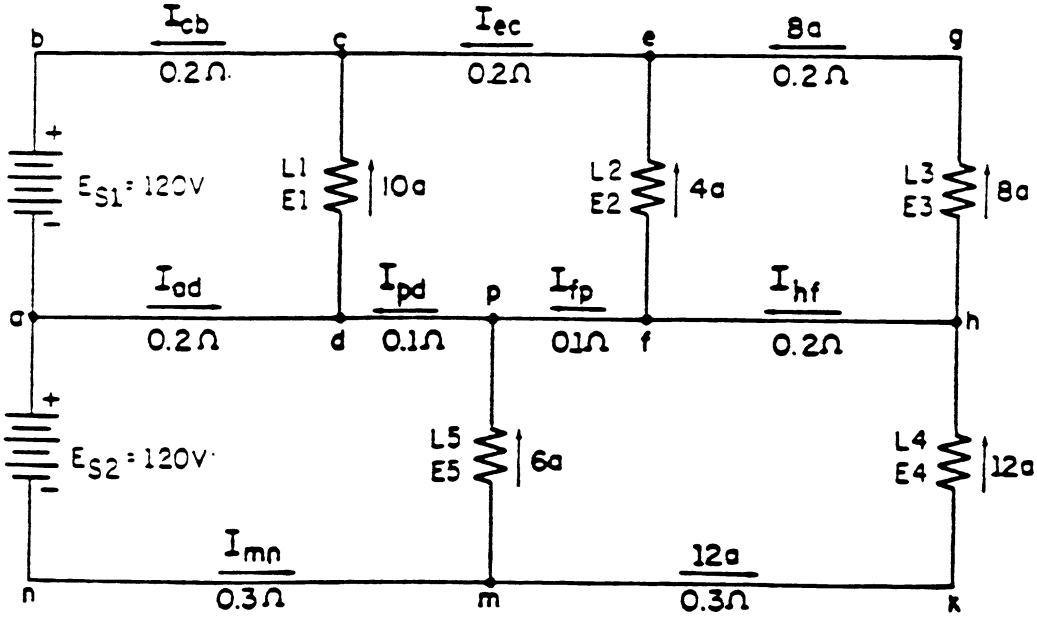

EL-0076

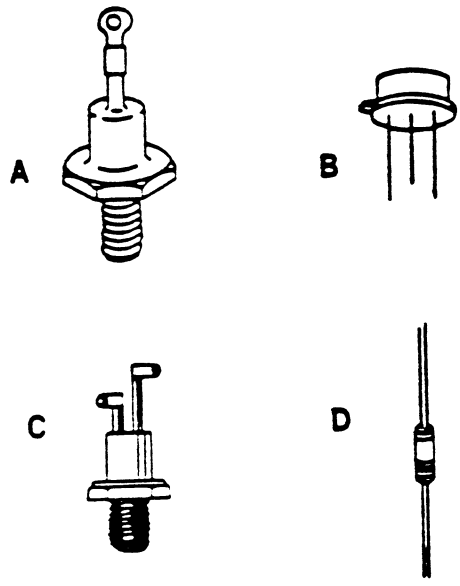

EL-0077

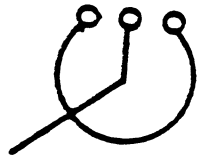

EL-0078

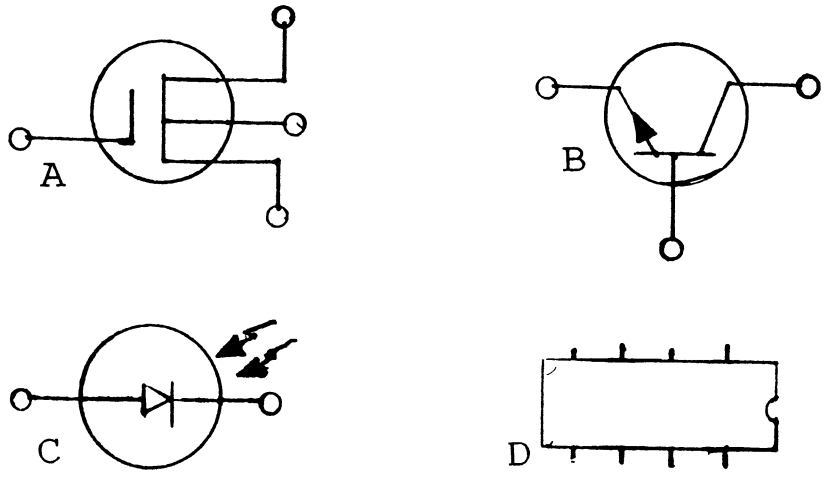

EL-0079

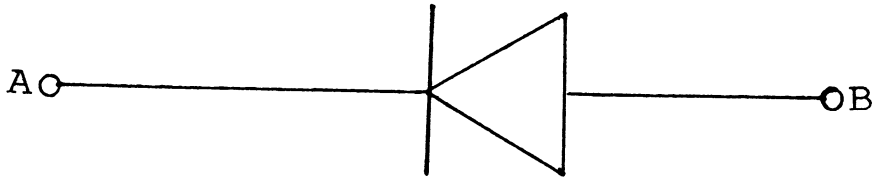

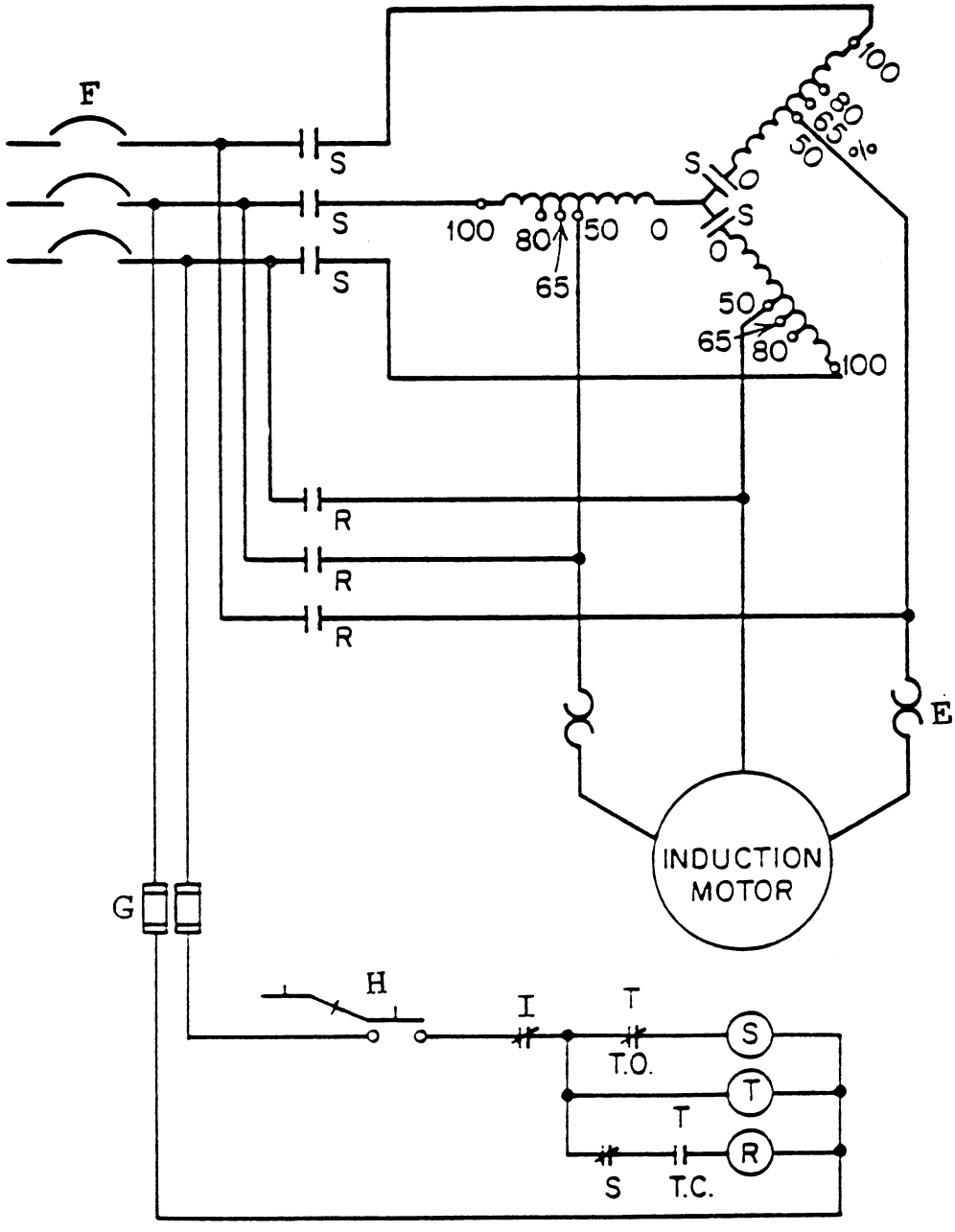
F
S
S
S
100
80
65
50
0
S
S
0
0
50
65
80
100
R
R
R
E
INDUCTION
MOTOR
G
H
I
T
T.O.
S
T
T
R
S
T.C.

EL-0081

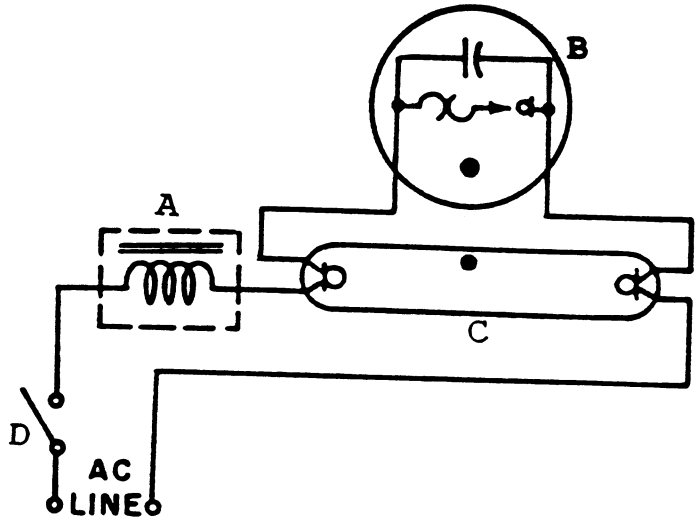

EL-0082

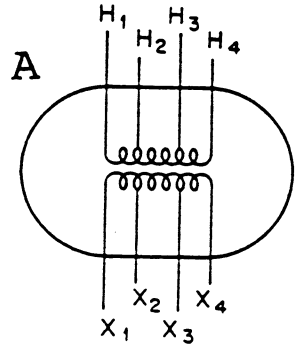

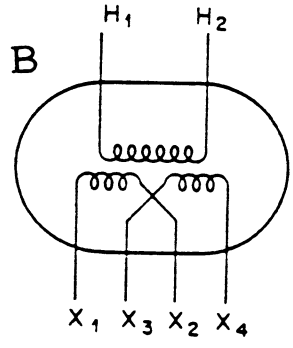

EL-0083

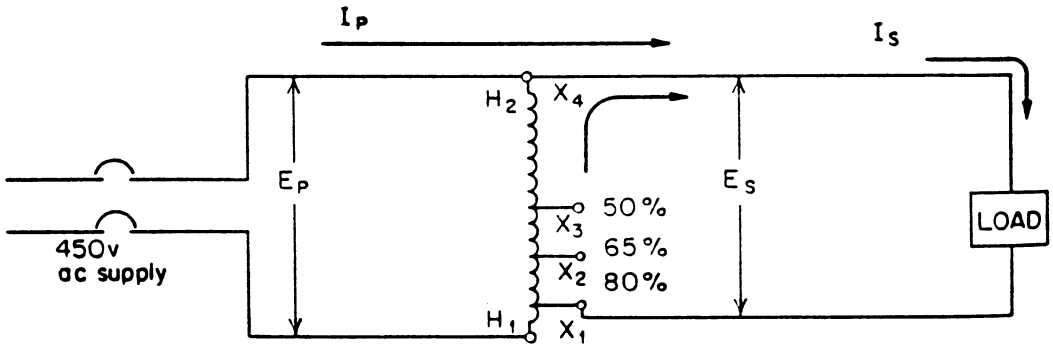

EL-0084

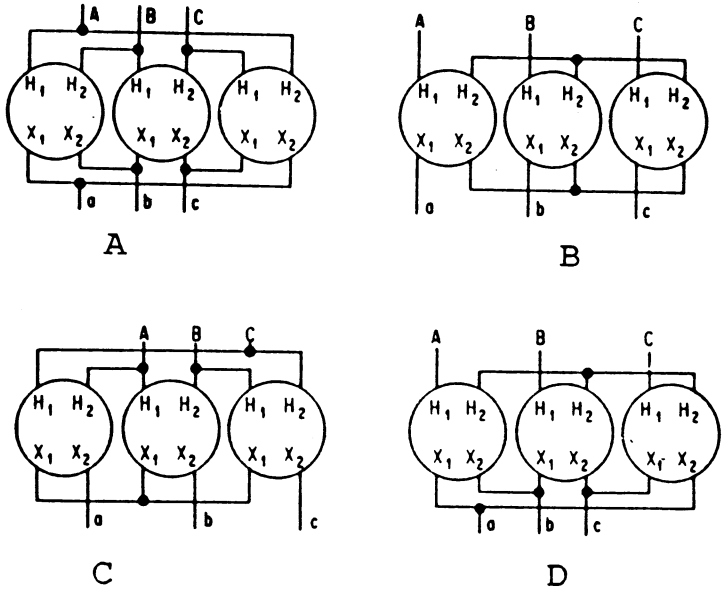

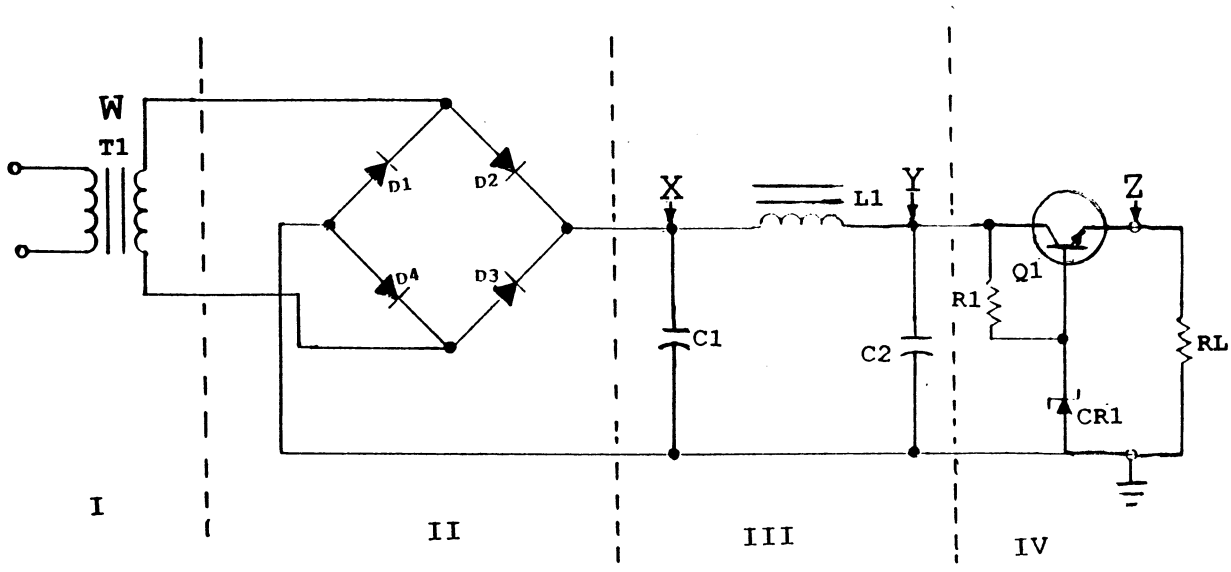
W
T1
D1
D2
D3
D4
X
L1
Y
Z
Q1
R1
C1
C2
RL
CR1
I
II
III
IV

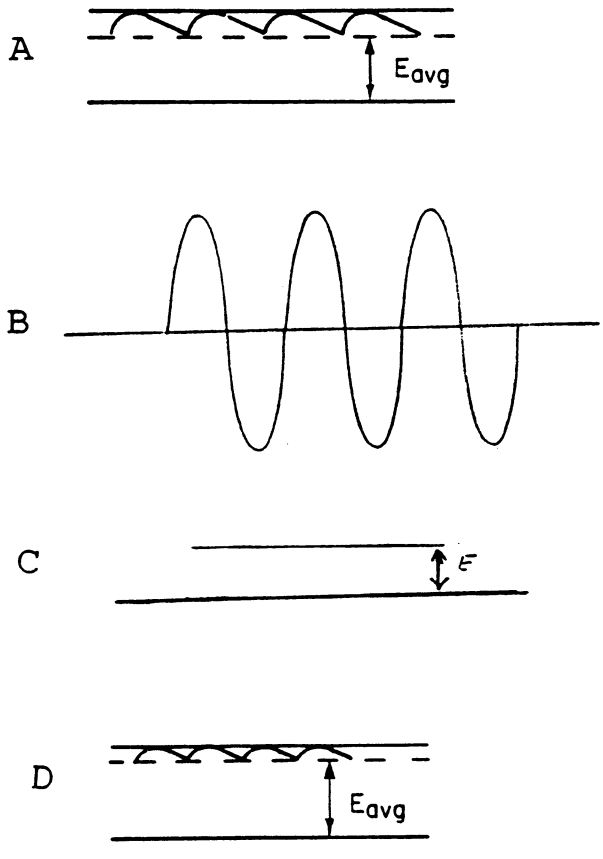
A
Eavg
B
C
E
D
Eavg

EL-0086

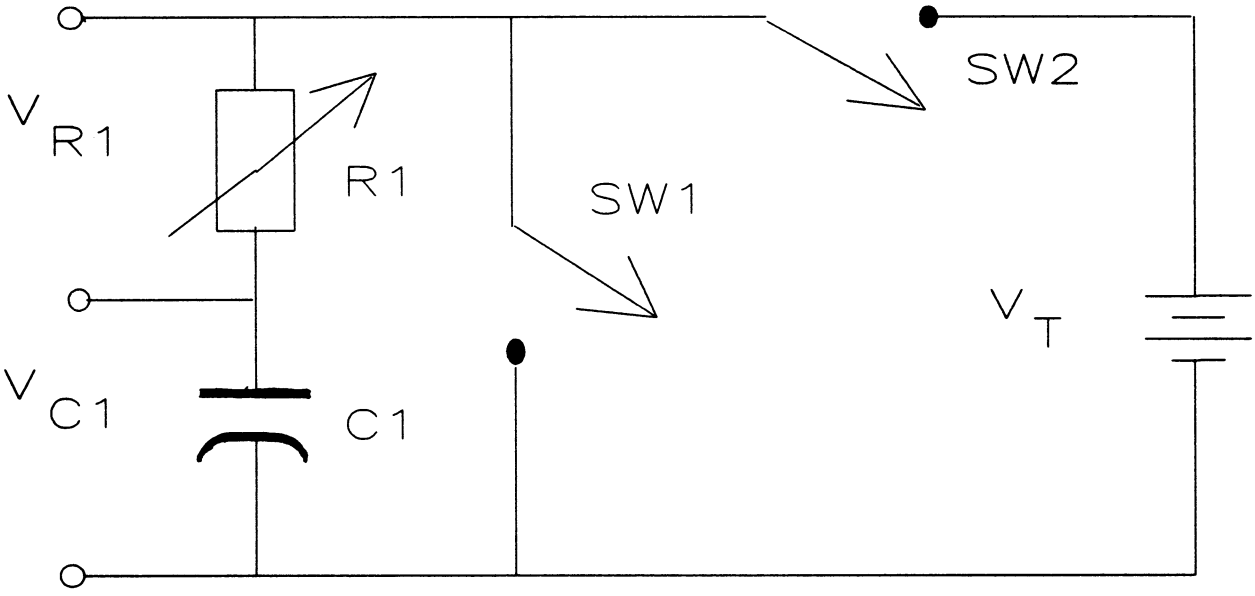

EL-0087

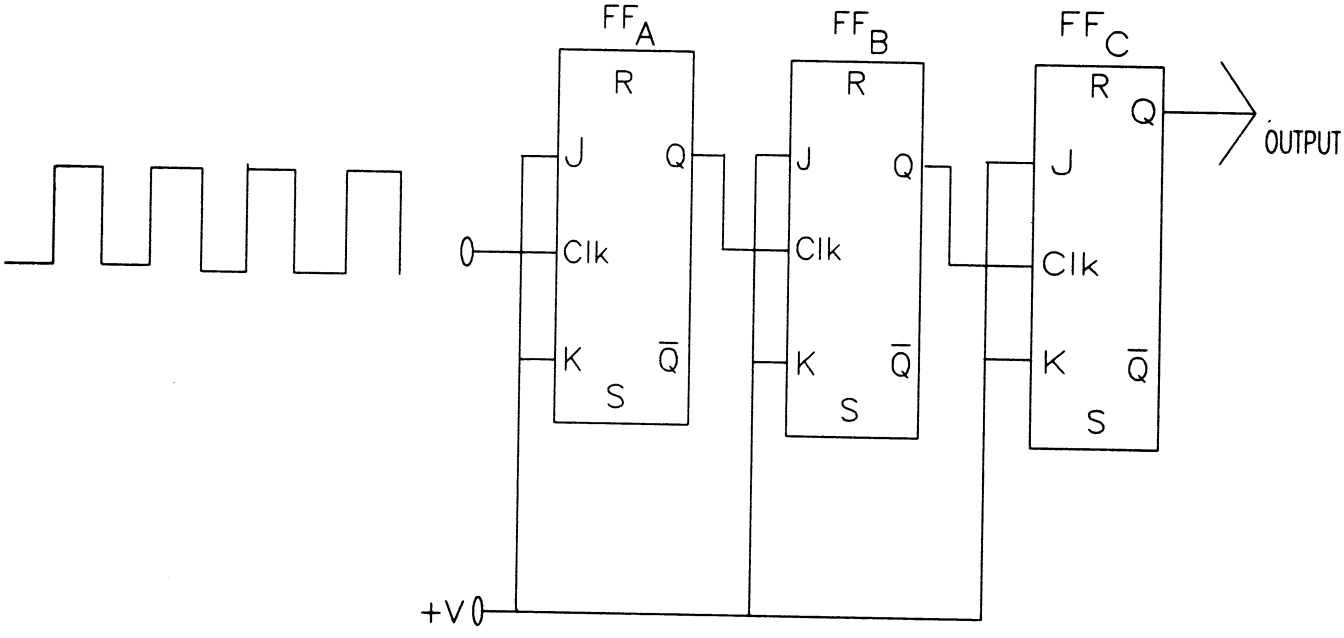

EL-0088

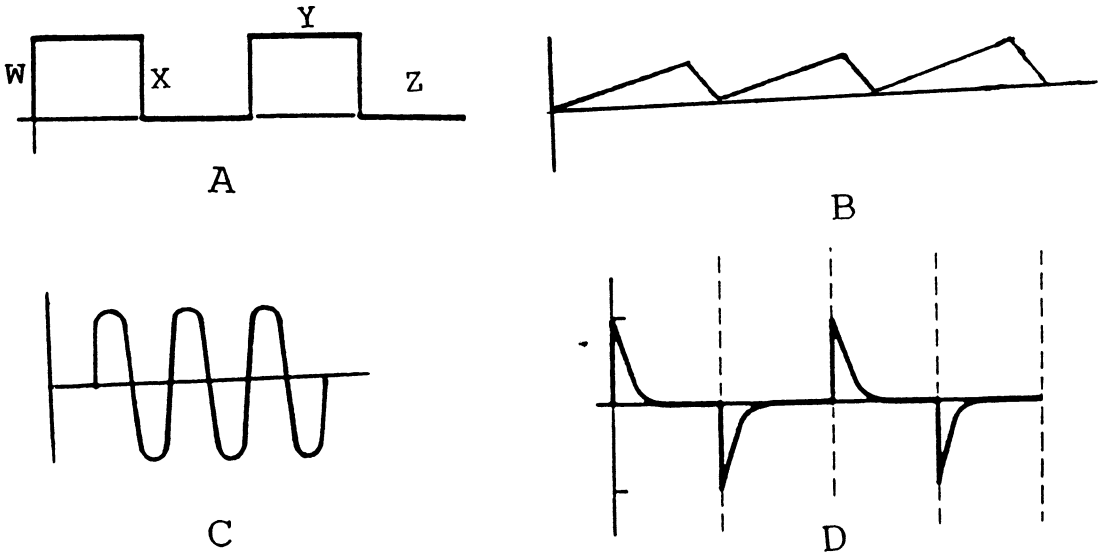

EL-0089

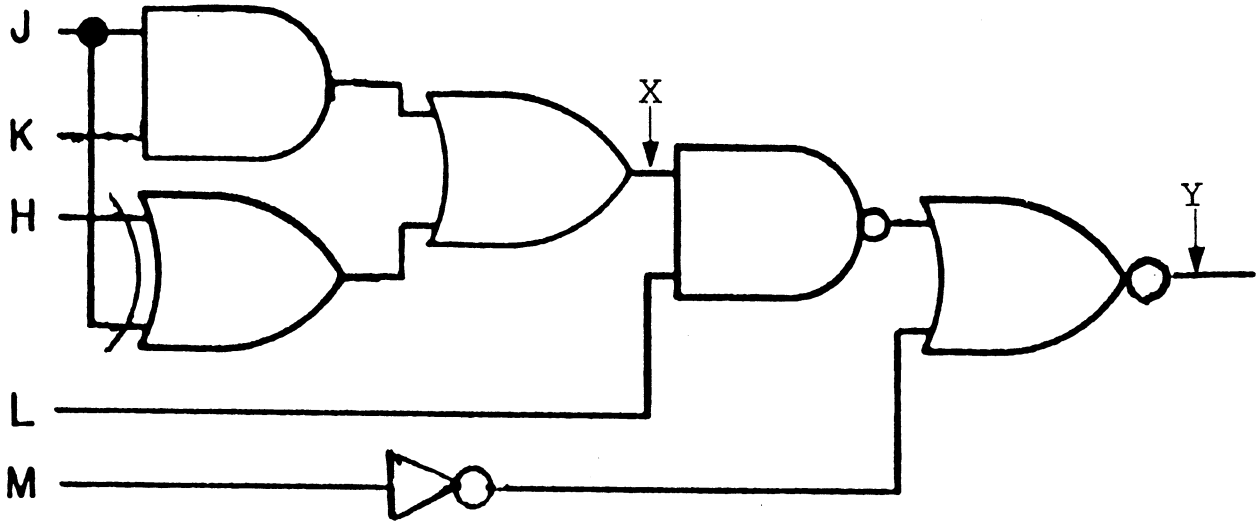

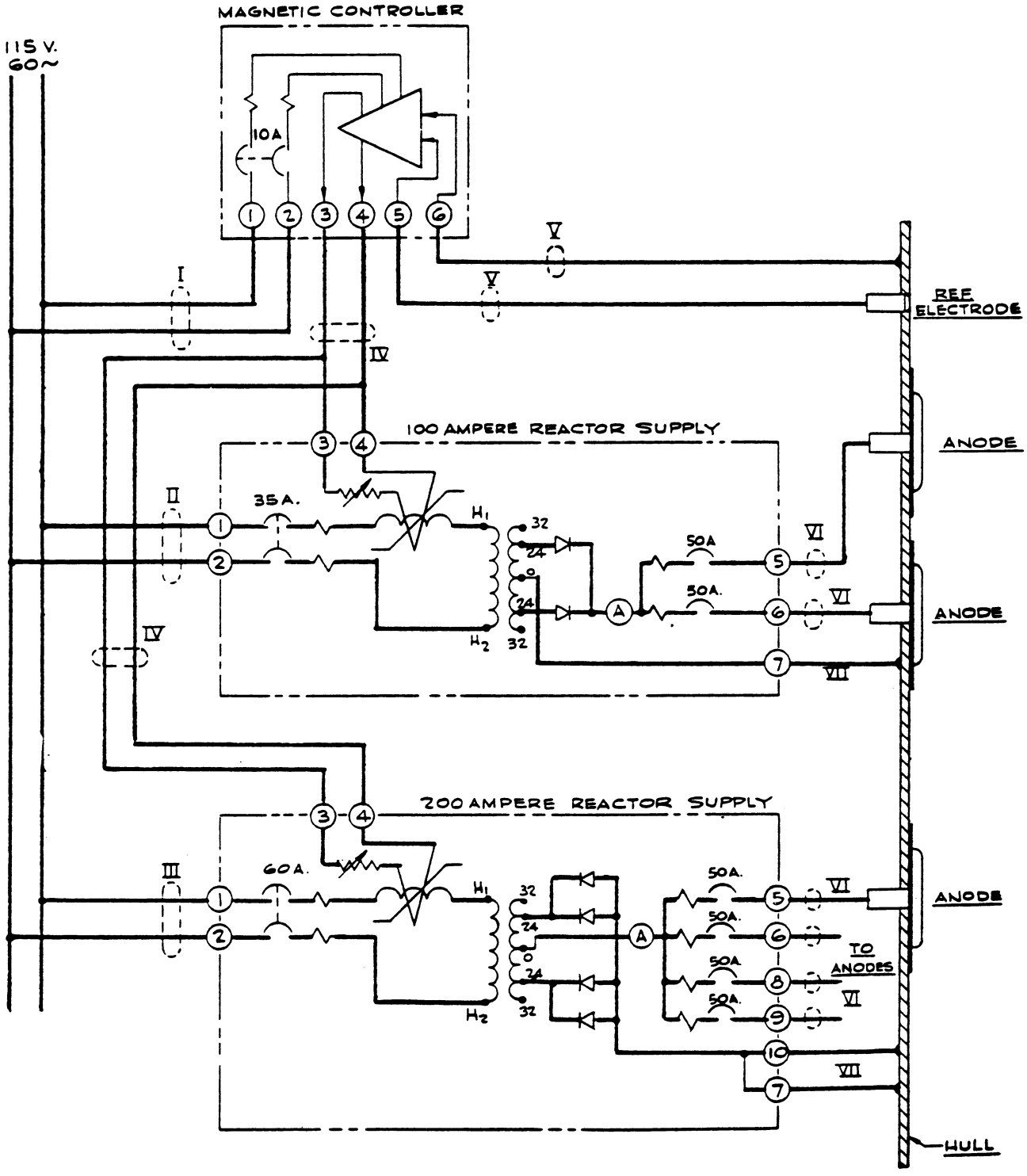

(COURTESY OF ENGLEHARD)

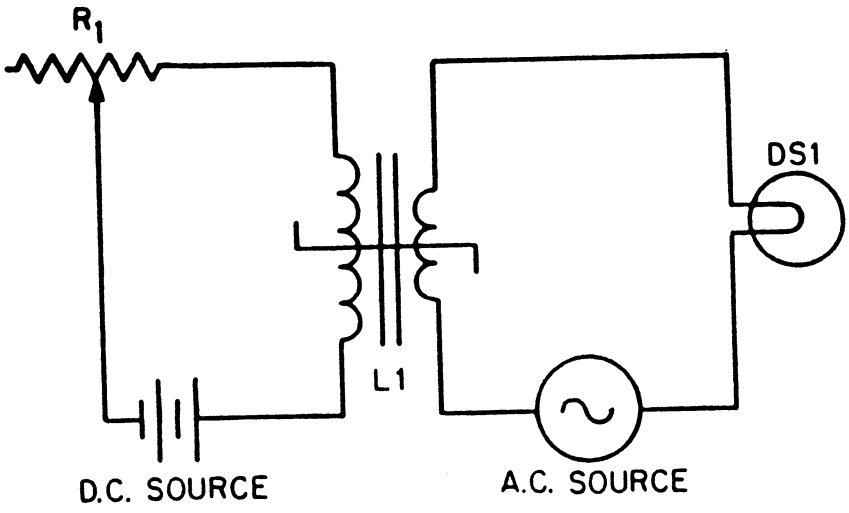
R1
DS1
L1
D.C. SOURCE
A.C. SOURCE

A

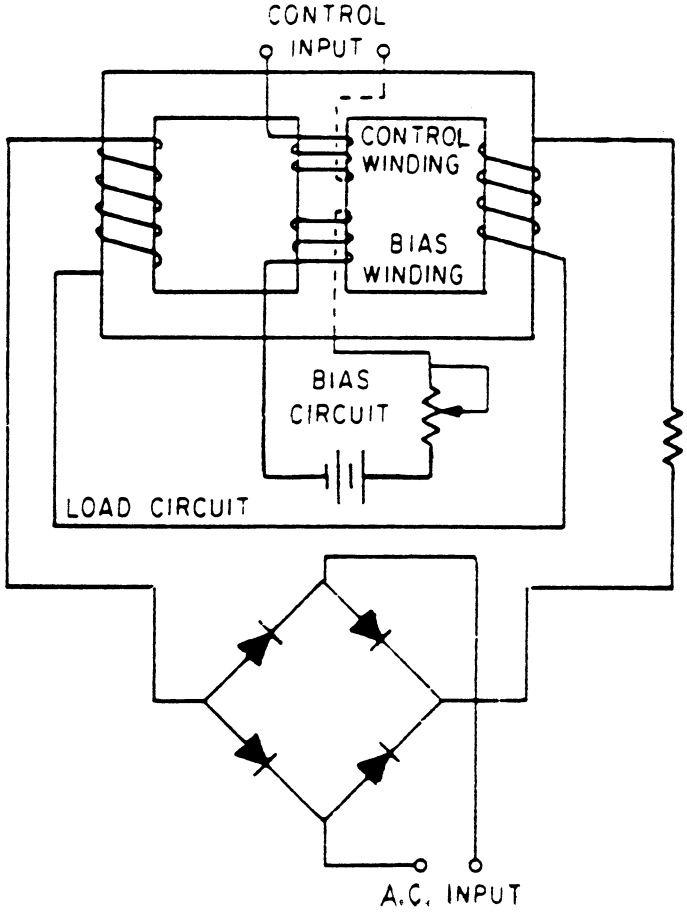
CONTROL
INPUT
CONTROL
WINDING
BIAS
WINDING
BIAS
CIRCUIT
LOAD CIRCUIT
A.C. INPUT

B