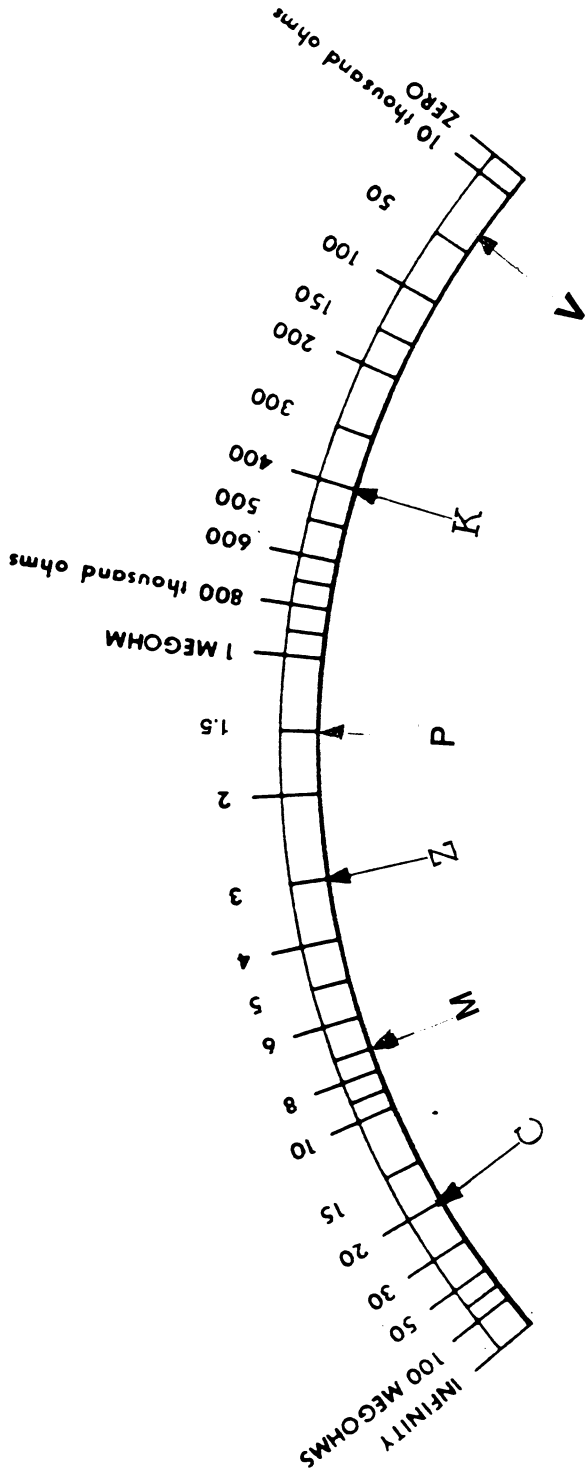
INFINITY
100 MEGOHMS
50
30
20
15
10
8
6
5
4
3
2
1.5
1 MEGOHM
800 thousand ohms
600
500
400
300
200
150
100
50
10 thousand ohms
ZERO
C
M
Z
P
K
V

EL-0045

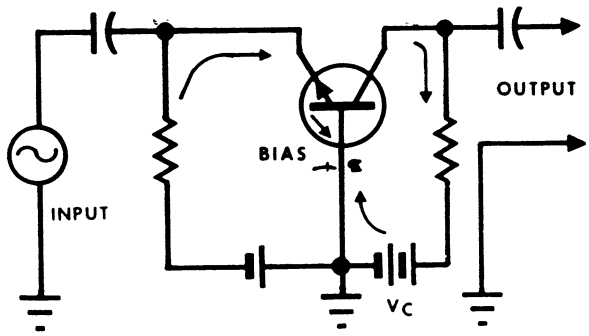

EL-0046

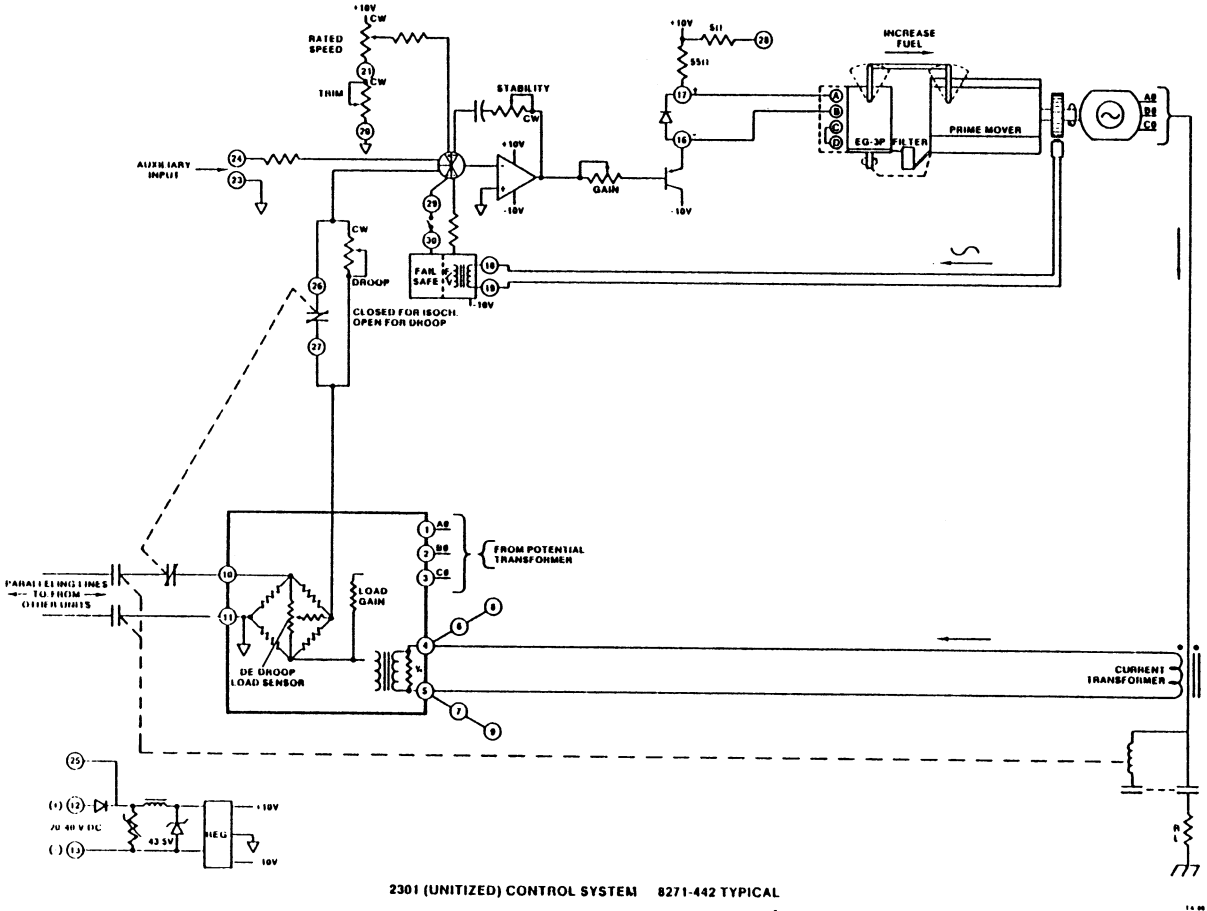

2301 (UNITIZED) CONTROL SYSTEM 8271-442 TYPICAL

(Courtesy of Woodward)

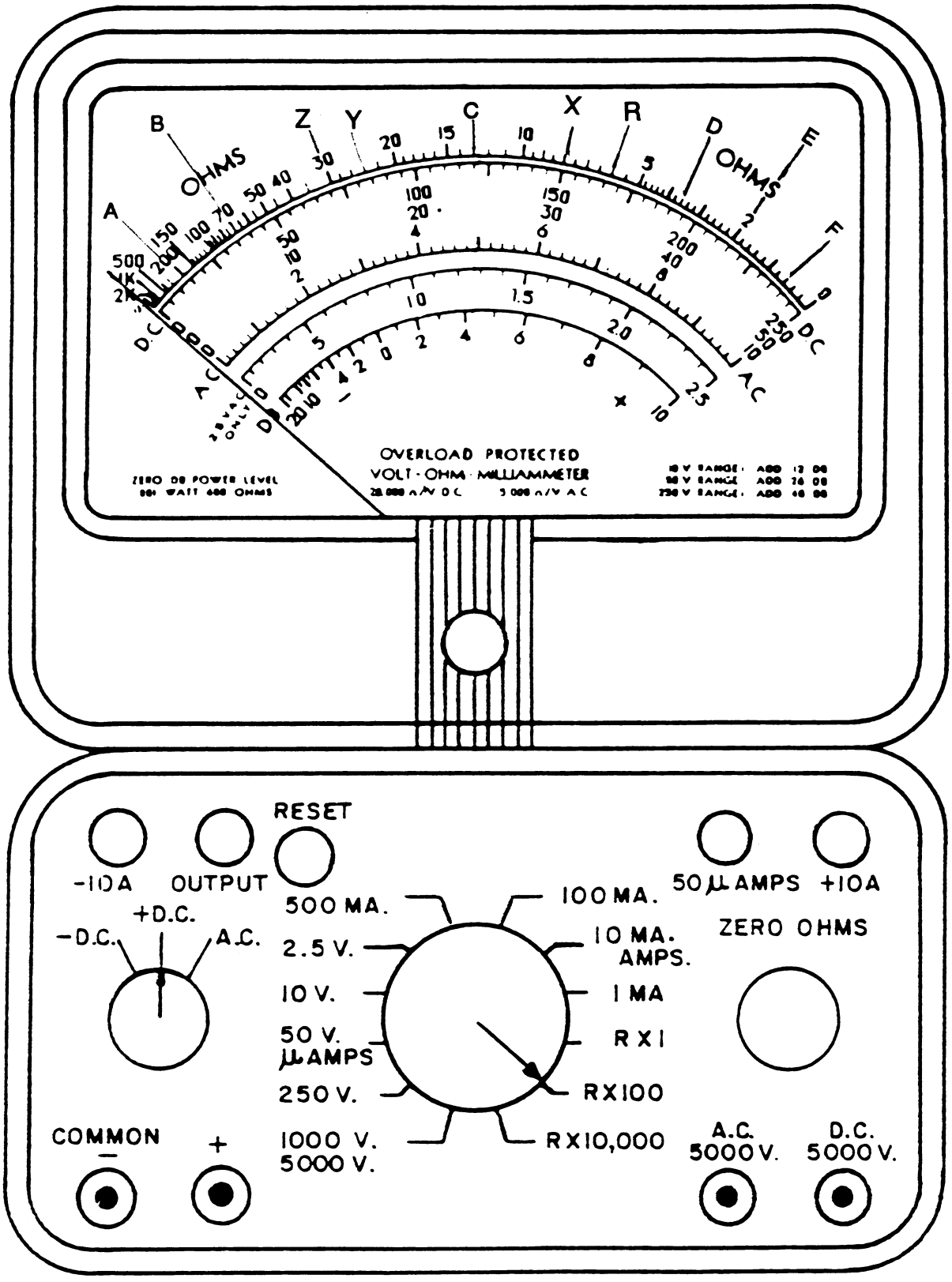
OVERLOAD PROTECTED
VOLT · OHM · MILLIAMMETER
RESET
-10A
OUTPUT
+D.C.
-D.C.
A.C.
500 MA.
2.5 V.
10 V.
50 V.
µAMPS
250 V.
1000 V.
5000 V.
100 MA.
10 MA.
AMPS.
1 MA
RX1
RX100
RX10,000
50µAMPS
+10A
ZERO OHMS
COMMON
A.C.
5000 V.
D.C.
5000 V.

EL-0048

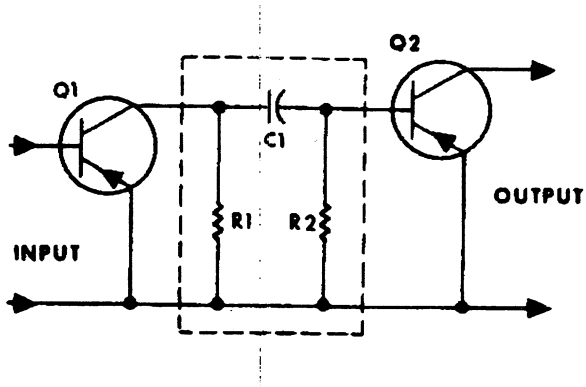

EL-0049

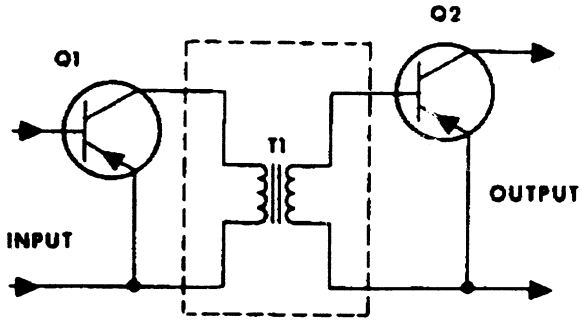

EL-0050

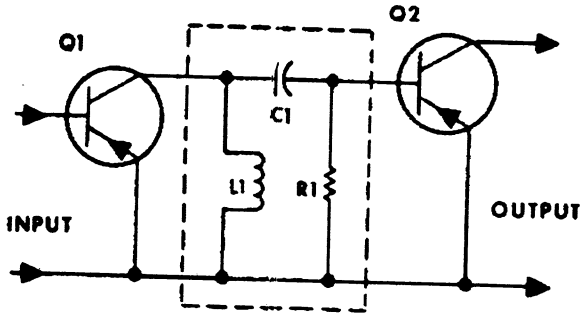

EL-0051

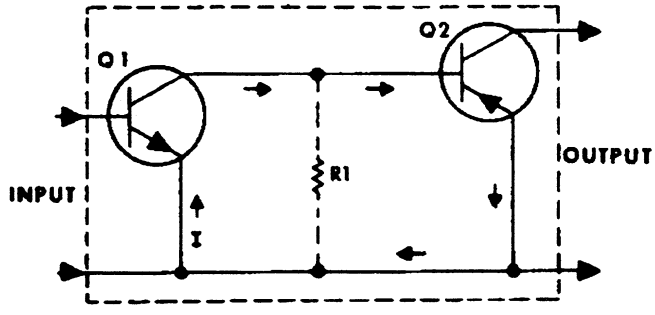

EL-0052

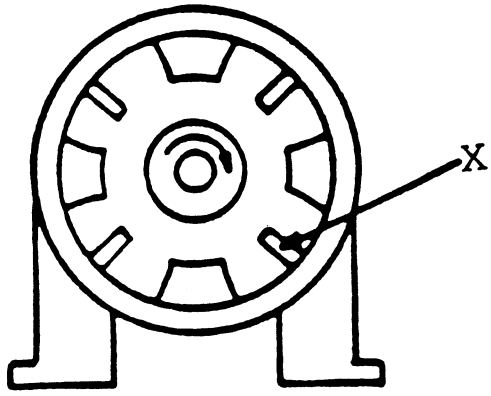

EL-0053

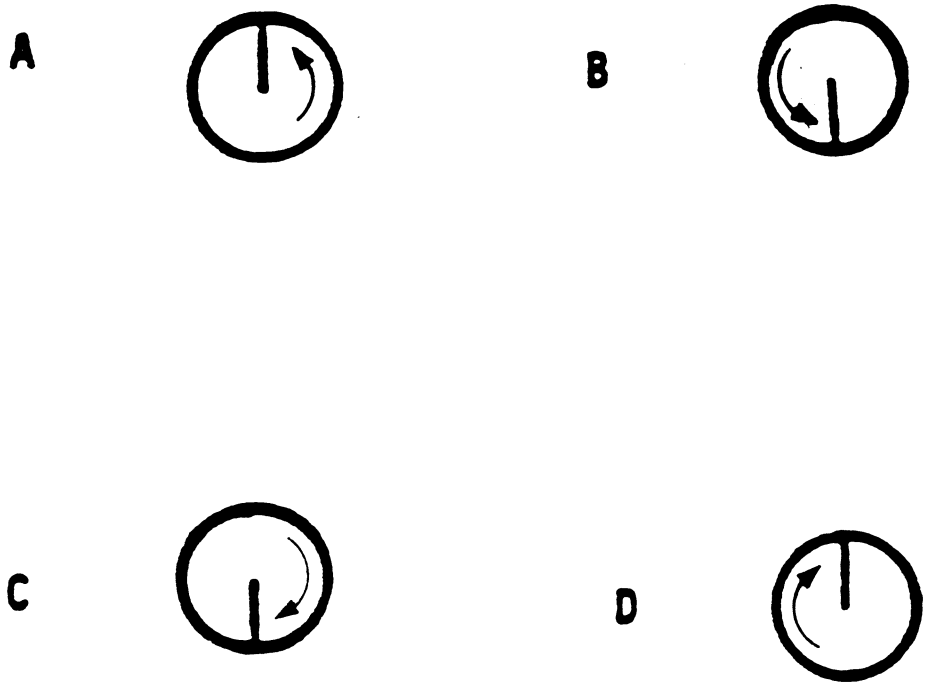

EL-0054

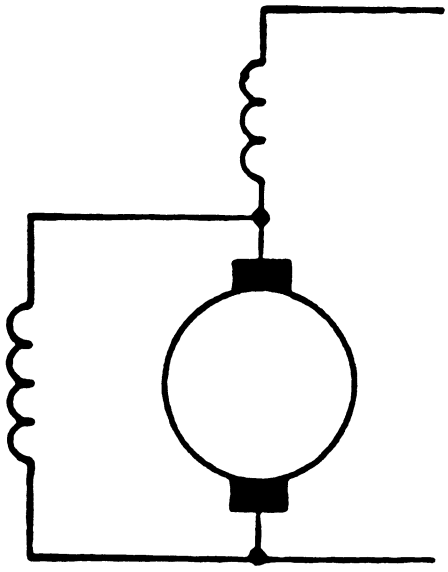

EL-0055

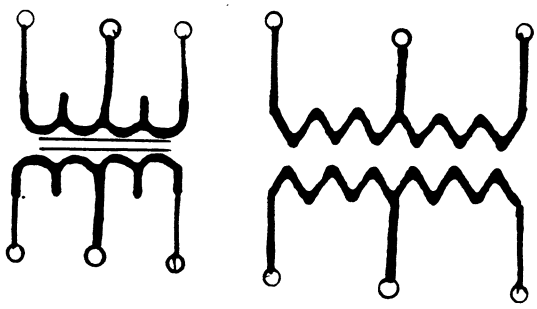

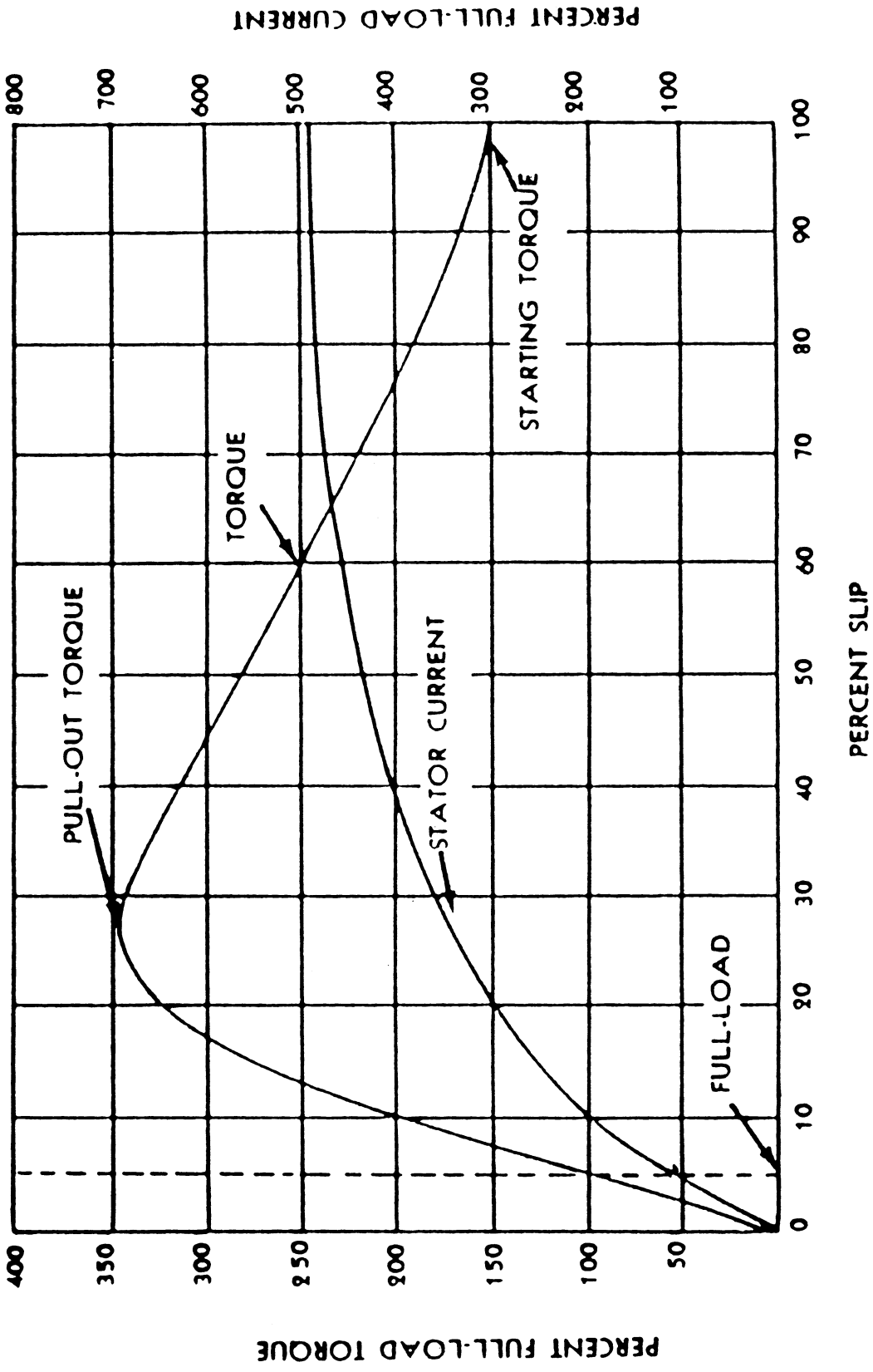

TORQUE AND CURRENT CURVES

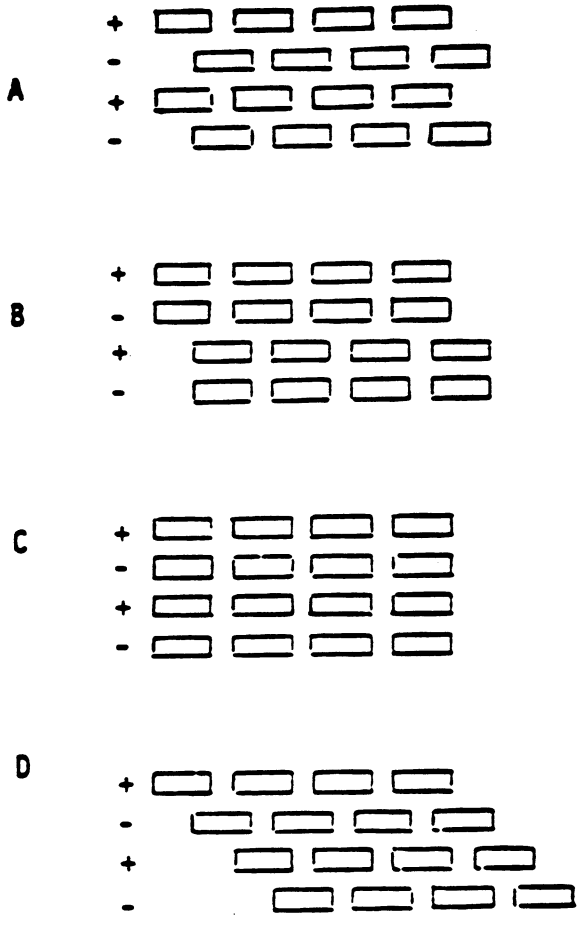
A
B
C
D

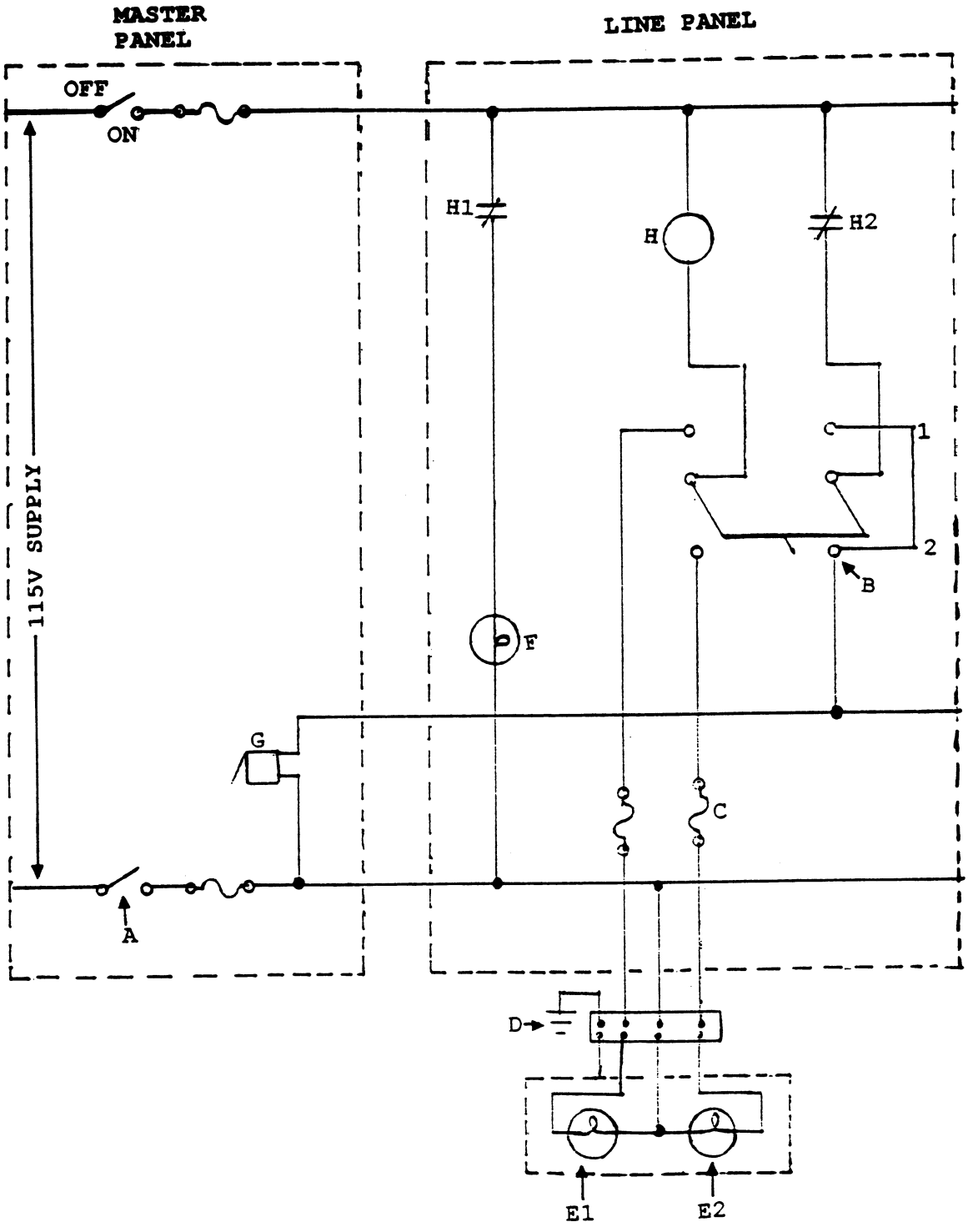
MASTER PANEL
LINE PANEL
OFF
ON
115V SUPPLY
H1
H
H2
1
2
B
F
G
C
A
D
E1
E2

EL-0059

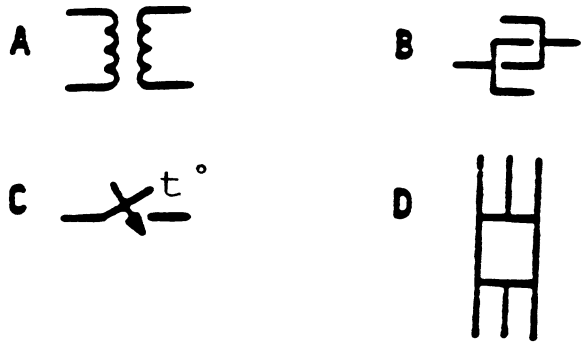

EL-0060

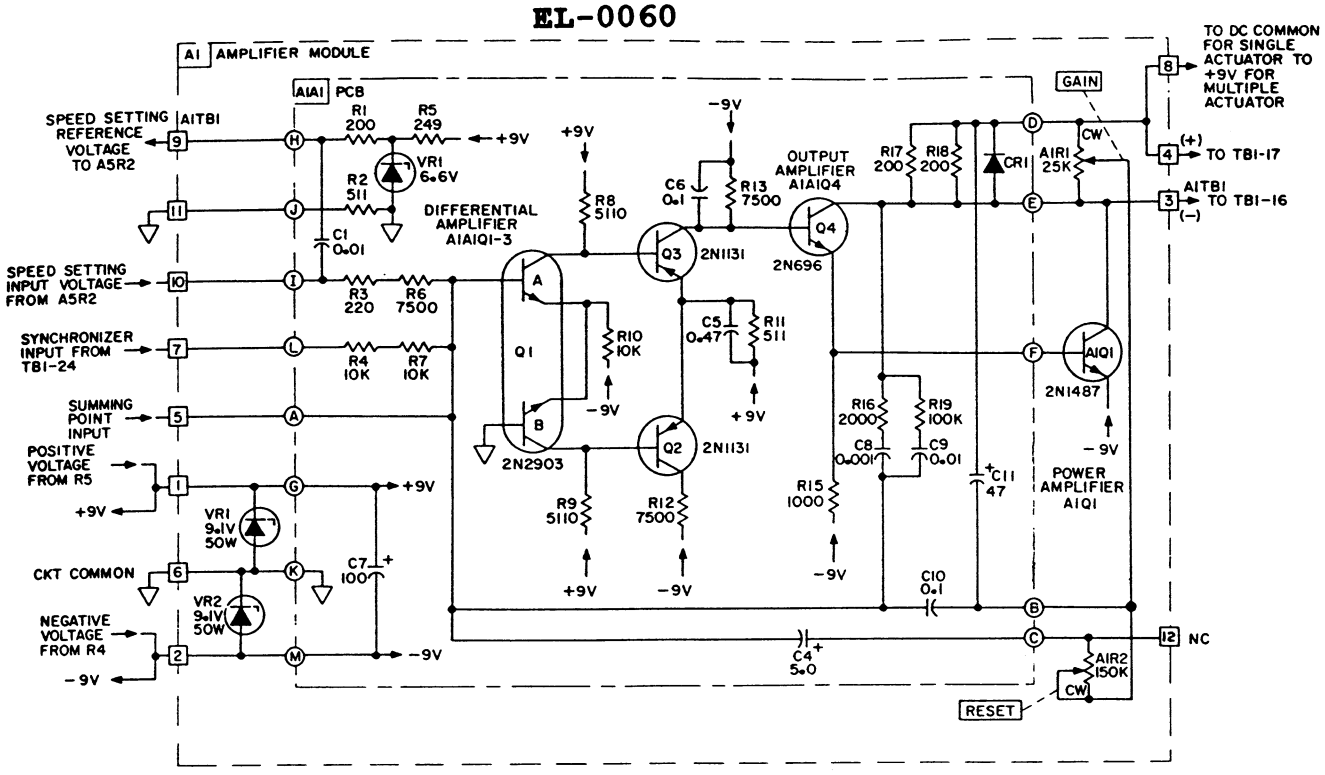

(Courtesy of Woodward)

EL-0061

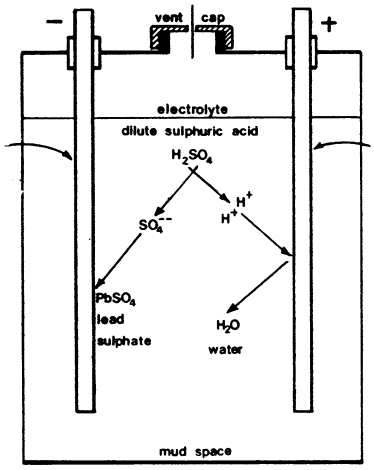

EL-0062

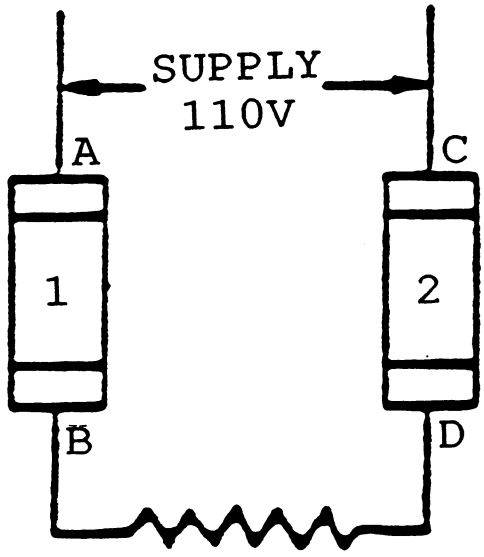

EL-0063

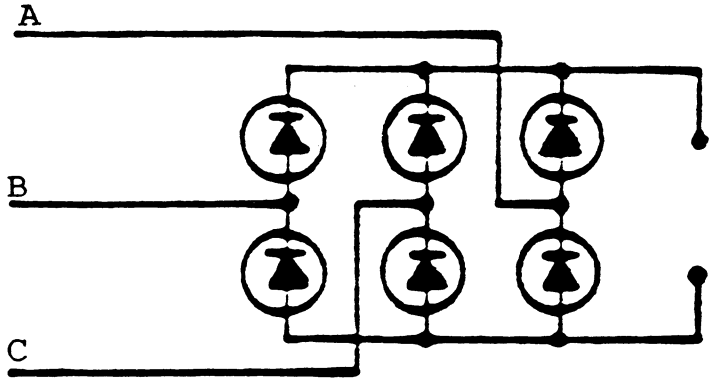

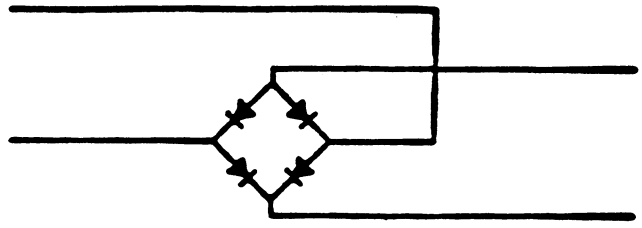

A

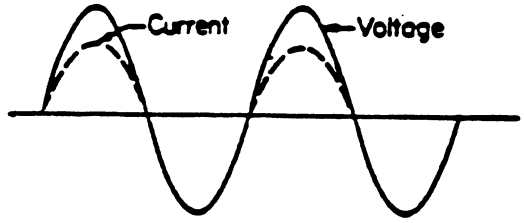
Current
Voltage

B

Voltage
Current

C

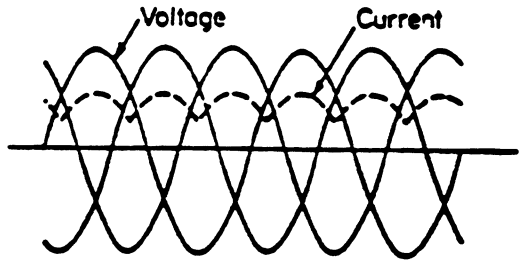
Voltage
Current

D

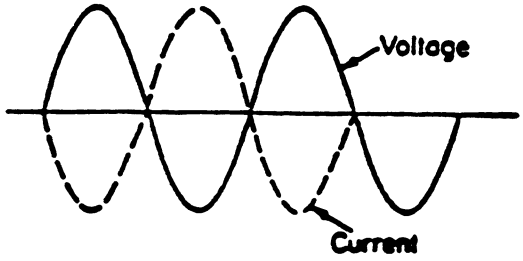
Voltage
Current

EL-0065

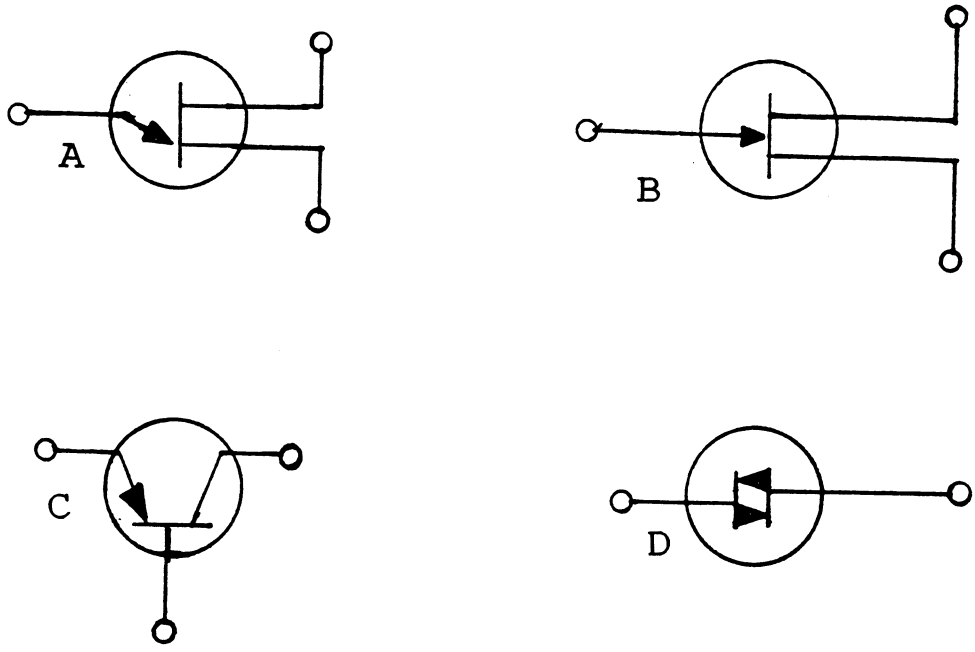

EL-0066

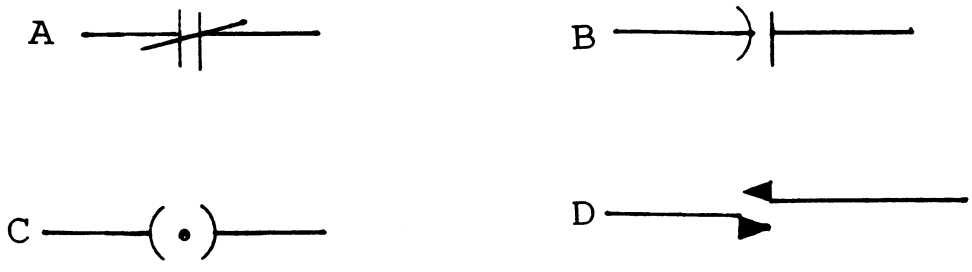

EL-0067

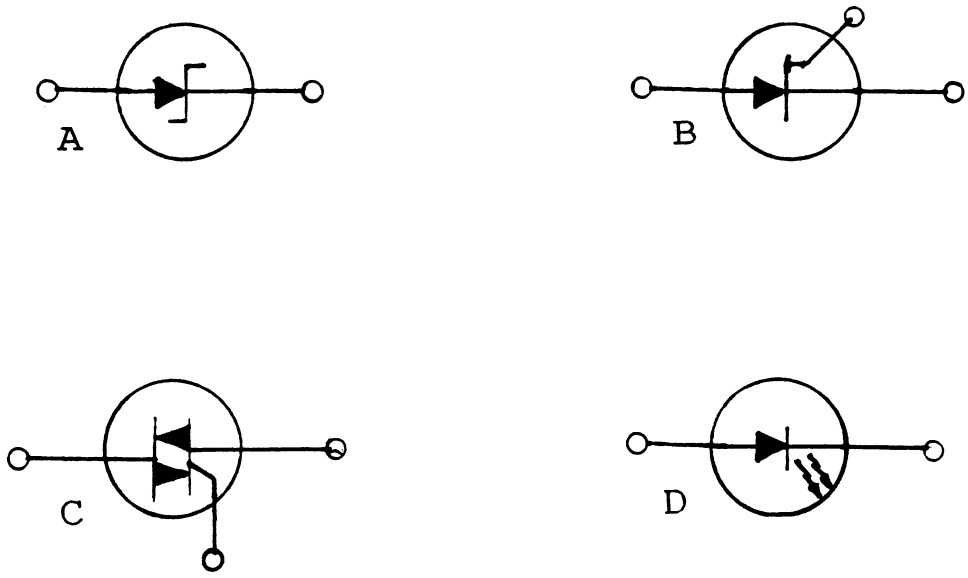
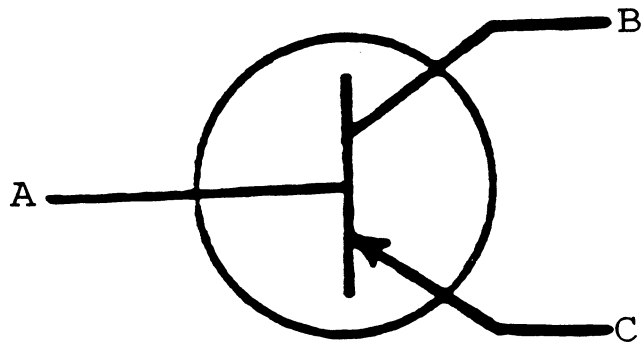
EL-0068