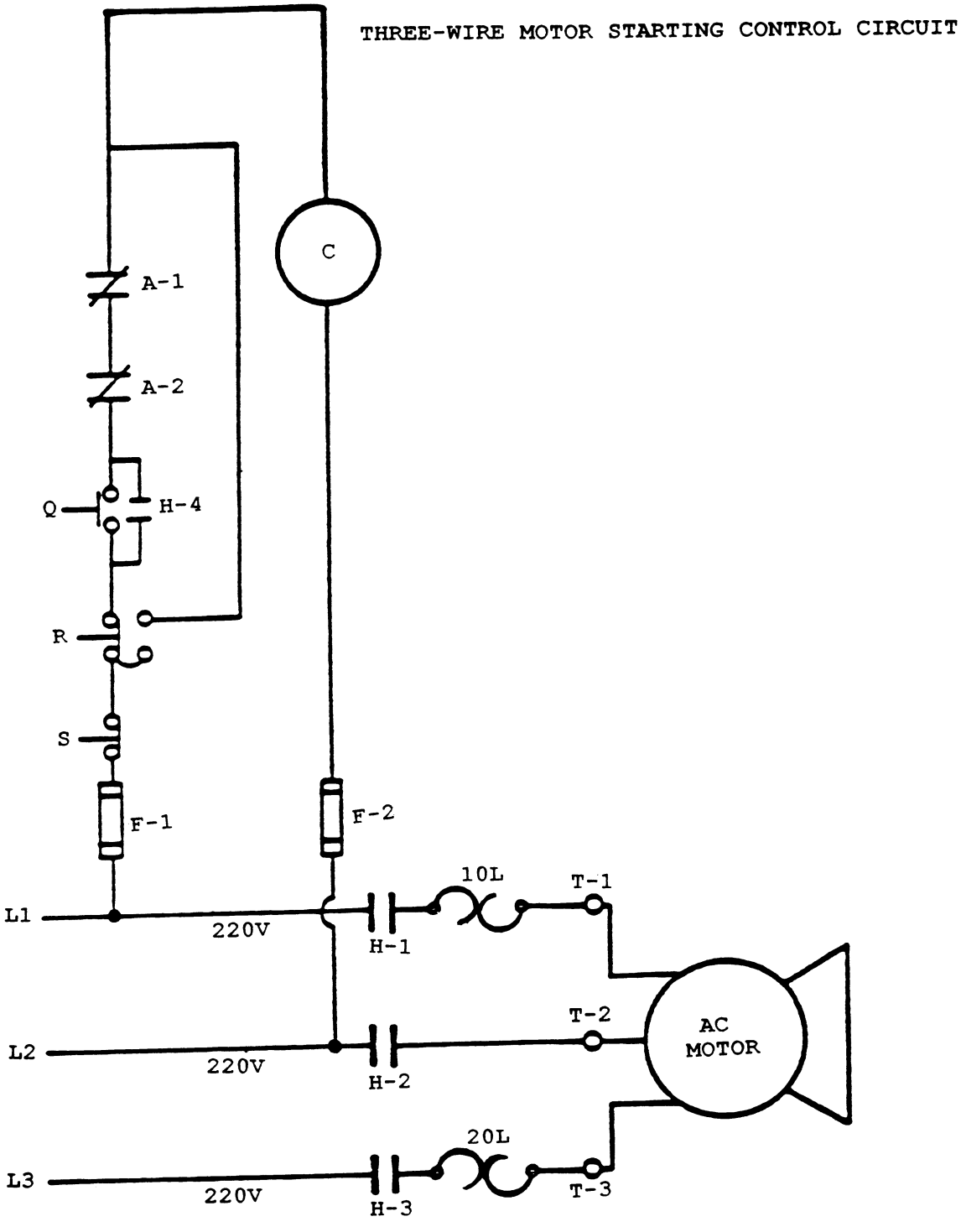
THREE-WIRE MOTOR STARTING CONTROL CIRCUIT
C
A-1
A-2
Q
H-4
R
S
F-1
F-2
L1
220V
H-1
10L
T-1
L2
220V
H-2
T-2
AC
MOTOR
L3
220V
H-3
20L
T-3

EL-0018

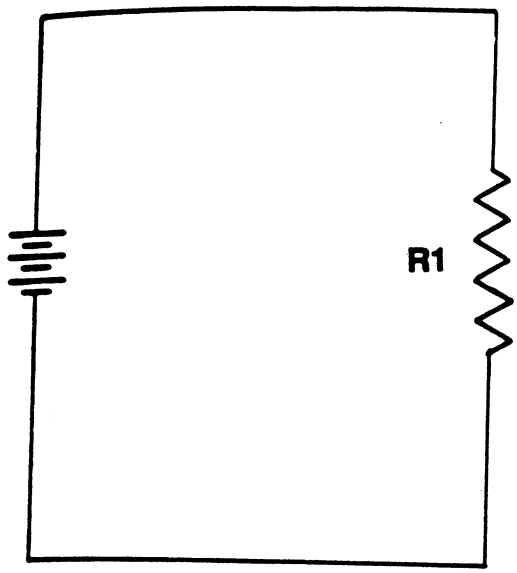

EL-0019

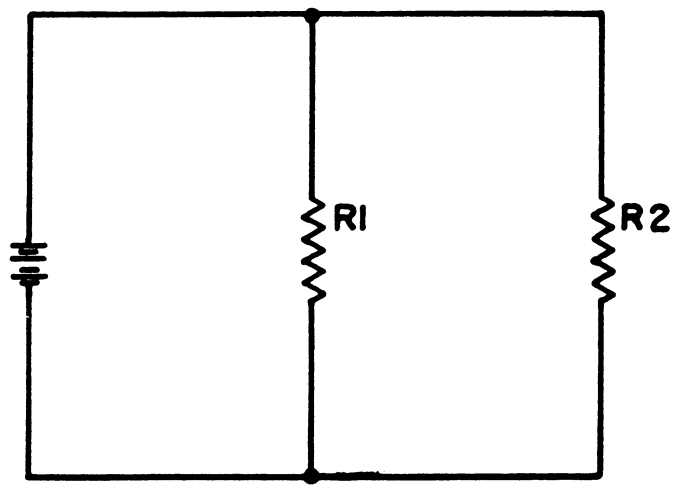

EL-0020

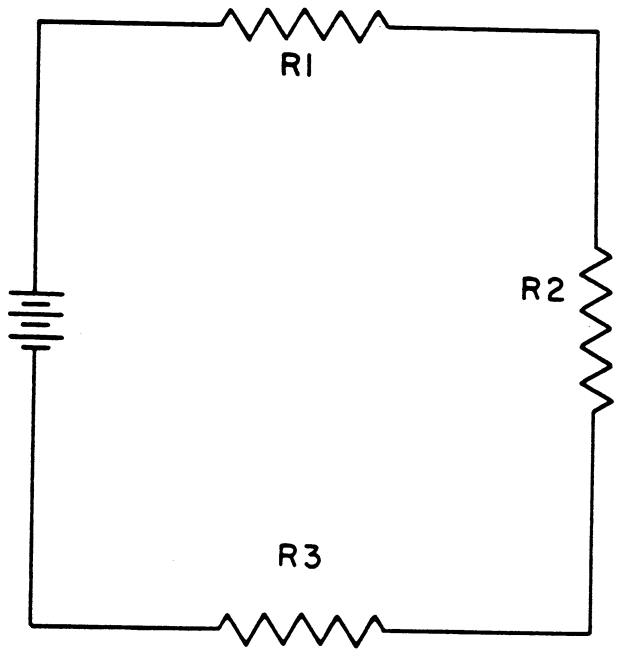

EL-0021

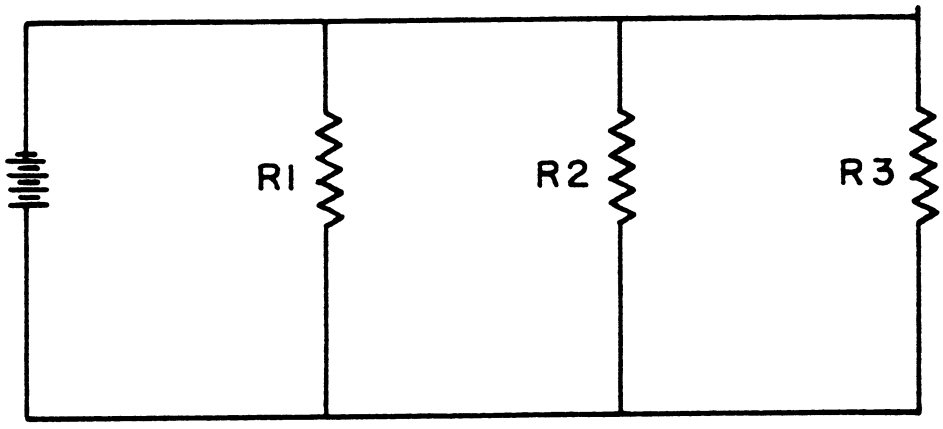

EL-0022

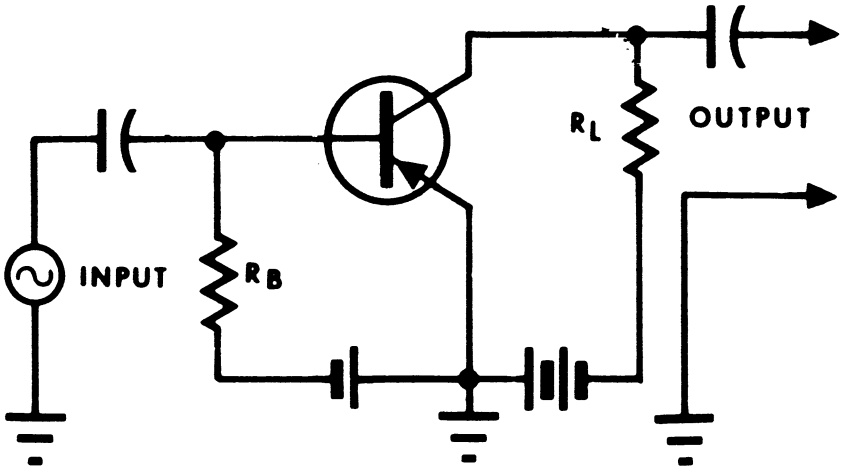

EL-0023

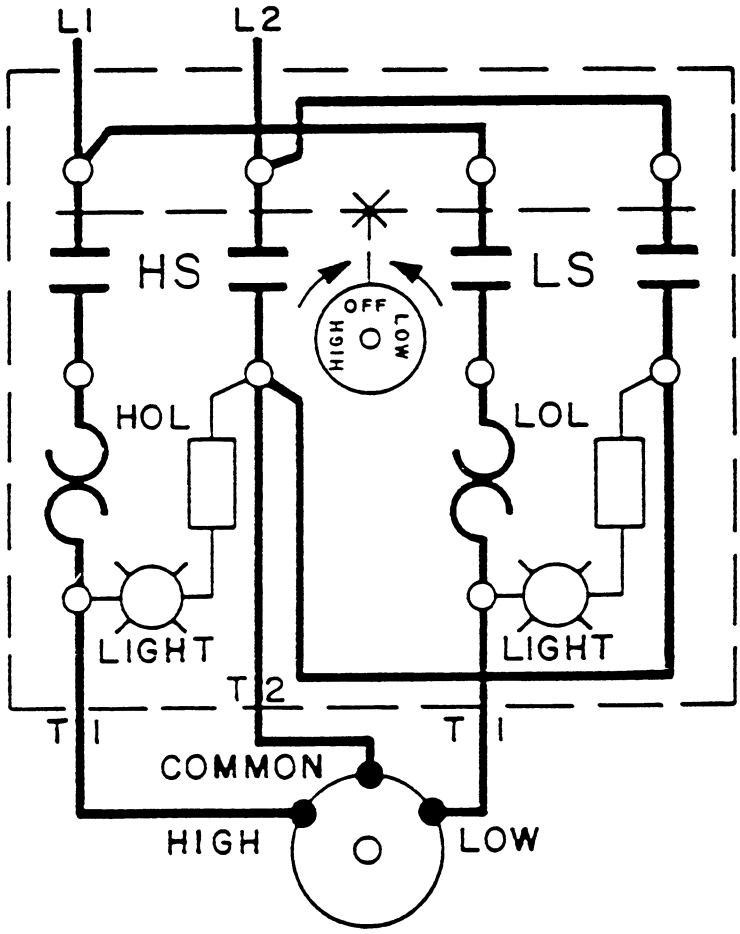

EL-0024

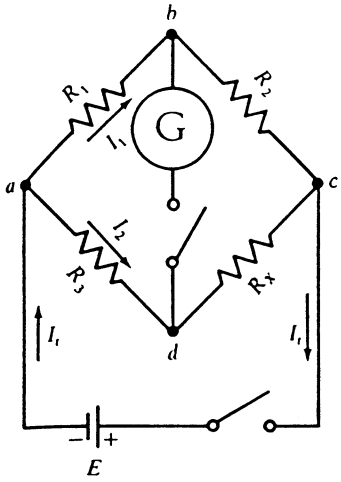

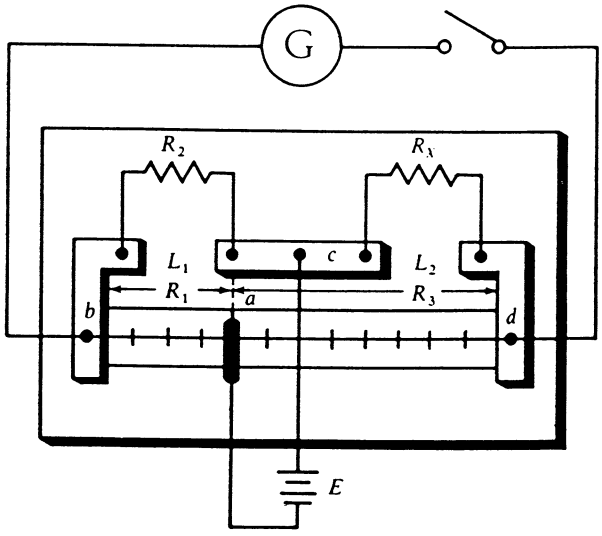

(b)

EL-0025

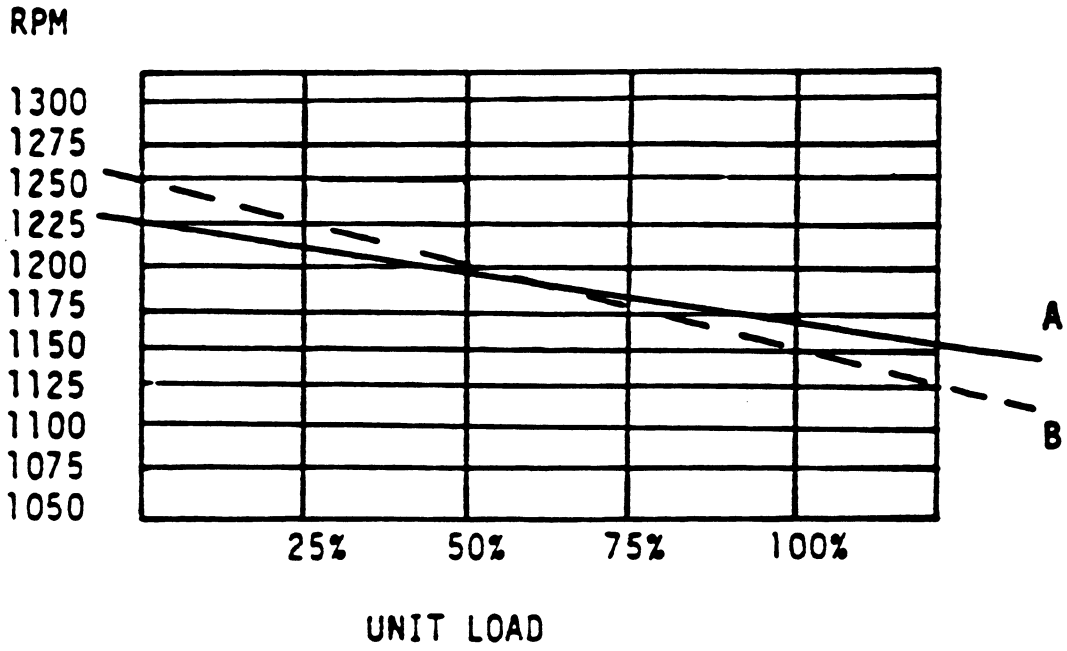

EL-0026

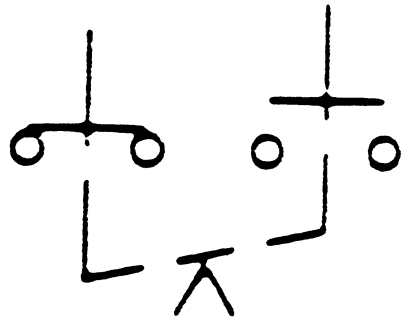

EL-0027

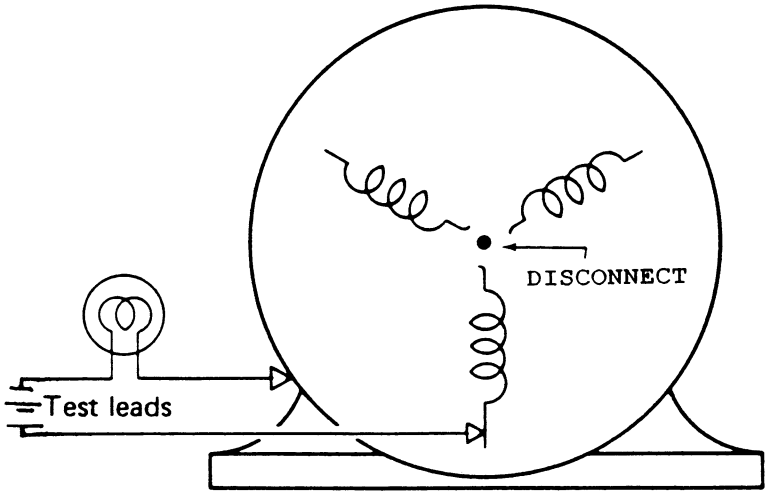

A

EL-0028

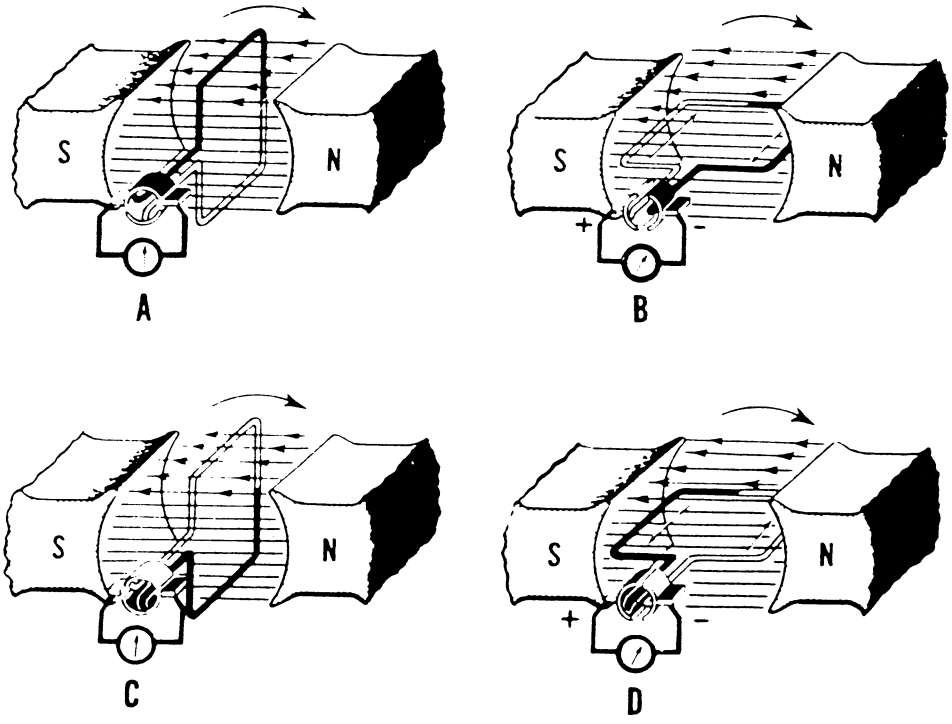

EL-0029

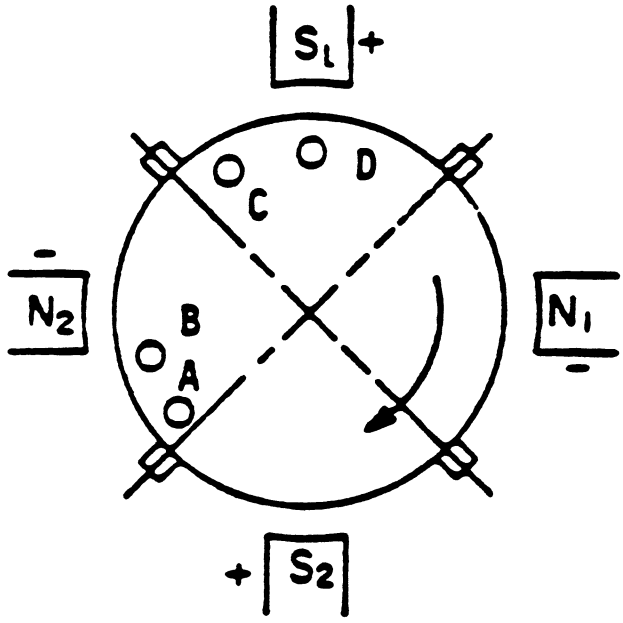

EL-0030

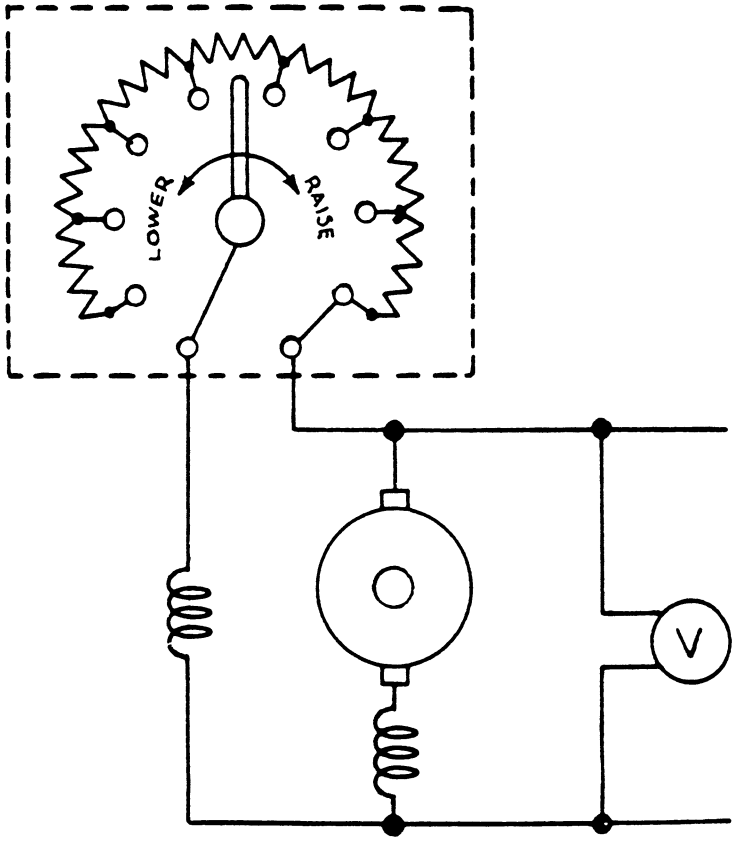

EL-0031

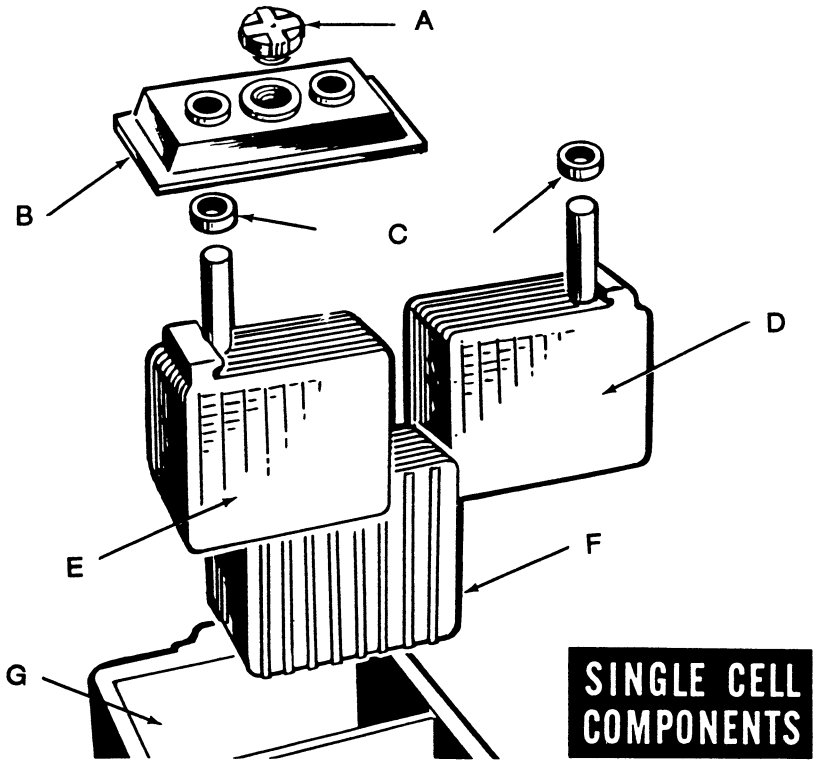

EL-0032

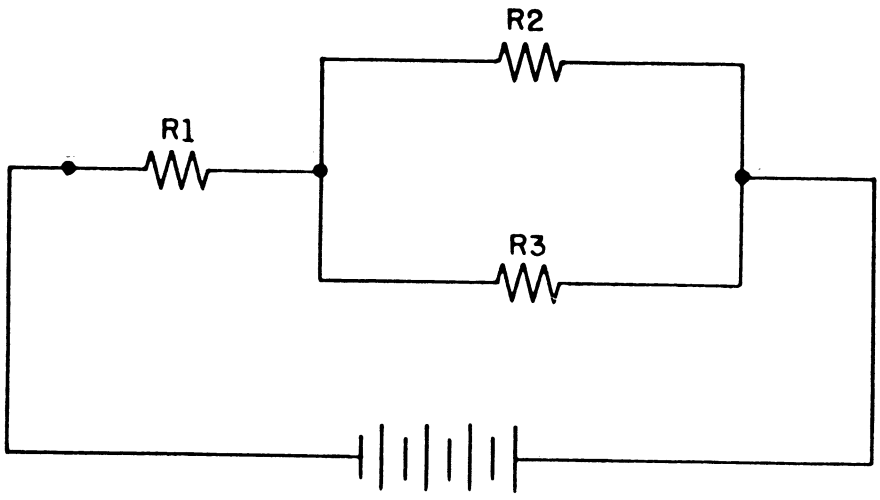

EL-0033

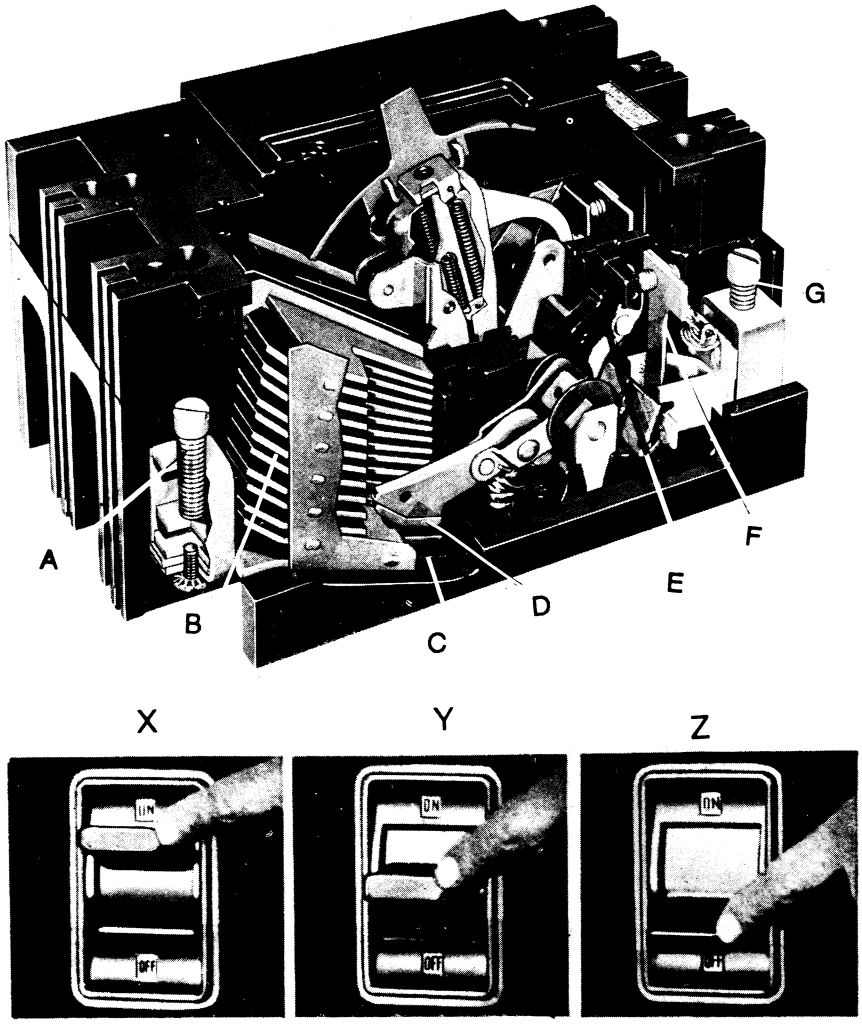

EL-0034

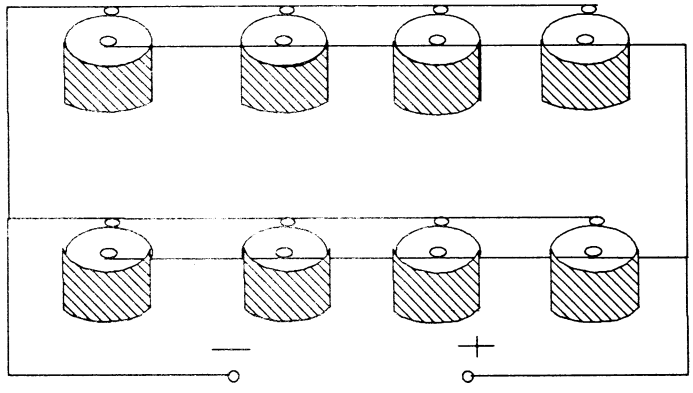

EL-0035

FUNCTION	SYMBOL	TRUTH TABLE INPUTS	
		A	B
AND	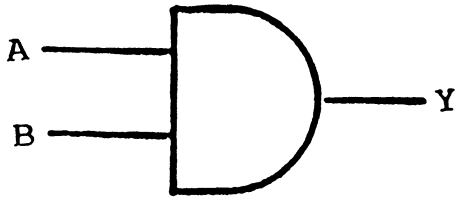	1	1
		1	0
		0	1
		0	0

EL-0036

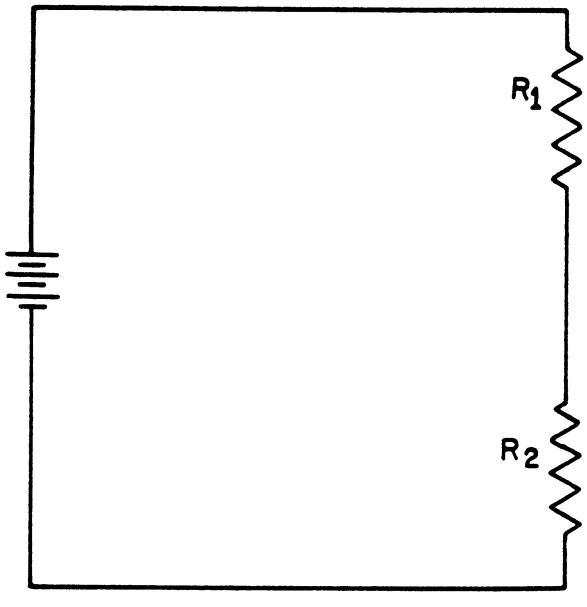

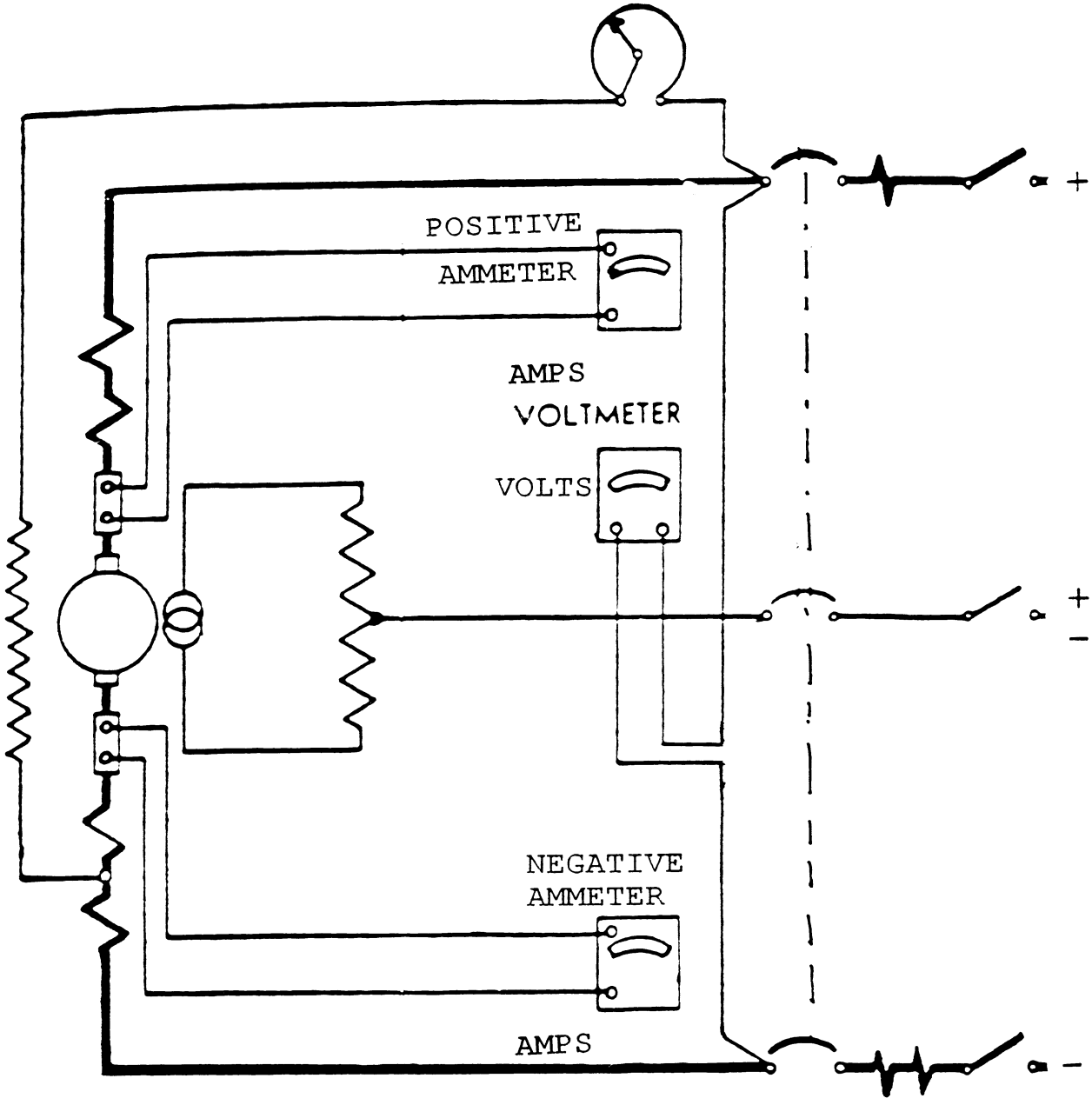
POSITIVE
AMMETER
AMPS
VOLTMETER
VOLTS
NEGATIVE
AMMETER
AMPS
+
+
−
−

EL-0038

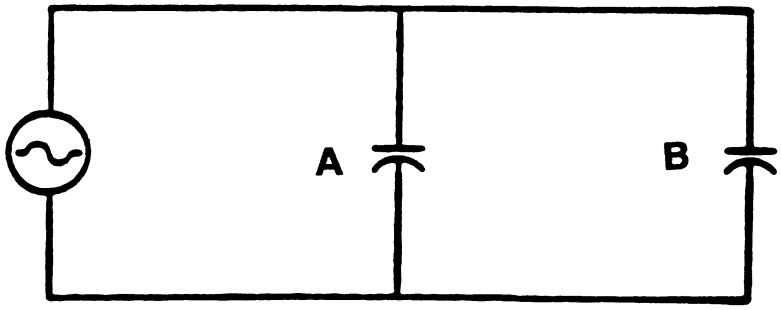

EL-0039

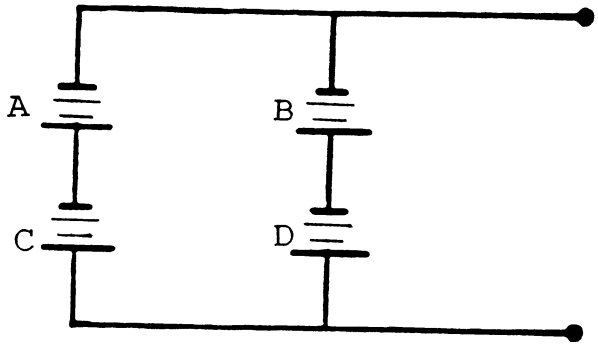

EL-0040

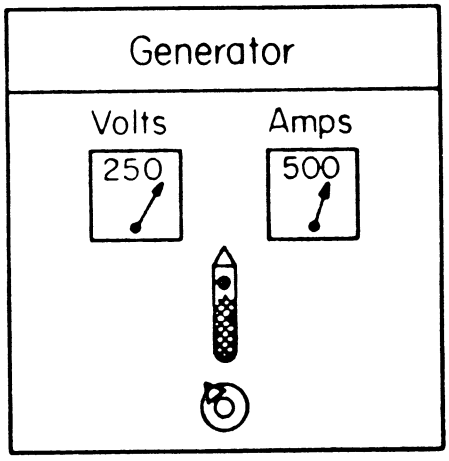

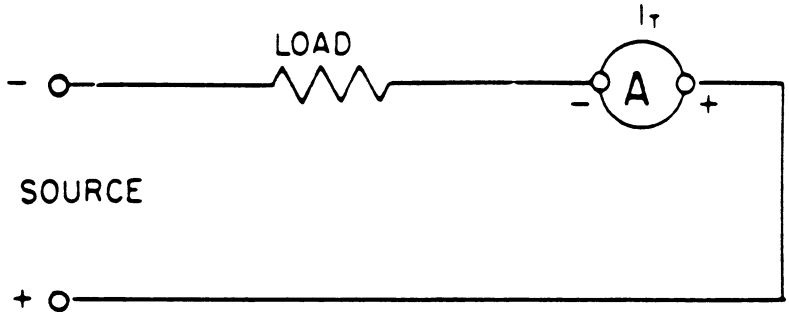

(A) SERIES CIRCUIT

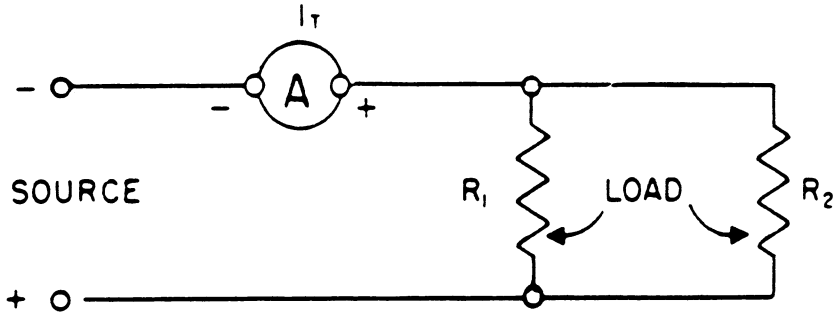

(B) PARALLEL CIRCUIT

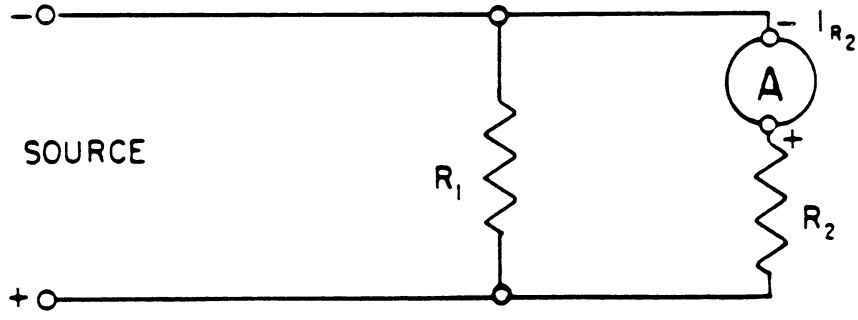

(C) PARALLEL CIRCUIT

EL-0042

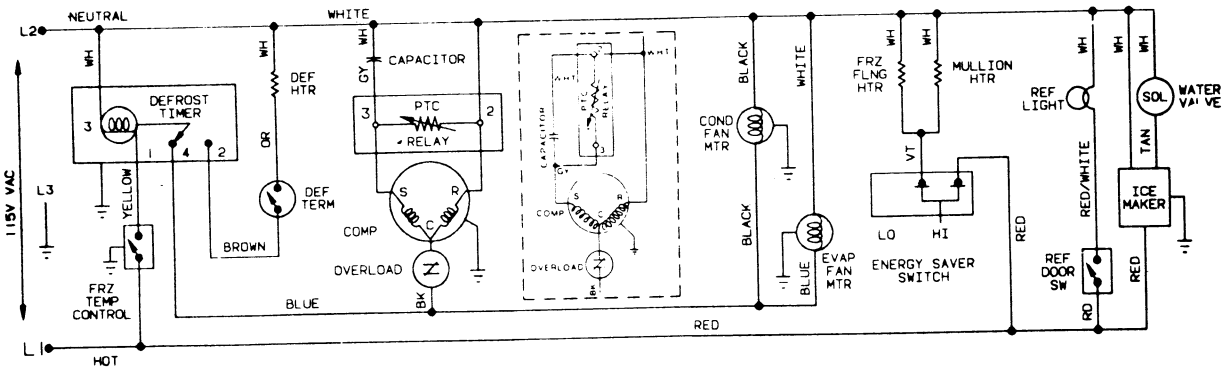
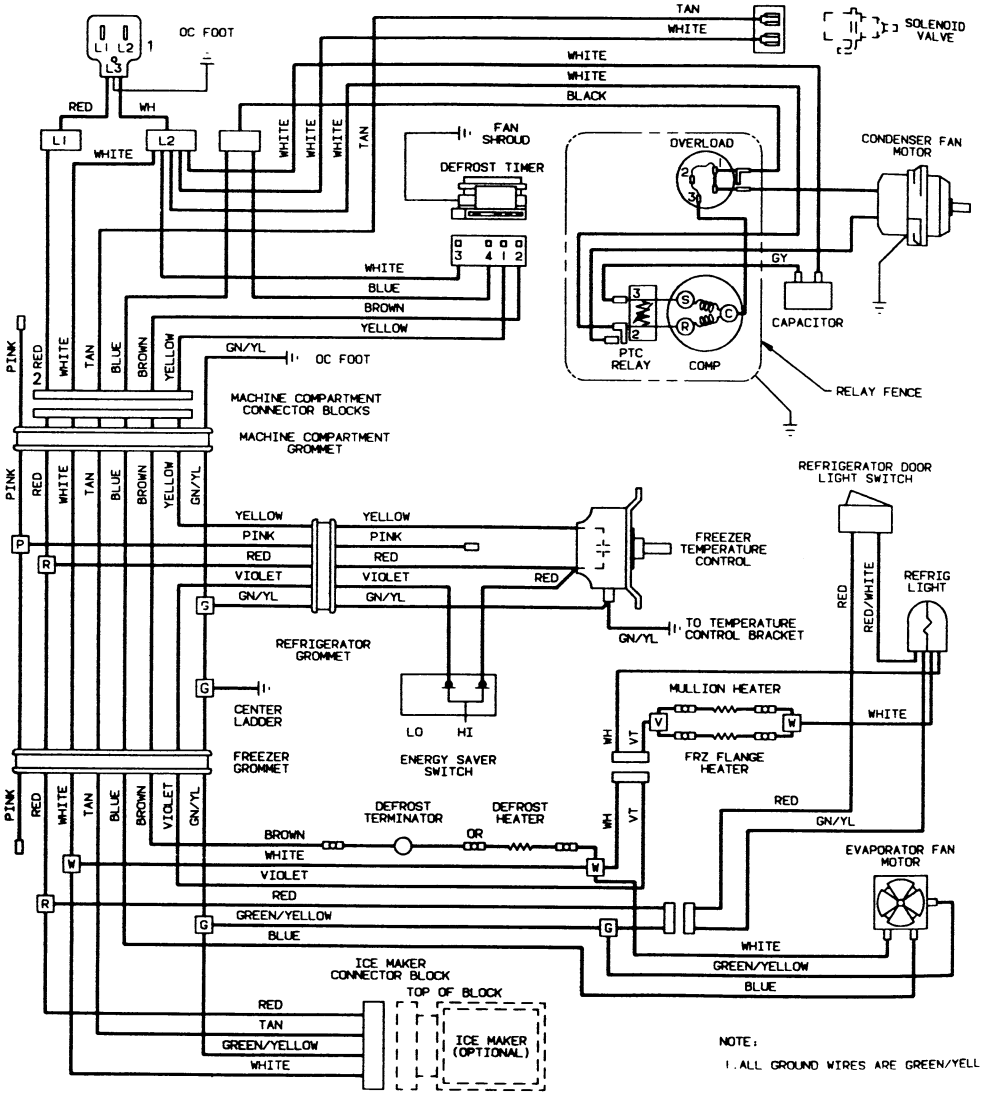
EL-0043