EL-0001

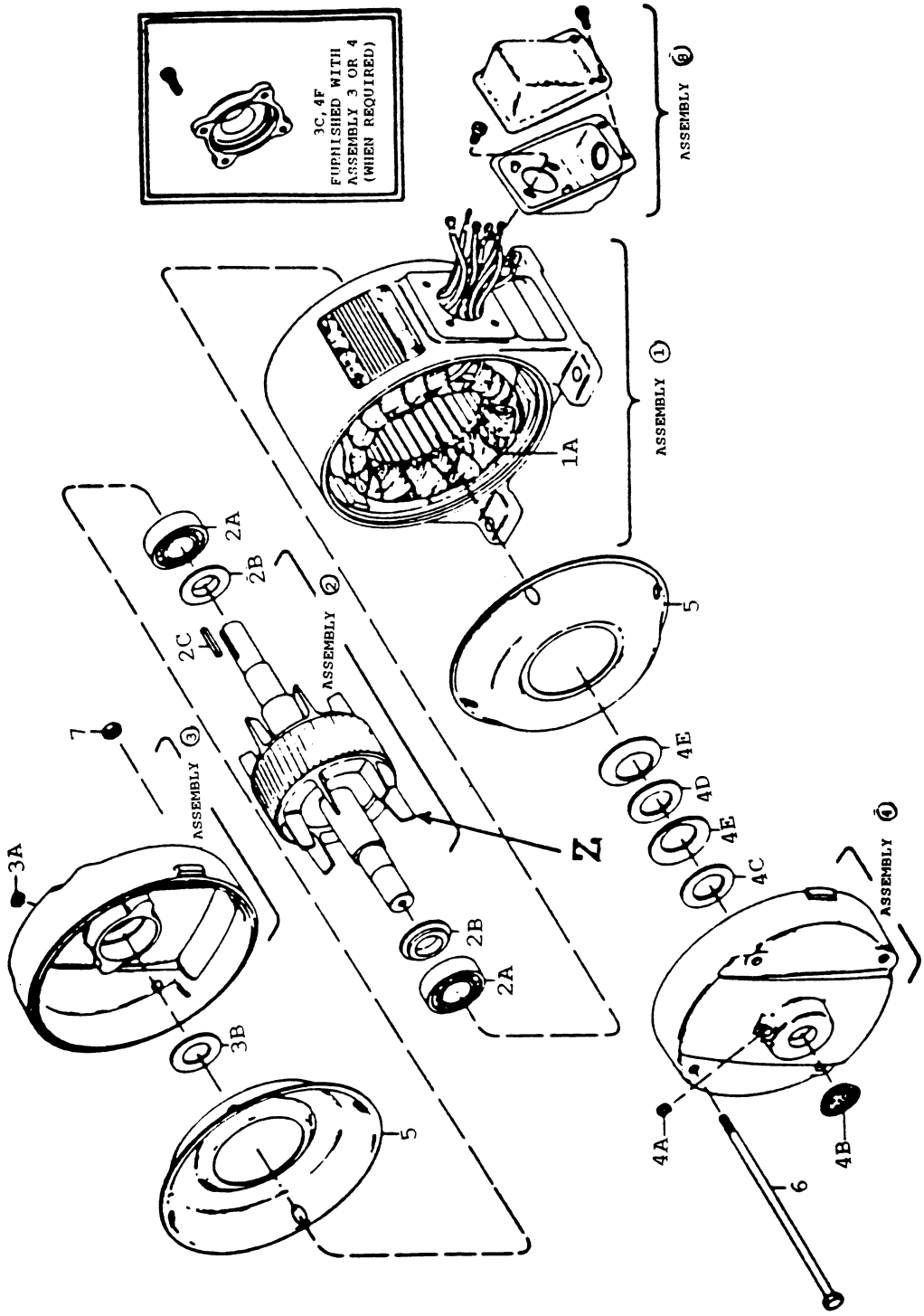
3C, 4F
FURNISHED WITH
ASSEMBLY 3 OR 4
(WHEN REQUIRED)
ASSEMBLY ⑥
ASSEMBLY ①
1A
5
4E
4D
4E
4C
ASSEMBLY ④
4A
4B
6
Z
ASSEMBLY ②
2A
2B
2C
2B
2A
ASSEMBLY ③
7
3A
3B
5

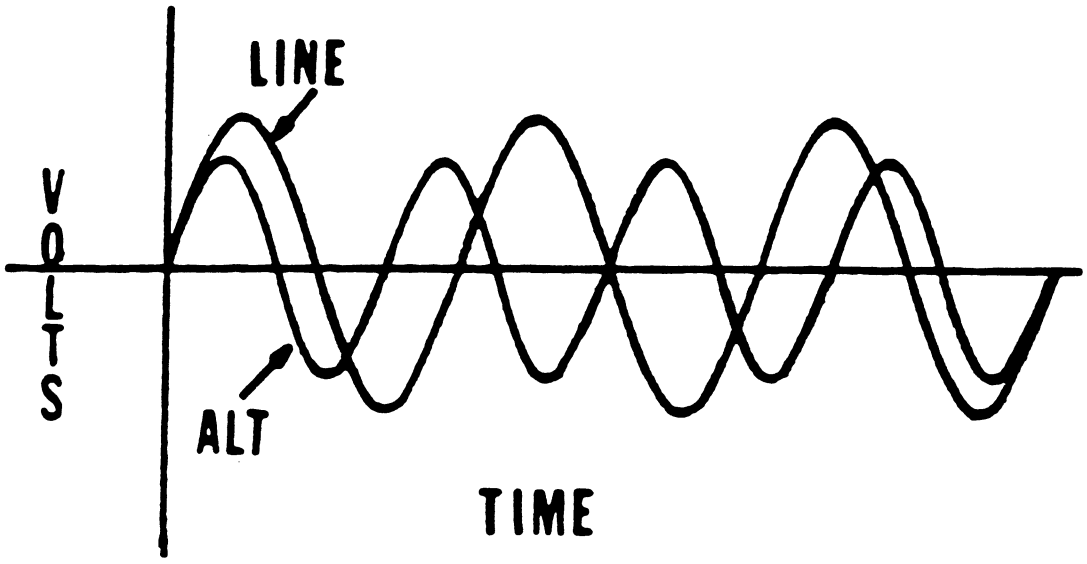
LINE
VOLTS
ALT
TIME

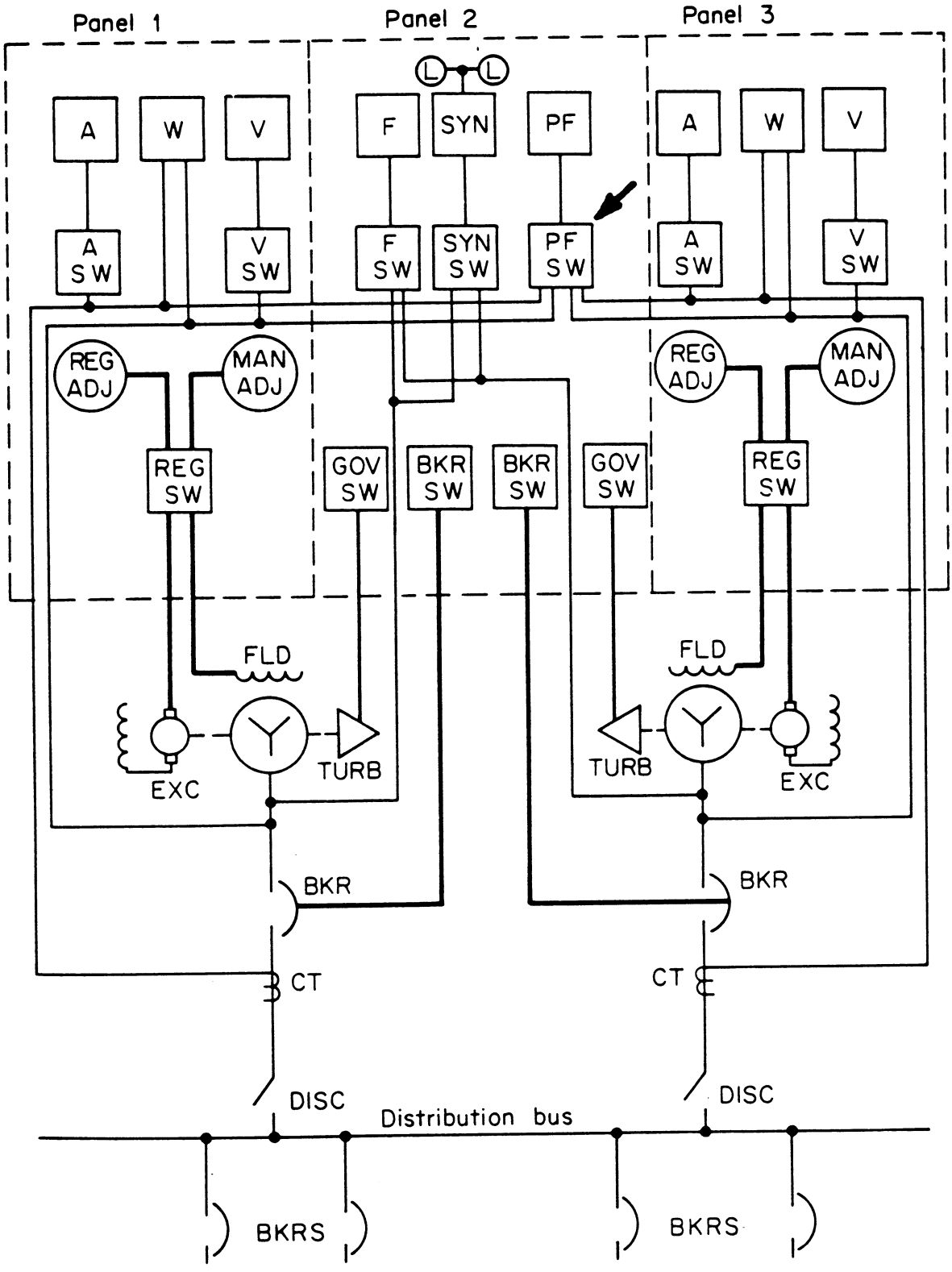
Panel 1
Panel 2
Panel 3
A
W
V
F
SYN
PF
A
W
V
A SW
V SW
F SW
SYN SW
PF SW
A SW
V SW
REG ADJ
MAN ADJ
REG ADJ
MAN ADJ
REG SW
GOV SW
BKR SW
BKR SW
GOV SW
REG SW
FLD
FLD
EXC
TURB
TURB
EXC
BKR
BKR
CT
CT
DISC
DISC
Distribution bus
BKRS
BKRS

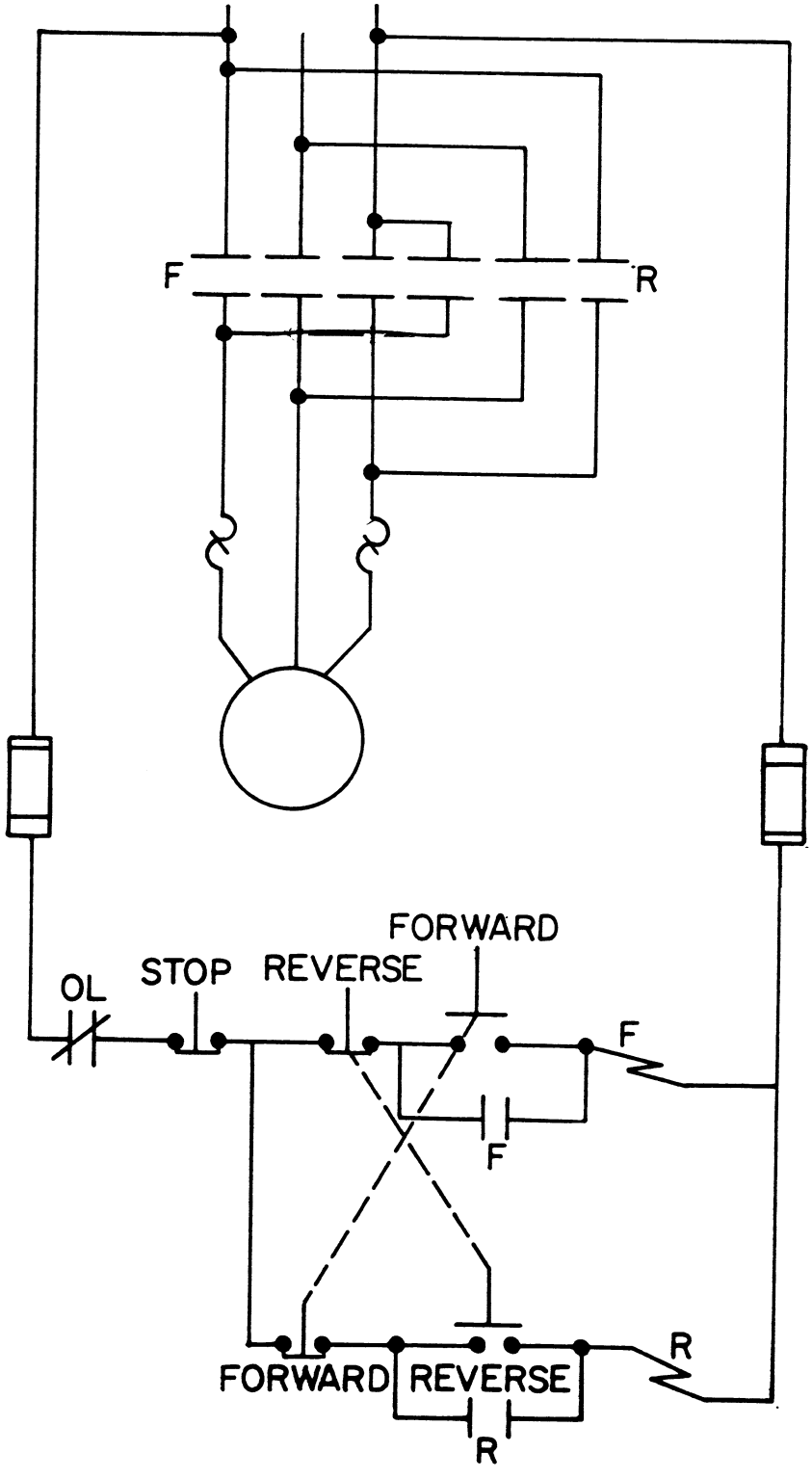
F
R
FORWARD
OL
STOP
REVERSE
F
F
R
FORWARD
REVERSE
R

A

B

C

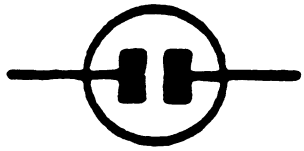

D

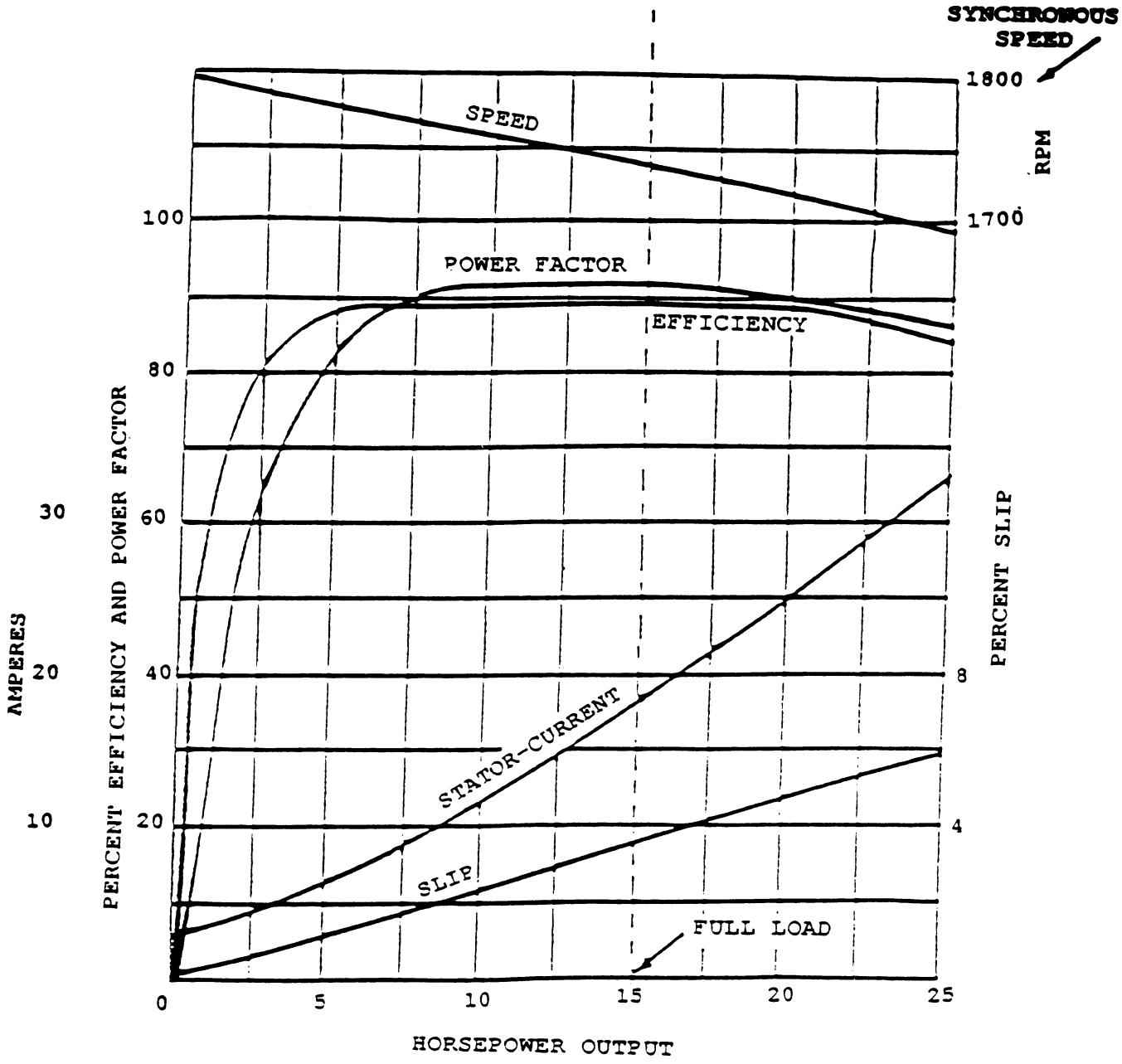

PERFORMANCE CURVES FOR 4-POLE 3-PHASE 440-VOLT 15-HP CAGE-ROTOR MOTOR

EL-0007

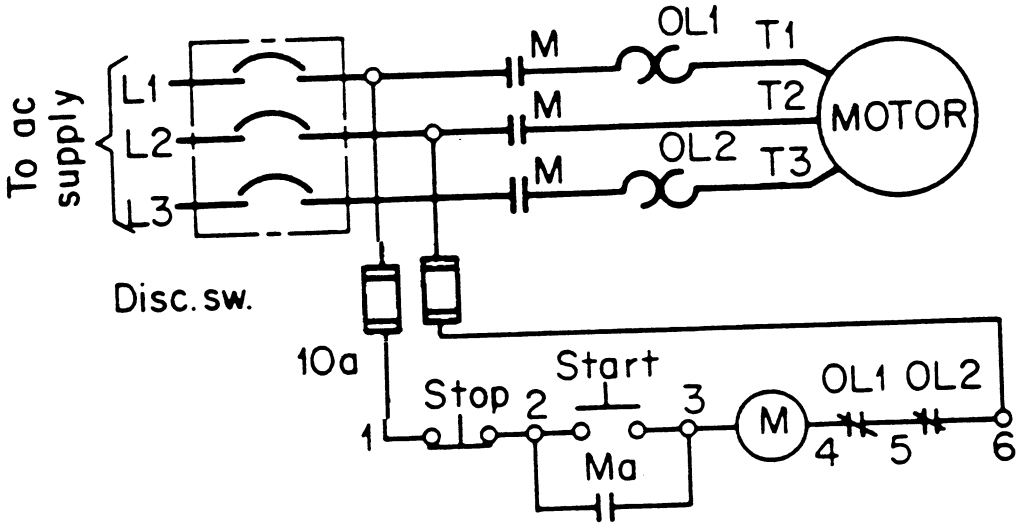

EL-0008

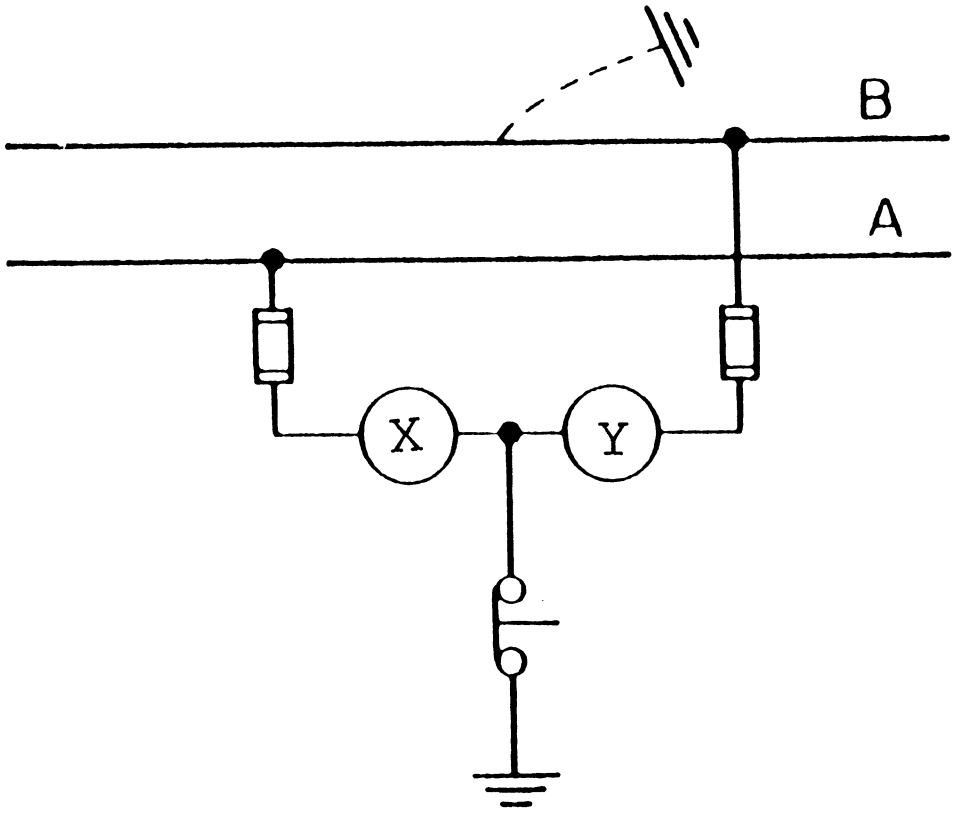

EL-0009

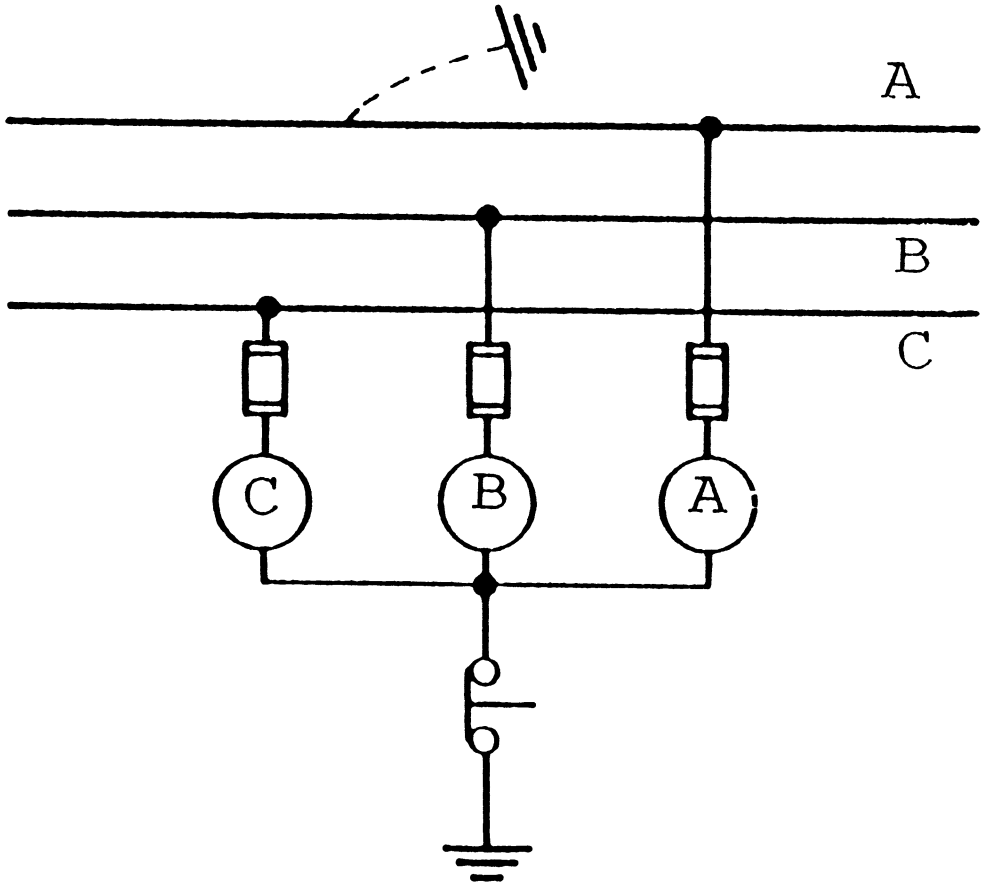

EL-0010

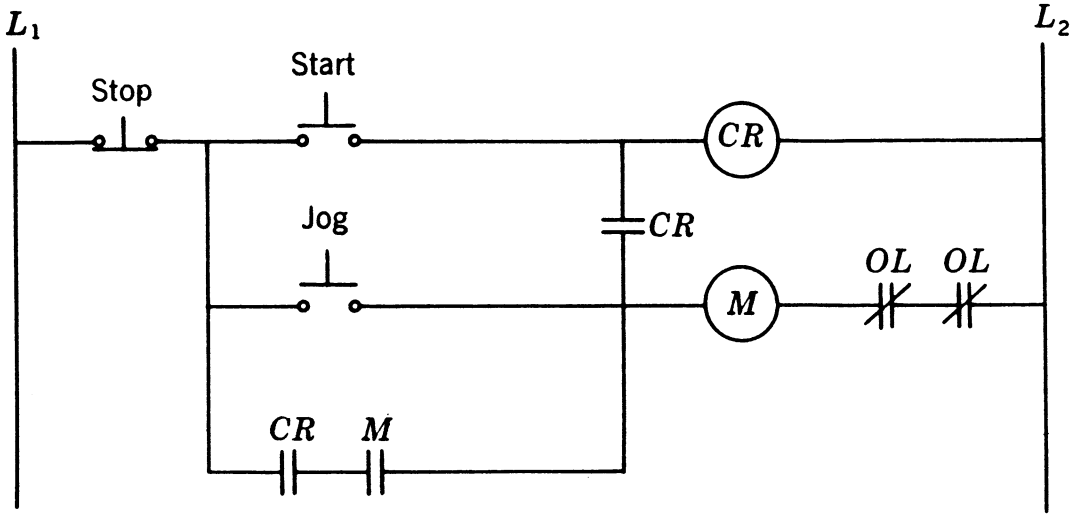

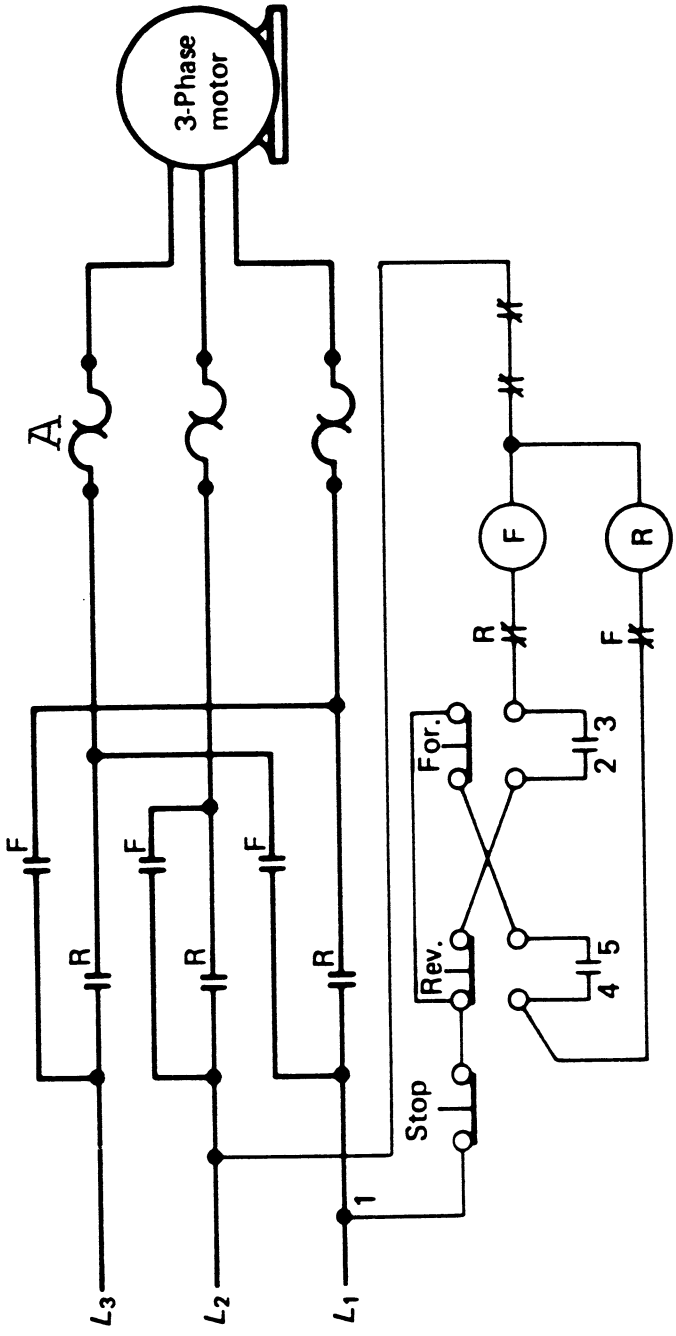
3-Phase motor
A
F
R
F
R
F
R
L_3
L_2
L_1
1
Stop
Rev.
For.
R
F
2
3
4
5
F
R

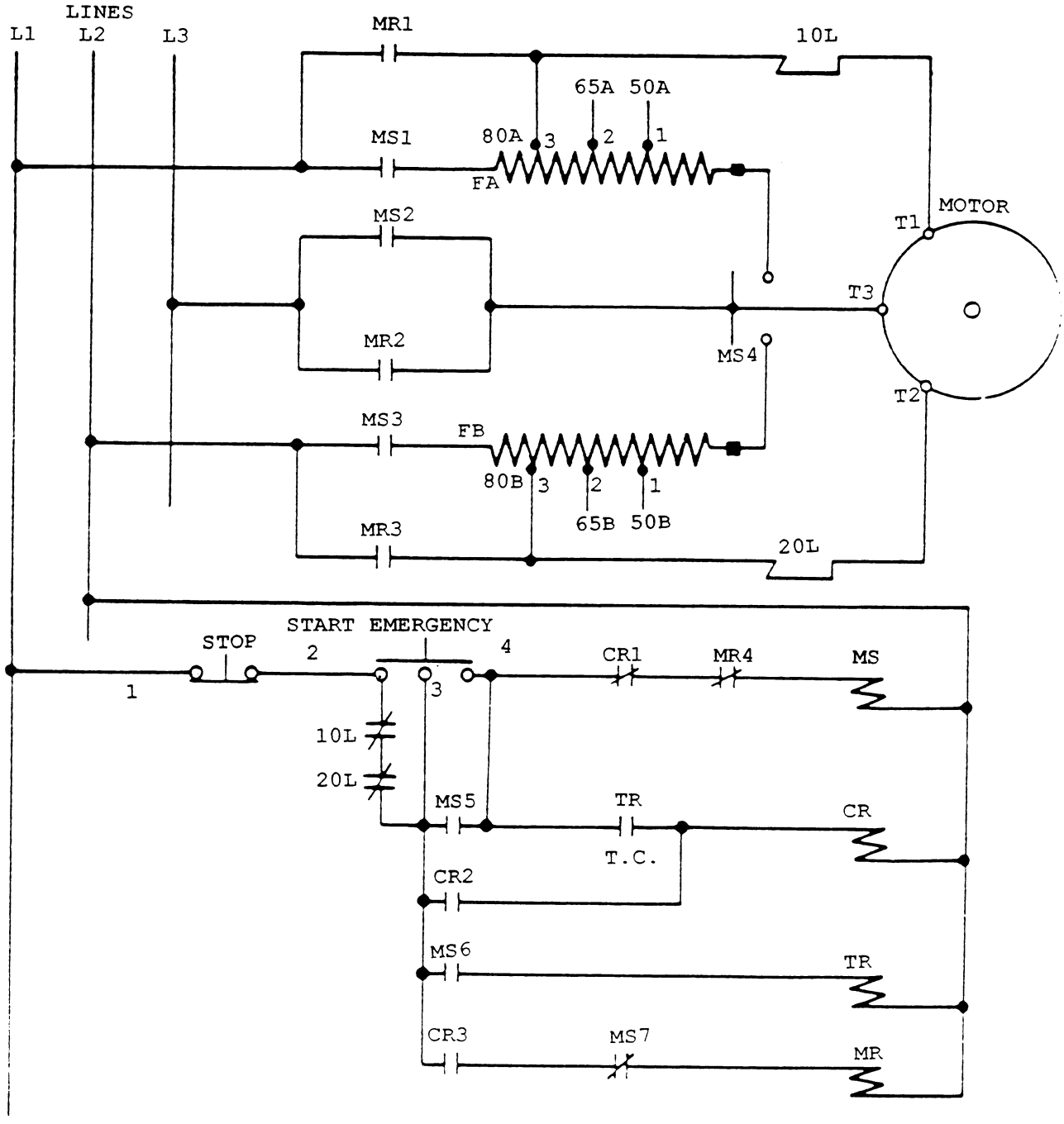
LINES
L1
L2
L3
MR1
10L
65A
50A
MS1
80A
3
2
1
FA
MS2
MOTOR
T1
T3
MR2
MS4
T2
MS3
FB
80B
3
2
1
65B
50B
MR3
20L
START
EMERGENCY
STOP
2
4
CR1
MR4
MS
1
3
10L
20L
MS5
TR
CR
T.C.
CR2
MS6
TR
CR3
MS7
MR

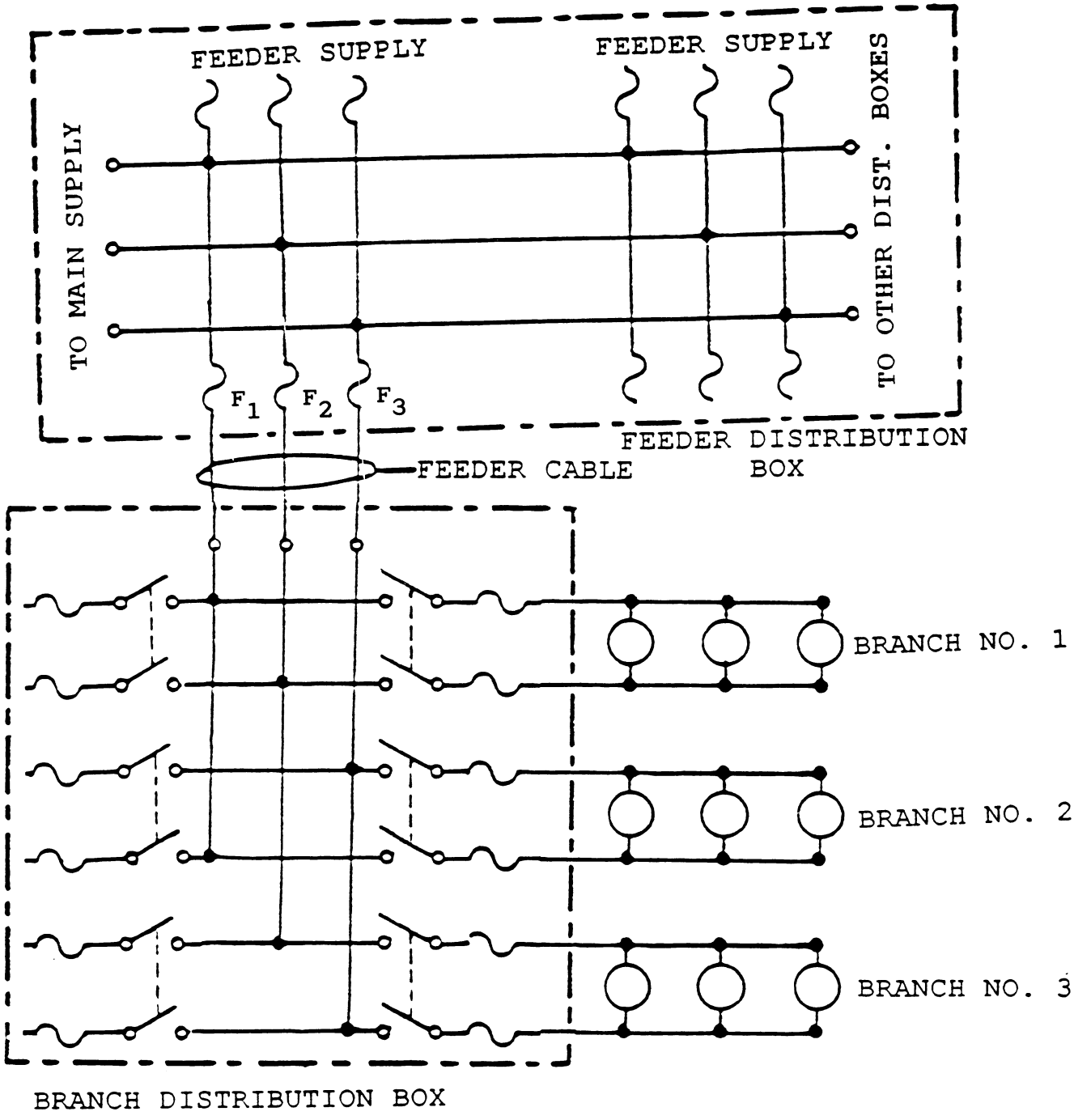
FEEDER SUPPLY
FEEDER SUPPLY
TO MAIN SUPPLY
TO OTHER DIST. BOXES
F1
F2
F3
FEEDER DISTRIBUTION BOX
FEEDER CABLE
BRANCH NO. 1
BRANCH NO. 2
BRANCH NO. 3
BRANCH DISTRIBUTION BOX

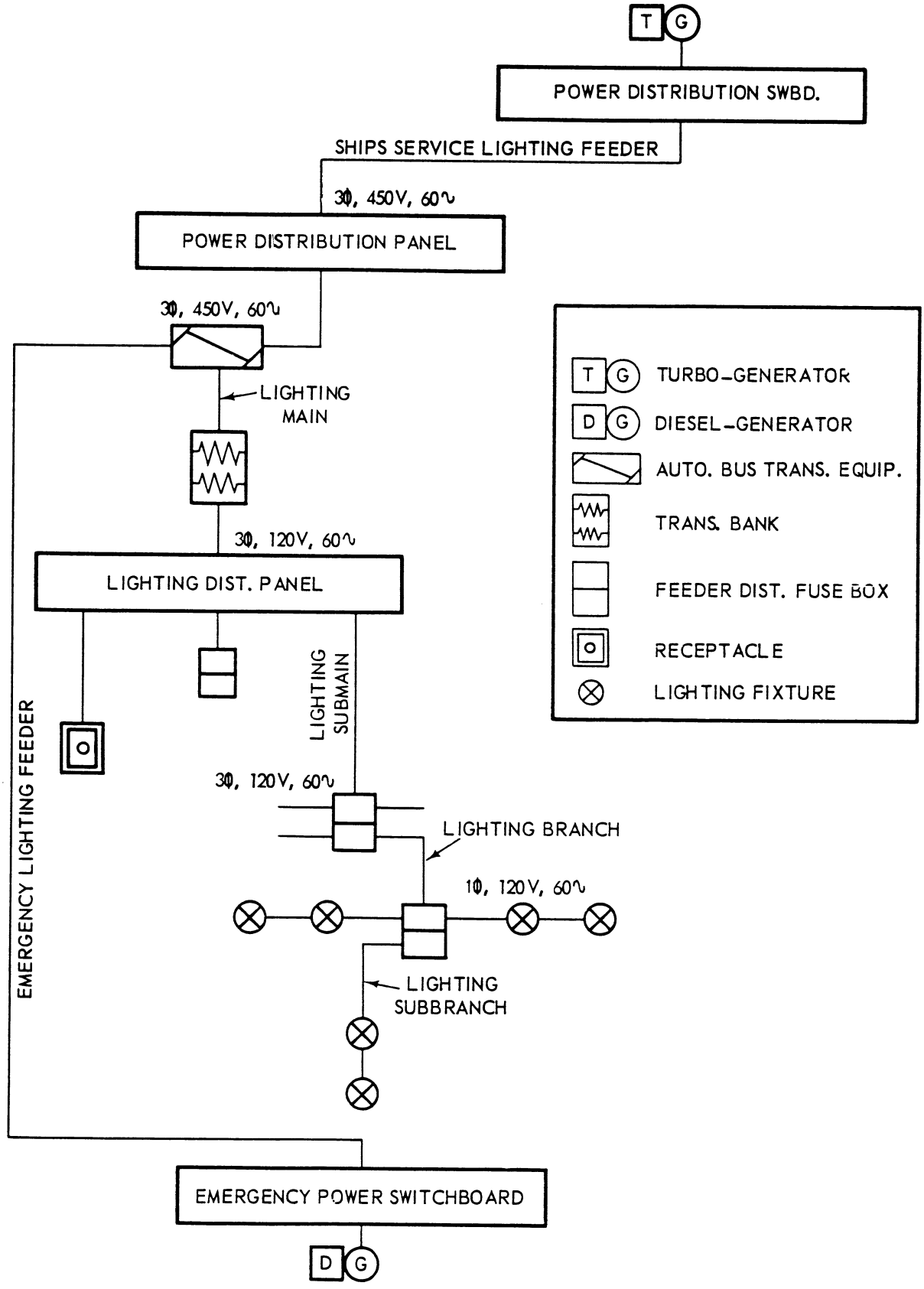
T G
POWER DISTRIBUTION SWBD.
SHIPS SERVICE LIGHTING FEEDER
3Φ, 450V, 60∿
POWER DISTRIBUTION PANEL
3Φ, 450V, 60∿
LIGHTING MAIN
3Φ, 120V, 60∿
LIGHTING DIST. PANEL
LIGHTING SUBMAIN
EMERGENCY LIGHTING FEEDER
3Φ, 120V, 60∿
LIGHTING BRANCH
1Φ, 120V, 60∿
LIGHTING SUBBRANCH
EMERGENCY POWER SWITCHBOARD
D G
T G TURBO-GENERATOR
D G DIESEL-GENERATOR
AUTO. BUS TRANS. EQUIP.
TRANS. BANK
FEEDER DIST. FUSE BOX
RECEPTACLE
LIGHTING FIXTURE

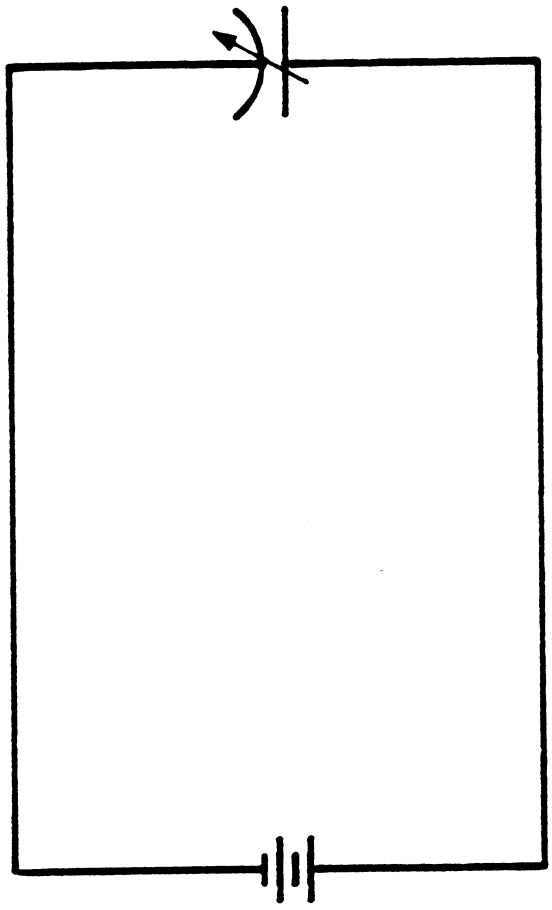

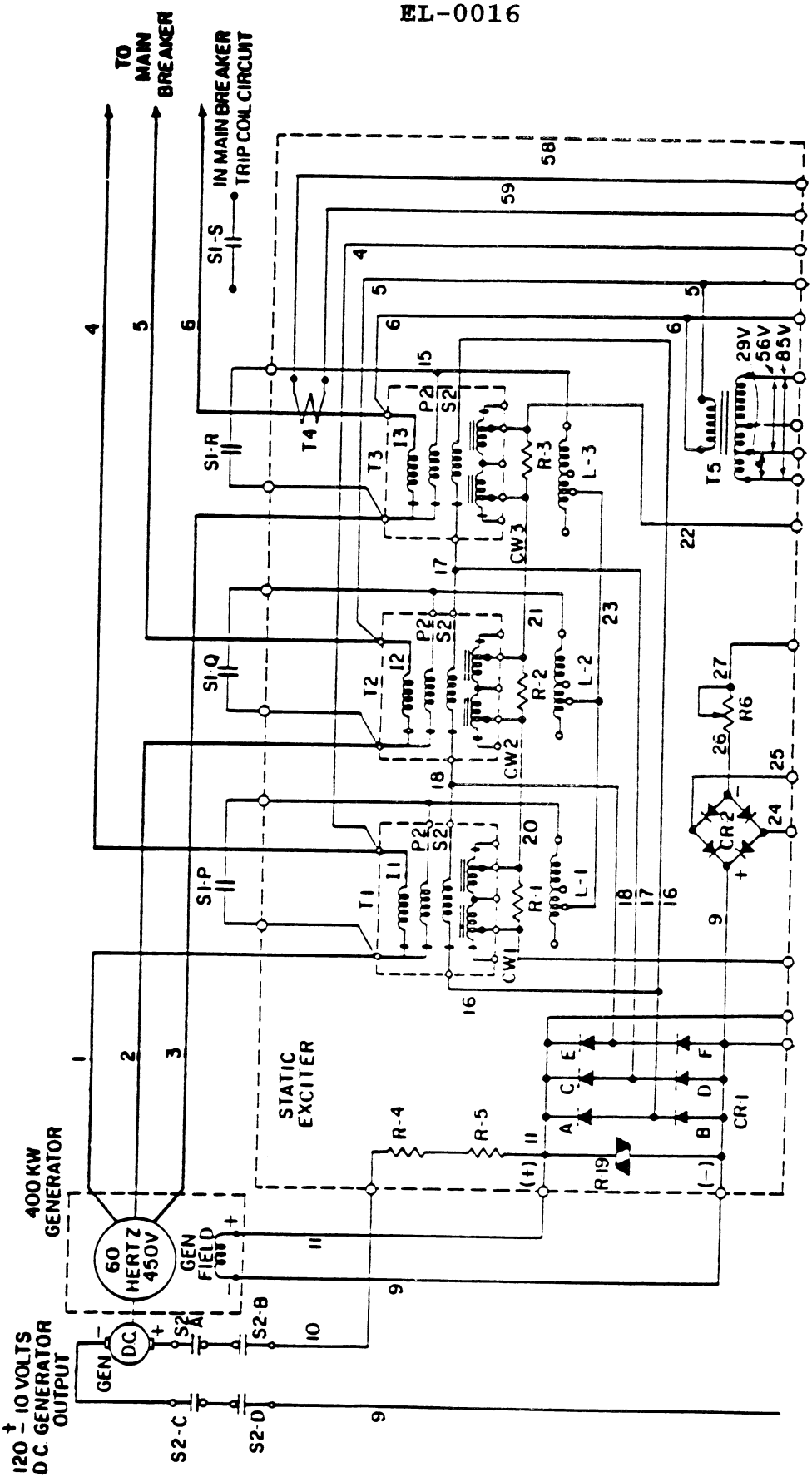
TO MAIN BREAKER
IN MAIN BREAKER TRIP COIL CIRCUIT
S1-S
S1-R
S1-Q
S1-P
T1
T2
T3
T4
T5
P2
S2
CW1
CW2
CW3
R-1
R-2
R-3
L-1
L-2
L-3
R6
CR2
CR1
29V
56V
85V
STATIC EXCITER
R-4
R-5
R19
A
B
C
D
E
F
(+)
(-)
400 KW GENERATOR
60 HERTZ 450V
GEN FIELD
S2-A
S2-B
S2-C
S2-D
GEN
DC
120 ± 10 VOLTS D.C. GENERATOR OUTPUT