U.S. Department of Transportation
United States Coast Guard

Commandant,
U. S. Coast Guard

2100 Second Street, S.W.
Washington, DC 20593-0001
Staff Symbol: (G-MSE-4)
Phone: (202) 267-1444

COMDTPUB P16700.4
NVIC 9-97

OCT 31 1997

NAVIGATION AND VESSEL INSPECTION CIRCULAR NO. 9-97

Subj: GUIDE TO STRUCTURAL FIRE PROTECTION

1. PURPOSE. This Circular explains the Coast Guard structural fire protection (SFP) regulations as outlined in Title 46, Code of Federal Regulations (46 CFR). It is intended to serve as an explanation of accepted practices which have been found to comply with the intent of the regulations.

2. DIRECTIVES AFFECTED. This Circular, with enclosure (1), supersedes Navigation and Vessel Inspection Circulars (NVICs) 6-80, 8-80, and 4-67. In addition, this circular incorporates the following G-MTH Policy File Memorandums (PFMs) 3-85, 4-85, 5-85, 3-89, 1-93, 1-94, and the following Marine Technical Notes (MTNs) 3-94 and 6-95.

3. BACKGROUND. Structural fire protection guidelines date back to Circular Letter No. 277 published in 1939 by the Bureau of Marine Inspection and Navigation, Department of Commerce. That Circular was followed by NVIC No. 2 published in 1942 which was four pages long and basically listed approved class A-1 and class B bulkhead assemblies. In effect, NVIC No. 2 was an approval list and not a discussion of structural fire protection.

   The next revision was NVIC 10-47 which was about 13 pages long and expanded the list of approved materials to include deck coverings, bulkhead panels, and non-combustible materials. This list is the origin of the list of structural fire protection materials in the modern Coast Guard Equipment Lists (COMDTINST M16714.3 series) as published periodically by Commandant (G-MSE-4). NVIC 10-47 also contained the first drawings of approved bulkhead and deck assemblies which have remained essentially unchanged and are incorporated in this latest revision.

DISTRIBUTION SDL No. 135

	a	b	c	d	e	f	g	h	i	j	k	l	m	n	o	p	q	r	s	t	u	v	w	x	y	z
A																										
B		2	10		1			1						132	1			1								30
C					*							1	*													
D	1	1		1 *							1	*														
E															1											
F	1		1								1															
G																										
H																										

NON-STANDARD DISTRIBUTION: (see page 2 and 3)

Next came NVIC 6-54 which was slightly smaller in size because it did not contain a list of approved products, which by now appeared in CG - 190, the precursor to the modern Coast Guard Equipment Lists.

Then came NVIC 10-63 which was the same as NVIC 6-54 except that reference is made to the applicability of approved products to cargo vessels (Subchapter I) and also to tank vessels (Subchapter D). This document represents the application of SFP principles, developed for passenger vessels, to other vessel types based on recognition that the principles are the same.

The next revision was NVIC 6-80 which was about 100 pages long and represents the first attempt by the Coast Guard to publish alternative guidance and interpretation of existing SFP requirements. This document was also the first attempt by the Coast Guard to discuss the background and underlying philosophy behind modern SFP requirements.

Finally, this revision of the structural fire protection guidelines incorporates Coast Guard policy developed over the past 17 years. This includes new and modern fire test procedures, internationally recognized alternatives, and alternatives developed on the basis of research.

4. DISCUSSION. Although this Circular explains prescriptive alternatives to the current regulations, it should be remembered that other alternatives may be equally acceptable if performance can be proven using an engineering analysis.

5. IMPLEMENTATION. Officers in Charge, Marine Inspection, are encouraged to bring this circular to the attention of the appropriate individuals in the maritime industry within their zones.

R. C. [illegible]
Rear Admiral, U.S. Coast Guard
Assistant Commandant for Marine
Safety and Environmental Protection

Encl: (1) Guide to Structural Fire Protection

Non-Standard Distribution:

C:e New Orleans (90); Hampton Roads (50); Baltimore (45); San Francisco (40); Philadelphia, Port Arthur, Honolulu, Puget Sound (35); Miami, Houston, Mobile, Long Beach, Morgan City, Portland OR (25); Jacksonville (20); Boston, Portland ME, Charleston, Galveston, Anchorage (15); Cleveland (12); Louisville, Memphis, Paducah, Pittsburgh, St. Louis, Savannah, San Juan, Tampa, Buffalo, Chicago, Detroit, Deluth, Milwaukee, San Diego, Juneau, Valdez (10); Providence, Huntington, Wilmington, Corpus Christi, Toledo, Guam, Sault Ste. Marie (5).

C:m New York (70); Sturgeon Bay (4).

D:d Except Baltimore, Moriches, and Grand Haven.

D:l CG Liaison Officer MILSEALIFTCOMD (Code N-7CG), CG Liaison Officer RSPA (DHM-22), CG Liaison Officer MARAD (MAR-742), CG Liaison Officer JUSMAGPHIL, CG Liaison Officer ABS, Maritime Liaison Office Commander U.S. Naval Forces Central Command (1).

ABS (20).
NOAA Fleet Inspection Office (1).
U.S. Merchant Marine Academy (1).

GUIDE TO STRUCTURAL FIRE PROTECTION

Chapter 1 General Information

1.1	Introduction	5
1.2	Equivalencies and Design Assumptions	6
1.3	Definitions	7
1.4	Applicable Coast Guard Regulations	14
1.5	Type Approval Under 46 CFR 164(series)	15
1.6	Relationship to International Regulations	16

Chapter 2 Materials of Construction

2.1	Noncombustible Materials	27
2.2	Steel or Equivalent Materials	28
2.3	Heat Sensitive Materials	29
2.4	Fire Resistant Materials	30
2.5	Structural Insulation	31
2.6	Other Insulation	35
2.7	Interior Finishes	36
2.8	Deck Coverings	38
2.9	Deck Overlays and Surface Finishes	39
2.10	Furniture and Furnishings	42

Chapter 3 Construction and Arrangement

3.1	General Design Considerations	48
3.2	Bulkheads	48
3.3	Bulkhead Panels and Linings	59
3.4	Main Vertical Zone(MVZ) Bulkheads	61
3.5	Decks	63
3.6	Noncombustible Composite Arrangements	69
3.7	Continuous Ceilings	69
3.8	Concealed Spaces	70
3.9	Draft Stops	72
3.10	Doors	73
3.11	Windows and Glass	79
3.12	Tonnage Openings	85
3.13	Cable Penetrations	85
3.14	Piping Penetrations	89
3.15	Ventilation System	98
3.16	Ventilation Ducting Penetrations	102
3.17	Fire Damper Construction	106
3.18	Fire Damper Operation	107
3.19	Ladders and Stairtowers	109
3.20	Elevators	111

Chapter 4 Aluminum Construction

4.1 General Design Considerations 113
4.2 SNAME Technical Bulletin 2-21 114
4.3 Limitations to Both Approaches 117
4.4 Specific Design Considerations 119

Chapter 5 Combustible Construction

5.1 General Design Considerations 121
5.2 Subchapter T Passenger Vessels 121
5.3 Subchapter H or K Passenger Vessels 122
5.4 Cargo Vessels 122
5.5 High Speed Craft 123

Chapter 6 Specific Vessel Considerations

6.1 General Requirements 124
6.2 Small Passenger Vessels 124
6.3 Cargo Vessels 125
6.4 Tankers 127
6.5 High Speed Craft 128
6.6 Fishing vessels 129
6.7 Mobile Offshore Drilling Units 129
6.8 Vehicle Spaces 130
6.9 Vessels Incorporating 5A Spaces 132
6.10 Canopies and Open decks 136
6.11 Small galleys 137
6.12 Decorations 138
6.13 Type 8 Spaces (Subchapter H) 139
6.14 Control Spaces 140
6.15 Void Spaces 141
6.16 Modular Construction 142
6.17 Glass Enclosures 145
6.18 Fan Rooms and Cleaning Gear Lockers 146
6.19 Machinery spaces 147

Chapter 7 Fire Load Calculation Procedures

7.1 Background 149
7.2 Fire Load Calculations 149
7.3 Fire Load Requirements 153
7.4 Submission of Calculations 154

Chapter 8 Human Element Concerns 155

Chapter 9 SFP Review Procedures 157

LIST OF FIGURES

1.1	Standard Time-Temperature Curve	13
1.2	Application of SFP Requirements	17
2.1	Deck covering/Overlay/Finish	41
3.1(a)	Insulation Overlap Requirements	50
3.1(b)	Insulation Overlap Requirements	51
3.2(a)	A-class Bulkhead Insulation Arrangements	52
3.2(b)	A-class Bulkhead Insulation Arrangements	53
3.2(c)	A-class Bulkhead Insulation Arrangements	54
3.2(d)	A-class Bulkhead Insulation Arrangements	55
3.2(e)	A-class Bulkhead Insulation Arrangements	56
3.3(a)	A-class Deck Insulation Arrangements	65
3.3(b)	A-class Deck Insulation Arrangements	66
3.3(c)	A-class Deck Insulation Arrangements	67
3.3(d)	A-class Deck Insulation Arrangements	68
3.4	Radiation Measurement Procedures	84
3.5	Insulation of Cable Penetrations	86
3.6(a)	Steel Bulkhead Piping Penetrations	90
3.6(b)	Steel Bulkhead Piping Penetrations	91
3.6(c)	Steel Bulkhead Piping Penetrations	92
3.6(d)	Steel Bulkhead Piping Penetrations	93
3.6(e)	Aluminum Bulkhead Piping Penetrations	94
3.6(f)	Aluminum Bulkhead Piping Penetrations	95
3.6(g)	Aluminum Bulkhead Piping Penetrations	96
3.6(h)	Aluminum Bulkhead piping Penetrations	97
3.7	Profile of Ventilation in Accommodations	101
3.8	Ductless ventilation Arrangements	103
3.9	A-class Ducting Penetrations	105
3.10	Ventilation Damper Control Mechanism	109
4.1	Aluminum Insulation Detail	115
6.1	Modular Construction	143
6.2	Modular Construction	144
7.1	Fire Load Calculation Submission Format	151

LIST OF TABLES

1.1	SFP Requirements for Passenger Vessels	18
1.2	Test Criteria	21
2.1	Fire Load Requirements by Space Type (Sub H)	46
2.2	Interior Finish Requirements	47
3.1	Bulkhead Performance Requirements	49
3.2	Glass Requirements by Location	83
6.1	Cargo/Tanker SFP Requirements	126
6.2	Type 5A Boundary Requirements	135

CHAPTER 1 GENERAL INFORMATION

1.1 Introduction

This document is intended to amplify and explain the structural fire protection (SFP) requirements for merchant vessels contained in Title 46 of the Code of Federal Regulations (CFR). The structural fire protection requirements for merchant vessels have been formulated having due regard for other aspects of fire safety and ship operation including detection, active suppression, manual firefighting, and the human element.

The goal of SFP is to resist or slow the spread of fire while establishing escape routes and maintaining their integrity. This goal is achieved through the following basic principles:

1. Use of materials which are resistant to ignition/flame spread
2. Use of materials which minimize the products of combustion
3. Arrangement of structures so as to resist fire spread
4. Arrangement of structures so as to separate people from fire and the products of combustion

To increase reliability, structural fire protection is designed to be passive in nature and thus eliminate the need for personnel action to make SFP effective. This eliminates, to the maximum extent possible, the possibility of human error affecting the performance of the SFP system. The result is that SFP is assumed to be extremely reliable.

The structural fire protection requirements in 46 CFR implicitly support the goal and incorporate these principles. Any alternatives to 46 CFR as outlined in this circular are also in direct support of the goal and also address one or more of the above principles. The structural fire protection regulations for small passenger vessels, tankers, and cargo vessels have been developed from the original rules for passenger vessels (Subchapter H). Chapter 6 of this circular addresses some of the differences.

In summary, table 1.1 gives a quick reference to the requirements for various materials on passenger vessels (while table 6.1 summarizes material requirements for cargo and tank vessels). Table 1.2 gives a quick reference to the test requirements described throughout this document. These tables can be found at the end of chapter 1 and chapter 6 respectively.

1.2 Equivalencies and Design Assumptions
Ref: 46 CFR 24.15, 30.15, 70.15, 90.15, 114.540, 175.540

Equivalence (general):

In the regulations for passenger vessels (46 CFR 70.15) and in other Subparts referenced above, there is the opportunity for a designer to deviate from the minimum prescriptive requirements. This applies to fittings, material, appliance, apparatus, equipment, or arrangement. The theory of equivalence is based on the presumption that the requirements in CFR represent one specific arrangement which maintains an acceptable level of safety recognizing that other arrangements may also accomplish this level of safety.

It is Coast Guard policy to consider equivalencies based on engineering analysis. Suggestions or proposals alone without an engineering analysis and/or testing are not sufficient since the burden is on the builder/designer to prove that a design which deviates from the prescriptive requirements is actually equivalent. When proving performance, the designer shall give due consideration to the goal and underlying principles of structural fire protection as described above.

Equivalence should not be used as a means to obtain acceptance of a material or arrangement when the required test resulted in failure or has not been conducted. For example, the test for "non-combustibility" as outlined in 46 CFR 164-009 should be used to prove that a material is non-combustible. Failure of this test, or failure to conduct this test, is not justification for presenting another test or different pass/fail criteria.

In some cases, the designer may wish to use active systems to augment the performance of a passive barrier. This arrangement could meet the intended performance. However, the fire tests which are used to prove the performance of SFP designs do not account for reliability which is assumed to be 1.0 for passive construction. This is not true with active systems such as sprinklers and roller shutters. For this reason, combination active and passive systems that pass the fire test, without consideration for reliability, are not necessarily acceptable substitutes for completely passive systems. It is the responsibility of the designer to address the reliability issue.

Submission of information:

For equivalency determinations, the engineer making the proposal should submit the analysis to the Coast Guard Marine Safety Center (MSC) for review. This review process will most likely result in a list of questions or concerns that need to be clarified or discussed with the submitter.

When testing is used to prove equivalency, testing should be conducted at an independent laboratory acceptable to the Coast Guard and the submission of test data should be in accordance with 46 CFR 159.005-11. In addition, the test report should address product performance as related to the minimum prescriptive requirements and a discussion of equivalence.

Acceptance of tests for the purpose of determining equivalencies results in a one time acceptance and is ship specific and does not result in a "Coast Guard approval" or "listing". Accordingly, further use of the equivalent product or arrangement should be pursued through the standard submission process in accordance with 46 CFR Subchapter Q.

Design Assumptions:

In showing equivalence, it is critical to clarify the design assumptions which will apply to the vessel during construction and operation. The designer is cautioned that design assumptions apply as long as the vessel incorporates the equivalence, which is usually the life of the vessel. This constraint may create problems if changes are made to the vessel operation, structure, or outfitting.

The designer must address these assumptions which may include items such as; fire load, egress time, suppression system actuation time, etc. These assumptions should be clearly written in the concept proposal submitted by the designer. The Marine Safety Center should document these assumptions in plan review letters and equivalency letters with a copy forwarded to the cognizant Officer in Charge, Marine Inspections (OCMI). The assumptions during design essentially become restrictions or limitations during operation.

The OCMI shall ensure that these restrictions are documented in the vessel records or MSIS as necessary during construction or upon issuance of the first COI to ensure they receive the proper attention as inspectors transfer or if the vessel changes zones. The inspector shall, during periodic inspection of the vessel, ensure that the vessel operates within these restrictions. Plan review notes are filed at the Marine Safety Center and can be accessed by the local inspector for clarification.

1.3 Definitions
Ref: 46 CFR 24.10, 30.10, 32.57-5, 72.05-5, 92.07-5, 114.400, 175.400

The definitions as presented in 46 CFR, primarily Subpart 72.05-5 (Structural Fire Protection), are applicable to this circular.

In addition, the following definitions are presented as a precursor to a discussion of structural fire protection.

Annealed glass - glass that has been subjected to slow, controlled cooling process during manufacture to control residual stresses so that it can be cut or subjected to other fabrication. Most "household" glass is annealed.

Approved materials - Materials which meet the criteria set forth in the Code of Federal Regulations as follows:

- Deck assemblies - 46 CFR 164.005 *
- Deck coverings - 46 CFR 164.006
- Structural insulation - 46 CFR 164.007
- Bulkhead panels - 46 CFR 164.008
- Noncombustible materials - 46 CFR 164.009
- Continuous Ceiling Assemblies - 46 CFR 164.010 *
- Interior finishes - 46 CFR 164.012

* These sections to be incorporated in 46 CFR Part 164

Automatic fire damper - A ventilation duct closure device activated by some mechanism other than manual activation. These devices are normally held open by a fusible link which melts at a preset temperature. After the fusible link melts, the damper automatically closes, sealing off the duct. Alternative methods of automatic operation may include closure upon detection of smoke, heat, or flame. Such alternative methods must be fail-safe meaning that loss of power or control will result in closure of the damper. When automatic dampers are used in conjunction with gaseous fire extinguishing flooding agents, the dampers are usually actuated by means of a pressure switch.

Automatic operation - The operation of a mechanism by a phenomena that is completely independent of human initiation or control at any point in the operation. An example is a fusible link in a ventilation damper or a smoke detector or a traditional sprinkler system. Automatic operation should not be confused with the terms "local" or "remote" which describe location and not event. Also, some systems are partially automatic which is termed "automated". In this case, the system action must be initiated by a person; such as a an electric switch which operates a large hydraulic water tight door.

Bulkhead panel - Sections of noncombustible panels which are fitted together to form a division. Each panel is joined to adjacent panels and to the overhead and deck with approved joiner construction. These panels are not load bearing members and are approved as B-0 or B-15 construction and may be used in A-class construction in some circumstances.

C-class smoke tight - A barrier classification that includes noncombustible construction with tight joints similar to A-class construction. Such barriers provide additional protection from smoke movement when a space is adjacent to areas where people may be expected to remain during a fire. C-class smoke tight construction should be approved by the MSC through plan submission and verified during construction by the local OCMI.

Ceiling - A horizontal partition below the overhead deck structure, usually used for the purpose of decoration. A ceiling is not considered part of the overhead structural deck but may be used as part of the assembly for fire rating purposes. This requires the use of approved materials when part of a composite assembly or requires approval under 46 CFR 164.010 (to be incorporated) if used as a continuous ceiling. In any case, ceilings are required to be constructed of noncombustible material.

Close fitting - an arrangement that is expected to prevent the passage of flame and reasonably slow the passage of smoke. This is consistent with B-class construction. With respect to joints and fittings, this usually involves overlap of parts or butted connections with surfaces generally in contact. A small number of gaps would be acceptable. As a general rule, the gaps should be no greater than 1.5 mm in width and the aggregate length of gaps constitutes a small percentage of the overall length of the seam.

Combustible material - Any material that does not meet the noncombustibility test criteria as set forth in 46 CFR 164.009.

Composite - Any combination of distinct parts combined by physical methods. Composites are not necessarily combustible materials. For example steel facing on compressed glass fiber panels is a non-combustible composite arrangement for bulkhead panels. Approved insulation on a steel bulkhead is a composite arrangement. A combustible composite would be fiberglass with an organic resin binder such as polyester or epoxy.

Concealed Space - The open area between interior joiner construction and the structural bulkheads or decks. This does not include spaces with specific designations under 46 CFR 72.05-10 such as voids or tanks. Concealed spaces are usually created by standoffs or studs used to support the finished panels from the structural barriers. Concealed spaces are not considered separate spaces for classification purposes. To this end, concealed spaces are part of already designated spaces.

Continuous B-Class ceiling - A ceiling assembly which continues across B-class bulkheads. These ceilings terminate only at A-Class or B-class bulkheads which are of the same or higher rating and which extend deck to deck. A continuous B-Class ceiling is used in lieu of extending B-Class bulkheads from deck to deck in

certain accommodation or service areas. Proposals to use such assemblies are reviewed by the MSC during plan review.

Deck covering - A material approved under 46 CFR 164.006 for the purpose of providing structural insulation for the deck. Deck coverings are applied directly to the deck.

Deck overlays - Materials used for leveling purposes prior to the application of a deck surface finish. Deck overlays are not specifically approved and may be combustible if not greater than 1 cm in thickness.

Deck surface finish - Materials such as wood flooring, vinyl flooring or carpet that are used as the exposed finish for the floor. Deck surface finishes may be applied over deck coverings and deck overlays.

Draft stop - A division installed in the concealed space between ceilings and structural overheads or behind wall linings for the purpose of preventing or slowing fire and smoke spread.

Fiber reinforced plastics (FRP) - A composite of fibers woven or arranged in a pattern or randomly distributed and held together by a resin binder.

Fire endurance - The ability of a structure or component to withstand the effects of fire and still be able to function as designed. For example, a column or load bearing structure will be capable of maintaining a load for as long as it can "endure" the fire exposure.

Fire integrity - The ability to resist or prevent the passage of flame or smoke or the transmission of heat. Fire integrity is usually measured in units of time such as minutes or hours based on the standard fire test (ASTM E-119). A rated bulkhead (A-class and B-class) has fire "integrity" for 30 and 60 minutes respectively.

Fire load - The amount of combustibles within a space. The fire load is measured by summing the total mass of the combustibles and dividing by the floor area. All combustibles are counted in the fire load including fire resistant materials.

Fire resistant materials - A term for materials which resist ignition or flame spread. These materials must pass specific tests intended to prove their limited reaction to fire. However, these materials are combustible and will burn. "Fire resistant" is synonymous with "fire retardant" and "low flame spread" for the purpose of this circular but these terms may have slightly different definitions in SOLAS or the HSC Code.

Fire risk - This term applies to the risk of ignition combined with the expected severity of the resulting fire. The term is used in 46 CFR Subchapter K, in Coast Guard policy, and in SOLAS

to describe various groupings of spaces as "high fire-risk", "low fire-risk", etc. The characteristics that determine the risk include but are not limited to; fire load, material combustibility, surface finish flammability, ignition hazards, compartment size, compartment use, etc.

Flashover - The phenomenon (of relatively short duration) which transitions fire growth from preflashover conditions to postflashover fire conditions. This phenomenon is characterized by a rapid increase in burning and smoke production combined with a rapid and substantial increase in compartment temperatures. Preventing this transition greatly increases the likelihood of successfully containing the fire to the room of origin.

Furniture and furnishings - All outfitting materials including chairs, bars, tables, lamps, bookshelves, draperies, decorations (permanent or temporary), etc. "Furniture and furnishings" do not include interior surface finishes on decks, bulkheads, and ceilings.

Glazing - Any glass that is used for windows. Glazing includes glass that is strengthened, heat resistant, tempered, laminated, or safety certified. Ceramics are also being used in place of glass because of greater fire resistance.

Heat sensitive material - A material which melts, decomposes, or loses a significant percentage of its original strength when exposed to a fire (heat source), normally represented by the standard time-temperature curve. For A-class construction the maximum exposure temperature would be 925°C and for B-class construction this would be 821°C.

Independent testing laboratory - A laboratory meeting 46 CFR 159.010. Being independent is a prerequisite for being a Coast Guard accepted laboratory. A list of accepted laboratories can be obtained from Commandant (G-MSE-4).

Interior finish - The exposed coating or veneer used for decorative purposes. Testing and approval includes the exposed finish, intermediate materials, and application materials including adhesives used to apply the interior finish. Interior finishes can be applied to ceilings, walls, and floors although different requirements may apply to different locations.

Joiner construction - The non-structural partitions used to subdivide compartments into livable and workable spaces. Bulkhead panels, ceilings, frames, and fasteners are the components of joiner construction.

Jumper duct - A short section of ducting fitted in a bulkhead with the only purpose being to allow air flow directly from one space to another (through the division). Jumper ducts may also be nothing more than a ventilation opening in a bulkhead.

Laminated glass - Glazing composed of two or more layers of glass usually bonded together with an intervening layer of resilient plastic material.

Noncombustible - Previously known as incombustible. These materials are defined in 46 CFR 164.009.

Open deck - A deck that is open to the weather on one or more sides by a permanent opening. If covered or partially covered, any spot on the deck must be less than 5 meters from the weather opening.

Operational fire load - All materials such as napkins, plastic cups, table clothes, and bar supplies. This includes electrical and electronic devices and machines such as computers, televisions, and slot machines. Operational items are not required to be of fire resistant nature (except slot machine foundations and casings as described in section 2.10), but are always included in the fire load.

Penetration - Any opening made in a bulkhead or deck to permit the passage of piping, wiring, remote control mechanism, ventilation ducting, etc.

Preflashover - The early stage of a fire characterized by a relatively small flame compared to the size of the compartment. In this stage of fire growth, flame spread occurs mainly from contact with combustibles. The room geometry or ventilation has little affect on the fire.

Postflashover - The late stage of a fire characterized by intense heat and flame engulfing all of the combustibles in the compartment. This stage is most dangerous to persons because of the intense heat, flame, and generation of smoke and toxic by-products. It is in this stage that fire retardants and low flame spread characteristics are no longer effective. It is also the time period that barrier attack is presumed to occur.

Public space - As defined in 46 CFR 72.05-5, includes halls, dining rooms, messrooms, lounges, cafes, and other similar spaces normally accessible during the voyage. Public spaces are a subset of accommodation spaces.

Rug - A small portion of carpet usually placed in front of doors and not permanently fixed. Rugs need not meet the requirements for carpets if limited in size. As a general rule, the size should be limited to the width of the door or opening and a length of 2 meters.

Safety areas - As defined by 46 CFR 72.05-5, includes control stations, passenger and crew stairway and elevator enclosures and communicating corridors, and open decks and enclosed promenades in way of lifeboat embarkation or lowering positions. Safety areas also include qualified refuge areas (QRA's).

Safety glass - Glass that has a high impact resistance and is highly tempered. Safety glass protects people against injury by fracturing into many small, blunt pieces instead of large sharp slivers. Safety glass may or may not perform well under fire conditions.

Standard fire test - A test to determine the fire endurance and integrity of a barrier assembly. Figure 1.1 shows the time-temperature curve used in the fire test as described in ASTM E-119. The International Standards Organization (ISO) and SOLAS version of the time-temperature curve (IMO Resolution A.754(18)) are similar. The criteria for classification are given in 46 CFR 72.05, SOLAS Chapter II-2, and the IMO FTP Code.

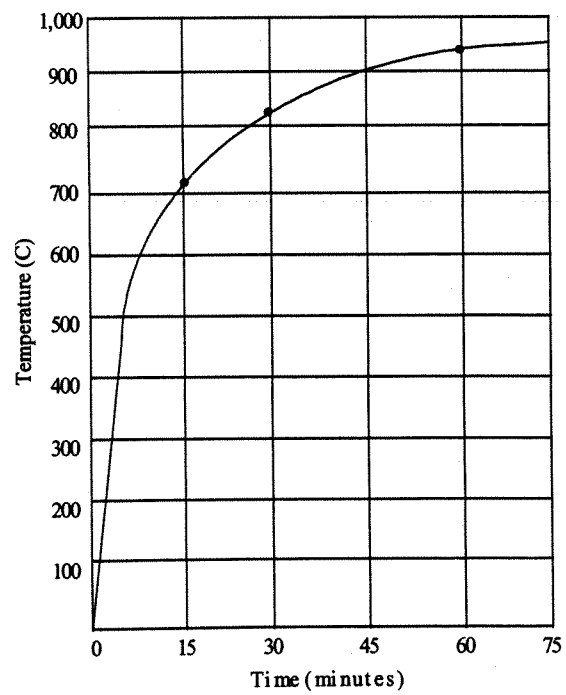

STANDARD FIRE TEST

FIGURE 1.1

Stepped main vertical zone - Steps occur when the main vertical zone bulkhead on one deck is at a distance fore or aft of the main vertical zone bulkhead on the deck above or below it. The deck area between the two bulkheads must be of similar integrity so as to form a continuous barrier representing the approximate location of the main vertical zone boundary.

Structure - The structure includes load bearing members such as the hull, superstructure, framing and supports, interior bulkheads, tank and cargo space divisions and partitions, machinery foundations and equipment foundations, and non-load bearing members such as insulation, windows, doors, ceilings, and linings. The structure does not include machinery, electrical equipment, piping, furnishings, finishes, or decorations. Structural components are required to be steel or equivalent material or non-combustible unless specific permission is given otherwise. Non-structural components often have restrictions on flammability.

Structural fire protection (SFP) - The use of passive methods such as insulation on decks and bulkheads to reduce the spread of fire and protect the ship, its cargo, and its occupants from the damage caused by the fire or its products of combustion. SFP includes low fire loading, fire restricting materials, fire dampers, fire doors, bulkheads, decks, etc. It does not include

active systems such as detectors, sprinklers, water mist, CO_2 systems, etc.

Tempered glass - Glass that is specially heat treated or chemically treated for the purpose of increasing strength and that if cut or damaged after treatment will fracture into small pieces.

Tight fitting - An arrangement that is expected to stop the passage of flame and smoke. This is consistent with A-class construction. With respect to joints and fittings, this involves connections in direct contact which are welded or bolted flanges making use of a gasket with no gaps as might be detected with a feeler gauge or by shining a light from the opposite side. Heavy coatings of paint or other readily ignitable materials shall not be used in such fittings for the purpose of passing the light test or preventing passage of a feeler guage.

Trunk - A vertical shaft or duct for the passage of pipes, wires, or other devices, including persons. Trunks are usually enclosed and extend through more than one deck.

Wire inserted glass - Glass with reinforcing wires cast into it to provide greater integrity during a fire exposure by preventing the glass from breaking into separate pieces and falling out of place.

1.4 Applicable Coast Guard Regulations
Ref: Title 46, Code of Federal Regulations (46 CFR)

The requirements for structural fire protection aboard merchant vessels are contained in Title 46 of the Code of Federal Regulations (46 CFR). Title 46 is divided into several subchapters, each dealing with a specific type of vessel or specific aspects of construction. These subchapters may be purchased from:

Superintendent of Documents
U.S. Government Printing Office
Washington, D.C.

The applicable sections are as follows:

Uninspected Vessels (Subchapter C)	46 CFR Parts 24-26
Tank Vessels (Subchapter D)	46 CFR Parts 30-40
Passenger Vessels (Subchapter H)	46 CFR Parts 70-89
Cargo and Miscellaneous Vessels (Sub. I)	46 CFR Parts 90-106

Mobile Offshore Drilling Units (Sub. I-A)	46 CFR Parts 107-109
Small Passenger Vessels (Subchapter K)	46 CFR Parts 114-122
Equipment, Construction, Materials (Sub. Q)	46 CFR Parts 159-165
Nautical Schools (Subchapter R)	46 CFR Parts 166-169
Small Passenger Vessels (Subchapter T)	46 CFR Parts 175-187
Oceanographic Vessels (Subchapter U)	46 CFR Parts 188-196

1.5 Type Approval Under 46 CFR 164
Ref: 46 CFR 159, 164

Materials requiring specific Coast Guard approval shall be tested in accordance with 46 CFR Subchapter Q. All correspondence and requests for Coast Guard approval shall be directed to:

Commandant (G-MSE-4)
U.S. Coast Guard
2100 2nd St. S.W.
Washington, DC
20593-0001

The Coast Guard does not actually test materials or systems but rather specifies the required test and minimum performance. The test report should include photographs of the test assembly, design details, report on the occurrence of damage, etc. as outlined in 159.005-11.

The testing is performed by an independent laboratory which is "accepted" by the Coast Guard. It is Coast Guard policy to formally accept and list specific laboratories for testing products to meet Coast Guard requirements.

Commandant (G-MSE-4) should be contacted if there is any question as to the requirements prior to submission for approval of any material or questions concerning lab acceptance. Coast Guard policy on test reports and laboratory acceptance is outlined in 46 CFR 159.

On occasion, test reports will be reviewed from non-accepted labs. It is required that the submitter obtain prior agreement with the Coast Guard before contracting with an independent non-accepted laboratory to determine the requirements for submission. One requirement is usually that the testing must be witnessed by a Coast Guard representative.

There are many laboratories which are not formally Coast Guard "accepted" which have marine testing experience and the ability to accomplish such testing. This may include foreign labs used for testing materials under the IMO requirements when such labs are accepted by their respective Administrations.

Materials which are approved under 46 CFR Subchapter Q are listed in Commandant Instruction M16714.3(series), "Equipment Lists" which is available to the public through the U.S. Government Printing Office.

1.6 Relationship to International Regulations
Ref: SOLAS 74 Amended to 1994, IMO FTP Code

This document is specifically intended to clarify the structural fire protection requirements as outlined in 46 CFR as applicable to U.S. certificated vessels.

SOLAS certificated vessels (U.S. flag international service) should follow the guidance of SOLAS Chapter II-2 for SFP arrangements and not 46 CFR. For the purpose of "type approvals" under SOLAS, the Fire Test Procedures (FTP) Code is the guiding document. The approval process, as outlined in paragraph 5 of the FTP Code, shall be implemented by the United States under 46 CFR 159. Appropriate inspection notes should be made to ensure the details of compliance are properly documented in case the vessel later applies for a COI.

As with any regulatory document, clarification or interpretation of SOLAS is sometimes needed. This usually occurs when the text of SOLAS leaves some requirement "to the satisfaction of the Administration". In this case, clarification or interpretation by the United States (or its representative under such programs as ACP, etc.) will be done using guidance from IMO Resolutions, Circulars, Codes, and formal interpretations as developed by the Organization. If these IMO documents provide insufficient guidance then the SFP requirements in 46 CFR or this circular may be used. Figure 1.2 graphically presents the relationship of this document to the application of fire protection regulations to merchant vessels.

APPLICATION OF SFP REQUIREMENTS TO MERCHANT VESSELS

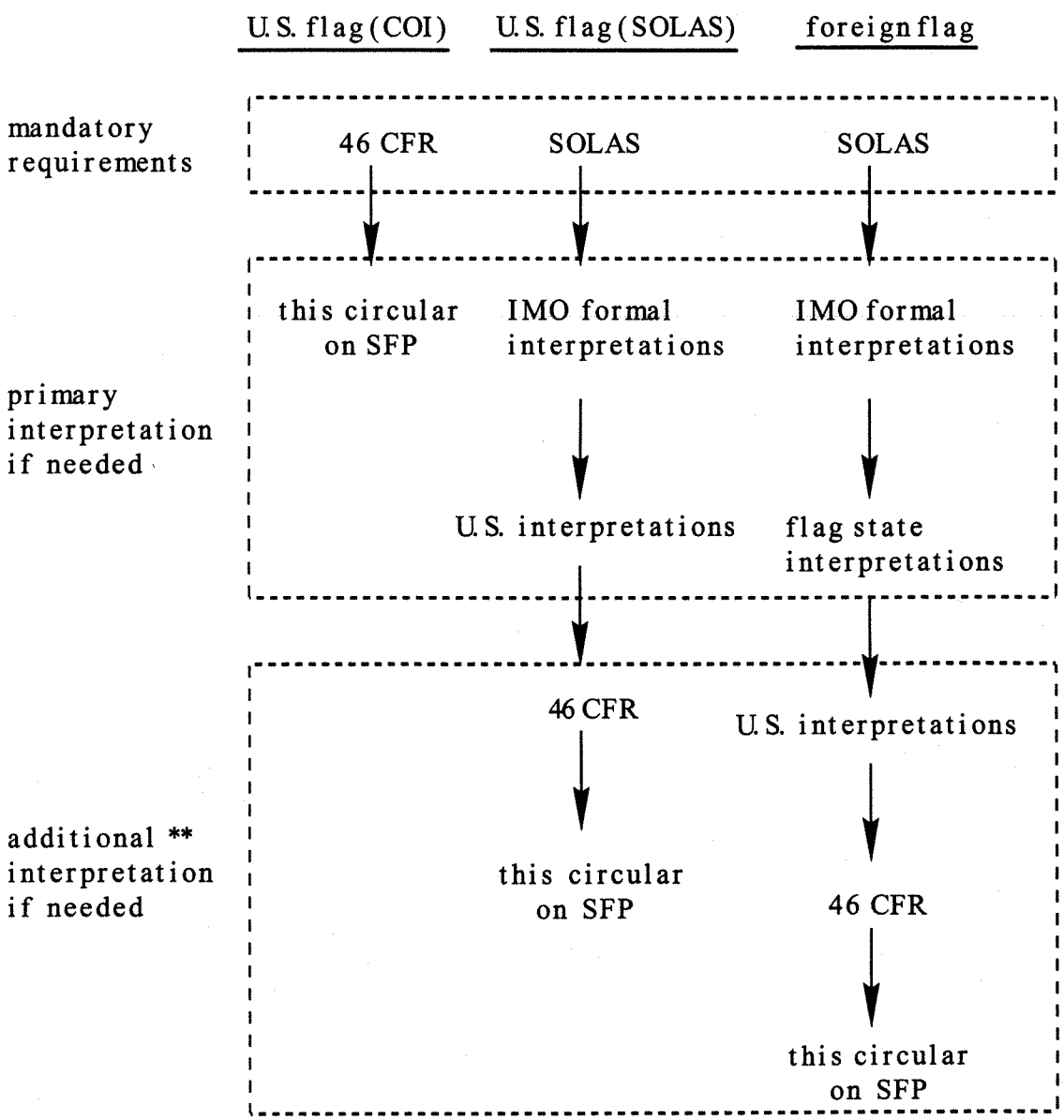

** U.S. regulations and policies regarding SFP are normally not needed when applying SOLAS except when SOLAS leaves the technical details to the flag state and the U.S. is the flag state or the flag state defers the technical details to the U.S. as port state.

APPLICATION OF STRUCTURAL FIRE PROTECTION

FIGURE 1.2

SUBJECT	REFERENCE	NOTES ON TEST CRITERIA
CEILINGS, LININGS INSULATIONS, PIPE AND DUCTING LAGGING	46 CFR 72.05-15, 72.05 - 40	164.009 FOR NONCOMBUSTIBILITY 164.012 FOR LOW FLAME SPREAD MATERIALS
SHEATHING, FURRING INCIDENTAL TO SECURING BULKHEAD LININGS OR INSULATIONS	46 CFR 72.05- 10(k)	164.009 FOR MATERIALS OF CONSTRUCTION 164.008 FOR BULKHEAD PANELS AND CONSTRUCTION METHODS
INTERIOR FINISHES: COMBUSTIBLE VENEERS	46 CFR 72.05 - 15	THICKNESS AND VOLUME LIMITATIONS WITH RESTRICTIONS AS TO WHERE THE FINISHES CAN BE USED
INTERIOR FINISHES: SPECIFICALLY CORRIDORS, STAIRS, AND HIDDEN SPACES, TYPE 8, 5, AND 5A SPACES	46 CFR 72.05 - 15	164.012 APPROVAL. COMBUSTIBLE TRIM AND MOULDING ARE PROHIBITED

SFP REQUIREMENTS FOR PASSENGER VESSELS (SUB H)

TABLE 1.1

SUBJECT	REFERENCE	NOTES ON TEST CRITERIA
DRAFT STOPS	46 CFR 72.05-10(h)	B-CLASS CONSTRUCTION (minimum B-0) PLACED AT 15m INTERVALS IN CONCEALED SPACES
PAINT AND OIL LOCKER CONSTRUCTION	46 CFR 72.03-15(a)	TYPE 9 SPACES
HULL, SUPER STRUCTURE, AND BULKHEAD CONSTRUCTION	46 CFR 72.05-10(a)	STEEL OR EQUIVALENT MATERIAL
INTERIOR BULKHEAD CONSTRUCTION AND COMPARTMENT DIVISIONS	46 CFR 72.05-10 (d)-(g)	A/B-CLASS CONSTRUCTION REQUIREMENTS AND FIRE RESISTANCE BASED ON ASTM E-119

SFP REQUIREMENTS FOR PASSENGER VESSELS (SUB H)

TABLE 1.1 (CONT.)

SUBJECT	REFERENCE	NOTES ON TEST CRITERIA
STAIRWAY AND STAIRTOWER CONSTRUCTION	46 CFR 72.05-20 46 CFR 72.05-55(c)	RESTRICTED USE OF FURNISHINGS AND INTERIOR FINISHES ARE REQUIRED IN TYPE 2 SPACES
DECK COVERINGS	46 CFR 72.05-10 PARAGRAPHS (n) THROUGH (q)	164.006 APPROVAL
DECK OVERLAYS AND SURFACE FINISHES INCLUDING RUGS AND CARPETS	16 CFR 1630 46 CFR 72.05-55(a)(4) 46 CFR 72.05-10(n)-(q)	ASTM E-84 OR SOLAS RES. A.653(16) MAY BE APPLICABLE 16 CFR 1630 "PILL TEST" SHALL ALWAYS BE APPLICABLE AS A MINIMUM

SFP REQUIREMENTS FOR PASSENGER VESSELS

TABLE 1.1 (CONT.)

TEST	CRITERIA	NOTES ON TEST CRITERIA
ASTM E-119 (A-CLASS)	FLAME TIGHT SMOKE TIGHT "T-RATING": 140 ^{o} C Rise Avg. 180 ^{o} C Rise point	USES STANDARD TIME-TEMPERATURE CURVE
ASTM E-119 (B-CLASS)	FLAME TIGHT "T-RATING": 140 ^{o} C Rise Avg 225 ^{o} C Rise point	USES STANDARD TIME-TEMPERATURE CURVE
ASTM E-84 (CARPET)	FLAME SPREAD MAX. 75 SMOKE DEVELOP MAX. 100	FLAME SPREAD TEST USING INVERTED LARGE SCALE SAMPLE
ASTM E-84 (WALL/ LININGS, PLASTIC PIPE)	FLAME SPREAD MAX. 20 SMOKE DEVELOP MAX. 10	FLAME SPREAD TEST USING INVERTED LARGE SCALE SAMPLE

TEST CRITERIA (SEE 46 CFR 2.75-17)

TABLE 1.2

TEST	CRITERIA	NOTES ON TEST CRITERIA
46 CFR 164.009	FURNACE TEMP RISE MAX 50° C SURFACE TEMP RISE MAX 50° C VISIBLE FLAMING LESS THAN 10 SECONDS TOTAL MASS LOSS LESS THAN 50%	NONCOMBUSTIBILITY TEST USING TUBE FURNACE VERY SIMILAR TO THE SOLAS TEST PROCEDURE.
FF4-72 PART 1632	CLASS-A CRITERIA 2.5 cm CHAR LENGTH MAX NON-IGNITION USING COTTON FELT UNDERLAYMENT	REQUIRED FOR ALL MATTRESSES INDEPENDENT OF THE COAST GUARD REQUIREMENTS
UL 1056	CRITERIA DESCRIBED IN THE TEST STANDARD	FULL SCALE FURNITURE TEST. SAME AS CAL TB 133 AND POSSIBLY OTHER STATE STANDARDS
UL 10B	CRITERIA DESCRIBED IN THE TEST STANDARD	FIRE DOOR TEST. INCLUDES HOSE STREAM TEST AS PART OF U.L. APPROVAL

TEST CRITERIA

TABLE 1.2 (CONT.)

TEST	CRITERIA	NOTES ON TEST CRITERIA
ASTM E-648 FOR CARPETS	CRITICAL RADIANT FLUX AT EXTINGUISHMENT OF 0.8 watts/sq.cm MINIMUM	RADIANT PANEL TEST FOR FLOOR COVERINGS. SMALL SCALE SAMPLES
CAL TB-117	CRITERIA ESTABLISHED IN STANDARD WHICH INCLUDES SEVERAL ACCEPTABLE OPTIONS	SCREENING TEST METHOD FOR FOR FOAM FILLING COMPONENTS OF FURNISHINGS
CAL TB-133	CRITERIA ESTABLISHED IN STANDARD WHICH INCLUDES SEVERAL ACCEPTABLE OPTIONS	FULL SCALE FURNITURE TEST SAME AS UL 1056 AND POSSIBLY OTHER STATE STANDARDS
CAL TB129	CRITERIA ESTABLISHED IN THE STANDARD	FULL SCALE MATTRESS COMBUSTIBILITY TEST USING AN OPEN FLAME IGNITION SOURCE

TEST CRITERIA

TABLE 1.2 (CONT.)

TEST	CRITERIA	NOTES ON TEST CRITERIA
UL 1895	CRITERIA DESCRIBED IN THE TEST STANDARD	MATTRESS FLAMMABILITY TEST. CONSIDERED TO BE A RELATIVELY DIFFICULT TEST BECAUSE OF THE SEVERE IGNITION SOURCE
ALL IMO FIRE TESTS	CRITERIA DESCRIBED IN THE APPLICABLE IMO RESOLUTION OR THE TEXT OF SOLAS	SEE THE IMO FIRE TEST PROCEDURES CODE FOR MORE DETAIL
CAL TB-106	CRITERIA DESCRIBED IN THE TEST STANDARD	SAME AS 16 CFR 1632 (FF 4-72)
ASTM E-1317	SEE IMO RES. A.653(16) FOR PASS/FAIL CRITERIA	THIS TEST IS THE U.S. VERSION OF THE IMO TEST STANDARD.

TEST CRITERIA

TABLE 1.2 (CONT.)

TEST	CRITERIA	NOTES ON TEST CRITERIA
ASTM D-635	MAXIMUM FLAME SPREAD OF 10 mm SELF EXTINGUISHMENT IN UNDER 50 SECONDS	IMPINGING FLAME, SMALL SCALE TEST FOR SURFACE FLAMMABILITY AND COMBUSTIBILITY. SEE 46 CFR 56.60-25
ASTM E-814	SAME CRITERIA USED FOR BULKHEADS	FULL SCALE FIRE TEST OF BULKHEAD PENETRATIONS
ASTME-662 FOR CARPETS.	SPECIFIC OPTICAL DENSITY (Dm) (CORRECTED MAX. AVG. FLAMING MODE AND NONFLAMING MODE) MUST BE LESS THAN 450.	SMOKE DENSITY TEST SIMILAR TO THE METHOD ADOPTED BY IMO
UL 1479	"F" AND "T" RATING CRITERIA LISTED IN THE STANDARD	FULL SCALE FIRE TEST FOR BULKHEAD PENETRATIONS SIMILAR TO ASTM E-814

TEST CRITERIA

TABLE 1.2 (CONT.)

TEST	CRITERIA	NOTES ON TEST CRITERIA
NFPA 701 TEST METHOD #1	CRITERIA ESTABLISHED IN THE STAND ARE INCLUDING WASHING REQUIREMENT	SMALL SCALE TEST PROCEDURE REPRESENTING SMALL FLAME IGNITION SOURCES
NFPA 701 TEST METHOD #2	CRITERIA ESTABLISHED IN THE STANDARD INCLUDING WASHING REQUIREMENT	LARGE SCALE TEST PROCEDURE PROVIDES A MORE SEVERE FIRE EXPOSURE
ASTM C-542	USE CRITERIA FROM TABLE 1 AND 2 INCLUDING FLAME PROPOGATION TEST USING ASTM C-1166	A STANDARD SPECIFICATION FOR LOCK STRIP GASKET MATERIAL

TEST CRITERIA

TABLE 1.2 (CONT.)

CHAPTER 2 MATERIALS OF CONSTRUCTION

2.1 Noncombustible Materials
Ref: 46 CFR 164.009
Test IMO Res A.472(XII)

The test method in 46 CFR 164.009 is intended to classify materials as "noncombustible" through the use of specific performance criteria. These performance criteria are considered characteristic of materials that will not contribute to the fire but in fact actually do allow a very limited amount of combustion.

The performance criteria in 46 CFR 164.009 include a maximum temperature rise, flaming conditions, and a percent mass loss as follows:

1. No more than 50°C furnace temperature rise (above 750°C)
2 No more than 50°C specimen surface temperature rise(above 750°C)
3. No more than 10 seconds total duration of flaming
4. No more than 50% weight loss

This test is stringent and thus "low flame spread" and "fire resistant" materials will almost certainly not pass this test and could not qualify as "noncombustible".

The following materials are considered as inherently noncombustible and thus no tests are required and no specific approval is necessary.

1. Glass, clay, ceramics or uncoated glass fiber.
2. All metals except magnesium or magnesium alloys.
3. Portland cement, gypsum, concrete with aggregates of only sand, gravel, vermiculite, silica, perlite, or pumice.
4. Woven or knitted glass fabric containing not more than 2.5 percent lubricant by mass.

Metals, under some conditions, such as reduced iron or finely powdered metals will combust and do present a fire hazard. But since these materials in this form are not structural materials but rather cargo, they are beyond the scope of this circular.

Some materials which are subject to evaporation of water will fail the noncombustibility test on the basis of weight loss. This physical phenomena of water evaporation is not indicative of combustion and such materials may be accepted on a case-by-case basis.

Composite materials may be tested as components. A component is considered as a mechanically separable part. It is not appropriate to separate homogeneous or heterogeneous chemical or physical mixtures for the purpose of eliminating combustible mass.

The result of the testing is pass/fail and the material is labeled as noncombustible or combustible. The IMO test procedure in Resolution A.472(XII) as described in the Fire Test Procedures Code (Annex 1, Part 1) is essentially identical in performance and will be accepted as meeting the requirements of 46 CFR 164.009.

2.2 Steel or Equivalent Material
Ref: 46 CFR 32.57-10, 72.05-5(i), 72.05-10(a), 92.07-10, 116.300, 177.300

With the exceptions outlined in Chapter 5 of this circular, a ship's hull, superstructure, structural bulkheads, decks, and deck houses shall be constructed of steel or equivalent material. It should be noted that 46 CFR 72.05-5(i) uses the term "equivalent metal" but the intent is not to specifically require the use of metal. Thus the term used in SOLAS Regulation II-2/23-1 "equivalent material" is more appropriate.

A material is defined as "equivalent" based on the interpretation of what properties of steel are important to structural integrity in a fire condition. The IMO interpretation is identical to U.S. policy and includes:

(1) NON-COMBUSTIBILITY: The material shall be noncombustible in accordance with 46 CFR 164.009 or IMO Res. A.472(XII).

(2) INTEGRITY AGAINST THE PASSAGE OF FLAME OR SMOKE: When equivalent materials are used in the construction of a rated barrier, the assembly shall be tested to ASTM E-119 or IMO Res. A.754(18).

(3) SMOKE AND TOXICITY: The material shall be tested to the IMO Standard for Measuring Smoke and Toxic Products of Combustion in accordance with the Fire Test Procedures Code. Appropriate U.S. test procedures could be used in substitution of the IMO tests for smoke/toxicity as determined by Commandant.

(4) STRUCTURAL INTEGRITY: The material shall not be heat sensitive based on its mechanical properties or it should be insulated accordingly. For structures using equivalent materials, the assembly shall be constructed so as to be capable of withstanding the applied loads during and at the end of a fire (when load bearing) in accordance with the IMO test procedure for determining structural properties. This procedure essentially

involves first determining the transition (critical) temperature of the material and then protecting the material (usually with insulation) to ensure it does not reach that temperature for the desired duration.

Steel or equivalent materials are not approved by the Coast Guard under 46 CFR Subchapter Q for inclusion in the Coast Guard Equipment List. These materials are approved on a case-specific basis by Commandant (G-MSE-4).

2.3 Heat Sensitive Material
Ref: Standard time-temperature curve
Test ASTM E-119

Testing of structures and structural components in the standard fire test has shown that materials which melt or significantly degrade under the subjected temperatures will cause the structure to fail prematurely and thus not meet the required performance. Based on this experience, the Coast Guard defines a heat sensitive material as one that melts or significantly degrades at or below 925°C for A-class construction and 821°C for B-class construction. There are no such limitations for C-class construction because this classification does not require any performance in the standard fire test.

The melting point of an alloy is taken as the solidus melting point. Materials may significantly degrade well below this temperature even under their own weight with no external loads applied. For example, tests have shown that brass fittings (brass with a solidus melting temperature of about 990°C) will degrade and fail after about 15 minutes in the standard fire test. Therefore, although brass has a melting point above 925°C, its degradation at much lower temperatures would make it heat sensitive in most applications.

The definition of heat sensitive material technically includes combustible material because such materials degrade when subjected to the standard fire test. However, because of additional limitations on the use of combustible materials, the regulations tend to differentiate between "combustible" materials and "heat sensitive" (noncombustible) materials.

Some materials may degrade at temperatures significantly below their ignition temperature or melting temperature when the exposure is over a long period of time. Pyrophoric materials such as wood may physically and chemically decompose at temperatures around 100°C under certain conditions. There are many examples of wood materials charring from prolonged exposure to a nearby diesel exhaust pipe. Due consideration should be given to this phenomena.

Because of the performance required of structures and structural components; including divisions and penetrations for doors, windows, cables, ventilation ducting, piping, and related components including valves, dampers, cable hangers, pipe or ducting hangers, braces, flanges, etc., heat sensitive materials are usually prohibited in construction because such materials or arrangements will unacceptably degrade system performance.

However, many compensatory actions may be taken to improve performance of these materials. The first step is to determine the critical temperature at which the material will melt or degrade significantly. The next step is to insulate the material to ensure the material does not reach that critical temperature during exposure to the standard fire test for the appropriate length of time.

For example, where plastic piping penetrates a bulkhead, it may be covered by approved insulation for a distance out from the division to ensure it remains intact in the penetration device during a fire exposure. When there is no prescriptively stated alternative in the regulations, the designer is responsible for testing and proving performance.

2.4 Fire Resistant Materials

Ref: 46 CFR 72.05-55, 116.423
Test UL 1056, IMO Res A.653(16), NFPA 701

Fire resistant materials, also known as "fire retardant" or "low flame spread", are combustible but they are relatively resistant to ignition and surface flame spread. This characteristic is associated with the initial phase of fire growth and such performance is, in general, not of relevant concern in fully involved fires because the heat flux created during post flashover conditions will overpower fire retardants causing such materials to burn vigorously. For this reason, the use of fire resistant materials is not by itself reason enough to relax fire load restrictions or other applications of active and passive fire protection systems.

Fire resistance is normally achieved through the use of specific materials or the addition of fire retardants. The performance of these materials is proven by various test methods depending on the material, arrangement, or application. The requirement for fire resistance is described in 46 CFR (including 72.05-55) and in portions of this circular (including sections 2.7, 2.9, 2.10). Fire resistance testing may be applied to component materials such as fabrics or foam materials or to entire products such as a chair or couch.

Although this section discusses generally "what" fire resistant materials are, it does not discuss "when" they are required.

Specific requirements are found in 46 CFR and this document and are often applied to furnishings, finishes, cable insulation, plastic pipe, etc.

When there is no specific Coast Guard approval series (46 CFR 164 or equivalent issued by Commandant) for these materials, acceptance of these materials may be done by Commanding Officer, Marine Safety Center, or by the local Officer in Charge, Marine Inspection upon review of test results or documentation.

Factory Added Fire Retardants:

In some cases fire resistance is achieved by the application of fire retardant chemicals which are applied to products so that they will pass certain flammability tests. When these products are added to the material at the factory during the production process then it is assumed the manufacturer of the product understands the effective life span and limitations of such chemicals (passing this information on to the consumer). These new products are tested accordingly and documentation submitted during plan review. No further action is necessary by the Coast Guard inspector to ensure effectiveness of the fire retardant after normal wear and weathering.

However, obvious damage to fire blockers from ripped fabric exposing foams or oil soaking of materials may be grounds for removal or repair. This determination should be made based on how specific damage affects specific fire resisting mechanisms.

Customer Added Fire Retardants:

The practice of adding chemical fire retardants by the shipyard or owner/operator of the vessel is highly discouraged. This is because the owner/operator has no experience or technical knowledge as to the limitation of the product. Many of these products are sold in the form of aerosol sprays and consistency of application and resulting performance is a problem.

The practice of a shipyard/contractor/owner using commercially available fire retardants specifically for the purpose of qualifying that product as meeting the requirements of 46 CFR is prohibited.

2.5 Structural Insulation
Ref: 46 CFR 164.007
Test ASTM E-119, IMO Res A.754(18)

Structural insulation must meet the criteria in 46 CFR 164.007 and should be applied in accordance with sections 3.2 and 3.5 of

this circular. The primary focus of 46 CFR 164.007 is the determination of the thickness required to provide specific thermal performance. It should be noted that this approach is based on the use of steel construction and is presumed to be applicable to other materials such as aluminum or FRP.

Determining Insulation Thickness:

The required insulation thickness is determined using a fire test in a manner described in 46 CFR 164.007. The procedure involves mounting a sample on a steel plate and exposing the sample to temperatures as described in the standard fire test (ASTM E-119). The average temperature rise (above ambient) on the unexposed side of the plate must not exceed 140°C at the end of 60 minutes nor shall the temperature at any one point, including any through-metallic connection, rise more than 180°C above ambient.

The results of this test will provide the thickness needed to maintain the thermal criteria for 60 minutes. This thickness for a specific insulation material is termed "S". When insulation is applied to a bulkhead, the bulkhead has thermal integrity for a certain period of time against temperature rise and this time is termed the "T-rating" of the bulkhead. For example, a bulkhead with insulation of thickness "S" has a "T" rating of 60 minutes. A bulkhead of insulation thickness .75(S) has a "T" rating of 30 minutes. The correlation between insulation thickness and "T-rating" is discussed below.

Theory:

In theory, the time it takes under non-steady state conditions for the temperature on the unexposed surface to rise to a predetermined level (when a constant heat flux is applied from the fire side) is a function of the material thickness, thermal inertia, and the temperature differential between the interior and exterior surfaces. Because it is a non-steady state condition, the temperature rise on the unexposed side, as a function of time, is not linear. The non-steady state condition is further complicated by the standard fire test because the time-temperature curve projects a non-constant heat flux to the bulkhead surface. For these reasons, the thickness of insulation required to maintain the temperature rise criteria for various time periods such as 15 or 30 minutes cannot be derived from linear ratios of the value of "S" based on 60 minutes. For example, one-half of "S" does not provide one-half of 60 minutes of protection.

Some research has been done by the Coast Guard using steel and by SNAME using aluminum to determine the thermal integrity of various insulation thickness', assuming a homogeneous insulation material. The duration of thermal integrity was found to be a

function of the insulation density multiplied by the thickness raised to the second power.

The Coast Guard assumes that steel is not affected by the fire and thus it does not matter which side is insulated. Research has proven otherwise and in fact the side insulated does affect the performance of the barrier with respect to the temperature rise criteria. SOLAS does address this issue and the result will be a different SOLAS rating "S" depending on the side insulated. Insulation placed on the unexposed side (outside of the furnace) does not work as well as insulation placed on the exposed side of the structure. The SOLAS test procedure is tougher because it requires the insulation to be placed on the unexposed side and this will result in a greater thickness of insulation for the same rating.

Practice:

In some cases, the local inspector will have access to the data sheet which will specify the thickness required for times less than 60 minutes. Otherwise, the thickness can be conservatively estimated as (.75)S for 30 minutes and (.5)S for 15 minutes.

Composite layers of insulation should be tested as a system because adding fractions of "S" from various materials may not produce an accurate result. As a general rule, (.5)S of one material plus (.5)S of another material will equal (1)S total, keeping in mind that (.5)S of one material may not be the same thickness as (.5)S of another material. This approximation is based on the fact that one-dimensional heat transfer can be modeled as electrical resistance in series independent of the non-linearity of the heat transfer equation. This approach is considered conservative because it does not account for contact resistance between layers.

Figures 3.2(a)-(e) and 3.3(a)-(d) give approved composite arrangements that do not require testing. These figures can be found at the end of Chapter 3. Sections 3.2 through 3.7 provide more detail on insulation arrangements of bulkheads, decks, and fittings.

When necessary, the local OCMI can check with the manufacturer or the Coast Guard Equipment List for documentation on a specific product. Commandant (G-MSE-4) is responsible for approvals under 46 CFR 164.007. This documentation should include;

- Name of product
- Name of manufacturer
- The 164 series approval number specific to the product
- The type of material such as sprayed fiber or mineral wool
- Density of the material
- Thickness "S" as required for 60 minutes or other times as may be designated on the approval sheet.

Mechanical Attachment of Insulation:

The application of approved structural insulation should be in a manner that can withstand the normal movement of the vessel, the normal wear associated with the use, and the heat effects of a fire during which it is intended to protect the structure. The most common method of application of insulation to steel bulkheads has been with welded steel pins and clips. SNAME Technical Bulletin 2-21 (pg. 14) provides guidelines for attaching insulation directly to aluminum bulkheads. The spacing and method of attachment shall be as follows:

1. When bulkhead assemblies are tested with insulation as is done under IMO Res A.754(18), then the method of installation shall be exactly as tested and approved.

2. When insulation is tested under 46 CFR 164.007, then the insulation shall be installed according to the manufacturers guidelines as approved by the Coast Guard.

3. When the manufacturer does not specify a method of installation approved by the Coast Guard, then mechanical attachment using welded steel pins and clips shall be used. The pins shall be minimum 3 mm diameter and spaced .3 meters on center in a square grid pattern. Steel clips shall be a minimum of 3 cm in diameter. The use of channels for stiff insulation boards or numerous connectors with a wire mesh to hold loose filled material should be discussed with the MSC during detail plan review for approval.

Other Methods of Attaching Insulation:

Other methods such as glue or resin binders shall be specifically approved by Commandant after undergoing performance-based testing in the standard fire test. Desirable performance for attaching mechanisms include;

1. Materials should be noncombustible and low smoke generation.
2. Materials should not be heat sensitive.
3. Connectors should minimize direct heat transfer to the bulkhead.

Final approval, of course, is based on the performance in the furnace. Other concerns that must be addressed include durability with respect to flexure, impact, vibration, sagging, and aging.

These requirements for attaching structural insulation apply whenever such insulation is used including bulkheads, decks,

beams, columns, concealed spaces, and the interstitial space of doors.

Application to Materials Other than Steel:

The above discussion about insulation is based on the performance of steel plate. Steel is assumed to retain its strength and load bearing capability during the standard fire test even when not insulated. Other materials such as aluminum or fiberglass may have core temperature rise criteria that will require insulation in addition to the thermal integrity requirements. SNAME TB 2-21 and the IMO procedures for steel or equivalent material provide a good discussion on this issue.

2.6 Other Insulation Requirements
Ref: 46 CFR 32.57-10(d)(7), 72.05-40, 116.430, 164.009, 164.007
Test ASTM E-119

Any insulation (on inspected vessels other than Subchapter T) that is not used for structural fire protection (i.e. used instead for heat and comfort or air conditioning) shall be noncombustible. All materials incidental to this insulation shall also be noncombustible. The following exceptions apply(even when permitted under the following exceptions,the application of combustible insulation should be kept to a minimum in accordance with 46 CFR 72.03-5(a), especially when the material is particularly flammable):

1) Cable insulation shall be fire resistant as defined by the requirements of Subchapter J of 46 CFR which references the fire test procedure in IEEE Standard 45 and the IEC. These standards ensure limited combustibility and resistance to flame spread. There is no actual limit to the amount of cabling that may be placed in a concealed space.

2) Cold service piping including refrigeration and chill water may use combustible insulation but the surface shall be covered by a non-combustible or low flame spread covering.

3) Combustible insulation may be used in cargo spaces. However, whenever polyurethane or other combustible materials are installed, it is recommended that a covering of thin (22 USSG) steel or other suitable noncombustible material be installed over the insulation. Such a covering should be stenciled with a warning indicating that it protects the combustible insulation from fire. Hot work precautions should always be taken as described in chapter 8 of this circular.

4) In machinery spaces, Pipe and machinery insulation and lagging may be combustible. See section 6.19 for more detail on machinery space insulation.

5) Refrigerated space insulation may include polyurethane or other combustible foam provided that the space is bounded by appropriately classified barriers providing deck to deck and bulkhead to bulkhead integrity. In other words, the thermal insulation is contained within the refrigerated compartment. For Cargo vessels, the boundaries shall be A-class construction. For passenger vessels, the appropriate tables should be used to determine the barrier construction. It is incorrect to assume that refrigerated spaces are too cold to be a fire hazard. Refrigerated spaces are considered storerooms (type 9 spaces) and the barrier rating shall be accomplished with standard construction and insulation practices using noncombustible construction and insulation approved under 164.007 taking no credit for the refrigeration insulation if it is not approved insulation under 164.007. It would not be appropriate to use the "R" rating of the polyurethane as credit toward achieving the thermal integrity of the bulkhead. Polyurethane insulation is combustible and could very well be the primary fuel for the fire. When used, the surfaces should be lagged or covered with thin steel sheathing or a noncombustible or low flame-spread material to reduce the fire hazard within the compartment.

6) Adhesives used to secure insulation and vapor barriers against the pipe or ductwork may be combustible but shall not fail early in a fire and shall be applied in limited quantities. Combustible adhesives or any combustible materials shall not be in direct contact with heat sources.

Vapor barriers should be used to protect the exposed surfaces of insulation where flammable and combustible liquids or vapors are present. If vapor barriers are not used, the insulation could become oil soaked and would require immediate replacement.

2.7 Interior Finishes
Ref: 46 CFR 32.56-50, 72.05-15, 92.07-10(d), 108.143, 116.422,164.012, SOLAS Regulation II-2/34
Test ASTM E-1317, E-84, IMO Res.A.653(16)

An interior finish is defined in 46 CFR 164.012-5(a) as any coating, overlay, or veneer except standard paint which is applied for decorative or other purposes. It includes not only the visible finish, but all material used in its composition and its application to the approved "bulkhead panel" or "noncombustible substrate". Interior finishes are normally used on the exposed surface of bulkheads, ceilings, and decks, including exposed surfaces in concealed spaces.

Approved interior finishes (46 CFR 164.012) are required on merchant vessels (except Subchapter C and T) in the following locations:

- concealed spaces (in accommodation, service and safety areas)
- corridors
- stairway enclosures
- low risk accommodation spaces (type 8, 5 and 5A spaces)

All other accommodation spaces, service spaces, and safety areas may have combustible veneers not to exceed the requirements of 46 CFR 72.05-15(b)-(c) or 116.422 as discussed below.

Combustible Finishes:

When combustible finishes are permitted in accommodation spaces on Subchapter H and K vessels, 46 CFR 72.05-15 and 116.422 restrict their use on walls and ceilings to a thickness and total volume limitation.

The thickness restriction (2 mm) is applicable to the veneer used on the flat surfaces. It is not appropriate to attempt to "average" the thickness of an interior finish to meet the requirement by leaving some bulkheads uncovered and using thicker finishes on other bulkheads.

The total volume limitation (2.5 mm times the total surface area of the walls and ceiling) helps to account for molding, trim, and decorations which are attached to the bulkheads or ceiling. This molding and trim could not practically meet the thickness limitation for veneers. When applying this total volume limitation, the combustible veneer must be included in the calculation.

Combustible molding, trim, and decorations must not perform any structural function and shall not be used in corridors, stairway enclosures or extend into concealed spaces and are not permitted in type 5 or 5A spaces. Handrails in stairways shall be noncombustible construction but may have approved finishes in accordance with 72.05-20(m).

These limitations on thickness and volume do not apply to deck surface finishes which are described in section 2.9.

The term "combustible finish" (considered to be the opposite or compliment of "approved" surface finish) is a little misleading since even approved finishes are combustible. 46 CFR, however, makes the differentiation between "approved" and "combustible" which will suffice for the purpose of this document. Keep in mind that the only materials which are actually noncombustible are those approved to 46 CFR 164.009.

Approved Surface Finishes:

Approved surface finishes must comply with 46 CFR 164.012 (or be noncombustible in accordance with 46 CFR 164.009) and may be tested to any of the following test procedures:

1) ASTM E-84 (20/10 for bulkheads/ceilings and 75/100 for carpets and floor surface finishes), or

2) meet IMO Resolution A.653(16) in accordance with the FTP Code (Part 5), which includes smoke testing in accordance with Part 2 of the Code. ASTM E-1317 may be used in place of IMO Resolution A.653(16) using the same pass/fail criteria.

When testing interior finishes, all layers and adhesives should be tested as a composite and approval shall be based on the tested configuration. The above tests are listed in Table 1.2 with some additional notes. Table 2.2 at the end of this chapter summarizes the requirements for interior finishes on merchant vessels.

Ceiling light diffusers are also subject to the requirements for interior finishes. However, plastic ceiling light diffusers are exempt from restrictions if enclosed in a metal light fixture, and if the total surface of the light diffusers does not exceed 35% of the ceiling area in the space. When installed in stairways, corridors, and control stations, this percentage shall not exceed 25% of the total ceiling area.

In the event that paint is used as a finish, the regulations permit a limited number of coats but specifically prohibits highly flammable and noxious fume producing paints. This requirement has not been clarified by defining "highly flammable" but, in theory, the painted surface would perform the same as veneers or other surface finishes as may be required in 46 CFR 72.05-15 and 164.012. However, it is not considered a significant problem when paint is applied directly to steel or other noncombustible substrate and thus testing and documentation is not normally required for painted surfaces.

2.8 Deck coverings
Ref: 46 CFR 164.006
Test ASTM E-119, IMO Res. A.687(17),

Deck coverings are used specifically for the purpose of increasing the fire integrity (thermal) of steel or equivalent material for A-class or B-class construction. Deck coverings as described in 46 CFR 164.006 are essentially structural insulation. Such deck coverings must be applied directly to the

deck. It is not acceptable to use any non-approved materials between the structural deck and the deck covering except for a reasonable number of coats of primer.

Deck coverings are approved in accordance with 46 CFR 164.006. This test method contains three specific test criteria namely; limited organic (carbon) content, limited smoke generation, and fire resistance and integrity. Although these requirements are not identical to the noncombustibility test, the resulting performance is very close to noncombustible. Therefore, it is assumed that the materials approved under 164.006 are noncombustible when used in their intended purpose as a deck covering and thus are precluded from the fire load calculations. Furthermore, any material meeting the requirements of 46 CFR 164.009 may be used as a deck covering but the fire resistance and integrity test outlined in 46 CFR 164.006-4(c) is required to determine the thickness "S" in the same fashion that bulkhead insulation is approved for A-15, A-30, etc.

Materials approved under IMO Resolution A.687(17) as "primary deck coverings" do not meet the requirements of 46 CFR 164.006 because the IMO low flame spread requirement does not sufficiently limit the combustibility of the material.

2.9 Deck Overlays and Surface Finishes
Ref: 46 CFR 32.57-10(d)(6), 72.05-10(n), 92.07-10(d)(6), 116.423, 116.425
Test ASTM E-84, E-648, E-662, IMO Res. A.653(16)

Deck Overlays:

Deck overlays are used specifically for the purpose of leveling or creating a compatible surface in preparation for the final deck surface finish. Such materials may be used over the approved deck covering or applied directly to the deck when it is of A-0 construction. Deck overlays are not intended to be used to insulate the deck as an approved deck covering nor are they intended to be exposed deck surface finishes.

For this reason, any material may be used as an overlay as long as the combined thickness of combustibles that comprise the overlay generally does not exceed 1 cm (but combustible materials will be included in the fire load). Otherwise, the material used for overlay should be noncombustible. The thickness limitation may be waived by Commandant according to 46 CFR 72.05-10(n) or may be exempted in certain spaces according to 46 CFR 72.05-10(q).

Deck Surface Finishes:

Deck surface finishes are the final (exposed) surface of the deck. Examples include carpet, wood flooring, vinyl tiles, etc. Such finishes may be of any thickness regardless of space designation but will be included in the fire load if combustible. In spaces requiring "fire resistant furnishings" including corridors, stairways, type 5 or 5A spaces, the deck surface finish shall meet the requirements for low flame spread and smoke generation as outlined below for fire resistant carpet (the "pill" test only applies to carpet).

It is possible under some conditions (A-0 construction) to have a deck surface finish applied directly to the structural deck such as carpet glued directly to steel plating. This practice is discouraged because of the rapid heat transmission through the metal to the combustible glue and surface finish which could lead to excessive smoke generation or possible auto-ignition when a fire is impinging on the deck from the compartment below.

Deck surface finishes in machinery spaces or spaces containing or processing flammable liquids should be limited to dielectric vinyl floor coverings or rubber mats for electrical safety purposes or cleaning footwear when entering control stations or work shops from adjacent machinery areas.

Deck surface finishes as described in this circular are analogous to "deck finish materials" defined in SOLAS and tested under IMO Res. A.687(17) and A.653(16). Materials qualifying under these SOLAS Resolutions are acceptable for U.S. certificated vessels. See the FTP Code for further details of SOLAS requirements.

Carpets:

All U.S. made carpets must meet the Consumer Product Safety Commission's methenamine pill test (16 CFR 1630). Foreign-made carpets must therefore show compliance with this specification as well. This requirement applies to all carpets in all spaces as a minimum requirement.

On passenger vessels, "fire resistant" carpeting is required in spaces which require fire resistant furniture and furnishings and approved interior finishes. To be considered "fire resistant" the carpet must meet one of the following 4 options; which are in addition to the "pill test" mentioned above:

1) Consist of 100% wool (no additional testing required)

2) Tested to ASTM E-84 with a flame spread rating not to exceed 75 and a smoke developed rating not to exceed 100

3) Tested to ASTM E-648 with a critical radiant flux not less than 0.8 watts/cm^2, and meet ASTM E-662 with a specific optical density not to exceed 450 in both flaming and non-flaming modes.

4) Meet IMO Resolution A.653(16) in accordance with the FTP Code (Part 5), which includes smoke testing in accordance with Part 2 of the Code.

Any pads or underlayments may be tested with the carpet or separately. If tested separately, carpets and pads must meet the same criteria.

Carpet is permitted to extend 10 cm up the bulkhead from the deck or combustible cove molding may be used as part of the flooring/carpet assembly. Carpet shall not extend under any door in A-class or B-class divisions but may be placed on stairs including the riser portion.

The use of wood carpet strips is acceptable for securing the carpet to the floor in which case the carpet strips and padding are considered a deck overlay. The carpet, underlayment, wood strips, and cove molding, if combustible, shall be included in the necessary fire load calculations.

Vinyl or Wood Flooring:

These materials are commonly used as a deck surface finish in accommodation spaces. As noted above, there are no thickness limitations but when fire resistant furniture and furnishings and approved finishes are required, the vinyl or wood deck surface finish shall meet the flame and smoke criteria stated above for carpets.

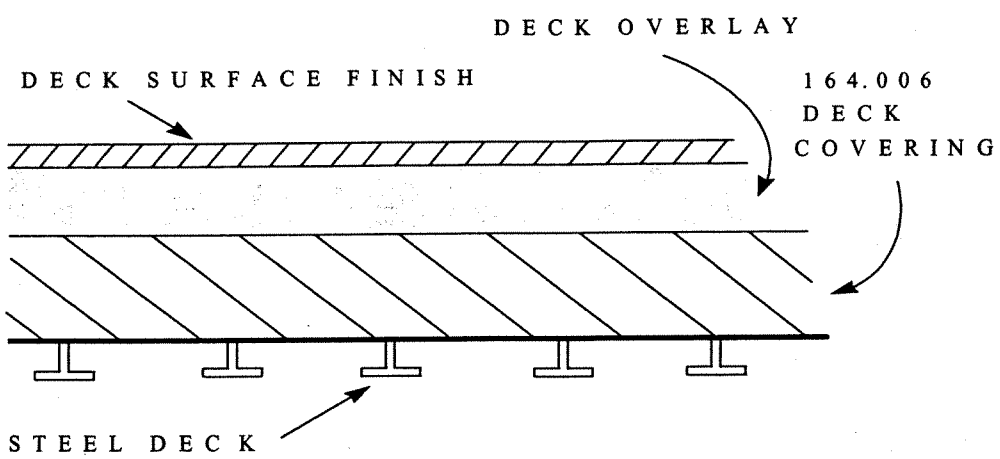

DECK COVERING / OVERLAY / FINISH
FIGURE 2.1

Testing of Materials:

For deck overlays and deck surface finishes, testing may be done for individual components or as a composite in the arrangement intended for actual installation. If tested individually, each component shall meet the same criteria.

Figure 2.1 shows a detail of the relationship between deck coverings, overlays, and deck surface finishes.

2.10 Furniture and Furnishings
Ref: 46 CFR 72.05-55, 116.423
Test UL 1056, CAL TB 133, IMO Res A.688(17)

Not all compartments require fire resistant furniture and furnishings and when they are required, not all of the requirements are the same. This section describes the specific requirements for fire resistant furniture and furnishings and outlines when they are required.

Fire Resistant Furniture and Furnishings:

1. Case furniture shall comply with 72.05-55(a)(1). This includes slot machine foundations and slot machine frames and casings which shall be noncombustible construction. Approved finishes under 46 CFR 164.012 may be used on any of the surfaces of the case furniture. One exception for approved finishes is the top (wet) surface of vanities in bathrooms as discussed in section 6.13.

2. Free standing furniture such as chairs, tables, and sofas must have frames of noncombustible materials in accordance with 72.05-55(a)(2). The frame is generally defined as the component which provide structural support. The original type of chairs envisioned by the regulations consisted of a steel frame with a bottom cushion and a back cushion. The materials forming the cushion backing can be combustible (in type 5 spaces) such as plywood or fiberglass. Some newer designs provide seating which is of modular or wrap-around construction. Chairs of this type consist of a molded plastic back or bottom integral with the legs. Furniture of such design does not comply with the intent of the regulations and should be tested as described below. Tables with a noncombustible frame have no restriction on the top. For example, gambling tables may have a plywood top with a felt surface.

3. Upholstery and padding (foam cushions) when required to be fire resistant shall be tested as follows. The fabric shall be tested in accordance with NFPA 701 (1996 Edition, see Chapter 1 of the standard for applicability of test procedures to various

materials or layers). Washing, dry-cleaning, or weathering requirements are required prior to testing as outlined in NFPA 701. The choice of which procedure to use should be made based on the most likely use of the fabric. Foams shall be tested as individual components using California (Cal) TB 117 (using the pass/fail criteria listed in the standard). Cal TB 117 involves several different test procedures depending on the type of filling material. Cal TB 116 is not an acceptable test procedure because it uses only a smoldering ignition source and is not applicable for determining flame resistance. Other similar state or national tests may be acceptable.

4. As an alternative to component testing and specific construction standards, furniture can be tested to Cal TB 133 or UL 1056 with pass/fail criteria listed in Table 1.2. This option does not make any restrictions on the combustibility of the frame or the type of foam or fabric used in the construction of the furniture. UL 1056 and California Technical Bulletin 133 option A or B are similar in nature to other state standards that may be accepted as equivalent. The use of "mock-ups" shall not be permitted for initial certification. Mock-ups may be considered for testing different fabrics or padding on an identical piece of furniture but requires prior approval from the Marine Safety Center (MSC).

5. Draperies and fabrics hung in the vertical direction must pass NFPA 701 (1996 Edition, see Chapter 1 of the standard for applicability of test procedures to various materials or layers). Such fabrics are not intended to be surface finishes for bulkheads but if used in such a fashion shall be tested as an interior finish. This approach will most likely preclude their use as an interior finish. Washing, dry-cleaning, or weathering requirements are required prior to testing as outlined in NFPA 701. The choice of which procedure to use should be made based on the most likely use of the fabric.

The requirements for "fire resistant furnishings" do not apply to lamps, televisions, computers, typewriters, etc. Nor do these requirements apply to electrical equipment and electrical cabinets/enclosures constructed to UL 67 and UL 50 in accordance with Subchapter J. However, all of these items must be included in the fire load when they are combustible or contain combustible components in accordance with Chapter 7 of this circular.

In differentiating case furniture (desks) from free standing furniture (tables), it should be noted that "tables" include only those furnishings which have individual legs and a simple top surface. While "desks" include a top surface supported by cabinets or enclosed sides. Also, "desks" often include shelving or framing above the top surface as a single attached unit and thus classified as case furniture.

Requirements For All Compartments:

All mattresses regardless of the compartments in which they are used, shall meet the U.S. Department of Commerce Standard for the Flammability of Mattresses and Mattress Pads (FF 4-72, amended), 16 CFR Part 1632, Subpart A. In addition, mattresses shall not contain polyurethane foam.

The reason for this additional restriction is that the above mentioned Department of Commerce test only tests the outer surface material (ticking) for ignitability from a smoldering source (cigarette) but does not effectively screen the filling material for ignitability.

In lieu of 16 CFR Part 1632, and the restriction against polyurethane foam, the following test procedures which use open flame ignition sources are acceptable:

1. IMO Res A.688(17)
2. CAL TB 106 for coverings and CAL TB 117 for fillings
3. CAL TB 129
4. UL 1895

Pass/fail criteria for these tests are listed in table 1.2. Blankets, pillows, and sheets need not meet these requirements.

On passenger vessels, in all spaces, trash cans shall be noncombustible with no openings in the bottom or sides. Alternative arrangements may be permitted by the OCMI if an equivalent level of safety is maintained. The intent is to contain accidental ignitions to the first object ignited (the trash).

Requirements For Specific Compartments:

- Type 5 and 8 spaces must comply with 46 CFR 72.05-55. This basically includes case furniture and noncombustible framing of free standing furniture with no restriction on foam padding or upholstery fabrics.

- Type 5A spaces are a special option requiring fire resistant furniture and furnishings intended for very low fire risk spaces. The requirements for 5A spaces are described in section 6.7 of this circular.

- Type 2 and 3 must meet the same requirements as type 5 spaces with the additional requirement that foam padding and upholstery must also be fire retardant.

Restrictions on the amount of furnishings permitted in any of the above compartments (fire load) can be found in Chapter 7 of this circular. Table 2.1 summarizes the requirements for various compartments for fire load, furnishings, and finishes.

Acceptance of Materials:

Materials including foams, fabrics, and furnishings are not specifically approved under 46 CFR 164 and are not listed by Commandant. In general, test reports or certificates may be accepted by the OCMI or the MSC.

"Fire blockers" are also not specifically approved under 46 CFR Part 164 and should be tested under UL 1056 or Cal TB 133 for effectiveness but there is no requirement for their use. It is not acceptable to install a fire blocker in lieu of testing. Fire blockers are normally glass fiber fabrics placed over the foam padding but covered by the upholstery fabric. These materials have proven effective in protecting combustible foams from becoming involved in the fire and are often used in furnishings which are required to pass tests like UL 1056.

TYPE	FIRE LOAD	FURNISHING	FINISHES	COMMENTS
1	N/A	N/A	72.05-15	VOLUME AND THICKNESS LIMITATIONS APPLY TO THE INTERIOR FINISH
2	5 kg/sqm **	FULLY RESTRICTED 72.05-55	NONCOMBUSTIBLE OR 164.012	UPHOLSTERY AND PADDING MUST BE FIRE RETARDANT
3	5 kg/sqm **	FULLY RESTRICTED 72.05-55	NONCOMBUSTIBLE OR 164.012	UPHOLSTERY AND PADDING MUST BE FIRE RETARDANT
5	15 kg/sqm	PARTIALLY RESTRICTED 72.05-55	NONCOMBUSTIBLE OR 164.012	NONCOMBUSTIBLE FRAMES AND CASE FURNITURE ARE REQUIRED
5A	5 kg/sqm	FULLY RESTRICTED 72.05-55	NONCOMBUSTIBLE OR 164.012	UPHOLSTERY AND PADDING MUST BE FIRE RETARDANT
6	37.5 kg/sqm *	NO RESTRICTIONS	72.05-15	VOLUME AND THICKNESS LIMITATIONS APPLY TO THE INTERIOR FINISH
7	37.5 kg/sqm *	NO RESTRICTIONS	72.05-15	VOLUME AND THICKNESS LIMITATIONS APPLY TO THE INTERIOR FINISH
8	15 kg/sqm **	NO ++ RESTRICTIONS	NONCOMBUSTIBLE OR 164.012 ++	NONCOMBUSTIBLE FRAMES ++ AND CASE FURNITURE ARE REQUIRED
9	N/A	NO RESTRICTIONS	72.05-15	VOLUME AND THICKNESS LIMITATIONS APPLY TO THE INTERIOR FINISH

* WHEN LOCATED IN LONG MAIN VERTICAL ZONES THE LIMIT IS 15kg IN ACCORDANCE WITH NVIC 8-93

** THESE LIMITS ARE NOT REQUIRED TO BE CALCULATED BUT SHALL BE RECOGNIZED AS THE LIMITS NECESSARY TO MEET THE INTENT OF THE SPACE CLASSIFICATION

++ SEE ASSUMPTIONS IN SECTION 6.13

FIRE LOAD REQUIREMENTS BY SPACE TYPE (SUBH)

TABLE 2.1

	STAIRWAY AND CORRIDORS	HIDDEN SPACES	ACCOMMODATION AND SERVICE SPACE BULKHEADS
TANK VESSELS	164.012 MATERIAL	164.012 MATERIAL	ANY MATERIAL (2 mm MAX)
CARGO VESSELS	164.012 MATERIAL	164.012 MATERIAL	ANY MATERIAL (2 mm MAX)
PASSENGER VESSELS **	164.012 MATERIAL **	164.012 MATERIAL **	MATERIAL WHICH COMPLIES WITH 72.05-15 **
MOBILE OFFSHORE UNITS	164.012 MATERIAL	164.012 MATERIAL	ANY MATERIAL (2 mm MAX)

** THE TOTAL VOLUME OF COMBUSTIBLE MATERIALS MUST NOT EXCEED AN EQUIVALENT OF 2.5 mm VENEER ON THE COMBINED BULKHEAD AND CEILING AREA OF EACH COMPARTMENT IN ACCORDANCE WITH 46 CFR 72.05-15(C). IN SOME CASES SUCH AS TYPE 5 OR 5A SPACES OR STAIRS, CORRIDORS, AND HIDDEN SPACES, THE INTERIOR FINISHES SHALL MEET THE REQUIREMENTS OF 46 CFR 164.012 AND SHALL NOT HAVE COMBUSTIBLE TRIM, MOULDING, OR DECORATIONS.

INTERIOR FINISH REQUIREMENTS

TABLE 2.2

CHAPTER 3 CONSTRUCTION AND ARRANGEMENT

3.1 General Design Considerations

The following sections deal mostly with steel construction which has long been the primary material for the construction of ships. Much of the knowledge gained in SFP is from fire testing using steel construction. Steel has some inherent fire resistance because it is noncombustible and the melting point of steel is well above the maximum temperature it is expected to reach in the standard fire test after a one hour exposure and thus the steel will retain much of its strength. Under this assumption, the steel is essentially unaffected by the fire. Although this is not completely correct, it is a reasonable assumption for design purposes and has proven adequate over time for structures containing reasonable fire loads (less than or equal to 50 kgs per square meter and excluding large hydrocarbon fires).

These assumptions are implicit in the construction of steel ships and thus the following sections must be used cautiously when applying the discussion to other building materials or more severe fire hazards such as flammable liquids or gases. Construction materials such as aluminum or fiberglass are discussed in later chapters of this circular.

Unless specifically permitted, all construction of merchant vessels is required to be noncombustible.

3.2 Bulkheads

Ref: 46 CFR 32.57-5, 72.05-10, 92.07-5, 108.133, 116.415, 164.008, 164.009
Test ASTM E-119, IMO Res. A.754(18), IMO FTP Code

The most common core material for bulkhead and deck construction is steel plate. Coast Guard experience has shown that suitably stiffened steel plate of 3 mm thickness has an inherent fire endurance of at least one hour under the conditions simulated by the standard fire test. Suitably stiffened steel plate of 1.5 mm thickness has an inherent fire endurance of at least thirty minutes when subjected to the standard fire test. Without additional insulation, plates of these thickness' shall be classified as A-0 and B-0 respectively.

These determinations are based on large scale testing to the standard fire test which is considered to be representative of the postflashover burning regime. It should be noted that steel transfers heat rapidly and thus a bulkhead made from 3 mm steel may have integrity against the spread of flames for one hour but

the heat transfer through the bulkhead to adjacent combustibles could cause the fire to spread within minutes to adjacent compartments.

To provide further integrity with respect to heat transfer through the barrier, composite arrangements involving thermal insulating materials are often required. There are basically two ways to achieve this integrity with steel as the composite core material:

1. Application of approved structural insulation

2. Application of approved bulkhead panels

Since the performance of the steel plate has been proven, all that generally needs evaluation are the thermal properties of the structural insulation and bulkhead panels.

Table 3.1 shows the specific requirements for each classification of bulkhead. The steel thickness requirements shown in the table are based on Coast Guard testing but alternative dimensions may be used if the engineer can prove through performance that the assembly meets the rating requirement while maintaining structural integrity. This would be accomplished by testing the assembly in the standard furnace. When performing the standard fire test, bulkheads shall be tested without interior surface finishes.

BULKHEAD CLASS	REQUIREMENTS
C-CLASS	NONCOMBUSTIBLE * CONSTRUCTION
B-0	30 MINUTE TEST NO PASSAGE OF FLAME 1.5 mm THICK STEEL AND SUITABLY STIFFENED
B-15	B-0 REQUIREMENTS PLUS 15 MINUTES THERMAL CRITERIA 140/225 ^{o}C
A-O	60 MINUTE TEST NO PASSAGE OF FLAME OR SMOKE 3 mm THICK STEEL AND SUITABLY STIFFENED
A-15	A-0 REQUIREMENTS PLUS 15 MINUTES THERMAL CRITERIA 140/180 ^{o}C
A-30	A-0 REQUIREMENTS PLUS 30 MINUTES THERMAL CRITERIA 140/180 ^{o}C
A-60	A-0 REQUIREMENTS PLUS 60 MINUTES THERMAL CRITERIA 140/180 ^{o}C

* ALL CONSTRUCTION OF CLASSIFIED DIVISIONS SHALL BE NONCOMBUSTIBLE CONSTRUCTION

BULKHEAD REQUIREMENTS

TABLE 3.1

The fire integrity of the construction is known as the "F" rating, or "structural criteria", and measures the structure's resistance

to the passage of flame and/or smoke. The performance associated with the insulation's resistance to temperature rise is known as the "T" rating as discussed in section 2.5. Adding insulation increases the T-rating of the bulkhead but has little affect on the F-rating when the core is steel.

Although "F" ratings are directly comparable and "T" ratings are directly comparable, the combination of the two makes it difficult to directly compare the overall performance of differently rated structures. For example, it is not possible to say that an A-0 structure is better than a B-15 structure. Trivial comparisons can be made for example between an A-15 and a B-15 but in general it is the Coast Guard policy not to make comparisons or substitutes for the structural fire protection bulkhead requirements in 46 CFR.

When insulation is applied to bulkheads, the insulation shall be applied over stiffeners and closely fitted around other protrusions. The insulation of a bulkhead shall extend over any protrusions out to 30 cm normal from the bulkhead. For protrusions that are fully wrapped, such as small stiffeners, the insulation thickness need only be half of what is required for the bulkhead. For protrusions that are not fully covered because they extend out more than 30 cm such as deep webs, pipes, cables, or vent ducting, the insulation shall be the same thickness as the bulkhead insulation out to a distance of 30 cm. See figure 3.1(a) and (b) for details.

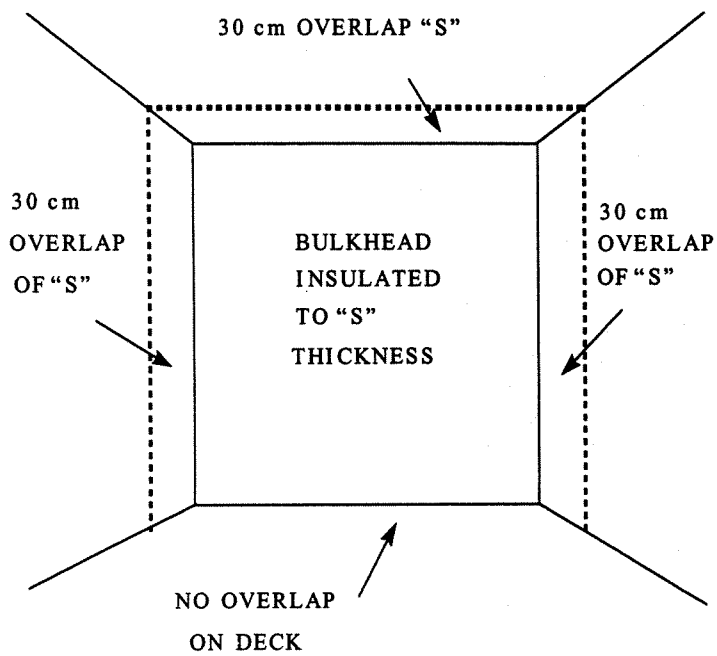

INSULATION OVERLAP REQUIREMENTS

FIGURE 3.1(a)

When the bulkhead is a corrugated design or incorporates some small irregularities, the insulation should conform to the surface. Stiff insulation may be placed on the corrugated surface leaving air gaps. This would be considered a conservative approach because of the beneficial insulating affects of the air gaps. The corrugation should NOT be treated as small stiffeners with the half-thickness allowance.

Bulkhead to bulkhead joints and bulkhead to overhead joints shall be overlapped for a distance of 30 cm at the full thickness of the insulation. Bulkhead to deck connections need not extend the insulation. The reason for this exception is that the difficulty associated with this task is not justified given the reduced fire attack expected in the lower edges of the compartment of origin.

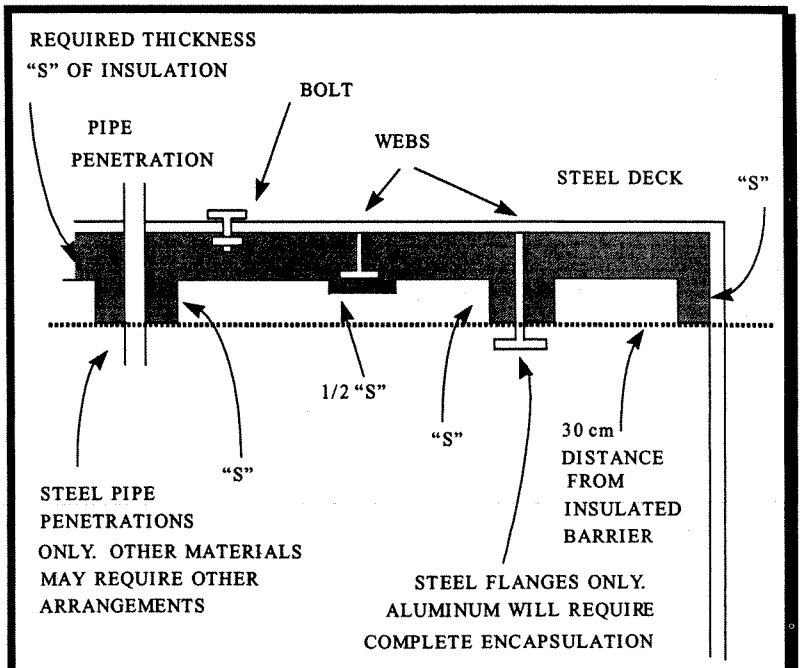

INSULATION OVERLAP REQUIREMENTS
FIGURE 3.1(b)

A-Class Bulkheads:

A-class construction shall be composed of steel or equivalent material, suitably stiffened, and made intact with the main structure of the vessel. This statement implies that the assembly will retain structural integrity after the fire exposure and retain load bearing capability if so designed.

Structural integrity means that the assembly will not fall under its own weight nor will it crumble or break upon "normal" contact after exposure to the fire. This is usually tested with a hose stream test or a hammer test after the standard fire test.

As a minimum prescriptive construction standard (not requiring testing), steel plating shall be a minimum 3 mm thickness, suitably stiffened, and all connections shall be tight fitting.

A-class requirements include 60 minute F-rating which involves resistance to the passage of flame and smoke. This is measured by visual observation during testing. If during the furnace test, it is suspected that hot gases are passing through the bulkhead then a piece of cotton waste is placed near the suspected area and if it is ignited then the passage of hot gases or flame is confirmed.

For A-class construction, the T-rating is measured as the average temperature rise (from all thermocouple locations on the unexposed side of the bulkhead) of 140°C above ambient and also a single maximum reading from a thermocouple located on the unexposed side of 180°C above ambient. This second criteria represents joints or fittings that may cause slightly higher local temperatures.

Figures 3.2a through 3.2e detail bulkhead arrangements that are acceptable for the given A-class rating without a need to perform a standard fire test. Any other arrangements must be tested for the desired rating. These arrangements apply only to steel construction.

LEGEND:

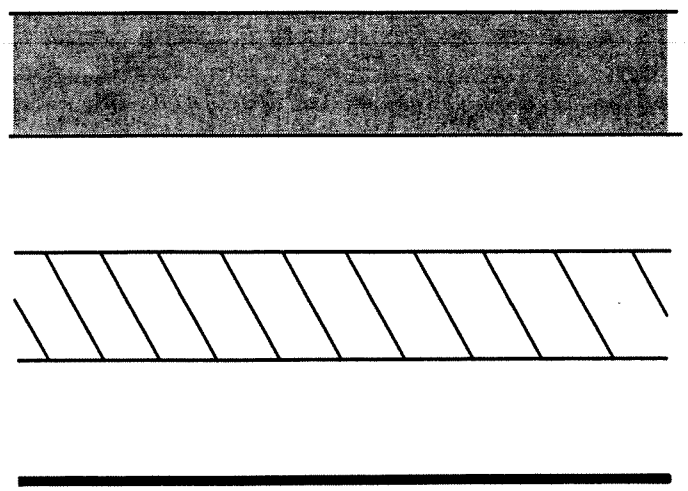

APPROVED STRUCTURAL INSULATION "S" (46 CFR 164.007)

APPROVED BULKHEAD PANEL "P" (46 CFR 164.008)

3 mm STEEL PLATE

S = THICKNESS OF APPROVED STRUCTURAL INSULATION TO MEET CLASS A-60 REQUIREMENTS WITHOUT OTHER INSULATING MATERIALS.

P = THICKNESS OF APPROVED BULKHEAD PANEL TO MEET CLASS B-15 REQUIREMENTS. THE USE OF FRACTIONAL VALUES OF "P" WILL BE ACCEPTED FOR HOMOGENEOUS MATERIALS ONLY. ALSO, SEE 46 CFR 164.008-2 (b) AND (c) FOR SPECIFIC REQUIREMENTS.

AIR SPACES SHALL BE A MINIMUM OF 2.5 cm. IN MOST CASES, PLATE STIFFENERS ARE DEEPER THAN 2.5 cm AND THUS STIFFENER DEPTH IS THE CONTROLLING FACTOR

INSULATION ARRANGEMENTS

FIGURE 3.2(a)

A-60 CLASS BULKHEADS

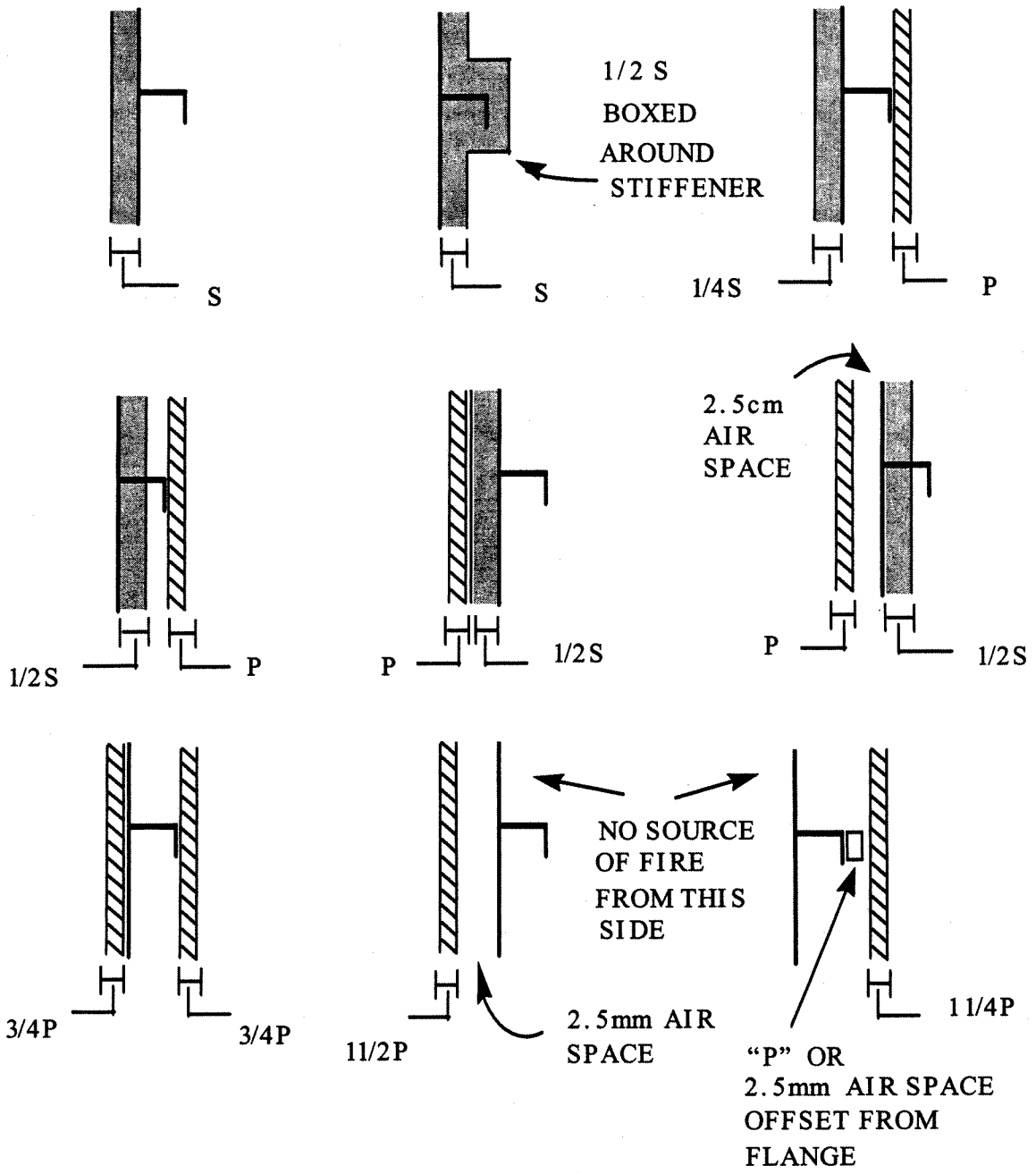

INSULATION ARRANGEMENTS

FIGURE 3.2(b)

A-30 CLASS BULKHEADS

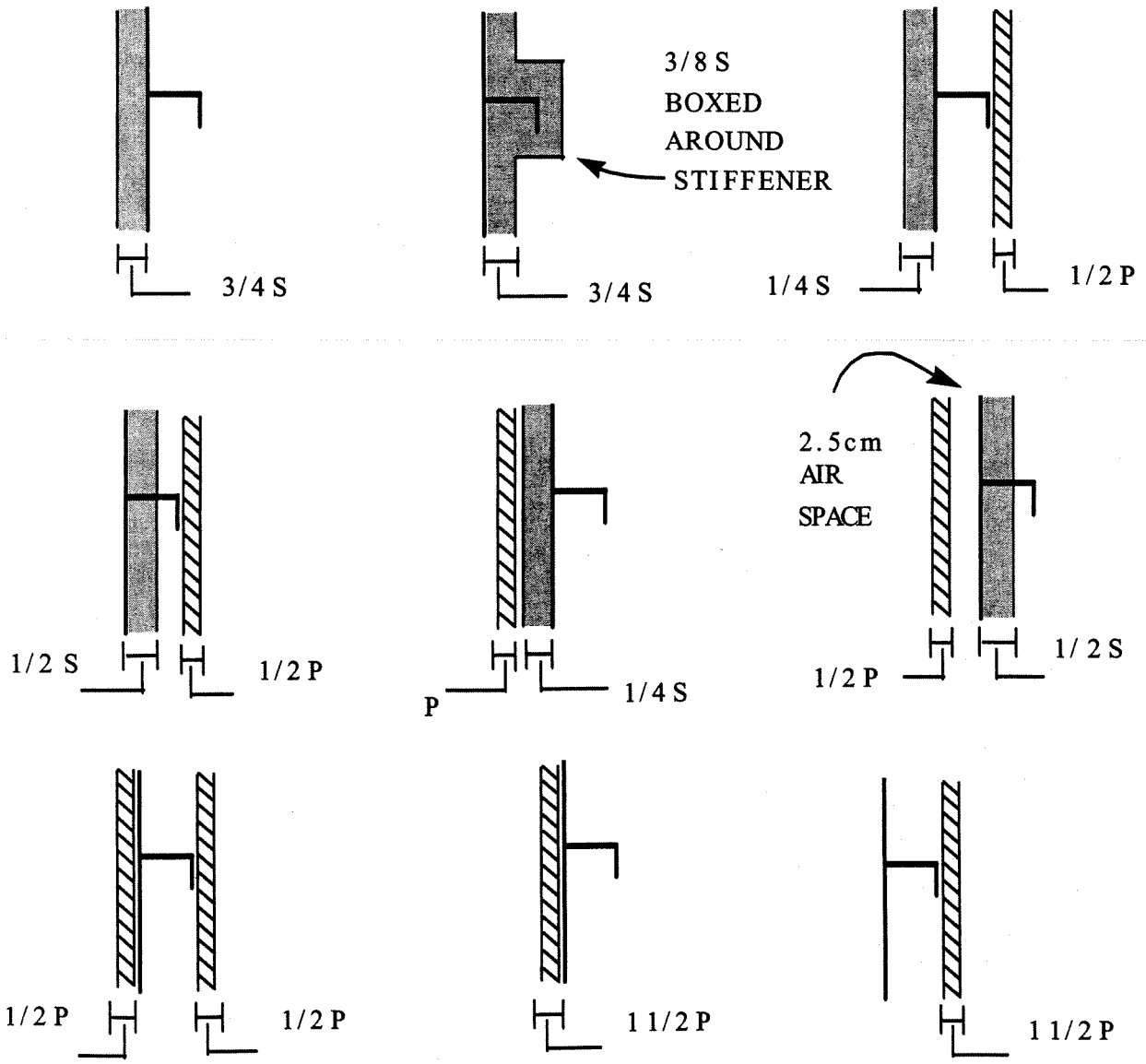

INSULATION ARRANGEMENTS

FIGURE 3.2(c)

A-30 CLASS BULKHEADS

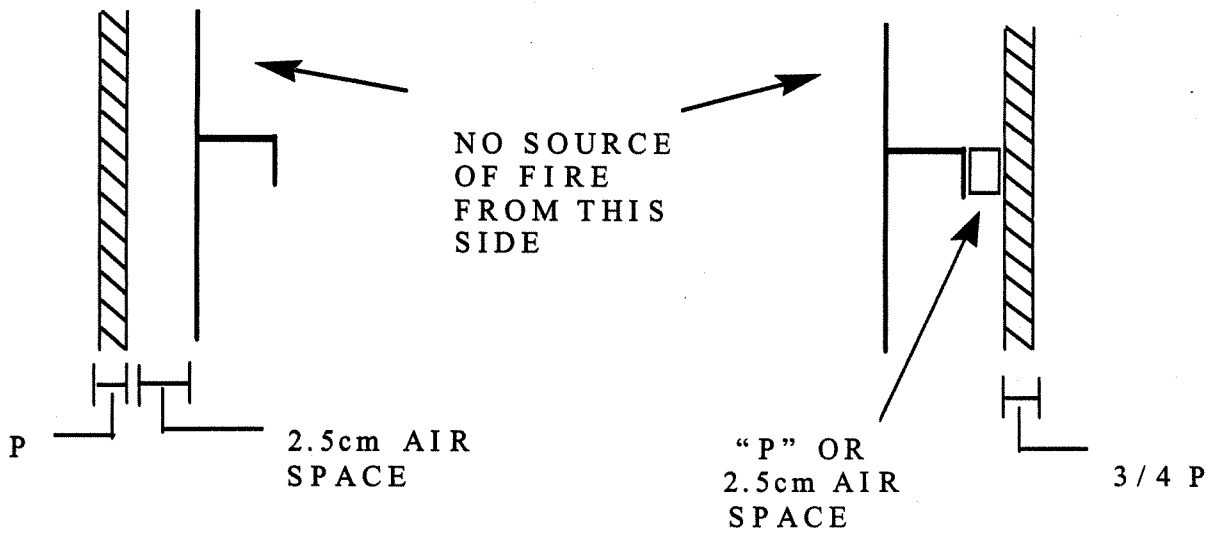

INSULATION ARRANGEMENTS

FIGURE 3.2 (d)

A-15 CLASS BULKHEADS

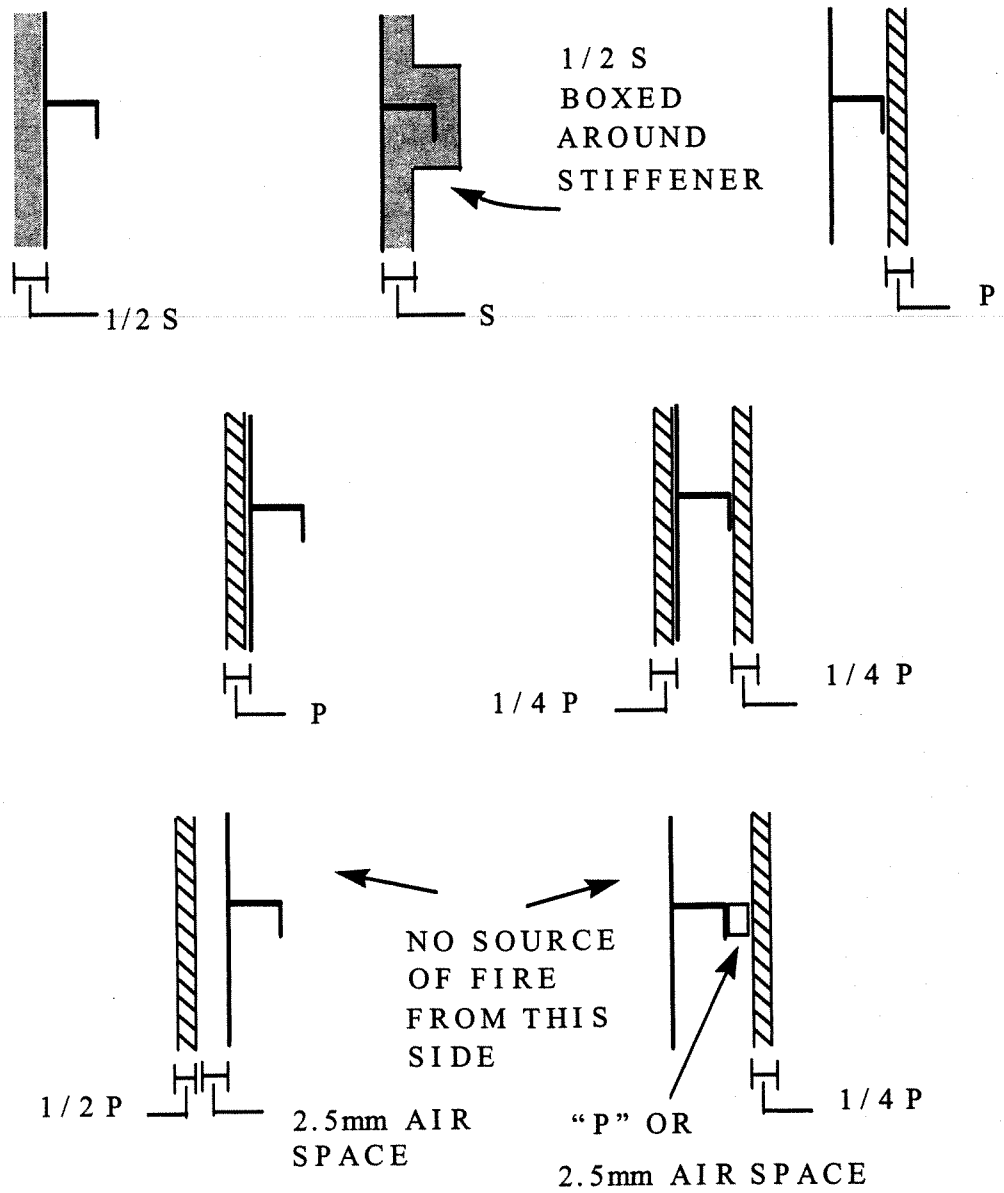

INSULATION ARRANGEMENTS

FIGURE 3.2(e)

B-Class Bulkheads:

B-class construction shall be composed of noncombustible material, suitably stiffened, and made intact with the main structure of the vessel or a continuous ceiling assembly. These structures are not usually load bearing and do not need to retain structural integrity after the fire exposure unless specifically designed to be load bearing.

As a minimum prescriptive construction standard (not requiring testing), steel plating shall be a minimum 1.5 mm thickness, suitably stiffened, and all connections shall be close fitting.

B-class requirements include a 30 minute F-rating which includes resistance to the passage of flame but does not make any requirements with respect to smoke. This is because B-class connections are only required to be close fitting.

The thermal criteria include a maximum average temperature rise of 140°C and a single location temperature rise of 225°C. Note that the single point criteria for B-class construction is different than for A-class construction while the average temperature rise criteria is identical. The reason for this is that B-class construction allows for the passage of smoke through small gaps which can be very hot and would otherwise cause failure at a single location using the more stringent criteria of 180°C.

46 CFR 72.05-10(i) states that where B-15 bulkheads are required to extend to the deck above, the portion of the bulkhead within the void space above ceilings need only meet B-0 requirements. The following guidance with respect to the extension of the B-0 class bulkhead above the ceiling applies:

1. When the ceiling is C-class, the B-class bulkheads must always extend deck-to-deck although B-0 construction is acceptable in the concealed space above the ceiling in accordance with 72.05-10(i).

2. When the ceiling is constructed of B-class panels according to 46 CFR 72.05-10(j), then the B-class bulkheads may terminate at the ceiling except at corridor bulkheads in which case 46 CFR 72.05-10(i) applies.

3. When the ceiling is an approved continuous assembly in accordance with 46 CFR 164.010, then all the B-class bulkheads may terminate at the approved ceiling assembly.

In any case, the ceiling must be at least the same rating as the bulkhead in order for the bulkhead to terminate at the ceiling and the ceiling can only terminate at barriers of at least the same integrity of the ceiling and these barriers in turn must extend from deck-to-deck.

B-class steel bulkhead designs can be based on diagrams 3.2(a) and 3.2(e) using 1.5 mm steel. B-class panels (not made of 1.5 mm steel) must be approved through fire testing according to 46 CFR 164.008.

C-Class Bulkheads:

These bulkheads do not need to have any structural fire protection integrity. The only requirement is that the bulkheads be noncombustible and thus not add to the fire. In reality, any noncombustible barrier will provide some resistance to the spread of fire and smoke, especially when it extends from deck to ceiling.

Glass, steel (sheet metal), or aluminum are all considered C-class construction without need for testing noncombustibility.

C-Class Smoke Tight Bulkheads:

These bulkheads are made of noncombustible material like C-class divisions but are required to prevent the passage of smoke. The construction standard for a C-class smoke tight division requires that all fixtures, connections, and penetrations be tight fitting similar to A-class construction methods. Care should be taken to ensure that all penetrations are properly fitted and sealed with noncombustible materials. In most cases, C-class smoke tight construction will involve overlapped parts or the addition of approved fire stop sealants around fittings and penetrations.

Partitions:

The determination of what constitutes a partition (vs. a bulkhead creating a separate space) is based on egress requirements and is not specifically a structural fire protection issue. In any event, partitions shall be of noncombustible construction in accordance with 46 CFR 72.05-15(f) and surface finishes shall meet the same requirements as the compartment that they are within. Partitions should not be used to circumvent the SFP requirements for divisions.

Side Shell Boundaries:

The hull and superstructure of the vessel is required to be steel or equivalent. Since the definition of a type 13 space in 46 CFR does not include the open air space bounding the hull of the vessel to the waterline (SOLAS does include this), there is no requirement that the hull be fire rated.

However, the requirement for steel construction is intended to ensure the hull and superstucture, which are load bearing, will continue to support the rated decks and bulkheads within the ship for the required 60 minutes.

To this extent, there is no requirements for fire integrity other than structural integrity (load bearing capability). Openings are therefore not restricted in such boundaries except that a design shall have due regard for the possibility of flame spread to openings above or to refuge/safety areas. Sections 3.11 and 3.19 of this circular give specific guidance on openings in the side shell and superstructure.

3.3 Bulkhead Panels and Linings
Ref: 46 CFR 72.05-10(h) through (J), 164.008
Test ASTM E-119, E-84, IMO Res. A.653(16)and A.754(18)

Bulkhead Panels:

Bulkhead panels are used as C-class and B-class divisions or as components of A-class divisions. Bulkhead panels are tested to the performance specifications of 46 CFR 164.008 usually resulting in classification as B-0 or B-15. This test is also a standard fire test and is intended to test the panel and its joinerwork as a complete system.

When bulkhead panels are used as components of A-class construction, the performance of the complete assembly shall be tested using the standard fire test or comply with figure 3.2 or figure 3.3. See section 3.6 (Non-combustible Composite Arrangements) for more details as to the requirements for such assemblies. As a prerequisite, the panel must be noncombustible (164.009) and will then be C-class by definition.

Testing according to 46 CFR 164.008 will result in a panel and framework that has specific approval and is listed in the Coast Guard Equipment List. Variation from these specifications during construction and outfitting is prohibited. Designs shall incorporate good marine practice such as the use of washers or backing plates when connecting panels to framing; and, sufficient overlap of the frame to prevent panel movement. Submission of plans for approval requires detailed drawings including:

1. Sufficient number of vertical sections extending from deck to overhead showing all pertinent installations. Separate details should be shown for all variations. Details should clearly depict the following:
   a. base and overhead fixation of basic panels
   b. Ceiling or lining attachments
   c. Draft stop attachments

d. Basic dimensions and thickness for panels/fittings
e. Type, size, and spacing of bolts, screws, and fittings

2. Sufficient number of horizontal sections. Details should clearly depict the following:
a. Two bulkheads joining at a TEE
b. Two bulkheads joining at a BUTT
c. Four bulkheads joining at a CROSS
d. Outside corner
e. All variations of door jams
f. Bulkhead lining and connection detail

Linings:

Linings such as suspended ceilings are structural components (although not necessarily load bearing) usually used for aesthetics and are required to be noncombustible. Linings are often manufactured with surface finishes which shall meet the surface flammability requirements of 46 CFR 72.05 and/or 164.012 as required.

Material Requirements (panels and linings):

As stated above, bulkhead panels and linings are part of the construction, although usually not load-bearing, and are required to be noncombustible. All furring, framing, and fittings incidental to the construction of bulkhead panels and linings must also be noncombustible.

It should be noted that "standard" acoustical ceiling panels and paper faced gypsum board are not specifically allowed nor disallowed for this purpose, although it is unlikely these materials will pass the non-combustibility requirement of 46 CFR 164.009 or the applicable surface flame spread requirements.

When testing these materials for shipboard use, it is important to differentiate between the surface finish and the primary construction material because the construction material must be noncombustible. In fact, it is required that testing in the standard furnace be accomplished with no additional surface finishes applied. Surfaces of composite construction that cannot reasonably be removed without degrading the structural strength of the core shall be considered part of the structure and not as a surface finish.

As an example, Paper-faced gypsum board is constructed with gypsum compressed between paper faces. The paper cannot reasonably be removed and still have a usable gypsum structure. For this reason, the paper face cannot reasonably be considered a

finish but instead must be considered as part of the construction and thus must be noncombustible. Many of these "as manufactured" panels are painted after construction. In this case the paint is the surface finish which further supports the disqualification of paper-facing as a surface finish.

When ceiling panels are used as a lining for the overhead deck assembly, the suspending mechanism may incorporate bolted or snap-in fittings of reasonable tightness. Such fittings shall be noncombustible and should not fail early in the fire. Gravity systems incorporating "T" sections and individual panels are acceptable providing sufficient surface area is provided to hold the panel in place. The concern is that during a fire the panel will be heated and sag, possibly falling from its frame. As a practical test to get some idea as to the potential weakness of the structure, the inspector can gently hit the panel upwards and expect that it will not fall to the deck regardless of how it re-orients itself in the frame.

Lining materials need not be rated nor approved when they do not form part of the barrier rating, but in all cases, these linings and incidental construction shall be noncombustible.

Fittings and Fixtures:

Bulkhead panels and linings are usually manufactured without penetrations for lights, receptacles, switches, controls, etc. In practice, these panels and linings contain many such fittings which could degrade the integrity of these structures. It is critical that any construction classified as A-class or B-class be tested with such fittings in place.

If this is not practical because of the numerous possible arrangements of such fittings then a panel with representative fittings should be tested. This should include a light fixture and ventilation diffuser for overhead assemblies. For bulkhead assemblies, this should include a light switch and electrical receptacle.

If such fittings are of combustible construction then a steel casing shall be provided behind the fitting, completely enclosing it and securely attached to the back side of the panel or lining.

3.4 Main Vertical Zone Bulkheads (MVZ's)
Ref: 46 CFR 72.05-5(h), 116.415(d), 164.009
Test ASTM E-119, IMO Res. A.754(18)

The purpose of these divisions is to subdivide the vessel into independent fire zones that can contain the fire to a general section of the vessel while providing protection to the

passengers and crew in another section. It is intended that these barriers be continuous and aligned from the keel through the superstructure.

Another, and often overlooked benefit, especially on larger passenger vessels, is the functional (simple and comprehensive) division of the ship's complex structure as well as zoning of electrical, ventilation, fire door, sprinkler, and smoke detector systems, all of which must be subdivided or zoned for proper operation and ease of control.

Construction:

The thermal insulation requirements for interior MVZ boundaries, in general, are more stringent than non-MVZ bulkheads. Penetrations of these structures shall be kept to a minimum especially with respect to ventilation. Windows in general, are not permitted in such divisions as outlined in section 3.11.

Length of an MVZ:

The maximum length of any MVZ shall not, in general, exceed 40 meters. Any MVZ in excess of 40 meters is considered a long MVZ (LMVZ). An LMVZ is permitted under the following conditions:

- The maximum length of a main vertical zone may be extended for the purpose of alignment with corresponding watertight subdivisions. It is expected that this arrangement provides an equivalent level of safety within limits of extension to 10 percent of the normal maximum of 40 meters for a total length of 44 meters. If an MVZ bulkhead is extended for this purpose then it is expected that the MVZ bulkhead shall be in alignment without the use of steps.

- The maximum length of a main vertical zone may also be extended for certain vessels incorporating additional fire protection measures as outlined in NVIC 8-93.

- Subchapter K vessels may extend the MVZ to 44 meters at the discretion of the Commanding Officer, Marine Safety Center after a determination is made that the arrangement does not degrade the level of safety.

It should be noted that SOLAS allows an extension for alignment or for large open spaces up to 48 meters. This allowance was developed in recognition of the addition of sprinklers and smoke detection systems throughout the vessel. MVZ's may be extended to 48 meters (as described in SOLAS) if the vessel is fully sprinklered and fitted with fire detection and alarm systems equivalent to SOLAS requirements.

Measurement:

The definition of an MVZ in 46 CFR 72.05-5(h) states that measurement is based on a per-deck basis. However, the regulations assume that MVZ divisions are predominantly aligned in the vertical direction. The use of large steps and offsets invalidates this assumption and necessitates the measurement of the MVZ length from the after most bulkhead or offset to the forward most bulkhead or offset. These locations do not need to be on the same deck. Steps and recesses shall not exceed 20 percent of 40 meters (8 meters) regardless of the length of the MVZ and shall be constructed in accordance with 46 CFR table 72.05-10(f) or the requirements of Subchapter K as applicable. Stair towers shall be considered to be within a zone for measurement purposes or considered to be a zone themselves if of substantial area, usually from beam to beam and keel to superstructure as may be approved by the Marine Safety Center during plan review.

3.5 Decks
Ref: 46 CFR Table 72.05-10(g), 116.415(c), 164.009
Test ASTM E-119,

Decks shall meet the same minimum construction standard as required for bulkheads in section 3.2. The fire testing for decks is accomplished in the same standard fire test used for bulkheads, except that the deck assembly is mounted in the horizontal position. There is the inherent requirement that the deck be structurally capable of supporting itself during the fire test. However, other loading requirements as set forth by the class society, etc. will normally require structural integrity well beyond that required in the furnace test.

The insulation of decks for fire protection purposes can be accomplished by any one or a combination of the following four methods:

1. Insulation applied to the underside of the deck
2. Suspended ceiling assembly on the underside of the deck
3. Approved deck covering on the topside of the deck, or
4. Approved floating deck assemblies (164.005)

Deck underside insulation:

Insulation approved under 46 CFR 164.007 may be applied to the underside of the deck in the thickness and by methods as described for bulkhead assemblies or as recommended by the manufacturer for deck underside installations. For steel decks,

underside insulation will be sufficient when the fire hazard is from below or above.

Deck insulation shall fit tightly around any posts or standoffs used to secure cables and piping to the overhead but need not extend over the pipe or cable tray itself. Insulation shall be fitted behind ducting and under cable trays. It is unacceptable to consider that the tray or duct will act as insulation for the deck underside. Posts or columns shall be insulated for a distance of 30 cm down from the overhead.

Suspended Ceiling Assemblies:

Composite deck structures involving approved ceilings may also be used to provide the required rating and are effective against fire hazards on either side of steel deck assemblies. Ceilings used for rating purposes must be constructed using approved bulkhead panels or a specifically approved B-class ceiling assembly which are tested for fire integrity. See section 3.7 for specific construction details

Deck Coverings:

Materials approved under 46 CFR 164.006 can be used as a deck covering to provide the required thermal insulation as outlined in section 2.8 of this document. Deck coverings may be used in conjunction with insulation or suspended ceilings. In this case, composite arrangements shall be constructed in accordance with figure 3.3(a) through (d). Other variations may be accepted providing performance is proven using the standard fire test.

Approved Floating Deck Assemblies:

These assemblies involve the use of rigid insulation applied to the top side of the deck with steel plating fitted over top of the insulation which "floats" on the insulation. These assemblies are specifically approved under 46 CFR 164.005 (to be incorporated). The approval ensures that the materials and construction details meet the required performance including durability and good marine practice.

LEGEND:

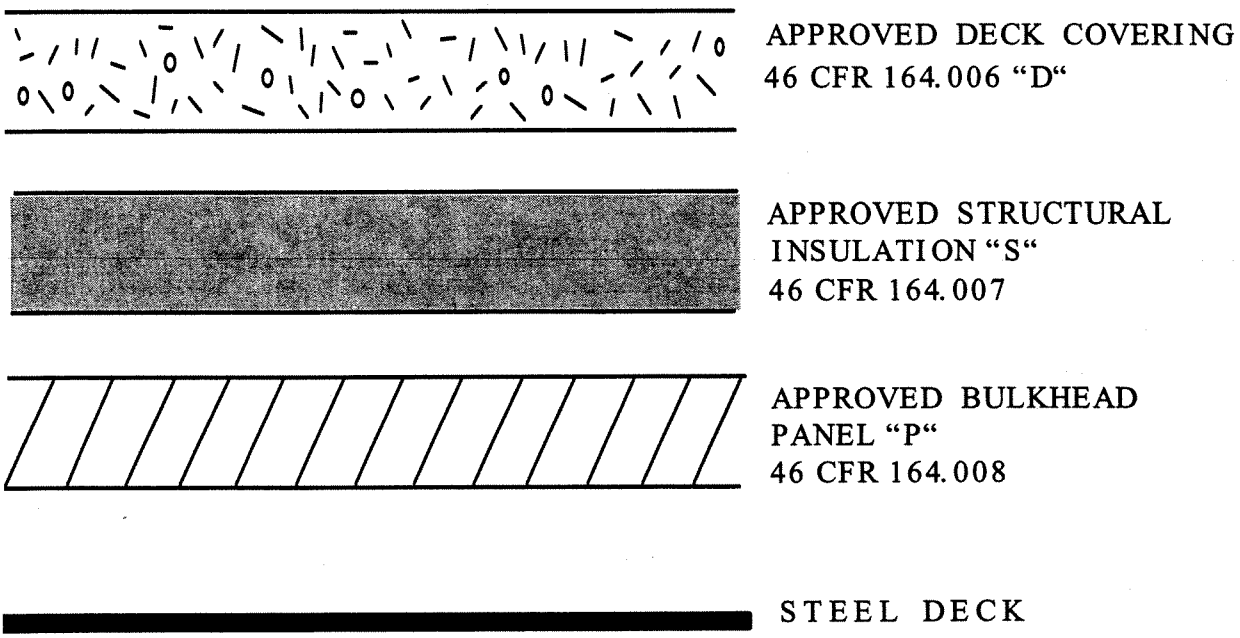

D = THICKNESS OF APPROVED DECK COVERING TO MEET CLASS A-60 REQUIREMENTS WITHOUT OTHER INSULATING MATERIALS

S = THICKNESS OF APPROVED STRUCTURAL INSULATION TO MEET CLASS A-60 REQUIRMENTS WITH OUT OTHER INSULATING MATERIALS

P = APPROVED BULKHEAD PANEL MEETING CLASS B-15 REQUIREMENTS

INSULATION ARRANGEMENTS

FIGURE 3.3(a)

CLASS A-60 DECKS

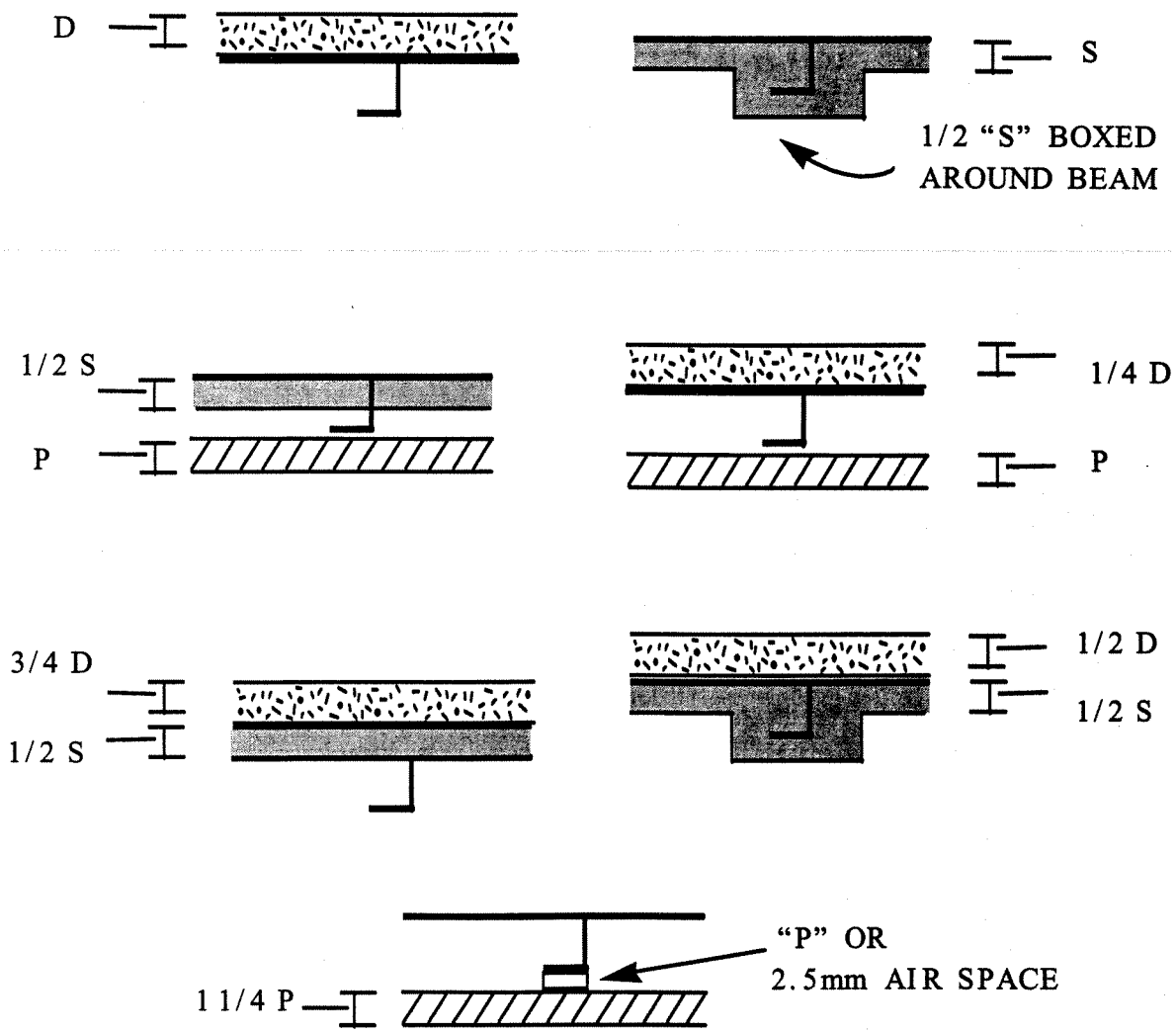

INSULATION ARRANGEMENTS

FIGURE 3.3(b)

CLASS A-30 DECKS

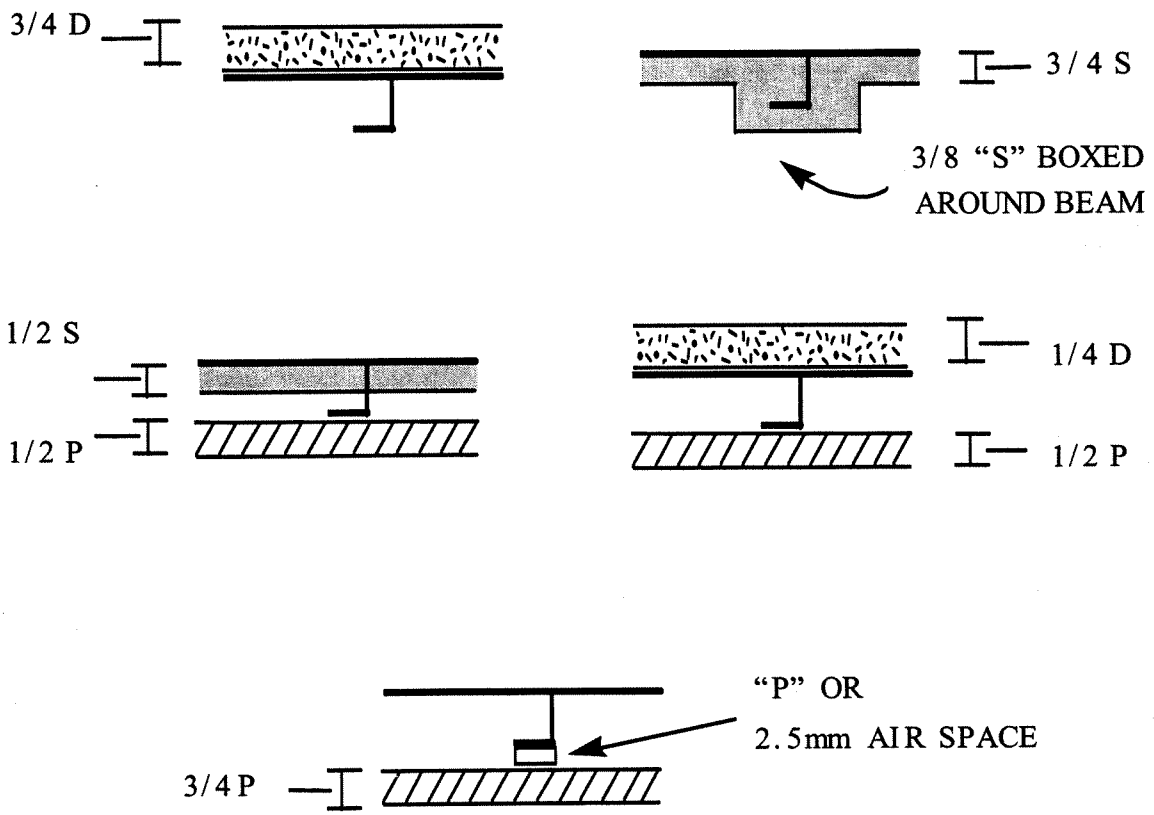

INSULATION ARRANGEMENTS

FIGURE 3.3(c)

CLASS A-15 DECKS

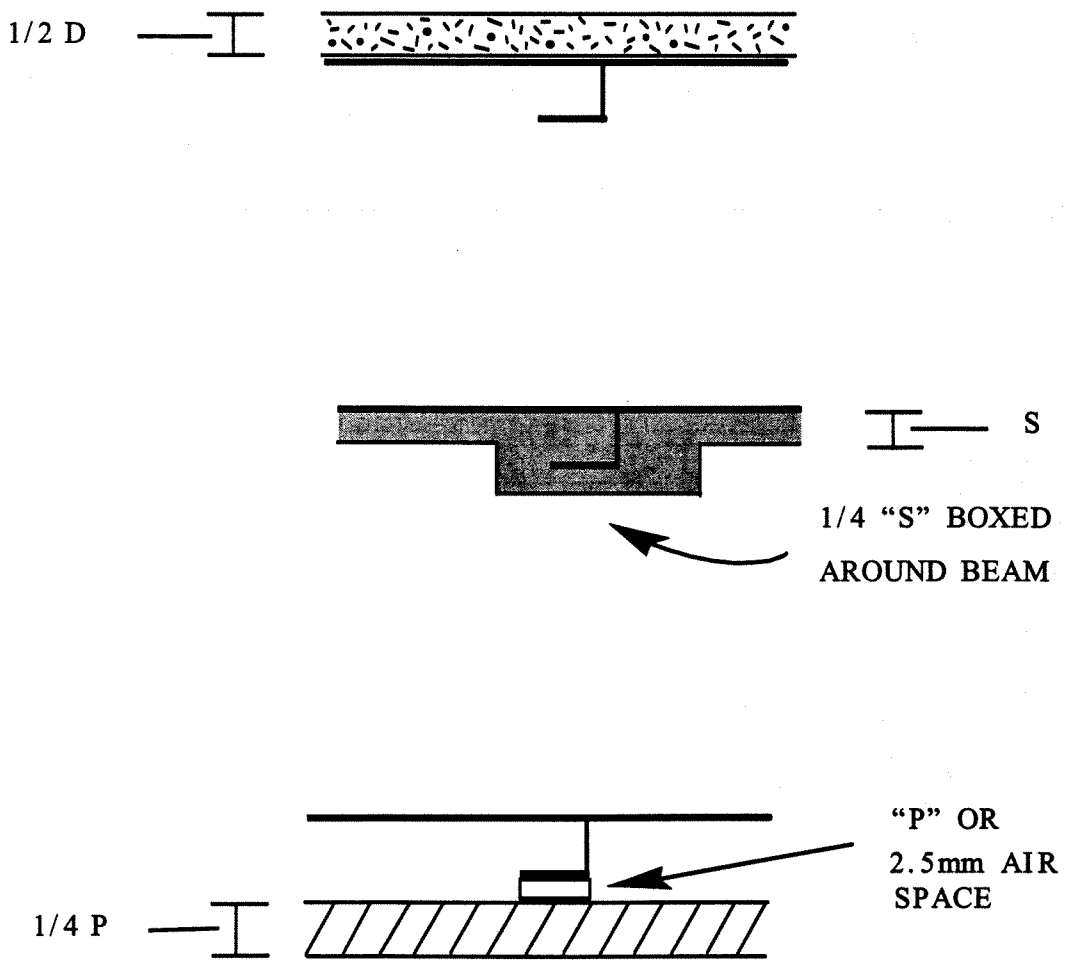

INSULATION ARRANGEMENTS

FIGURE 3.3(d)

3.6 Noncombustible Composite Arrangements
Ref: 46 CFR 164.008-2
Test ASTM E-119

In some cases it is cost effective to use a bulkhead lining to improve the bulkhead rating similar to the practice of using approved ceiling assemblies to obtain a specific deck rating. 46 CFR 164.008-2(b)-(c) describe minimum requirements for bulkhead panels that will be used in noncombustible composite structures to obtain a specific rating. The intent of these specific requirements is to ensure that the panel is more than simply a sacrificial member of the structure.

Alternatives to this very prescriptive policy may be accepted based on performance demonstrated by the manufacturer accounting for the piping, ducting, or wiring which may be located within, or pass through, the assembly. Wiring and piping are permitted in the concealed spaces created by an approved composite structure. The Coast Guard Equipment List has approved panels rated as B-15 which may be used in A-60 construction and it is envisioned that numerous arrangements could meet the performance criteria for A-class or B-class divisions when tested in the standard fire test.

In any case, the construction shall always be noncombustible and follow the general requirements for construction practices for A-class and B-class structures as outlined in other sections of this circular.

3.7 Continuous Ceilings
Ref: 46 CFR 164.010 (to be incorporated)
Test ASTM E-84, E-119, IMO FTP Code

As discussed above, suspended ceilings may be used as components of rated barriers provided they are approved as continuous B-class ceiling or are constructed from approved bulkhead panels.

Use of Traditional Bulkhead Panels:

Bulkhead panels may be used as a ceiling to achieve a specific deck rating as described in section 3.5 and 3.6. However, using bulkhead panels as ceiling linings requires special consideration to ensure the assembly will remain intact in the horizontal position and that the ceiling to bulkhead joints have integrity. This is not inherent since these panels are normally approved in the vertical orientation under 46 CFR 164.008. Specific approval is required during plan review to ensure the retaining system is sufficiently engineered for horizontal applications.

Approved Continuous Ceiling Assemblies:

Since these assemblies are complex and case-by-case approval during plan review would prove tedious, the Coast Guard has developed a draft Subchapter Q specification under 46 CFR 164.010 (to be incorporated). Unlike the use of traditional bulkhead panels as discussed above, these approved assemblies are evaluated during the approval process and then listed in the Coast Guard Equipment list. This saves time during plan review as the reviewer only has to ensure the system has a current approval and the OCMI only has to ensure that the assembly is installed as approved.

Care shall be taken to ensure that the installation of all fixtures maintain the integrity of the ceiling assembly. Ceiling assemblies shall be tested with light fixtures (and possibly other fixtures) installed to ensure an accurate test of the assembly.

The use of continuous ceilings creates a concealed space and thus invokes certain other requirements in accordance with section 3.8 and 3.9 of this circular.

Allowances:

Where approved B-class continuous ceilings are used and extend on BOTH sides of a bulkhead then that bulkhead of equal or lesser classification may terminate at the ceiling. This includes corridor bulkheads. Section 3.3 discusses in more detail B-Class bulkhead termination with the use of different types of ceilings.

3.8 Concealed Spaces
Ref: 46 CFR 32.56-50(b), 72.05-15(d), 92.07-10(d)(9), 116.422(d), 164.012
Test ASTM E-84, IMO Res A.653(16)

The limitations on the use of combustibles within concealed spaces is intended to reduce the avenues of fire and smoke spread in areas that are difficult to detect or access. These spaces are also the location of most pipe and cable penetrations so that boundary integrity is of great concern.

Combustible veneers, trim, molding, and decorations are prohibited in concealed spaces by the requirements of 46 CFR 72.05-15. However, finishes approved under 46 CFR 164.012 may be used accordingly.

Insulation on pipes, ventilation ducting, and electrical cables shall comply with section 2.6 of this circular.

Beverage Distribution Systems:

When the fluid is less than 80 proof (i.e. beer and wine) then plastic pipe may be used in accordance with the conventional requirements for plastic pipe. As an option, beer and wine lines may be made of any material if they are completely wrapped in approved structural insulation having at least 15 minutes of thermal integrity. With either option, combustible insulation may be used around the tubing only if it is itself fully wrapped in approved insulation having at least 15 minutes of thermal integrity. Regardless of construction, penetrations of bulkheads shall be an approved arrangement.

When the fluid is 80 proof or greater it is considered flammable. In this case, metallic pipe complying with 46 CFR Subchapter F shall be required. As an alternative, plastic may be used if it meets the following requirements:

- Be completely enclosed in an A-0 class enclosure. This enclosure should be sized appropriately to the tubing thus ensuring a conduit type arrangement. Steel pipe may be used.

- All locations where the lines penetrate the conduit shall be fitted with an A-0 class fire stop compatible with the tubing material.

- All places where the conduit crosses a structural division, the integrity of that division must be maintained with an appropriately constructed penetration.

- Thermal insulation on the beverage lines may be combustible only where the insulation is located inside the conduit.

- At the termination points of the conduit fire stops shall be fitted. The conduit at the termination shall extend to a flush position with the bulkhead panel or lining so as not to leave the lines unprotected in the concealed space for any distance.

It is recommended that designers address these issues specifically with the MSC early in the plan submission process.

Sources of ignition:

Some concealed spaces may contain or be directly adjacent to sources of ignition such as engine exhausts and galley uptakes. These sources of ignition shall be conservatively distanced from the limited combustible materials normally located in concealed spaces including veneers and cable insulation. No heat sources shall be in direct contact with combustible material. Heat

sources include combustion engine exhausts, galley exhausts, machinery space exhausts or heat tape or heating coils. Due consideration should be given to pyrophoric materials that may degrade or combust at relatively low temperatures (about 100° C) when exposed for long periods to these heat sources.

When properly insulated or separated during normal operation there should be little possibility of ignition. However, these spaces need occasional inspection to ensure the integrity of the insulation and the condition of the combustibles.

Miscellaneous Requirements:

- Draft stops shall be fitted in concealed spaces in accordance with section 3.9 of this document.
- Storage of combustibles is never permitted in concealed spaces.
- Concealed spaces are not given a space designation and are considered to be within the compartment they bound. Section 6.16 of this circular discusses concealed spaces around modules.

3.9 Draft Stops
Ref: 46 CFR 32.56-45, 72.05-10(h), 116.415(e)
Test ASTM E-119

Construction:

Draft stops shall be of B-0 class construction. They shall be close-fitting around penetrations thus minimizing gaps, and made from a rigid material such as 0.73 mm steel or an equivalent noncombustible material. Approved fire stop filler materials and fiberglass tape can be used to fill gaps around cables, pipes, or ducting which penetrates the draft stop. However, the method of filling shall have such integrity that it cannot be easily knocked loose during normal ship operation. Flexible plastic sheeting or fiberglass blankets are not acceptable as draft stops and masking tape or similar tape is not acceptable for covering gaps.

Locations:

In concealed horizontal locations (i.e. above ceilings) in accommodation spaces, service spaces, control stations, corridors, and stairways, draft stops shall be installed vertically every 14 meters in all directions (i.e. longitudinal and athwartship directions).

In concealed vertical locations (i.e. behind bulkhead panels) in the compartments mentioned above, draft stops shall be fitted horizontally at each deck but not greater than a maximum spacing of 4 meters. Draft stops need not be fitted at each landing in stairtowers between decks unless the spacing from the deck to the landing is greater than 4 meters.

Exceptions:

Draft stops are not required in concealed spaces above the ceilings of large public spaces if:

- The vessel has no overnight accommodations for passengers

- The public space is bounded completely by A-class barriers and/or the outer shell of the vessel

- The public space in question is open and unobstructed such that a fire in any part of the space will quickly be discovered

- The area above the ceiling is easily accessible from below for fire fighting purposes

- Combustibles in the space above the ceiling are limited to electrical cabling primarily for lighting circuits.

Practically speaking, with respect to draft stop requirements, a "large" space would be defined as one with a floor area having at least one dimension greater then 14 meters (corresponding to the maximum distance before draft stops are required).

An "open" space means that persons are generally aware or could easily be made aware of what is happening remote from their location within that space.

The requirement that the vessel have no overnight accommodations helps to ensure that the space is occupied during the entire voyage so that visual detection in the early stages of fire growth is likely. It is reasonable to assume such conditions on day/evening excursions in which the primary activities of the vessel center around the function of the large open space.

3.10 Doors
Ref: 46 CFR 32.57-10(d)(4), 72.05-25, 108.143, 116.435
Test ASTM E- 152, UL 10B IMO Res A.754(18)

The intent of this section is to explain the minimum prescriptive construction requirements (and also the underlying performance criteria) that will result in a door reasonably capable of maintaining the fire integrity of the bulkhead it penetrates.

This performance has been traditionally met through specific construction standards as outlined in 46 CFR 72.05-25. In practice, it is recognized that the door assemblies do not entirely meet the integrity of the bulkhead. In fact, these doors will not meet the requirements of SOLAS. This is partially justified by realizing that combustibles are not usually stored against the door and thus the possibility of igniting objects on the unexposed side of the barrier is somewhat diminished. This assumption may be invalid under certain conditions such as when people may be adjacent to the door. The designer should give due consideration to the limitations of doors constructed to the minimum prescriptive requirements.

Horizontal Fire Doors:

Horizontal fire doors are prohibited in passenger areas because of past safety problems not related to fire protection. Horizontal is defined as the plane in which the door is situated when in the closed position. This would be considered the deck of the vessel. These doors may be used in spaces accessible only to the crew following the restrictions outlined in 46 CFR 116.453.

These doors should not be confused with traditional vertical doors situated in bulkheads. Vertical doors may be sliding or hinged. Sliding doors usually slide horizontally while hinged doors rotate around a vertical axis. It is common to hear the term "horizontal sliding fire door" which means a traditional vertical door (located in a bulkhead) which slides open and closed in the horizontal direction (sideways).

Door installation:

The installation of the door and its frame shall be consistent with the performance expected of the door assembly itself and the general construction practices as discussed in section 3.2. For example, an A-class assembly may either incorporate a continuous butt-weld of the frame to the bulkhead or may use an overlapping frame with a non-continuous weld or bolts. If bolts or a non-continuous weld is used on the door frame flange then the flange must have sufficient overlap and tightness to ensure the assembly is "tight fitting" as defined in section 1.3 of this circular. As a general rule, if light can be seen through the joint in the door frame and the bulkhead then the installation is unacceptable. B-class installations shall be close fitting. SNAME TB 2-21 (pg. 14) gives guidance for attaching steel frames in aluminum bulkheads. This of course, does not circumvent other construction requirements that may be necessary for watertight installations.

Decorative doors shall not interfere with the proper operation of any fire-rated door assembly. It is not acceptable to assume

that decorative doors can be opened in the opposite direction of the flow of persons during evacuation.

Doors may be covered with veneers consistent with the applicable bulkhead requirements in accordance with 46 CFR 72.05-25(a)(7) or the applicable Subchapter.

Hose ports may be installed in any rated fire door (including stairtowers and MVZ's but not including watertight doors). Hose ports, when installed shall meet the following requirements:

- Constructed of noncombustible materials.

- Self-closing closure that is normally kept in the closed position.
- A square opening of 150 mm on a side with the door in the closed position.
- Located on the lower edge, opposite the hinge side.

Although hose ports are permitted in stairtower doors and MVZ bulkhead doors, it should be noted that for the purpose of arranging fire hose stations and fire hose lengths as required in 46 CFR 76.10-10(d), hose ports must be "considered as nonexistent" in MVZ bulkheads. In effect, this means that hose stations and hose lengths shall be determined without allowance for passing through an MVZ boundary even though the hose port is permitted.

Prescriptive Requirements:

The basic construction requirements for a door are found in 46 CFR 72.05-25 or 116.435 and are rather detailed. These are structural fire protection requirements and do not necessarily reflect requirements for watertight integrity or egress sizing requirements. Watertight doors do not at any time require insulation to be applied to meet the requirements for fire protection.

The requirements in 46 CFR 72.05-25 are based on hinged doors and thus do not give significant details about hydraulic, pneumatic, or sliding door assemblies. Such assemblies are expected to work effectively during the early period of fire exposure. Detailed requirements and testing procedures for door control systems can be found in Annex 1, Part 4 of the IMO FTP Code and could be used by the designer to prove performance under 46 CFR.

General prescriptive requirements for doors can be found in 46 CFR 72.05-25(a). Some of the more important requirements for A-class and B-class doors are listed below as a summary only and are not all-inclusive.

A-class (72.05-25(b))

- hollow or solid steel or equivalent (A-class construction) *
- A-15 insulation for any bulkhead requirement above A-0 **
- combustible veneers may be used similar to the bulkhead
- no vent grilles or other ventilation openings permitted
- 12.7 mm maximum undercut (carpet shall not pass under doors)
- 12.7 mm minimum door stop on sides and top
- 3.2 mm maximum gap between double doors
- glass used in doors shall be limited in area to .06 m^2 and be at least 6.5 mm thick, wire inserted or equivalent

B-class (72.05-25(c))

- hollow or solid steel or equivalent (B-class construction) *
- vent grill permitted in lower half of door (.19 m^2 max area)
- 25.4 mm maximum undercut (carpet shall not pass under doors)
- 12.7 mm minimum door stop on sides and top
- 3.2 mm maximum gap between double doors
- no restriction on area of glass but it shall be at least 6.5 mm thick, wire inserted or equivalent

Stairways and MVZ doors - interior (72.05-25(b)(9))

- the above A-class requirements apply, and in addition;
- doors other than those normally locked (i.e. utility lockers) shall be self closing
- doors normally open (in addition to being self closing) shall be equipped with local release and remote release from the control station

Exterior doors (72.05-25(b)(8))

- may be constructed of hardwood minimum 4.5 cm thickness ***
- unlimited area of glass permitted
- wire inserted glass required when door divides moderate and high fire risk areas from safety areas
- in cases when exterior doors are adjacent to refuge areas the doors shall fully comply with the requirements for the division in which they are located which is usually A-class or C-class smoke tight - radiation may be an issue for glass (Sec. 3.11)

* A single thickness of 3 mm steel or a double thickness of 1.5 mm steel is acceptable for A-class construction. A single 1.5 mm thick plate is acceptable for B-class. Insulated aluminum is not acceptable (because the edges around the doors cannot sufficiently be insulated) unless proven in the standard fire test.

** When a door is installed in A-15, A-30, or A-60 bulkheads the insulation requirement of 15 minutes can be met by using insulation approved under 164.007 at a thickness of .5 "S".

*** Hardwood is considered to be oak or other wood with similar resistance to fire. A specific density of approximately 0.6 may be used as a guide. Also, see the below discussion for the use of aluminum doors to exterior locations in lieu of hardwood.

The allowance of unlimited glass in B-class and exterior doors as mentioned above is not intended to degrade the integrity of the door in a fire condition. Nor is this allowance justification for the use of doors constructed entirely of glass.

Performance requirements:

Unlike the Coast Guard's prescriptive requirements, SOLAS and the U.S. shoreside industries use a performance standard for doors. The Coast Guard philosophy (based on research) is that a door constructed to the prescriptive requirements would perform adequately under most situations compared to the performance objectives.

Based on this research the following doors will be accepted in place of the Coast Guard construction standard;

- UL 10b 1 1/2 hour rated doors of noncombustible construction for A-class. The UL rating shall be hollow metal doors with no temperature rating for A-0 while hollow metal 450°F rating is required for A-15 doors. The doors must be suitable for steel bulkhead construction as recommended by the manufacturer having regard for the deformation characteristics of steel construction in a fire condition.

- ASTM E-152 1 1/2 hour fire rated steel doors for A-class. The doors must be suitable for steel construction as recommended by the manufacturer having regard for the deformation characteristics of steel construction in a fire condition.

- IMO Res A.754(18) or ASTM F-1384 tested doors of noncombustible construction. These two test methods ensure performance exactly as would be required for the barrier and subsequently, their rating is identical to the bulkhead rating system.

- 1 hour rated doors under UL or ASTM E-152 will be accepted for B-class construction. The UL rating shall be hollow metal doors with no temperature rating for B-0 while hollow metal 650°F rating is required for B-15 doors.

The UL "hollow metal" designation ensures noncombustible construction but designers should confirm this with the

manufacturer. Insulation inside the door has no restrictions when using UL rated doors. Door frames and windows used with UL rated doors shall also be UL rated for use with that particular door.

Aluminum Doors:

On vessels of traditional steel construction there are some situations when aluminum fittings will not significantly degrade the structural fire protection of the vessel having due regard for the fact that aluminum is a heat sensitive material.

In theory, aluminum fittings may be used without limitation if they can meet the standard fire test criteria for A-class or B-class construction as appropriate. In practice, this is not possible for doors and hatches because the gap associated with the edges will permit the passage of flames and will melt the aluminum even when the body of the door is insulated.

Uninsulated aluminum doors may be used (as an alternative to hardwood) for exits to the exterior (open decks) from low fire risk spaces including type 5A, corridors, stairtowers, and control stations. Open decks, in this case, do not include enclosed promenades because of the potential for smoke and heat accumulation greater than that expected on a completely open weather deck.

This allowance permitting aluminum doors in these certain locations is based on the expected low fire hazard associated with these spaces.

In summary, aluminum doors are permitted between type 1, 2, 3, or 5A spaces adjacent to type 4 or 13 (open decks) including weather deck refuge areas.

Miscellaneous considerations:

Doors in A-class and B-class construction shall be fitted with hinges and hardware of steel or other materials which are not heat sensitive and incorporate good marine practice.

Doors are only effective when in the closed position. Doors should be closed whenever possible especially at night or when compartments are not in use during the day. Doors should not be wedged open or tied open especially when not attended. Mechanical holdback hooks are not permitted on fire doors (A-class or B-class doors) but holdback mechanisms which are fail-safe and capable of local and remote operation are permissible following the restrictions in 46 CFR 72.05-25 or 116.435.

3.11 Windows and Glass
Ref: 46 CFR 32.52-(21 through 25), 72.05-30, 116.433
Test ASTM E-119, IMO Draft Recommendation.

The intent of this section is to limit the use of glass when it is of lesser integrity than the bulkhead in which it is fitted. And it is also the intent of this section to require windows to meet the construction and integrity requirements of the bulkheads in which they are fitted when in critical locations such as MVZ bulkheads, stairtower boundaries, refuge areas, and lifeboat embarkation areas. Construction and integrity considerations for windows includes;

- Noncombustible construction
- Standard furnace test for A or B classification criteria
- Emissive (radiative) output consistent with A or B class steel construction

In theory, if the above criteria are met, then there are no restrictions on the use of glass with respect to fire protection. Otherwise, restriction must be placed on the use and location of glass as described below.

In 46 CFR, under several parts, the requirements for glass installations are discussed with respect to fire protection. Historically, these requirements are based on the assumption that windows are considered a small portion of the total surface area of the bulkhead, acknowledging the reduced fire resistance of common glass. In modern ship design, windows have become larger to a point beyond the limits originally envisioned by 46 CFR and traditional ship design.

General requirements (all assemblies):

For general applications, glass shall be at least 6.5 mm in thickness and held intact with steel frames in accordance with 72.05-30(a) or the applicable Subchapter. When special hazards exist or added integrity is needed, wire inserted glass, tempered glass, or protective shutters may be required to increase the resistance or integrity of the window assembly. Also, as a general rule glass installations shall be at least 1 m above the deck (consistent with storm rail requirements in 46 CFR 72.40).

General Requirements (A/B-class Assemblies):

Wire inserted glass may be replaced by laminated glass of at least two layers. Laminated glass remains intact relatively well because the lamination provides integrity similar to the wire by holding fractured sections of glass together and the laminate reduces heat transfer to the second (outside) pane of glass. The

total thickness required would be determined by showing equivalent performance in a fire test.

The framing of a window assembly in A-class and B-class bulkheads shall be steel. Rubber gasket material is permissible for use with steel window frames as long as the frame will hold the glass if the gasket is burned away in a fire. Lock-strip rubber gaskets cannot be used as an equivalent replacement for the steel frame when the barrier is A-class or B-class.

With aluminum bulkhead construction, steel clips are required when using aluminum frames and clips shall extend at least 10 cm under the insulation on the surrounding bulkhead and must be mechanically fixed to the bulkhead. This policy is consistent with the door framing policy for aluminum construction as outlined in SNAME T+R Bulletin 2-21.

General Requirements (C-class Assemblies):

In the case of C-class bulkheads, frames shall be noncombustible (usually steel or aluminum). Lock-strip gaskets may be used in place of a noncombustible frame if the gaskets comply with ASTM C-542 which shall include flame resistance using ASTM C-1166.

Specific limitations on the Use of Glass:

In order to maintain the integrity of the bulkheads as originally intended, the amount of non-fire rated glass permitted in the bulkheads must be limited and optional protection measures implemented as outlined below and summarized in table 3.2.

<u>A-class adjacent to exterior (to type 13 space)</u> - The total amount of glass shall not exceed 50% of the bulkhead area. This limitation is placed because of the recognition that annealed glass does not meet the A-class performance as required for these bulkheads. Glass surfaces in excess of this limit will disqualify the bulkhead as A-class construction and will require additional measures to increase integrity as determined by an engineering analysis conducted by the designer. (also see section 6.17 of this circular)

<u>A-class adjacent to exterior (to type 4 areas)</u> - glass shall be wire inserted (6.5 mm) or laminated glass with the exception of type 5 and 5A spaces which do not need wire inserted glass. Additionally, total area shall be limited to 25% of the bulkhead area. Windows above or below safety areas may also need special consideration.

<u>A-class adjacent to exterior (qualified refuge area)</u> - In addition to the basic requirements for compartments adjacent to type 4 areas, windows shall be fitted with 1 1/2 hour shutters activated automatically and with manual operation from the

exterior with the exception of type 5A spaces which do not need shutters. Alternatives to shutters such as deadlight covers or sprinklers may be considered by MSC during plan review if the window assembly can meet the radiation characteristics of the rated bulkhead as noted in figure 3.6 or the prescriptive requirements in NVIC 10-93. Windows above or below refuge areas may also need special consideration.

C-class and smoke tight to exterior (to type 13 spaces) - no limitations on the area of glass.

A-class or B-class interior (low/moderate fire risk) - glass shall be wire inserted, laminated, or fire rated safety glass and shall meet the smoke and flame integrity of the bulkhead and is limited to 5% of the bulkhead area. Or, as an alternative, meet the smoke, flame, thermal, and radiative criteria with no subsequent limitation on area. This second option requires full scale testing and engineering analysis. If a designer wishes to deviate it is the responsibility of the designer to adequately predict the radiation hazard to nearby combustibles or passengers and crew using engineering methods and to propose a method of mitigation acceptable to the MSC during plan review.

A-class or B-class interior (critical locations) - Windows are generally prohibited in critical locations such as barriers adjacent to machinery spaces, main vertical zone boundaries, stairways, and passageways. One exception to this is barriers of engineroom control spaces looking into the engineroom when the control space is located entirely within the engineroom.

Exterior Ship side or "open" superstructure - Materials of construction for framing and glazing shall be noncombustible. Otherwise, there are no fire related restrictions on glass or framing except when considered in special ship side locations as described below.

Miscellaneous Applications:

For service openings in a galley bulkhead (usually not fitted with glass) that serve mess areas or dining areas, the division between the two is required to be A-class. The serving window closure is expected to maintain the integrity of the barrier since the opening is not fitted with glass. This can be accomplished by installing a hinged steel cover that can be closed from outside the galley. A rolling steel shutter which is operable from outside the galley space and is rated for 1-1/2 hours by UL is also acceptable.

Bridge spaces have special requirements for windows which face out over the vessel for navigation purposes and do not require specific structural fire protection as discussed in this circular. However, glass located in bulkheads and doors that exit the bridge adjacent to other interior spaces are part of the

fire control bulkheads and are not part of the ship's navigation and thus must meet the structural fire protection requirements of 46 CFR.

Special Ship side Considerations:

Special consideration should be given to windows/openings located in the ship side below lifeboat/liferaft embarkation areas, refuge/safety areas, or lifeboats/liferafts based on the potential for fire and smoke to affect the embarkation area or the actual lowering of the lifesaving appliances. A steel barrier providing A-0 protection should be sufficient to permit launching of lifesaving equipment or the deployment of inflatable slides. However, window radiation may degrade this integrity even when the window is A-0, since window radiation may approach 50 kw/m^2 in a representative fire.

Windows directly above lifeboat/liferaft embarkation or refuge/safety areas may also create a hazard to people if a fire causes such assemblies to fail and fall onto the deck below. In this case, laminated or wire inserted glass may be necessary to ensure the integrity of the glass structure.

Windows or openings in the ship side of the vessel shall not degrade the integrity of decks by permitting fire spread to compartments above through other windows or openings. To permit fire spread to a compartment above would violate the fire integrity of the deck. Consideration shall be given in the design of the vessel exterior boundaries and ship side to prevent this mechanism of fire spread.

In addition, windows which are located in the superstructure which face adjacent windows must account for fire spread by radiation. As an example, windows may be permitted in exterior boundaries of stairtowers in accordance with section 3.19 of this circular only if other windows adjacent to or below these stairtower windows do not present a fire radiation hazard.

Bulkhead Radiation Requirements:

The radiation hazard through glass may be a significant problem and may be used as a criterion for equivalence to the bulkhead in "critical" locations. Research has been done to evaluate the radiation characteristic of steel bulkheads so that a comparison can be made and performance criteria can be set for window construction when thermal radiation is of concern. Tests

THIS SPACE ADJACENT TO →

↓ TYPE	TYPE 13	EMBARKATION REFUGE/SAFETY	INTERIOR TYPE 5, 6, 7, ETC.
7	6.5 mm GLASS, 50% AREA LIMIT FOR A/B CLASS WITH STEEL FRAME OR STEEL CLIPS REQUIRED.	WIRE INSERTED OR LAMINATED, 25% AREA LIMIT FOR A/B CLASS WITH SHUTTERS OR PROTECTION REQUIRED FOR REFUGE AREAS	MEET ALL THE BULKHEAD REQUIREMENTS AND LIMITED TO 5% BULKHEAD AREA OR MEET ALL THE REQUIREMENTS INCLUDING RADIATION CRITERIA
5	SAME AS TYPE 7	SAME AS TYPE 7	SAME AS TYPE 7
5A	NO AREA LIMITATIONS	SAME AS TYPE 5 EXCEPT THAT SHUTTERS ARE NOT REQUIRED ADJACENT TO REFUGE AREAS	SAME AS TYPE 7
MACH-INERY SPACE AND MVZ	PERMITTED ONLY ON A CASE-BY-CASE APPROVAL	NORMALLY NOT PERMITTED WITHOUT ENGINEERING ANALYSIS PROVING FULL PERFORMANCE	NORMALLY NOT PERMITTED WITHOUT ENGINEERING ANALYSIS PROVING FULL PERFORMANCE

GLASS REQUIREMENTS BY LOCATION (Sub H)
TABLE 3.2

conducted by the Coast Guard for A-class construction using steel show that the radiation and surface temperature is as follows:

A-60 1 kw/m^2 and 140 $^\circ$C surface temperature at 60 minutes
A-30 2.5 kw/m^2 and 250 $^\circ$C surface temperature at 60 minutes
A-15 4.5 kw/m^2 and 350 $^\circ$C surface temperature at 60 minutes
A-0 52.0 kw/m^2 and 800 $^\circ$C surface temperature at 60 minutes

Testing of window assemblies for emissive power shall be in accordance with the Thermal Radiation test Supplement to Fire Resistance tests for "A" And "B" Class Divisions in the IMO Fire

Test Procedures Code. This test method outlines the acceptance criteria and the exact placement and type of measuring devices. Fig 3.4 is an excerpt from the FTP Code showing the test arrangement and acceptance criteria.

Use of Active Systems:

Windows that use active methods for providing the required integrity shall demonstrate their performance and reliability. The reliability of active systems is an issue because passive systems are considered to be almost perfectly reliable. Enough of a difference in reliability exists to require the engineer to address this issue. There are many reliability determination techniques available to the designer which may be used in the engineering analysis.

CRITERIA FOR HEAT FLUX		
FIRE RESISTANT DIVISION CLASSIFICATION	TIME PERIOD FROM BEGNNING OF TEST	EMISSIVE POWER, Ec (Kw per sq m)
A-0	60 min	56.5
A-15	15 min 60 min	2.34 8.0
A-30	30 min 60 min	2.34 6.4
A-60	60 min	2.34
B-0	30 min	36.9
B-15	15 min 30 min	2.34 4.3

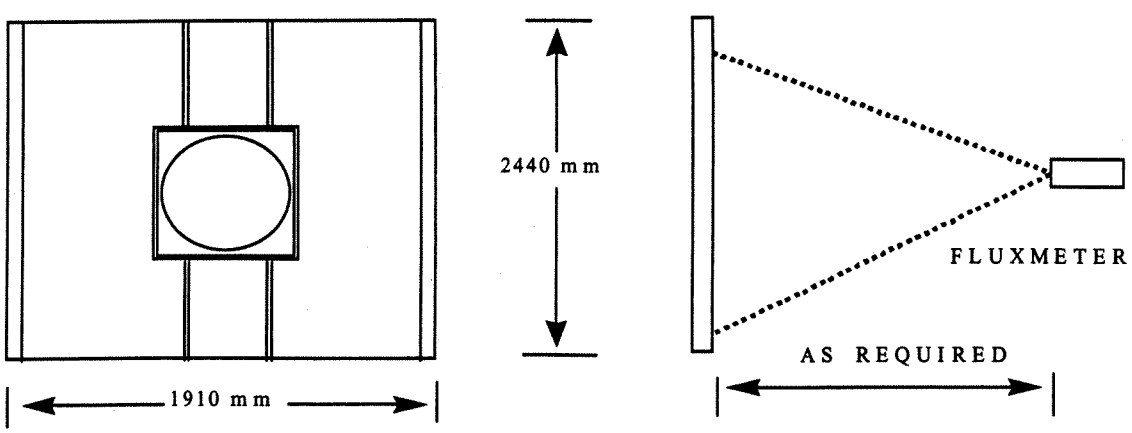

WINDOW RADIATION TEST PROCEDURE

FIGURE 3.4

3.12 Tonnage Openings
Ref: 16 CFR 72.05-35(b), 108.145
Test ASTM E-119, IMO Res A.653(16)

Where tonnage openings are made in A or B-class boundaries, they should be closed by steel plates of at least 3 mm (1.5mm for B-class) and suitably stiffened and held in place by steel hook bolts or equivalent. No gasket or caulking is permitted by the definition of a tonnage opening as defined elsewhere in 46 CFR. The plate should overlap the opening and be close fitting.

Where tonnage openings are installed in B-15, B-30, A-15, A-30, or A-60 barriers, the cover plate should be insulated to the same standards as the bulkhead. Care should be taken to ensure that the gap between the insulation on the cover and the insulation on the division is as small as possible. Insulation need not be applied over the hook bolts.

3.13 Cable Penetrations
Ref: 46 CFR 72.05, 116.415(a)(ii) through (iv)
Test ASTM E-814, UL 1479, MIL-P-24705,
IMO Res A.754(18)

Cable installations shall not degrade the integrity of the barrier at the penetration. This integrity includes fire resistance, smoke passage, and structural integrity which are the same basic performance requirements used to test barrier assemblies.

Cable Penetration Fire Stop Approvals:

Designs for wiring penetrations of A and B-class bulkheads are reviewed by the Coast Guard and letters are issued to manufacturers. It is expected that construction shall be of good marine practice and materials shall be suitable for marine use.

ASTM E-814 is the primary test method and involves an F rating for the passage of flame and hot gases and a T rating for temperature rise on the unexposed side (180° C for A-class). If the approval is required for A-class barriers the F-rating shall be at least 60 minutes. For B-class barriers the F-rating shall be at least 30 minutes. For example, if a fitting (with a measured F rating of 60 minutes) has a measured T-rating of 25 minutes then it can be used by itself in a bulkhead rated A-15 or less. It can be used as a component in an A-30 or A-60 bulkhead by applying approved insulation.

The insulating requirements for cable penetrations is similar to that of other bulkhead fittings. Insulation of cable penetrations includes stuffing the insulation between the cables and wrapping it around the cable bundle out to a distance of 300 mm at the same thickness "S" or fraction of "S" as the bulkhead. Figure 3.5 represents the default arrangement. Other arrangements are acceptable when specifically tested in the furnace and accepted by the Coast Guard.

The hose stream test is not required for Coast Guard approval but is optional under ASTM E-814 and IMO Resolution A.754(18). However, structural integrity of the penetration is important and fittings should be mechanically solid. An inspector may pull on cables to ensure there is sufficient mechanical strength.

Watertight Integrity:

Fire stops requiring watertight integrity shall be hydrostatically tested with a static head equal to 6 meters of

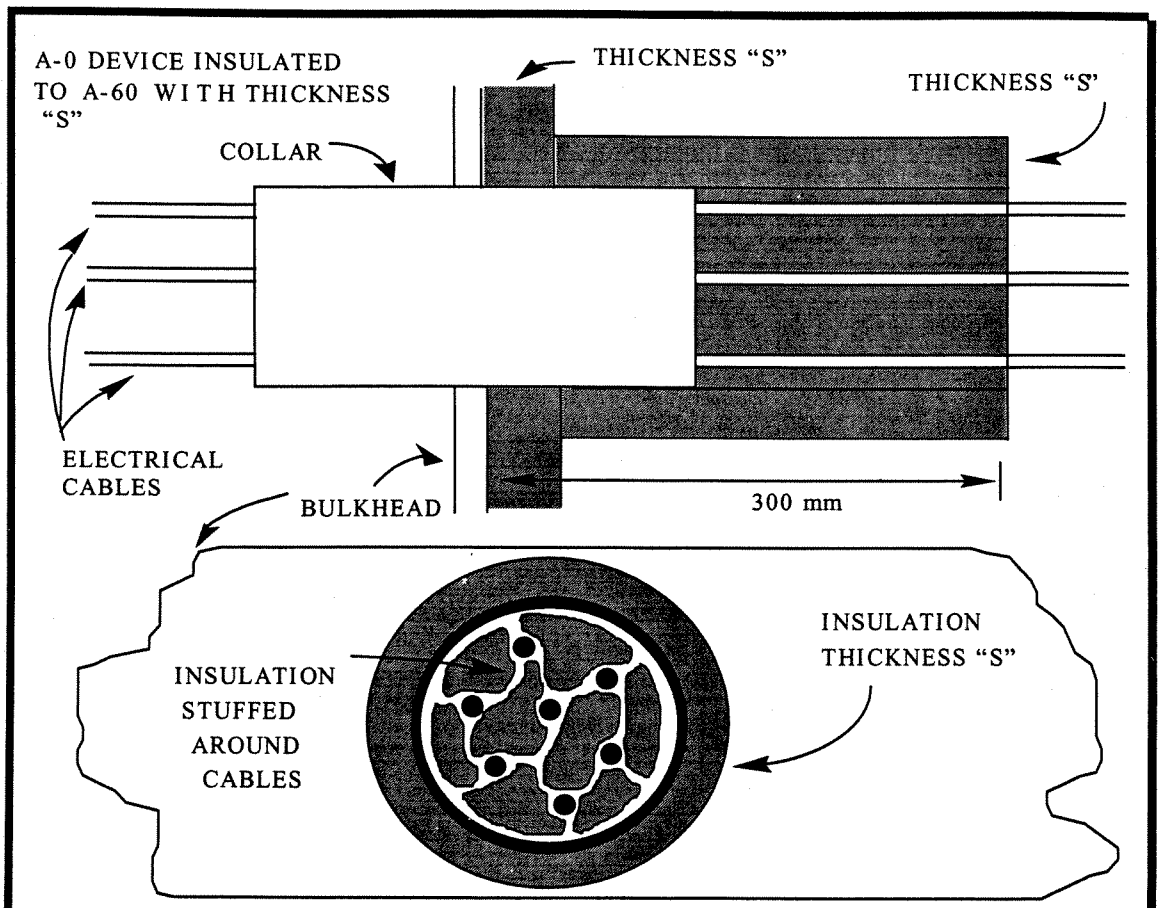

NOTE: INSULATION THICKNESS "S" MAY BE REDUCED ACCORDINGLY FOR RATINGS LESS THAN A-60.

PENETRATION INSULATION DETAIL

FIGURE 3.5

water for a 10 minute period. The water leakage shall be collected in a container and the total leakage shall be negligible. This is essentially the same performance as is used in watertight door tests using ASTM F-1196. The fitting tested for watertightness shall be of identical dimensions and construction as that used in the furnace test. Passing this test permits use of the fitting in watertight bulkheads under the assumption that its ability to resist the passage of water is under emergency situations (i.e. during flooding). Its use under other conditions (i.e. tank boundaries) is governed by Subchapter F and Marine Safety Center requirements as applicable to marine engineering.

Other Acceptable Test Methods:

Penetrations that meet the MIL-Spec for naval vessels (MIL-P-24705) are acceptable and will be given an "A-0 watertight" classification. Other ratings may be given after conducting the ASTM E-814 test to determine the "T" rating since there is no way of realistically determining this rating from the MIL Spec testing.

UL 1479 is also an acceptable test method but most UL rated assemblies involve concrete or gypsum board construction which may not be applicable to steel construction for various reasons involving heat transfer mechanisms. For this reason, it is important that the test used to determine the "F" and "T" ratings is conducted in a steel bulkhead for Coast Guard acceptance.

Additional Testing Details:

The penetration being tested should be representative of the actual installation. For multi-cable transits, the opening tested should have roughly 50 percent of the opening area displaced by cables (SOLAS Res. A.754(18) requires no more than 40 percent). In any event, the size of the fire stop tested and the diameter of the cables used in the test shall be the maximum limits for the Coast Guard acceptance.

Insulation used during the test shall be documented on the approved drawing and shall be required for actual installations. When insulation is used in the test, it shall be applied to the unexposed side (outside) which is considered to represent the most onerous arrangement.

If a penetration is not normally installed symmetrically in the barrier, the longer portion or the portion with the majority of the fitting shall be placed on the exposed side (inside) which is considered to represent the most onerous arrangement.

Testing should be conducted in the orientation in which the fire stop will be installed. If the fire stop will be used in bulkheads and decks, then the fire stop shall be tested in the horizontal plane representing a deck installation which is considered to represent the most onerous arrangement.

Material and Construction Details:

Penetrations through divisions which are only required to be C-class do not require approved fire stops and should be constructed in accordance with good marine practice. All materials shall be noncombustible.

Penetrations through divisions which are required to be C-class smoke tight do not require approved fire stops but shall be tight fitting so as not to pass smoke. Approved fire stop putties may be used to fill the gaps. In this case there is no requirement to apply these materials in any specific thickness or method as would be required for A/B-class construction as long as the penetration is adequately sealed using good marine practice.

It should be noted that 46 CFR 111.60-5 references IEEE standard number 45 section 20 which requires that a cable passing through a bulkhead shall have at least a minimum bearing surface of 6 mm. This in effect would require some form of bushing even for C-class bulkheads.

Cable penetrations should be mechanically supported by means other than the fire stop. Support for cables shall be suitably stiffened, made of noncombustible material, and also shall not be heat sensitive to ensure the cable support remains intact during fire exposure. Fiberglass cable trays may be used on open decks and in machinery spaces in accordance with the Marine Safety Manual, Vol. II, Paragraph 5.C.6. However, they shall be fitted with enough steel supports to ensure the cables remain in place after a fire and such cable trays shall not present a fire hazard in excess of that otherwise provided by the cables. This would be proven by subjecting the tray to a representative fire test to prove low flame spread performance.

The material used to seal the penetration shall be noncombustible, or an intumescent material. Ideally, smoke generation and flame spread by the material surface should not exceed that allowed for interior finishes. In practice the small surface areas associated with these materials minimizes the hazard potential. For this reason, the material properties are seldom actually tested but rather generally observed during the furnace test.

Penetrations through A-class and B-class divisions receive Commandant acceptance after submission of test results as described above. The submission shall include detailed drawings of the penetration device including dimensions, materials of

construction, and construction method. The inspector then need only ensure the fitting is properly constructed in accordance with the approved drawings and rigidly installed with no loose cables.

3.14 Piping Penetrations
Ref: 46 CFR 56.50-1(a), 56.60-25(a), 116.415(a)(ii - iv)
Test ASTM E-814, UL 1479, MIL-P-24705,
IMO Res A.754(18)

Piping penetrations shall not degrade the integrity of the bulkhead and notice should be taken of Subchapter F, specifically 46 CFR 56.50-1 and section 2.3 of this circular dealing with plastic pipe and other materials considered to be heat sensitive. Many installations employ Coast Guard accepted fire stops tested and fitted specifically for pipes using the process discussed above for cables. All installations shall employ good marine practice including resistance to vibration and movement. Some specific requirements include:

- Piping made from heat sensitive materials shall not penetrate A-class or B-class divisions unless performance can be proven, or constructed in accordance with figure 3.6(b), (d), (f), and (h) as a minimum prescriptive requirement.

- Steel pipe in steel bulkheads and aluminum pipe in aluminum bulkheads shall be welded continuously on one side for A-class penetrations. B-class penetrations shall be close fitting.

- Pipe penetrations through C-class smoke tight barriers should be mechanically supported and made smoke tight as discussed in section 3.2 (C-class smoke tight bulkheads).

- Piping is required to be insulated to the same level of performance (thickness "S") as that required for the bulkhead. This insulation shall be applied for a distance of 30 cm on the same side of the bulkhead which is insulated. This is usually both sides for aluminum construction.

- In some limited arrangements in accordance with figure 3.6(d) and (f), the insulation shall be carried out 450 mm and the insulation shall be placed on both sides of the bulkhead.

Bolted connections are not permitted for pipe penetrations in any bulkhead or deck in accordance with the requirements of 46 CFR Subchapter F.

When sleeves are incorporated and extend 30 cm on each side of the bulkhead, approved fire stop putties need not fill the entire length of the fitting. In most cases, the manufacturers will

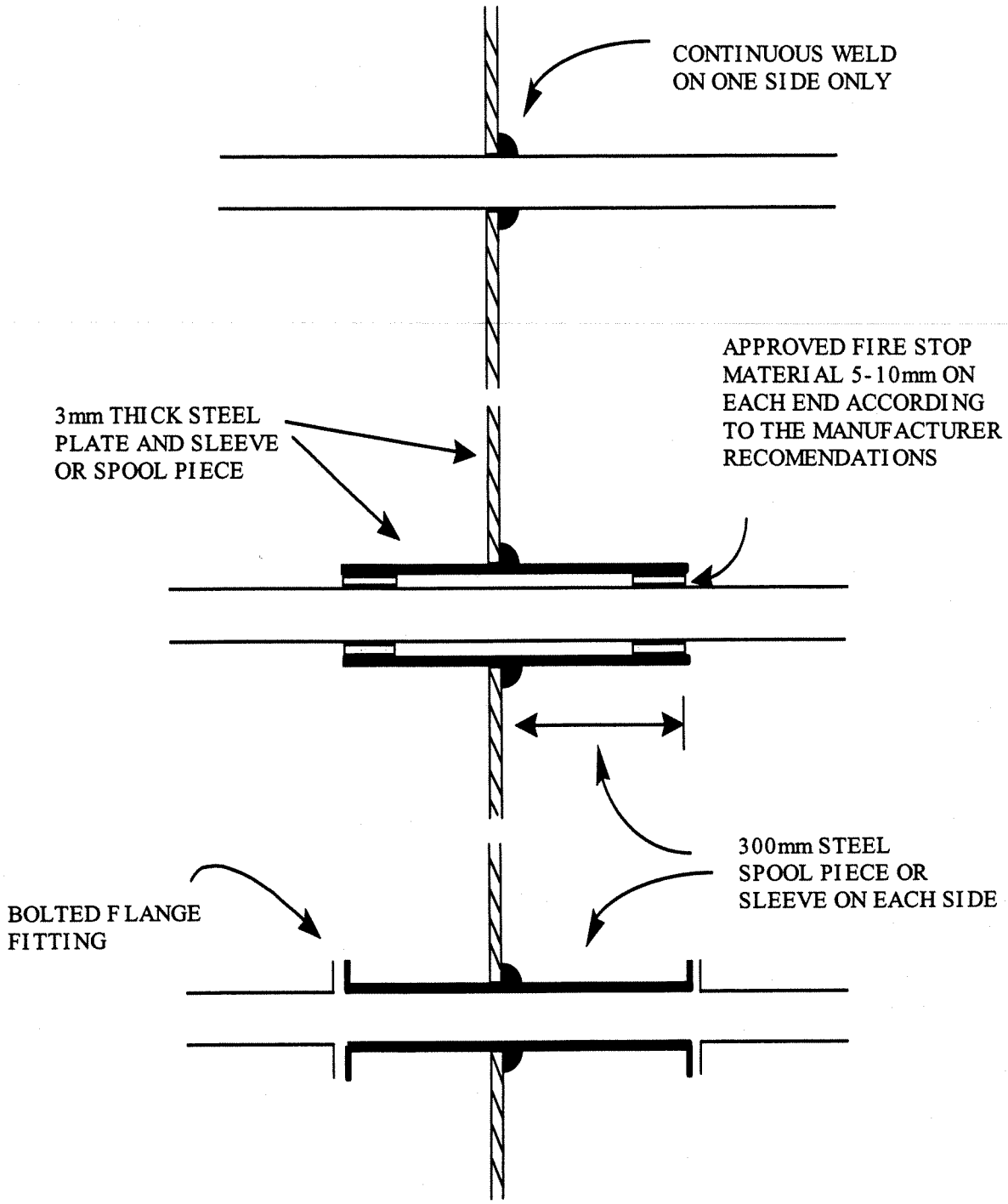

STEEL BULKHEAD (A-CLASS) WITH STEEL PIPE

FIGURE 3.6(a)

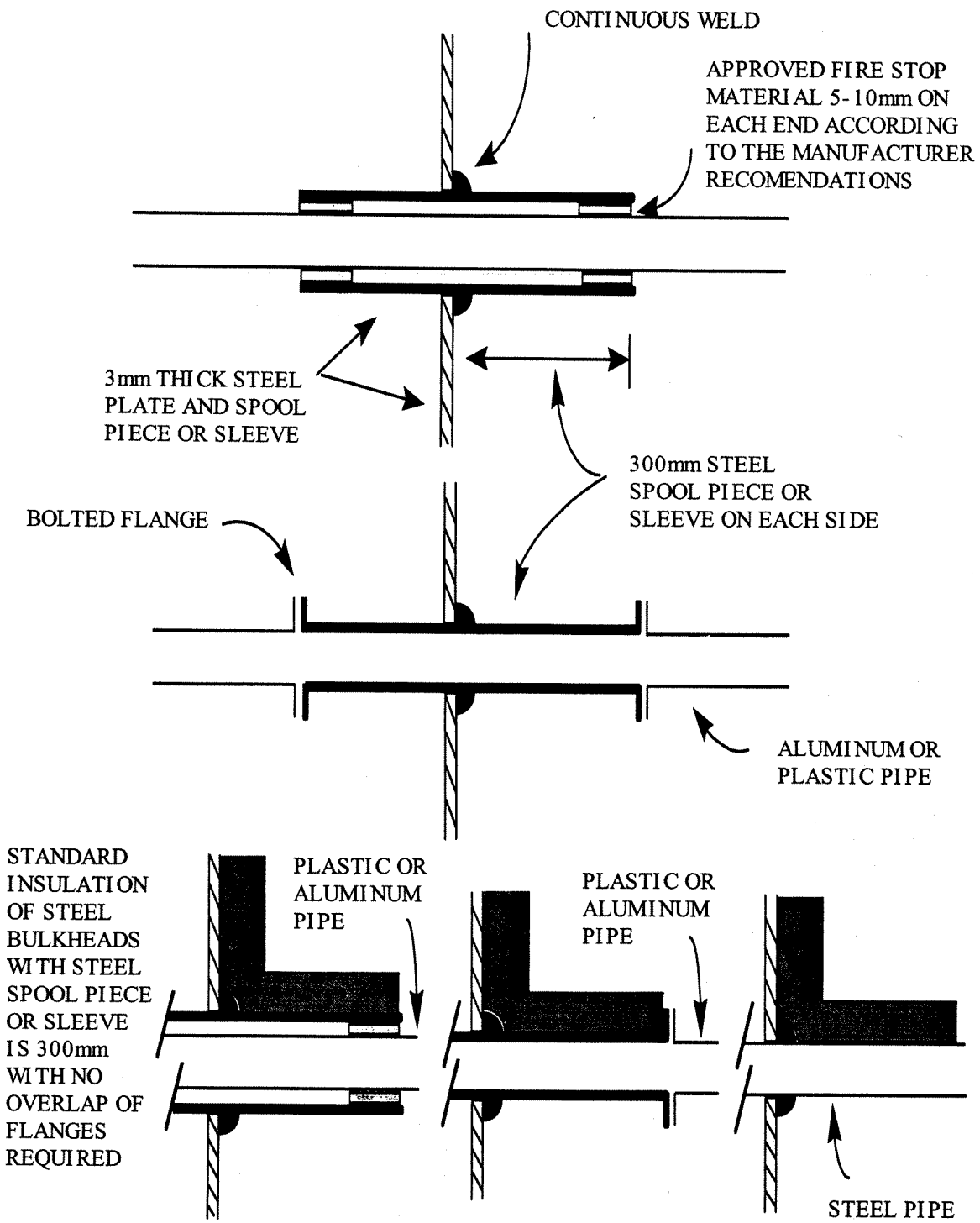

STEEL BULKHEAD(A-CLASS) WITH PLASTIC OR ALUMINUM PIPE

FIGURE 3.6(b)

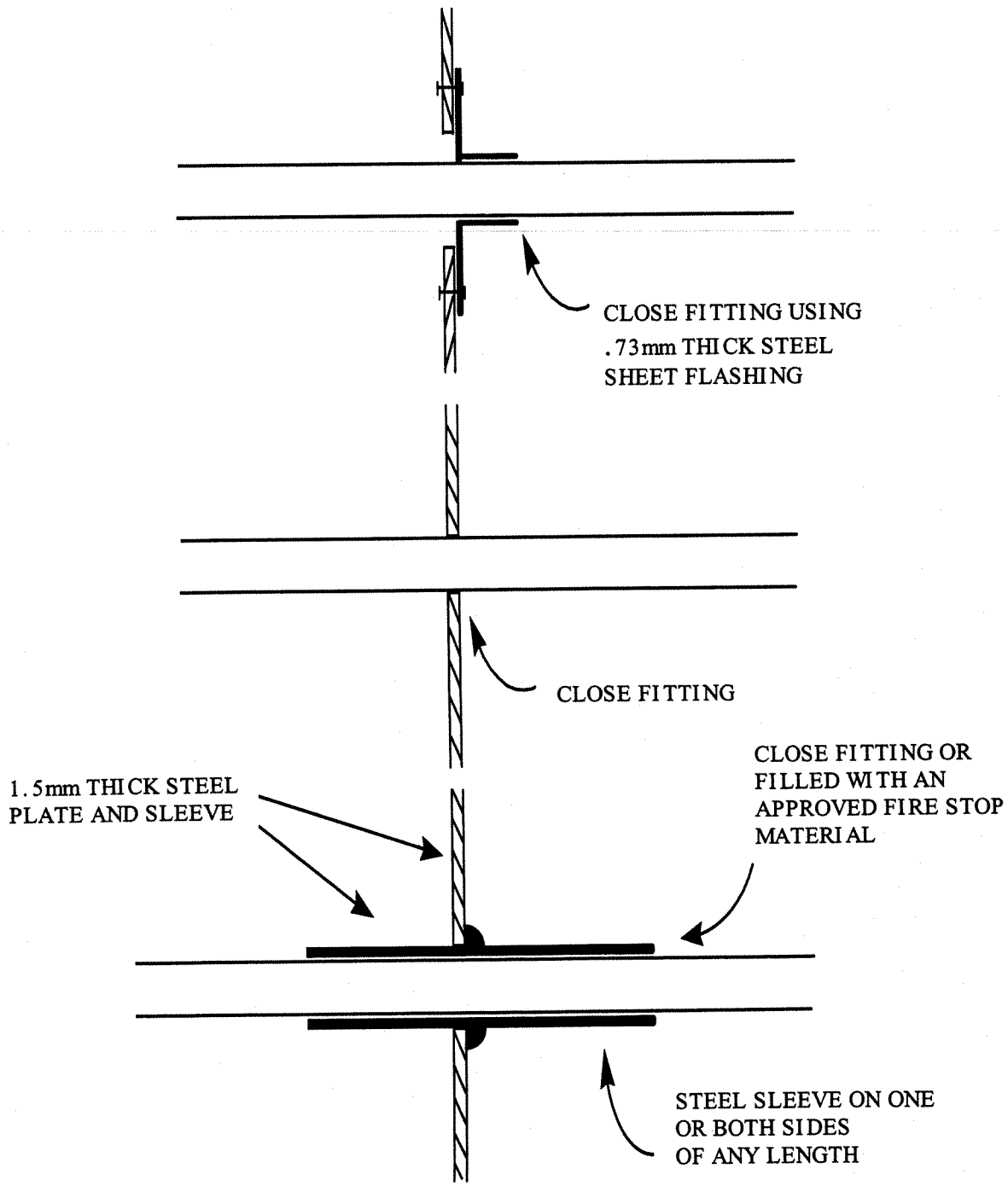

STEEL BULKHEAD(B-CLASS) WITH STEEL PIPE

FIGURE 3.6(c)

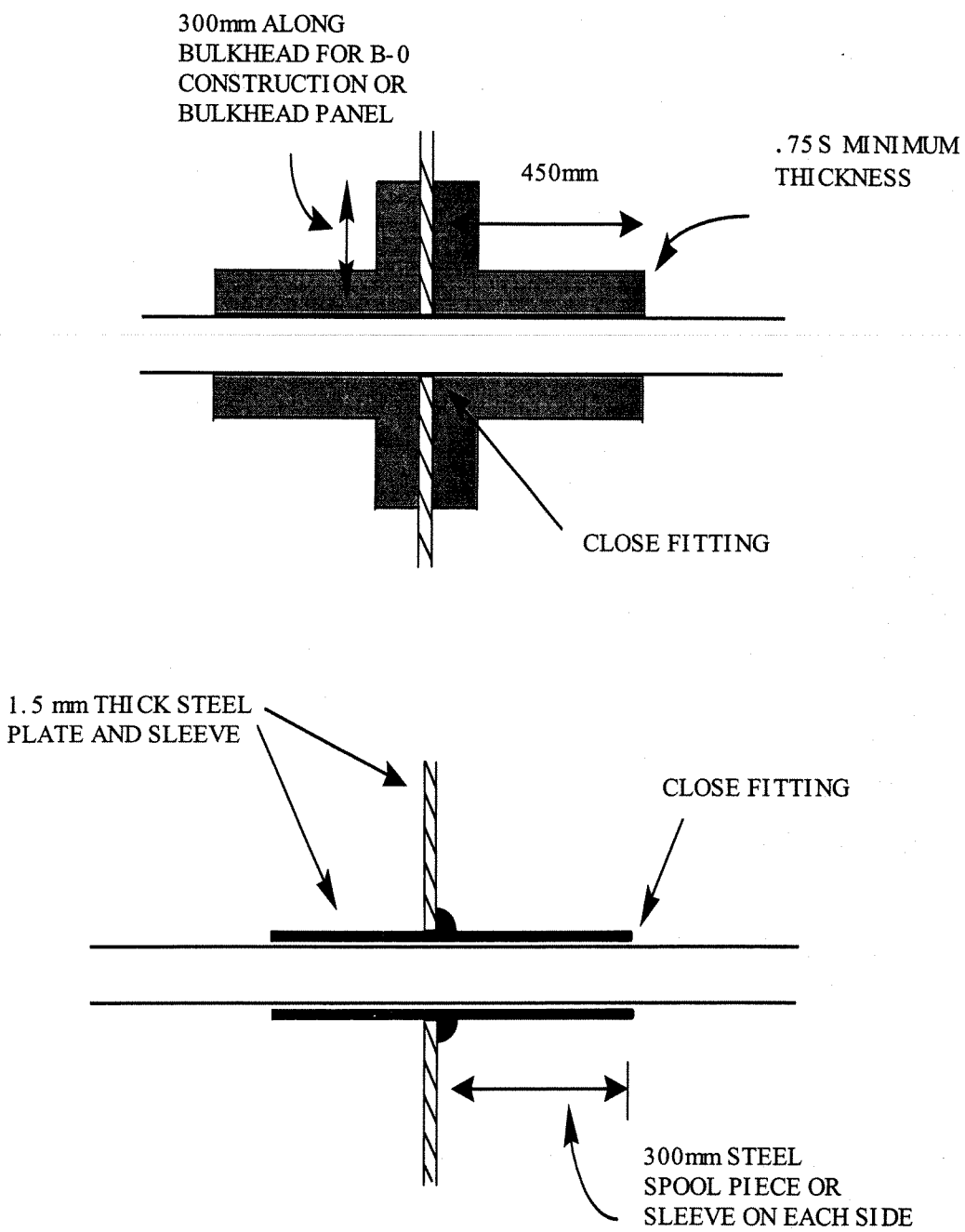

STEEL BULKHEAD(B-CLASS) ALUMINUM OR PLASTIC PIPE

FIGURE 3.6(d)

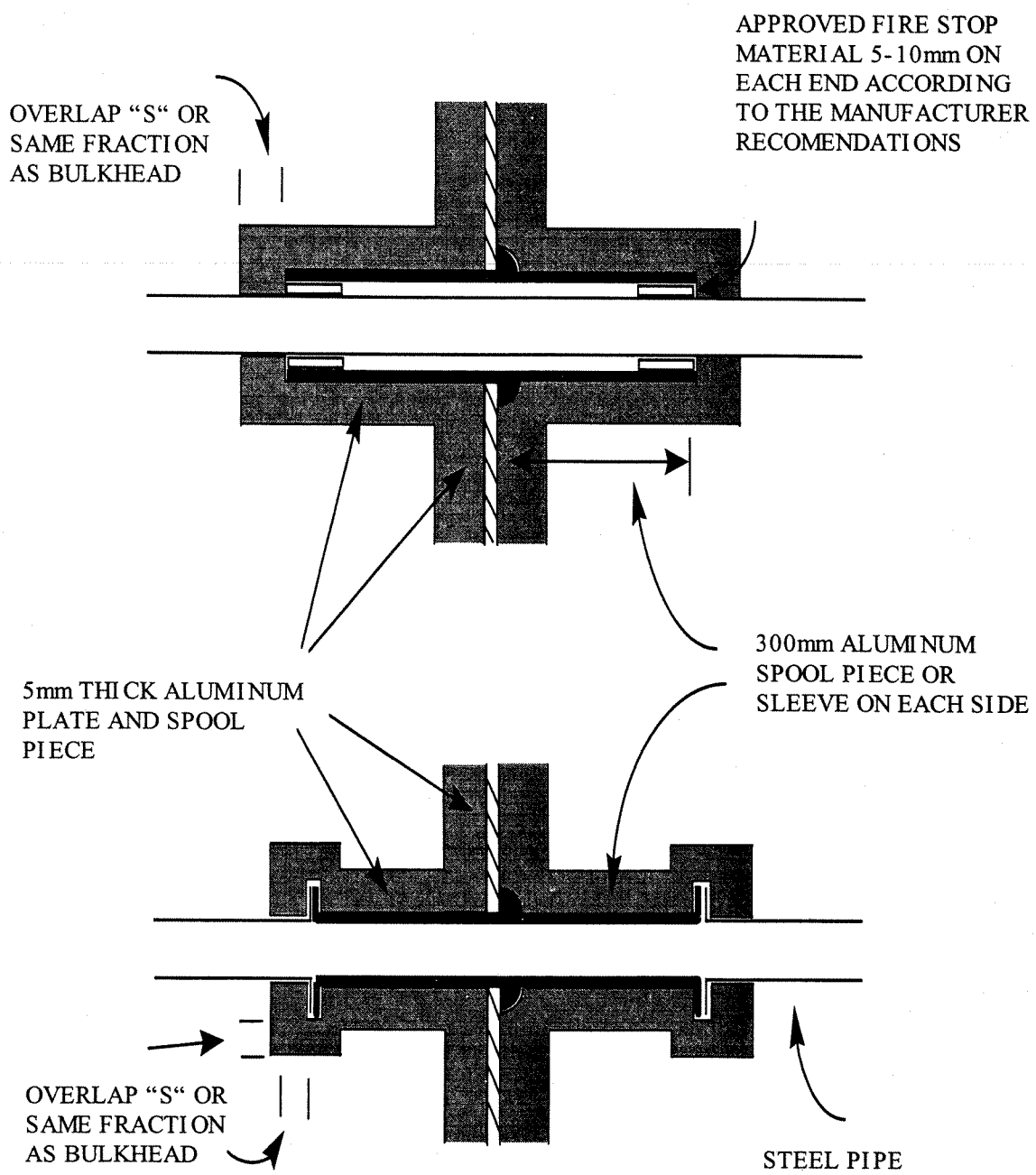

ALUMINUM BULKHEAD(A-CLASS) WITH STEEL PIPE

FIGURE 3.6(e)

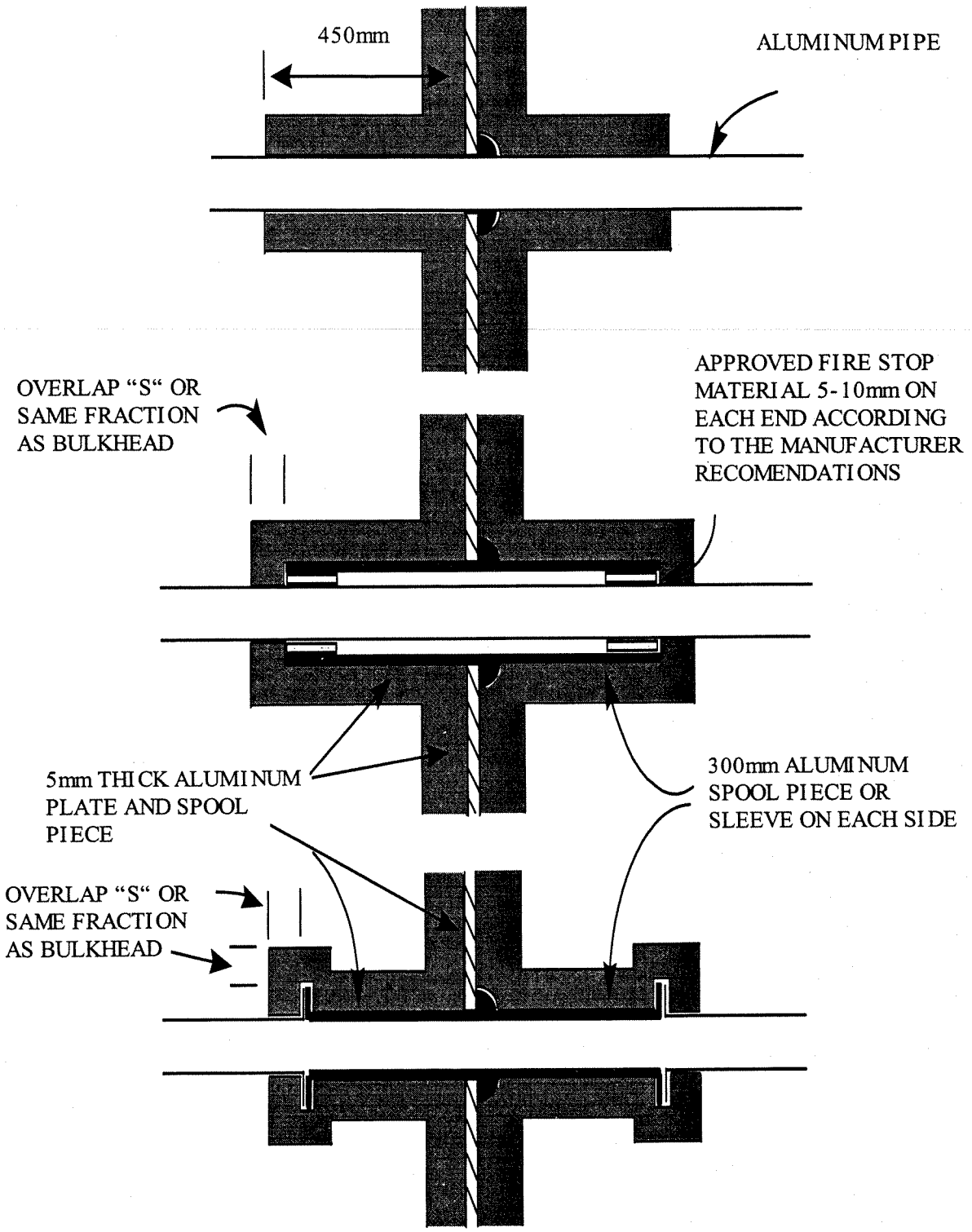

ALUMINUM BULKHEAD(A-CLASS) ALUMINUM OR PLASTIC PIPE

FIGURE 3.6(f)

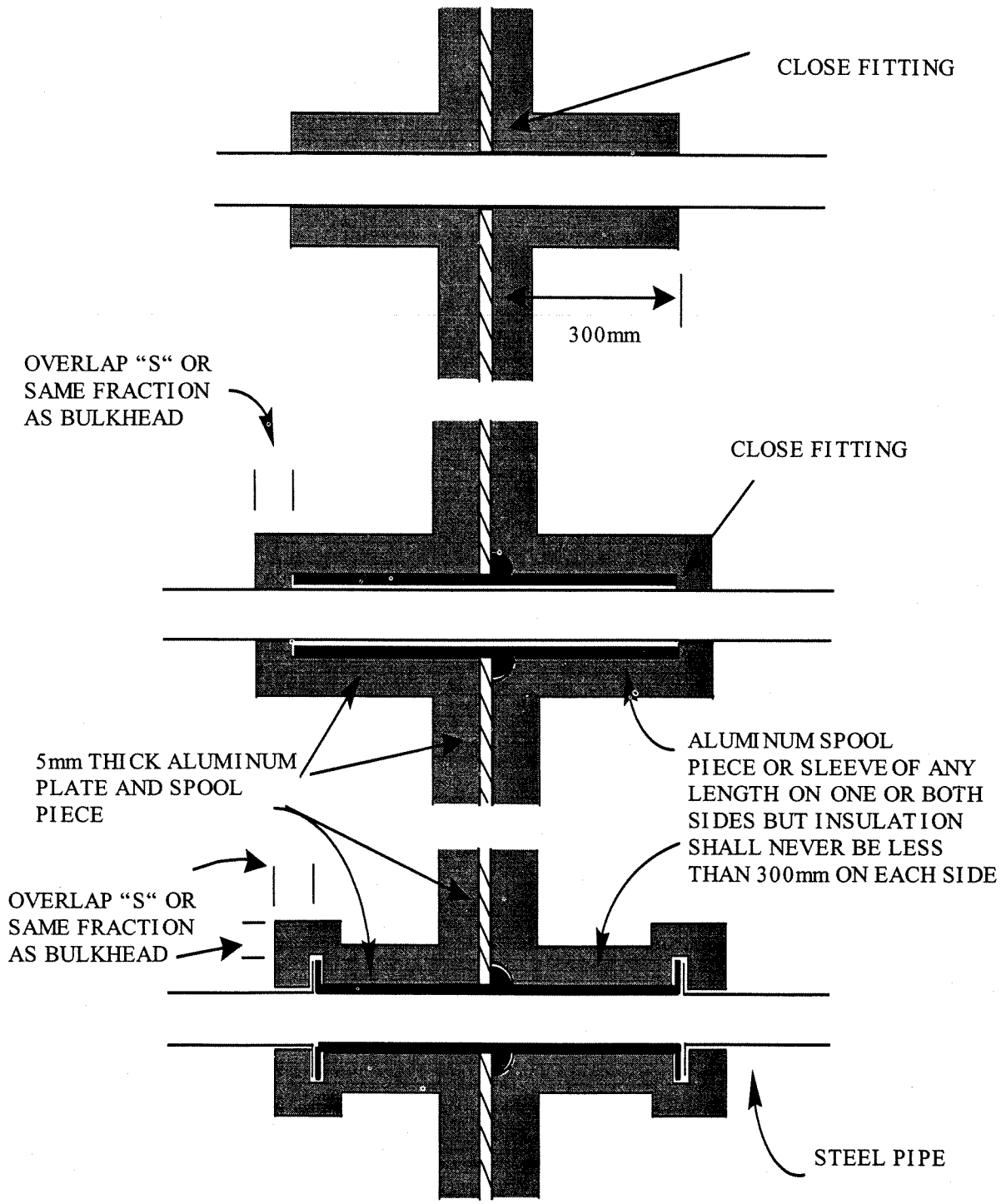

ALUMINUM BULKHEAD (B-CLASS) STEEL PIPE

FIGURE 3.6(g)

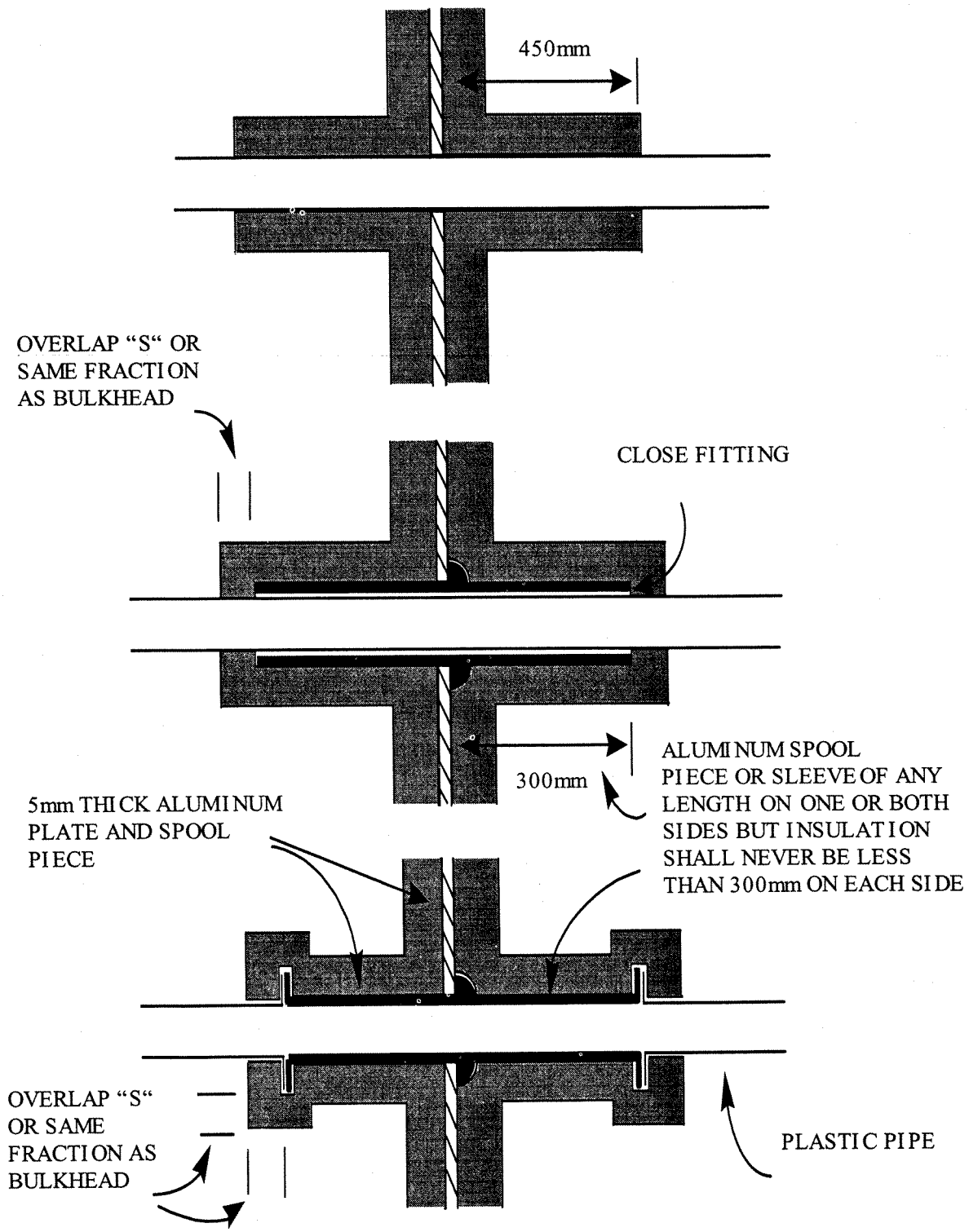

ALUMINUM BULKHEAD (B-CLASS) ALUMINUM OR PLASTIC PIPE

FIGURE 3.6(h)

recommend to fill only about 5-10 cm on each side depending on the width of the opening and the fire stop orientation. In deck penetrations using cement type materials, the opening is usually filled for the entire depth of the sleeve because the material settles to the bottom. In any case, it is very important that the pipe be mechanically supported external of the sleeve so that the pipe is not resting on one edge of the sleeve or relying on the sealant for support.

For A-class and B-class aluminum bulkhead construction, figure 3.6 (e) through (h) provide arrangements that meet the intended performance including the use of insulation which may be used to maintain the critical temperature in accordance with section 2.3 of this circular.

Penetrations shall be properly supported with bolted or welded bracing. Combustible or heat sensitive materials are not permitted to be used for structural support of piping because such components are load bearing and the possibility of failure during a fire is an unacceptable hazard.

In cases when the bulkhead is required to be watertight, other requirements may apply in accordance with 46 CFR Subchapter F including 46 CFR 56.60-25(a)(1) which includes a metallic spool piece and adjacent metallic shutoff valve. The requirement for a shutoff valve has nothing to do with structural fire protection.

3.15 Ventilation Systems
Ref: 46 CFR 32.56-60, 72.05-50, 108.181, 116.610
Test ASTM E-119

Ventilation ducting presents a significant fire hazard in that ductwork extensively penetrates barriers and could provide an excellent avenue for flame and smoke spread past these boundaries. However, current regulations are based on the assumption that "conventional" duct construction will provide some level of inherent integrity. It is assumed that the ducting will remain intact for some duration so as not to provide a rapid and uncontrollable path for fire and smoke spread.

Conventional Construction:

"Conventional" ducting shall be constructed of steel with a minimal thickness of 0.73 mm, properly stiffened, and rigidly connected to the ship structure. Although conventional ducting is not actually required, its use is recommended to avoid additional arrangements for penetrations such as the use of dampers, sleeves, etc., that would otherwise not be required. For example, the requirements for fire dampers are based on the

above minimum construction standard. If ventilation is constructed of thinner steel, other materials, or in some way of lesser integrity, then the damper requirements outlined in section 3.16 through 3.18 may be changed so as to maintain the same degree of integrity.

If ducting is to be designed and constructed of materials having a lesser inherent integrity than 0.73 mm steel, then an equivalent level of safety must be achieved considering the need for integrity of fire boundaries. If the designer wishes to deviate from the minimum prescriptive requirements then the burden is on the designer to show that the structural fire protection of the barriers is not degraded by the ventilation ducting. SNAME TB 2-21 (pg. 14-15) for example, provides alternative arrangements for aluminum construction.

It should also be noted that conventional ducting is considered to be dedicated. In other words, the duct is not used as a rated barrier or ceiling. For example, a dedicated duct would be constructed within a concealed overhead and the duct wall itself would not serve as the ceiling or deck. An example of a non-dedicated duct is a large plenum space in which the barriers of the plenum are actually the duct itself. These arrangements are often found on large passenger vessels in accommodation areas where numerous ducts feed into a vertical plenum leading up to the ventilation exhaust deck. In this case, the plenum may be classified as a type 12 void space or it may be considered an extension of the compartment it serves but such plenum arrangements shall not degrade the compartment integrity by creating an unprotected fire path from one compartment to another. The details of construction shall be approved on a case-by-case basis by the MSC during plan review.

The only time conventional ducting is actually required is for passenger vessels using fuels with a flash point below 43°C as described in 46 CFR 72.15-10.

Associated Components:

Noncombustible gasket material meeting 46 CFR 164.009 can be used without limitation. Combustible materials such as rubber may be used for gaskets between flanges or standoff vibration isolators but shall not be load bearing components, that, if they were to fail in a fire, would cause the ductwork to fall or collapse. Such materials shall be kept to a minimum. This of course is a difficult requirement to enforce and in general, should be discussed during plan review with the OCMI or the MSC. It is best if the designer clearly marks the locations and use of these materials and provides detailed drawings of typical arrangements using these materials. The use of such materials shall not degrade the integrity of the system or associated barrier penetrations.

No other combustibles are permitted in the construction of ventilation ducting unless meeting the strict requirements for combustible ducting as outlined below. All connections, hangers, bracing, and supports shall be by mechanical means, suitably stiffened, using noncombustible and non-heat sensitive materials.

Passenger Stateroom Arrangements:

Ventilation systems in passenger ships that supply air to accommodation spaces (staterooms) have received special attention because of the numerous openings required in stateroom areas. Testing has shown that the upper section of the stateroom door perimeter provides a substantial portion of the smoke ingress into the corridor. In general, the smoke will migrate along the upper portions of the compartment and pass through openings located within that hot upper layer of the smoke - such as the upper section of the door jamb or overhead ducting.

The general flow of air in a typical stateroom area involves mechanical supply air discharging at ceiling level and natural exhaust discharging into the corridor down low at deck level. With the stateroom doors closed, this pattern provides a reasonable level of safety until the smoke layer descends to the door vent. In any case, it is expected that this ventilation arrangement would provide sufficient time for the purpose of detection, notification, queuing, and evacuation of persons from rooms in the vicinity of the fire.

For the above reasons, door vents placed in the <u>lower half</u> of the door height and balancing ducts at <u>deck level</u> such as the ones normally found below the bathroom floors should minimize the hazard of smoke movement into the passageway during the early stages of fire growth. Door vents and balancing ducts are not permitted in A-class divisions. Also, they are subjected to any area limitations as outlined in 46 CFR or SOLAS as applicable. See figure 3.7 for details of acceptable arrangements.

Combustible Duct Construction:

Combustible materials can be used for ductwork in limited situations, generally short runs of 2 meters or less, provided the construction, engineering, and performance requirements as outlined and intended by 46 CFR are satisfied. These "limited" situations shall include the following:

a. Combustible ducting shall be used only at termination points in the ducting network.

b. Combustible ducting shall not penetrate A-class or B-class boundaries including B-class continuous ceilings. The combustible portion of the duct shall terminate at least 600 mm from A-class or B-class boundaries as measured along the duct.

c. Combustible ducting shall have interior and exterior surfaces with a maximum flame spread rating of 20 and a smoke production rating of 10 or less in accordance with ASTM E-84 or meet the FTP Code Annex 1, Part 5

There are no limitations on the structural integrity or cross sectional area of such combustible ducting when of "limited use" in accordance with a., b. and c. above.

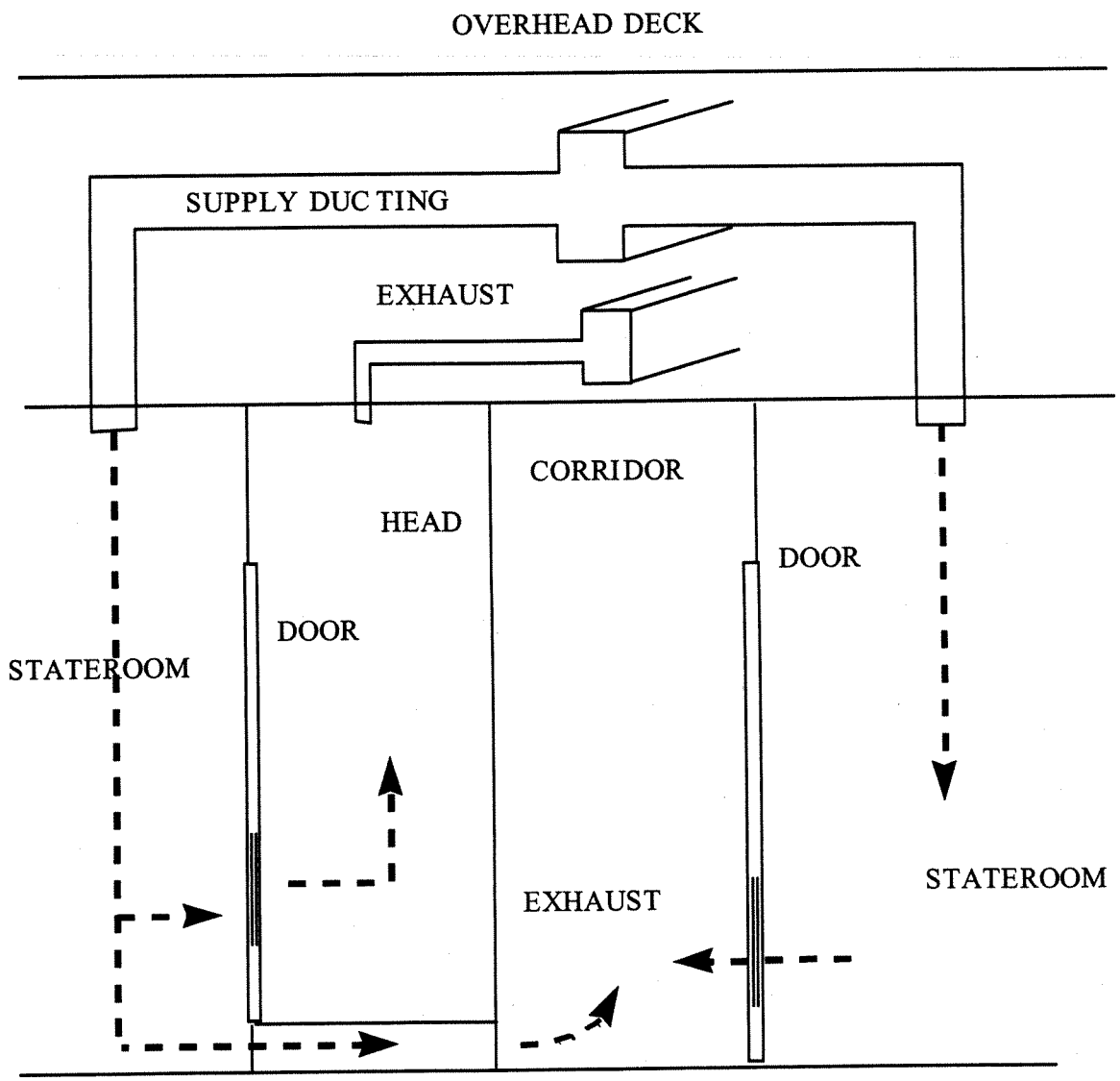

STATEROOM VENTILATION
FIGURE 3.7

Non-ducted Construction:

In some designs, air flow is accomplished by passing through compartments or concealed spaces without the use of a dedicated ducting system. The above mentioned stateroom arrangement is a good example in which the corridor is used for natural exhaust.

When air handling is accomplished using non-ducted construction the assumption that air handling systems have some inherent integrity is no longer valid. In this case, a penetration for air flow will provide substantially less resistance to the movement of smoke and flame. Given this situation, non-ducted construction may be permitted on a case-by-case basis only after review by the Marine Safety Center. The designer has the burden of proving such a design does not degrade the integrity of the barriers or egress routes.

The following arrangements are a minimum consideration for making such a proposal:

1. Non-ducted construction should be used only for exhaust of adjacent type 3, 5, or 8 accommodation spaces and low risk service spaces. The air flow may not pass through any compartments of greater fire risk.
2. This air should exit the vessel and should not be used for recirculation.
3. Unducted penetration of interior A-class or C-class smoke tight barriers is prohibited.
4. Penetration of B-class barriers is prohibited above one half the height of the barrier; consistent with the requirements for louvers.
5. Penetrations of C-class barriers need no special consideration.

Figure 3.8 shows a non-ducted ventilation arrangements that could be acceptable in accommodation spaces.

3.16 Ventilation Ducting Penetrations
Ref: 46 CFR 32.56-60, 72.05-50, 116.610
Test ASTM E-814, UL 555-S, SOLAS Res A.754(18)

Ventilation ducting penetrations shall be constructed such that the barrier fire integrity is not degraded. Arrangements other than those described in 46 CFR or detailed below may be considered acceptable if performance is proven through testing.

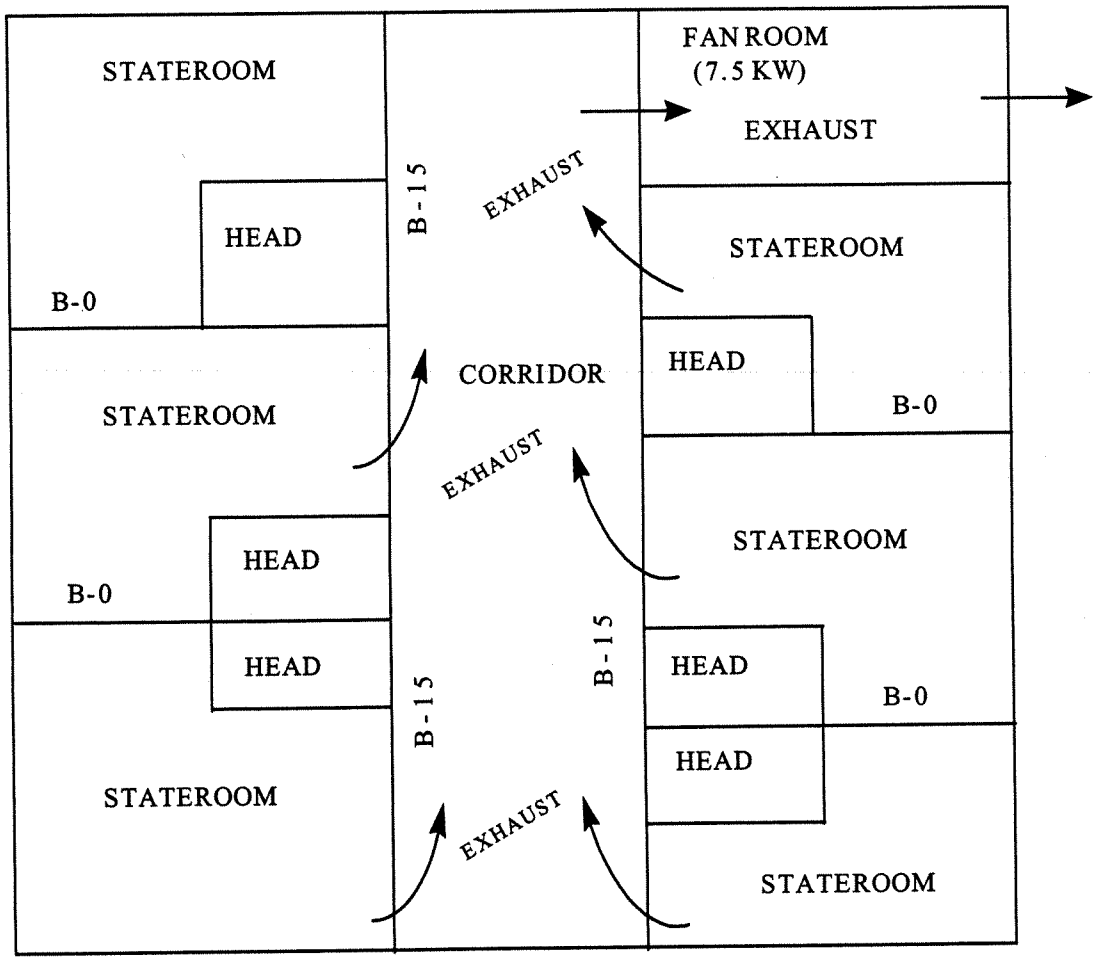

NON-DUCTED VENTILATION
FIGURE 3.8

Duct Penetration Construction:

The following discussion is based on conventional steel ducting (as defined in section 3.16). This assumes integrity based on steel construction of 0.73 mm thickness. If ducting of this construction is not used then the following requirements may not be sufficient to ensure integrity.

When insulation of the bulkhead is required, insulation of the ventilation penetration shall be to the same thickness as the bulkhead insulation and extended out 300 mm from the bulkhead on the same side of the bulkhead that is insulated. Furthermore, when a fire damper is installed on one side of a bulkhead for the purpose of protecting that bulkhead, the section of ducting

between the bulkhead and the damper shall be constructed and insulated to the same standard as the bulkhead thus preserving the intended integrity of the bulkhead and the fitting.

Additional requirements for insulating ducting and duct penetrations may exist in 46 CFR or SOLAS for certain high hazard locations such as machinery spaces and galley cooking equipment. Examples include 46 CFR 72.05-50(g), 32.56-60, or SOLAS II-2/16-3.1.4 which specify minimum insulation requirements when vent ducting serving machinery spaces and galleys pass through accommodation spaces.

A-class division penetrations:

For A-class boundaries the penetration should be tight fitting using one of the following methods; 1) welded; where welding will probably require a spool piece for added thickness, 2) bolted; where bolted flanges may connect directly to the bulkhead and shall be tight, or 3) a sleeve sealed with an approved fire stop sealant/arrangement to provide a seal around the duct. See figure 3.9 for details of A-class ducting penetrations.

According to 46 CFR 72.05-50(e) fire dampers are required in all MVZ penetrations including decks that form horizontal steps. Ideally, ventilation ducting should not pass through zones and thus ventilation penetrations should be a moot point.

Fire dampers are not specifically required in (non-MVZ) A-class division penetrations of bulkheads or decks except as stipulated in 46 CFR 72.05-50. In general, penetrations shall be tested in the standard fire test to prove performance. As a minimum prescriptive option, the Coast Guard will accept, without testing, penetrations of A-class divisions in which the ducting is conventional steel construction, properly fitted to the division, and fitted with a fire damper.

Fire dampers are not necessary when the ducting is A-class construction (minimum 3 mm thick steel) and passes entirely through a space without opening. However, as stated in both Subchapter H and K, all ventilation systems shall be fitted with some form of closure in a location that will shut off the supply of air to the space or group of spaces served by the ventilation system. In general, this requirement is met by installing a damper internally, or a vent cover externally, at the main inlet or outlet of the ventilation system. This closure should be in an accessible location outside the spaces being served.

It is considered imprudent for machinery space ventilation to open onto safety areas and refuge areas even when dampers are installed because of the intense heat and smoke that can be generated and exhausted from these fires. The designer is responsible, in this case, for ensuring that proper safety measures are taken.

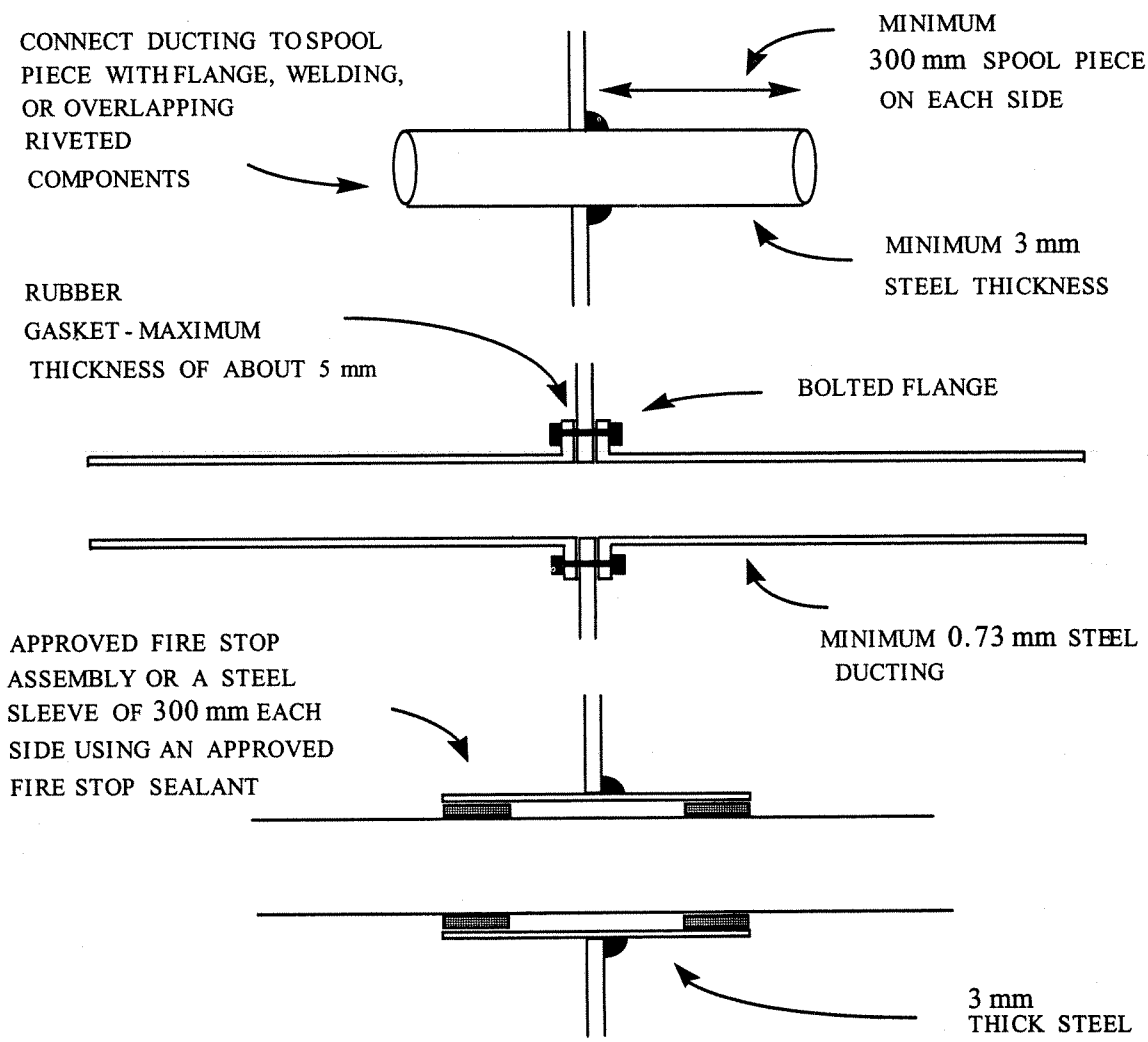

VENTILATION BULKHEAD PENETRATIONS
(A-CLASS)
FIGURE 3.9

B-class division penetrations:

For B-class bulkhead penetrations using conventional duct construction the penetration need only be close fitting. This could be accomplished with a simple cut-out (carefully sized and/or sealed with fiberglass tape or metal sheathing) or by using steel sleeves or any of the methods described above for A-class construction.

For B-class penetrations fire dampers are not necessary if the ducting is of conventional construction. Otherwise, a fire

damper may be necessary to ensure integrity in B-class bulkhead penetrations. Other equivalent means of protection may be acceptable provided that it is proven (via testing) not to degrade the performance of the bulkhead.

Special consideration should be given to ventilation ducting serving staterooms AND corridors because of the potential for smoke movement into the egress path. Barriers in these locations are B-class construction which, although not required to prevent the passage of smoke, do in fact slow smoke movement significantly.

Ventilation arrangements should perform similar to the divisions with respect to smoke movement. As an example, louvers or vents in the lower portion of a door reasonably meet B-class performance while jumper ducts in the top of the division do not meet the minimum performance. Jumper ducts and unprotected openings are never permitted in A-class construction.

C-class division penetrations:

For C-class construction no sleeve or spool piece is required regardless of duct construction. Fire dampers are not required in C-class construction penetrations. There is no requirement that C-class divisions prevent or resist the spread of flame or smoke.

For C-class smoke tight construction the penetration shall be sealed tight. Fire dampers are not specifically required in C-class smoke tight penetrations. However, integrity of the bulkhead with respect to smoke movement must be maintained. This can most effectively be achieved by using a ducting arrangement that does not serve both spaces divided by the smoke tight boundary. If the ducting serves both spaces, a smoke damper is required. In this case, the damper shall be manually operated locally so that those persons seeking refuge have the ability to close the opening themselves. This requirement is in recognition that smoke tight boundaries are normally used adjacent to refuge areas. Vent covers are acceptable for exterior refuge locations.

Smoke dampers do not have a specific construction standard but instead shall be rated by UL 555-S as type I-250 or II-250.

3.17 Fire Damper Construction
Ref: 46 CFR 72.05-50
Test ASTM E-814, UL 555

In theory, to prevent the passage of flame and smoke, a fitting should be tight. However, in practice, making damper closures tight is cost prohibitive and given the fact that the duct length

and construction helps to maintain the integrity of the barrier, closures need only be reasonably fitted with the casing as described below. When dampers are required, or used as an optional arrangement, the following minimum construction practices may be followed in lieu of fire testing.

A-class Construction:

As a minimum prescriptive requirement for A-class construction, fire damper blades and casings shall be constructed of 3 mm steel. A maximum gap of 3.2 mm between the blade and the casing is permitted. The components (i.e. springs, hinges, etc.) of the damper must be constructed of stainless steel or other steel, suitably coated to prevent corrosion.

As an alternative for A-class divisions, steel fire dampers listed by UL as 1-1/2 hour fire dampers are acceptable. These dampers must have the control mechanisms as required by 46 CFR and described in section 3.18.

B-class Construction:

For B-class construction, fire dampers shall be designed similarly to those for A-class except that the thickness of the steel used in the casing or damper blade can be reduced to a minimum 1.5 mm.

Alternatively, for B-class divisions, steel fire dampers listed by UL as 1 hour fire dampers are acceptable. These dampers must have the control mechanisms as required by 46 CFR and described in section 3.18.

3.18 Fire Damper Operation
Ref: 46 CFR 72.05-50, 116.600
Test ASTM E-814, UL 555

Non-MVZ bulkhead installations:

According to 46 CFR, fire dampers must be capable of manual (local) operation from at least one side of the division penetrated. This is normally accomplished using a wire and pully system connected to a lever. However; motors, electric solenoids, or pneumatics operated by push buttons or electric switches may be used in place of the traditional cable and pulley system. Such controls shall be fail safe (closed).

When manual (local) controls are installed, they should be located outside of the space being served by the ventilation.

With some arrangements, strict adherence to this policy could produce an ineffective system in spaces such as control stations, wheelhouses, and refuge areas where it could reasonably be expected that crew members or passengers would take refuge or which might be continuously manned during fires. In these situations, local manual controls need only be arranged to permit closure of fire dampers from inside the space being served by the ventilation or the exterior in the case of weather deck refuge areas. The manual closure mechanism should be designed to provide leverage for easy closure from a normal standing position.

MVZ bulkhead installations:

Fire dampers in MVZ divisions shall, in addition to the above requirements be:

- fitted with a (local) manual closure device on BOTH sides of the MVZ bulkhead in an accessible location with a visual indicating device showing whether the damper is in the open or closed position; and

- fitted with automatic closure mechanisms such as fusible links. 46 CFR 72.05-50 gives specific requirements for the operating temperature of the automatic closing mechanism in reference to fusible links - 74°C for normal locations and approximately 100°C for locations such as galleys. The link temperature requirement in 46 CFR 72.05-50 does not rule out the use of other initiating mechanisms such as smoke detectors or flame detectors except that the detection system must be fail safe; meaning that the damper must close automatically upon loss of power to the detector mechanism.

Indicating mechanisms:

The indicator (when required) may be located on the damper or at the manual control. The indicating mechanism should be simple and reliable, and like the manual control, should be easily accessible and in such a position so that the operator of the manual control has reliable feedback as to the closure status.

Options for operating/control mechanisms:

Local closure controls may be substituted by remote operation from a continuously manned control station. Using remote control, dampers may be closed in groups or individually but the arrangement should be such that the operator can clearly determine the position of the damper (open or closed).

These remote control fail safe designs will also satisfy the requirements for "automatic" operation and thus fusible links would not be required.

Dampers rated by UL, when used in lieu of the construction standard also require these control and indicating mechanisms. This can easily be accomplished using UL rated control mechanisms and the appropriate electric or pneumatic controls. Figure 3.10 shows typical arrangements of fire damper control mechanisms and indicators.

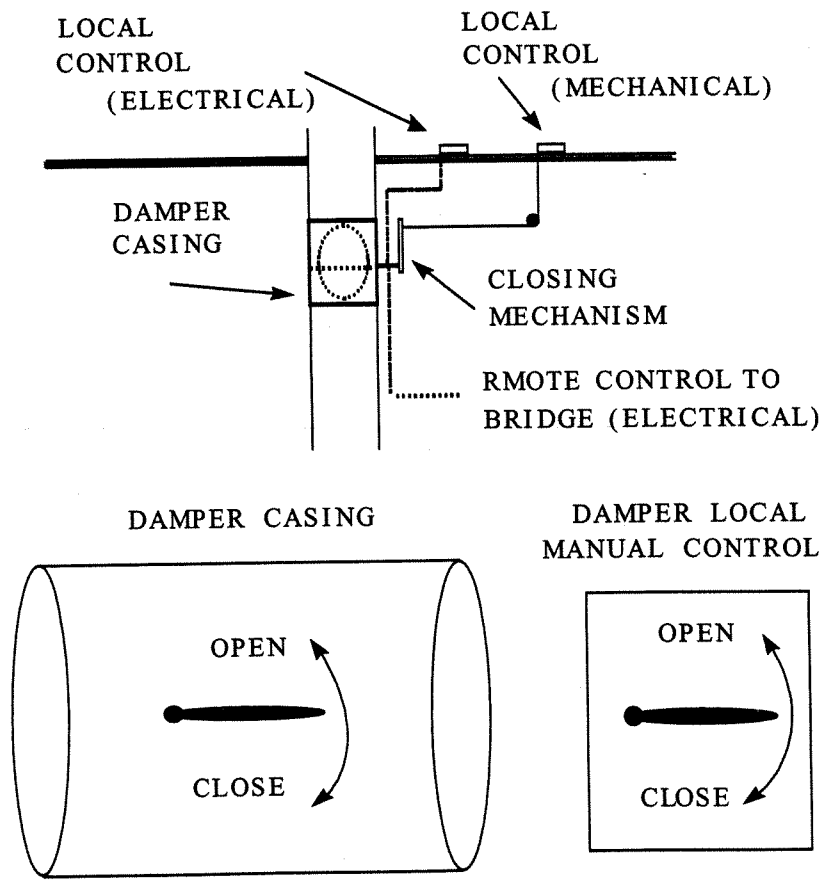

DUCT CLOSURE MECHANISM
FIGURE 3.10

3.19 Ladders and Stairtowers
Ref: 46 CFR 32.57-10(d), 72.10, 72.05-20, 92.07-10(d)(2), 108.143, 116.438
Test ASTM E-119 / E-84, IMO Res. A.653(16) / A.754(18)

Historically, many shoreside fires which resulted in a large loss of life were the result of egress paths being filled with smoke and/or flames because the egress path was unprotected or improperly protected. Egress routes on ships are vulnerable to the same problems. For this reason, it is the intent of shipboard structural fire protection to ensure that the means of egress, as provided by corridors, ladders and stairs, is adequately maintained until evacuation is complete. As an additional goal, structural fire protection should allow a protected and unobstructed access for manual fire suppression re-entry efforts after evacuation is completed.

Boundaries:

The insulation requirements for stairtower boundaries on passenger vessels is defined in tables 72.05-10 and tables 116.415 of 46 CFR. The underside of ladders shall be insulated to the same standard as the boundary when the ladder actually forms part of the boundary. In most cases this is not a concern because the stairs are entirely within the stairtower boundary.

The integrity of the bounding bulkheads must include protection from the heat, smoke, flame, and radiation which could affect the persons transiting the stairs. This means that:

1) fittings such as doors, ventilation, and cable penetrations must be appropriately rated or meet the minimum construction standards. Some exceptions for exterior doors may be permitted according to section 3.10 of this circular.

2) with the exception of a limited area of glass in doors as detailed in section 3.10 of this circular, the installation of windows is discouraged. If used, windows shall meet the full integrity of the bulkheads including fire integrity, temperature rise, passage of smoke, and thermal radiation criteria as outlined in section 3.11.

3) windows in exterior sideshell boundaries of stairtowers need not meet these criteria only if the window is not subjected to fire exposure from decks or sideshell openings below or nearby. In general, a fire exposure may exist if:
   - windows or openings from other spaces are directly below
   - open decks are located directly below, or
   - any structure has a view of less than 180 degrees to the stairtower boundary in which the window is fitted.

In any event, the designer shall calculate the fire exposure risk to these windows to prove performance.

Fire Risk Within Stairways:

With respect to the fire hazard within these spaces, it is generally understood that all combustibles are strictly regulated. Linings and interior finishes shall be approved under 46 CFR 164.012 for passenger vessels and cargo vessels. Furniture and furnishings are restricted as outlined in 46 CFR 72.05-55 and 116.423 for passenger vessels. The fire load, although not normally calculated, should be minimized with the goal of being similar to that of type 5A spaces.

These requirements will help to ensure that the fire does not originate in the egress path nor will it spread rapidly into or through the egress path during the time needed to complete evacuation.

Interior Ladders:

On vessels required to have a hull and superstructure of steel or equivalent material, the interior ladders shall also be steel or equivalent material. If the stairway is properly protected with structural fire protection and the stairway enclosure only opens into low risk spaces, then aluminum or other heat sensitive materials may be considered for use on a case-by-case basis.

Heat sensitive materials shall not be used if the stairs will be needed for fire fighting operations during or after a fire. Post fire evaluations have shown that fire fighting efforts involve the use of stairtowers for re-entry onto lower decks. These efforts are dangerous because of the intense smoke and heat issuing up the stairtowers. Under these conditions, common sense indicates that aluminum stairs would be dangerous and completely unacceptable.

Exterior Ladders:

There are no specific requirements for exterior (type 4) ladders. However, Type 4 stairs or ladders that are considered part of a required or designated egress path should preferably be constructed of steel having due consideration for the need to ensure the integrity of the means of escape.

Exterior ladders considered part of the egress path include:

- ladders used in egress calculations
- ladders from an open deck to an embarkation area
- ladders from an open deck to a refuge/safety area
- ladders marked on the evacuation plans as part of the primary egress routes.

Unenclosed storage of combustibles is never permitted under stairs regardless of the classification of the stair or ladder or its location. No storage (other than firefighting equipment) is permitted in stairtowers in accordance with 46 CFR 72.05-20(f).

3.20 Elevators
Ref: 46 CFR 72.05-20, 116.438
Test ANSI/ASME A17.1

Elevator requirements for passenger vessels are described in 46 CFR 72.05-20 and 116.438 including construction, fire integrity requirements and interior furnishings and finishes.

An elevator shaft is considered a type 2 space and must be constructed in accordance with tables 72.05-10 or 116.415. To

meet these requirements, the following arrangements are acceptable:

- self closing A-class doors installed at all levels consistent with the rating of the barrier, or

- the elevator opening must be within a protected and enclosed landing area (type 2 space) such as an elevator located entirely within a stairtower, or

- elevators built to ANSI/ASME A17.1 specifications with doors having a 1-1/2 hour rating. In this case, the trunk shall still be insulated in accordance with 46 CFR 72.05-10 or 116.415.

Other arrangements when the elevator serves only two decks or balconies may be permitted. Additional requirements for elevators serving machinery spaces or elevators on tank vessels may be applicable.

In any event, the elevator cab door is not required to be rated A-class when the above measures are taken to ensure deck-to-deck integrity. All material used in the construction of the elevator cab must be of approved noncombustible construction. Elevators are classified as a type 2 space and thus furnishings and veneers may be used in accordance with 46 CFR 72.05-55 or 116.423.

The above requirements apply to elevators, dumbwaiters, and lifts.

CHAPTER 4 ALUMINUM CONSTRUCTION

4.1 General Design Considerations
Ref: SNAME T/R Bulletin 2-21
Test ASTM E-119

The purpose of this section is to give a brief overview of aluminum construction. The focus of aluminum construction is providing thermal protection to the core so that the material is not degraded by the temperature in the furnace and thus meets the perforamce required of steel or equivalent material. The primary reference for insulation of aluminum is SNAME T+R Bulletin 2-21. The reader is highly encouraged to review this document to get a good understanding of the insulation problems characteristic to aluminum

Aluminum is a noncombustible material which is heat sensitive and thus must be insulated to meet the requirements of steel or equivalent material. In this regard, aluminum may be used in the construction of passenger vessels and cargo vessels. However, the standard fire test and SNAME T+R Bulletin do not account for the extreme fire hazards of fuel oil fires and thus aluminum is not permitted in the construction of tank vessels or tank barges.

When aluminum is used as the construction material it cannot be assumed that the structure is inherently resistant to the standard fire test. This is because the aluminum is susceptible to melting at temperatures below that encountered in the furnace test. Considering that one hour is the longest period of time any shipboard assembly is required to maintain its integrity under fire conditions, temperatures in excess of 900°c can be expected. This temperature is well below the melting point of steel; thus if a fire should occur on either side of a steel barrier, structural integrity should be maintained. Structural insulation, if required, can be installed on only one side of a steel division. For aluminum, however, a different situation exists. To maintain its structural integrity under fire conditions for more than several minutes, the aluminum must be insulated to keep the aluminum core temperature below 230°c (200° c plus ambient). Although the melting point of aluminum is much higher, failure of aluminum bulkheads or decks under loaded conditions may occur near this temperature.

Since it cannot be predetermined from which side the fire exposure will occur, a minimum amount of insulation must be applied to both sides of the aluminum so that its core will be sufficiently protected to withstand a fire exposure from either side; except in a few limited cases where exposure from only one side is reasonably possible. In addition, extra structural insulation may be required to limit the heat transfer through the

assembly to maintain specified temperatures on the unexposed side of the assembly (T-rating).

Under the core temperature rise criteria, an aluminum plate of 5 mm thickness actually needs structural insulation with a core insulation value (Fc) of .72 S just to be rated as A-0. To make such an assembly A-15, A-30, or A-60, additional insulation must be added to both sides; which is notably different than that which would be expected using steel construction. On pages 6 and 7 of SNAME Bulletin 2-21, an explanation is given detailing how the insulating value of an aluminum assembly is affected by applying structural insulation. Depending upon the configuration of the insulation and aluminum plate, the insulating value of the assembly may increase or decrease. As a result, aluminum bulkhead and deck assemblies may have different fire endurance capabilities, depending upon which side is exposed to the fire. Appendix C of Bulletin 2-21 depicts a variety of bulkhead and deck assemblies, showing the total insulating value of the assembly (Ft), and the core insulating value (Fc) provided by the insulation on each side of the aluminum plate.

Figure 4.1 is an excerpt from SNAME T+R Bulletin 2-21, Appendix C showing typical aluminum bulkhead assemblies which are considered acceptable to meet the Coast Guard SFP requirements and the steel or equivalent material requirements. These assemblies were developed by extrapolating the results from a limited number of samples tested in the research project.

When planning aluminum construction, formidable amounts of insulation may be required to comply with the current regulations for structural fire protection. For example, consider that a common bulkhead separating two spaces is required to be A-60 class. Since it cannot be positively determined whether a fire is to occur in one space or the other, A-60 performance must be provided on both sides of the bulkhead.

The core temperature criteria and the bi-directional SFP requirements make designing and constructing with aluminum different from conventional steel ship construction and requires careful attention to the guidelines on aluminum construction as discussed below.

4.2 SNAME Technical Bulletin 2-21

Ref: 46 CFR 72.05-10, Bulletin 2-21 pg 9-10
Test ASTM E-119

The Society of Naval Architects and Marine Engineers conducted extensive testing in the late 1960's and subsequently drafted guidelines known as the "Aluminum Fire Protection Guidelines". This bulletin outlines two methods for a systematic approach to

predicting the required insulation. The first method is empirical in nature based on extensive testing and is considered traditional. The second method involves analysis of the actual fire load and is considered alternative.

THIS CLASS AND Fc APPLY IF FIRE IS ON SMOOTH SIDE →

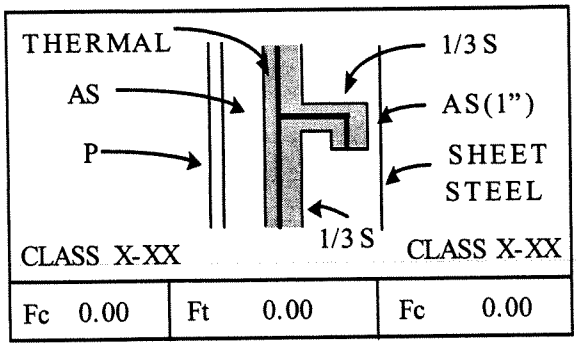

← THIS CLASS AND Fc APPLY IF FIRE IS ON STIFFENER SIDE OF BULKHEAD

KEY TO SYMBOLS

Ft	-TOTAL INSULATION VALUE OF ENTIRE DIVISION
Fc	-EFFECTIVE INSULATION VALUE OF INSULATION PROTECTING THE ALUMINUM CORE
P	-LINING PANEL THICKNESS (46 CFR164.008)
S	-STRUCTURAL INSULATION THICKNESS (46 CFR 164.007)
AS	-AIR SPACE
THERMAL	-INCOMBUSTIBLE INSULATION (46 CFR 164.009)

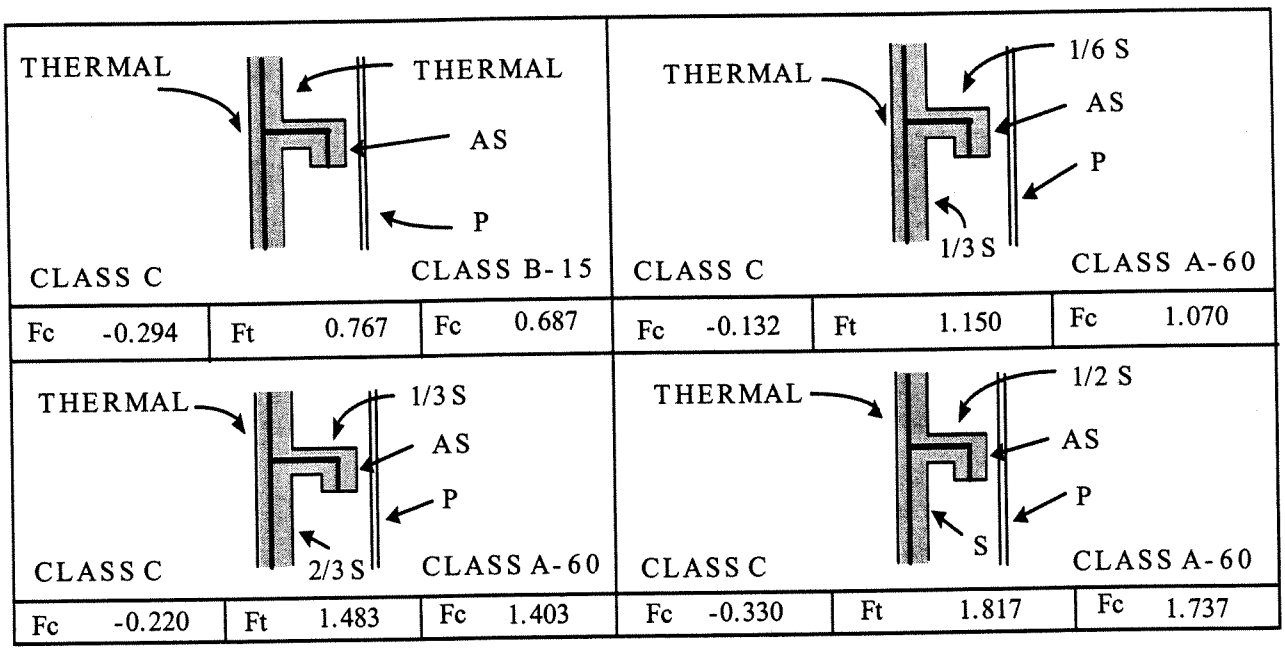

ALUMINUM INSULATION DETAIL

TAKEN FROM SNAME TB2-21 (pg21,24)

FIGURE 4.1

The designer should be cautioned that each method as presented in the bulletin has distinct limitations as noted below.

Traditional Approach:

This approach is based on the SFP requirements for bulkheads as outlined in 46 CFR. The thickness of insulation to achieve 60 minutes of thermal integrity is defined as "S" and the requirements for 15 minutes and 30 minutes is defined as a fraction of "S" (table 1 of the Bulletin).

Based on this approximation, the Fc and Ft values for bulkheads are derived in tables 2, 3, and 5 of the Bulletin. Values are also given for stanchions and columns in table 4 of the Bulletin. These values are based on the experimental results and are considered minimum prescriptive requirements. The air space (AS) as designated on the drawings are a minimum 2.5 cm as outlined on page 10 of the Bulletin.

Appendix C of the Bulletin provides details of typical aluminum bulkheads that are considered acceptable arrangements. The details involve minimum core aluminum thickness of 5 mm and various insulation arrangements. Page 21 of the Bulletin shows how to use the details which include the classification of the bulkhead and the Fc rating for each side and the associated Ft, or total insulating value, for the structure.

It is envisioned that these details given in Appendix C will be used almost exclusively by the designers. However, other arrangements will be considered based on the calculation methods presented in the bulletin or with the submission of test reports using the standard fire test to prove integrity of the structure. For example, the Bulletin does not recognize carpet as an "acceptable" method for insulating deck assemblies from above. However, such an arrangement could be proven acceptable through testing.

Any structure using aluminum of less than 5 mm will require testing regardless of the arrangement of insulation (except for C-class and C-class smoke tight bulkheads). Aluminum greater than 5 mm may be used in the arrangements in Appendix C but no additional credit will be given for the Fc or Ft values unless testing is performed to prove additional performance.

It is recommended that the designer discuss the proposed arrangement with the MSC prior to testing so that discrepancies can be avoided before expensive testing is conducted.

Alternative Approach:

In some circumstances the additional burden of insulating both sides of an aluminum structure may be eased by using the

alternative approach. The alternative approach is used almost exclusively for superstructures, voids, tanks, and bilges as justification for using uninsulated aluminum. It is seldom used on other interior locations because there is little advantage as discussed below.

If by using the fire load calculation technique explained in SNAME Bulletin 2-21, it can be determined that the fire loading in one of the spaces is insufficient to warrant a particular insulation scheme on both sides of the bulkhead, a lower insulation value may be used on one side. To maintain the minimum requirement of the regulations, one side of the bulkhead should still be insulated in accordance with the appropriate tables. From the appropriate SFP, the required endurance of the bulkhead can be determined and the required insulation is then installed on the side of the bulkhead or deck facing the space with the more severe fire loading. The insulation value for the remaining side of the assembly is then calculated based on the lower fire load of that space. This approach is used to justify some exceptions as discussed later under specific design considerations.

The following spaces should not apply the alternative fire loading approach because, in theory, the approach is not applicable and because, in practice, the approach will result in no significant advantage or reduction in insulation:

- Machinery spaces or high hazard spaces
- Spaces containing flammable liquids
- Large open spaces (atria/balcony spaces) *
- Spaces open to weather *
- Spaces with non-uniformly distributed fire loads

* Large open spaces and spaces open to weather may or may not benefit from this approach because the fire hazard may be over-estimated. The alternative approach works best when the space in question has obviously no fire load such as exterior spaces and water tanks. This is because the Fc value requires extensive insulation just to be A-0 and thus the reduction of "T" ratings does not save much in insulation thickness.

4.3 Limitations to Both Approaches
Ref: 46 CFR 72.05-10, Bulletin 2-21 pg 1-8
Test ASTM E-119

As noted above, there are limitations to both approaches which should be recognized by the designer. However, the methods as outlined in the bulletin are sufficiently accurate to be accepted by the Coast Guard as approved methods for aluminum construction.

Traditional Approach Limitations:

The traditional approach is based on the groupings of various spaces and the predetermined degree of integrity required as outlined in 46 CFR 72.05-10 and tables 72.05-10(d)-(g). Likewise, the tables are based on the expected fire severity as tested experimentally using steel construction in ASTM E-119.

Traditional approach limitations include;

1. A simplified approximation of insulating effectiveness is used based on the assumption that the time to exceed the failure criteria is proportional to the square of the insulation thickness.

2. The data collected is not all-inclusive as is always the case with empirical data. The application of this approach must be consistent with the variables tested.

3. Any variation from the pretested arrangements will require testing or numerical heat transfer analysis at the least. This could negate the cost savings associated with using the traditional approach.

4. Extrapolation of the test results increases uncertainty.

Alternate Approach Limitations:

The alternate approach is based partially on the experimentation that was used to develop the barrier ratings as outlined in 46 CFR 72.05-10. Instead of using the predetermined values, the alternate approach directly interpolates the data to get more precise values. The limitations to this approach thus involve the applicability of this data. Alternative approach limitations include;

1. The concept of "fire load" cannot completely be described on the basis of fuel mass per unit area.

2. The theory that relates fire load to equivalent furnace time (Ingberg's equal area hypothesis of 1928), although surprisingly robust and thus well accepted for lack of a better method, is unscientifically founded and possibly not even applicable to compartments of modern construction and modern combustibles.

3. Fire loading as presented in the bulletin applies only to relatively small, near cubic, ventilated compartments with relatively uniformly distributed cellulosic fire loads of moderate quantity. Spaces containing flammable liquids, and open spaces are not applicable, or at the least, such extrapolation of the data has not yet been validated.

4. This approach requires more work by the designer and results in a significant operational restriction in that the fire loading of the space cannot be increased without installing more insulation.

4.4 Specific Design Considerations
Ref: SNAME Technical Bulletin 2-21 pg 9-15
Test ASTM E-119

SNAME Technical Bulletin 2-21 gives the general guidance on insulation procedures; however performance desired is essentially unchanged from that of steel construction. Some additional guidance is outlined below:

1. When insulation is not applied equally to both sides, high hazard spaces such as machinery spaces (adjacent to a tank or void) should be insulated "primarily" from the inside while control stations (adjacent to an accommodation space) are "primarily" insulated from the outside. This general procedure accounts for the expected direction of fire spread and is not an excuse to decrease or eliminate certain insulation requirements.

2. Decks should be insulated from the underside. In addition, approved deck coverings should be applied when the fire hazard from above is considered high such as a vehicle deck. Otherwise, for interior accommodation and service spaces, any deck covering, overlay, or deck surface finish of at least 6 mm in thickness is acceptable for insulating the upper side of the deck except for carpet, carpet padding, and vinyl tile unless these materials can be shown to provide adequate insulation through testing.

3. Extremely low fire hazard spaces (less than 2.5 kg/m^2) such as water tanks and voids need not be insulated while fuel tanks should be insulated on the exterior if insulation is required.

4. The overhead and sides of non-loadbearing canopies need not be insulated. However, it is the responsibility of the designer to address the issue of evacuation of the area prior to failure caused by the worst credible fire scenario. This would be especially applicable to large canopies or areas where egress may be expected to be delayed. Loadbearing canopies shall be considered structural members, classed accordingly with respect to structural fire protection, and constructed and insulated according to that classification. Loadbearing includes structures that support liferafts, life saving equipment, walkways, etc.

5. Shell plating and hull framing below the main deck should be insulated to A-0 for a distance of at least 30 cm below the lightship waterline. Interior bulkheads that extend into bilge areas need only be insulated to the lowest deck level.

6. Insulation in machinery spaces shall not extend into the bilges where it may become oil soaked. Oil soaked insulation requires immediate replacement.

7. Bulkheads and decks separating interior spaces from exterior weather areas shall be insulated on the interior side. This is under the assumption that the exterior space essentially has no fire load. See the discussion below on superstructures.

8. Penetrations must comply with the performance standards required of the division. This involves construction of the fitting and insulation on the fitting in accordance with the procedures in this circular.

9. Special consideration must be given to the use of aluminum in locations where the standard fire test does not accurately represent the fire hazard. For example, fuel oil fires in engine rooms or pool fires on tank vessels will generate intense fire conditions that may not be adequately resisted by insulation of a thickness approved in the standard fire test. Additional protection may be needed in these situations or aluminum construction may not be appropriate.

Aluminum Superstructures (exterior insulation requirements):

In general, aluminum superstructures do not need to be insulated from the outside. This assumes that there is no fire hazard from the exterior (based on alternative design approach). This is not the case, for example, when:

1. Large openings from vehicle decks could allow flames to extend up to aluminum superstructures above

2. windows in the side shell are not rated and would permit a fire in an accommodation space below to vent or extend flames to aluminum superstructures above

3. Islands supporting the navigating bridge or accommodation spaces are located on open vehicle decks or cargo areas. This includes workboat superstructures that may push or tow barges alongside.

In these cases, insulation must be provided to the exterior accordingly or other actions must be taken to ensure the integrity of the superstructure. In some cases there may be only an exterior radiation hazard such as a barge fire with large flames extending upward adjacent to the workboat's superstructure. In this case, exterior insulation of thickness "S" is no more effective than an exterior radiation barrier such as water deluge spray or other opaque barrier. The exterior fire hazard should be very conservatively estimated when the aluminum superstructure is load bearing or is used to accommodate passengers or control stations.

CHAPTER 5 COMBUSTIBLE CONSTRUCTION

5.1 General Design Considerations

Ref: 46 CFR 164.009
Test SOLAS Res. A.472(XII)

This chapter is intended to apply specifically to fiberglass or other fiber materials with organic resin binders (FRP) used in the construction of a vessel primarily in the hull, structural bulkheads, decks, and deckhouse. Wood construction or wood-fiberglass composite construction could follow the same basic principles outlined in this section when such construction is permitted.

Combustible material is defined as any material that fails to meet the definition of noncombustible as defined in 46 CFR 164.009 or the IMO FTP Code. Details of noncombustibility are found in section 2.1 of this circular.

Combustible materials, like FRP's, may vary in properties during construction. For example, the ratio of resin mixed with hardner, or the glass fiber content at various locations in the laminate may vary purposely or accidentally. This could change the fire resistance and structural properties of the material. Also, core materials and substrates influence the material's reaction to fire. These factors should be carefully considered when approving such materials for use onboard merchant vessels.

5.2 Subchapter T Passenger Vessels

Ref: 46 CFR 177.410, NVIC 8-87
Test MIL-R-21607, ASTM E-84

Subchapter T vessels, including the hull, structural bulkheads, decks and deckhouse may be constructed of fibrous glass reinforced plastic (FRP) using fire retardant resin meeting the specific requirements in 46 CFR 177.410(b). General purpose resins may be used in accordance with the additional details of 46 CFR 177.410(c)and the limitations of 46 CFR 177.410(d).

Other options proposed by the designer to meet the intent of low flame spread surfaces may be considered by Commandant (G-MSE-4) based on an engineering analysis. Intumescent coatings are an example of technology that could possibly produce an equivalent level of safety. However, even such coatings require careful consideration because of durability and potential bonding problems.

5.3 Subchapter K and H Passenger Vessels
Ref: 72.05-10(a), 116.300

Passenger vessels subject to Subchapter K or H or to which 46 CFR 72.05 applies, shall not be constructed with combustible materials. It is possible in Subchapter K to use the High Speed Craft Code (HSC Code) as an alternative to this restriction but this may be difficult to accomplish because of the stringent requirements in the HSC Code. The use of "fire restricting material" for construction of high speed craft involves a balance of safety features using a systems approach. On the other hand, the definition of a "material equivalent to steel" for construction of traditional Subchapter K or H vessels is an entirely separate issue and presently includes the criteria of noncombustibility by both U.S. and SOLAS interpretations.

5.4 Cargo Vessels (vessels other than passenger vessels):
Ref: 46 CFR 32.57-10(a), 90.07-10(a), SOLAS II-2 Parts C and D

Subchapter I vessels:

The hull, superstructure, structural bulkheads, decks, and deckhouses shall be constructed of steel. Alternately, Commandant may permit the use of other suitable material in special cases, having in mind the risk of fire. There is no specific policy on where and when combustibles may be used so that such use would require a proposal and engineering analysis by the designer.

It is envisioned that combustible construction may be used in limited cases where the risk of failure during fire is of little consequence to the overall safety of the vessel. This might include hold covers, hatches, or portions of the deck house.

This policy does not apply to vessels requiring a SOLAS certificate because SOLAS 74 as amended does not permit combustible construction in the hull or superstructure

Subchapter D vessels:

Although there is a much greater fire hazard which favors the need for steel or equivalent construction in various parts of tankers, Commandant may permit the use of other suitable materials as noted above. However, because of the increased fire hazard associated with hydrocarbon fuels, the use of combustible construction will, in general, be prohibited. Also as noted above, SOLAS has no provisions for combustible construction.

5.5 High Speed Craft
Ref: SOLAS Chapter 10

For high speed craft (HSC), SOLAS accepts combustible construction under the definition of "fire restricting material". This is done considering all the other systems and restrictions placed on such vessels and uses a "total systems" approach involving the ship, its environment, operating area, and rescue resources available. The definition of "fire restricting material" can be found in section 7 of Chapter 10 of SOLAS 74 as amended in 1994.

The sections of the HSC Code (chapter 10 of SOLAS) that describe the requirements for fire restricting materials and furnishings reference specific SOLAS Resolutions on fire test standards. These fire test standards would also be considered appropriate for U.S. flagged vessels built to the HSC Code. However, it is possible that U.S. test procedures could be accepted in substitute. Specific guidance on the use of the HSC Code is published by Commandant (G-MSE-1).

CHAPTER 6 SPECIFIC VESSEL CONSIDERATIONS

6.1 General Requirements
Ref: 46 CFR Subchapter H

Caution is required when applying specific requirements in this circular to vessels other than Subchapter H passenger vessels because the Subchapters other than H are not always explicit nor consistent with the SFP philosophy in Subchapter H. In cases when requirements are not clear nor consistent, this circular may be used for guidance. The definitions in 46 CFR 72 and in this circular (which were developed primarily for passenger vessels) should be applicable except when specifically modified.

For example, the definition of an "approved finish" or "fire resistant furniture and furnishings" remains unchanged when invoked in Subchapter K or D unless the text of these Subchapters specifically modifies the definitions.

Other Subchapters including I-A and C may occasionally address structural fire protection in which case guidance from this document would be appropriate. For example, Subchapter C, paragraph 28.380 discusses general structural fire protection and paragraph (e) specifically uses the term "noncombustible". The term noncombustible is defined in this circular in accordance with 46 CFR 164.009.

The following sections briefly discuss some of the different requirements for vessels that may or may not be subject to some of the requirements in 46 CFR Subchapter H.

6.2 Small Passenger Vessels
Ref: 46 CFR 116, 177

Small passenger vessel regulations as outlined in Subchapter T and K derive most of their SFP requirements from Sub H. In some cases, 46 CFR Part 72 is specifically referenced and in other cases the requirements are rewritten or specifically modified.

Subchapter K is particularly proactive about rewriting specific requirements on structural fire protection. This practice can lead to some confusion if the reader is not careful to differentiate. For example, the definitions of Part 114 include slightly modified definitions of Control Stations, Accommodation Spaces, and Service Spaces. The result is that space designations as commonly used in Subchapter H are not necessarily the same in Subchapter K.

6.3 Cargo Vessels (other than tankers)
Ref: 46 CFR 92.05, 92.07

Subpart 92.05 and 92.07 discuss structural fire protection for Cargo vessels other than tankers. The definitions make reference to terms used in the SFP requirements for passenger vessels.

The structure of the vessel is not required to be classified (A-class or B-class) unless specified in 46 CFR 92.07-10. Most of the structural fire protection classifications are for the accommodation spaces and service spaces. All other bulkheads in accommodation and service spaces not specifically required to be A-class or B-class shall be C-class. Table 6.1 provides a summary of requirements for barrier construction and interior furnishings and finishes.

For cargo vessels (including tankers), it is reasonably assumed that "steel construction" of the hull and superstructure will be of sufficient integrity that flame and smoke movement will at least be slowed. However, "Steel construction" does not mean the same thing as A-class or even B-class construction. This means that any division which is not specifically classified does not need to be fitted with fire dampers, fire stops, or other devices or construction methods for the purpose of preventing the passage of flame and smoke.

The regulations for cargo vessels and tank vessels make specific use of this concept, especially in the cargo areas. However, it is considered prudent to construct these "steel" divisions similar to A-class standards including "reasonable" penetration integrity to prevent or slow the passage of flame or smoke. Furthermore, it is recommended that any insulation of cargo holds is accomplished with noncombustible insulation. When combustible insulation is used care should be taken during maintenance operations such as welding or cutting to ensure the materials are not ignited. See section 2.6 for details.

The requirements for structural fire protection as outlined in SOLAS (method IC) are considered as an equivalent alternative to CFR and may be used in their ENTIRETY in place of the requirements in CFR for SFP. In this case, compliance with SOLAS (for materials and products) shall be through the usual approval process as outlined in 46 CFR 159. IMO fire test procedures should be used to satisfy IMO requirements. Deviation from this policy should be discussed with the MSC during plan review.

Furniture and Furnishing Requirements:

All accommodation spaces are permitted to have furnishings and finishes similar to type 7 spaces. Corridors and stairway enclosures shall be restricted to approved interior finishes including bulkheads, ceilings, and carpet. Concealed spaces in accommodation, service and safety areas shall have approved

finishes. All carpets and mattresses shall at least meet the requirements of 16 CFR as described in section 2.9 and 2.10 of this circular.

Fire load calculations are not required but care should be taken to ensure the combustibles do not cause an unnecessary fire hazard. For example, unoccupied staterooms shall not be used for the storage of combustibles such as cleaning supplies, excess furniture, or piled storage of papers and books.

SUBJECT	TANKER	CARGO
CEILINGS, LININGS INSULATIONS, PIPING AND DUCTING LAGGING	46 CFR 32. 57 - 10(d)(7)	46 CFR 92. 07 - 10(d)(7)
SHEATHING, FURRING INCIDENTAL TO SECURING BULKHEAD LININGS OR INSULATIONS	46 CFR 32. 57 - 10(d)(8)	46 CFR 92. 07 - 10(d)(8)
INTERIOR FINISHES - NOT INCLUDING STAIRS, CORRIDORS OR HIDDEN SPACES	46 CFR 32. 56 - 50	46 CFR 92. 07 -10(d)(9)
INTERIOR FINISHES- SPECIFICALLY STAIRS, CORRIDORS AND HIDDEN SPACES	46 CFR 32. 56 - 50(b)	46 CFR 92. 07 - 10(d)(9)
DRAFT STOPS	46 CFR 32. 56 - 45	SAME REQUIREMENTS AS TANKERS
LAMP, PAINT, AND OIL LOCKER CONSTRUCTION	46 CFR 32. 57- 10(b)	46 CFR 92. 07 - 10(b)

SFP REQUIREMENTS FOR TANKERS AND CARGO VESSESLS
TABLE 6.1

SUBJECT	TANKER	CARGO
HULL, SUPERSTRUCTURE, AND BULKHEAD CONSTRUCTION	46 CFR 32. 57- 10(a)	46 CFR 92. 07 - 10(d)(7)
INTERIOR BULKHEAD CONSTRUCTION AND COMPARTMENT DIVISIONS	46 CFR 32. 57 - 10(c) 46 CFR 32. 57 - 10(d)	46 CFR 92. 07 - 10(b) 46 CFR 92.07 - 10(c) 46 CFR 92. 07 - 10(d)
STAIRWAY AND STAIRTOWER CONSTRUCTION	46 CFR 32. 57 - 10(d)	46 CFR 92. 07 - 10(d)(4)
DECK COVERINGS	46 CFR 32. 57 - 10(d)(6)	46 CFR 92. 07 - 10(d)(6)
RUGS AND CARPETS	STAIRS AND CORRIDORS SHALL BE LOW FLAME SPREAD	STAIRS AND CORRIDORS SHALL BE LOW FLAME SPREAD

SFP REQUIREMENTS FOR TANKERS AND CARGO VESSESLS
TABLE6.1 (CONT.)

6.4 Tankers
Ref: 46 CFR 32.56, 32.57

Subparts 32.56 and 32.57 discuss the structural fire protection requirements for tank ships. These requirements basically include those for cargo vessels plus some additional requirements. These additional requirements are intended to

compensate for the additional hazards associated with carrying large quantities of combustible liquids.

Some of the additional requirements as outlined in Subpart 32.56 and 32.57 include arrangements for accommodation spaces and control stations and additional structural insulation and integrity requirements for portions of the superstructure. Table 6.1 provides a summary of requirements for barrier construction and interior furnishings and finishes.

The requirements for structural fire protection as outlined in SOLAS are considered an equivalent alternative to CFR and may be used in their ENTIRETY in place of the requirements in CFR for SFP. In this case, compliance with SOLAS (for materials and products) shall be through the usual approval process as outlined in 46 CFR 159. IMO fire tests should be used to satisfy IMO requirements. Deviation from this policy should be discussed with the MSC during plan review.

The restrictions on finishes as discussed above for cargo vessels also applies to tank vessels.

6.5 High Speed Craft
Ref: SOLAS 74 as amended in 1994 Chap 10

The purpose of this code has often been misunderstood and the work involved by the designer often underestimated. In the first section of the code, titled "Approvals", there is a statement: "The owner of a craft should accept the obligation to supply sufficient information to enable the administration to fully assess the features of the design". It is strongly recommended that the owner and administration and, where appropriate, the port state, commence discussion at the earliest possible stage so that the administration may fully evaluate the design in determining what specific requirements should be applied to the craft to achieve the required level of safety.

The code, when used, shall be used in its entirety. No vessel is obligated to build to this code and the designer may choose instead, the conventional vessel requirements. The specific fire protection requirements are contained in section 7 of the code and are beyond the scope of this circular.

The terms "fire restricting material", "fire resistant divisions", and "furniture and furnishings of a reduced fire risk" are specifically defined in the HSC Code, FTP Code, and related IMO Resolutions and Circulars.

6.6 Fishing Vessels
Ref: 46 CFR Part 28

In general, there are no structural fire protection requirements for fishing vessels. However, newer fishing vessels complying with 46 CFR Part 28, Subpart D, do have some basic requirements depending on the number of individuals onboard. For the purpose of complying with 46 CFR 28.380 many of the definitions and explanations in this circular are applicable.

It is recommended that all fishing vessel owners give due consideration to the precautions set out in 46 CFR 28.380. In any case, good house keeping practices are perhaps the most important aspect for ensuring fire safety.

Some of the particular problems for fishing vessels include; excessive storage of combustibles in living spaces, combustible insulation in engine compartments, combustible insulation in cargo holds, and heat sources such as engine exhausts in contact with combustibles.

6.7 Mobile Offshore Drilling Units
Ref: 46 CFR Subchapter I-A

The SFP requirements for these vessels is contained in 46 CFR Part 108 which uses many of the same definitions as outlined in Subchapter H. The primary emphasis is on the safety of the accommodation spaces including construction and material properties. The hazards associated with these vessels can be divided into two types of hazards.

The first hazard is a typical accommodation space fire hazard in which detection and evacuation is critical to life safety. This situation is identical to the typical accommodation space fire hazards on other vessels and thus the requirements for structural fire protection in Subpart B are similar to the requirements for other vessels; particularly cargo vessels.

The second hazard is a fire or explosion in the drilling or processing areas which may affect the accommodation modules. In this case, consideration should be given to the durability and thermal resistance of the exterior portions of the accommodation module; especially those portions facing the drilling and process areas.

However, it should not be assumed that any portion of the exterior of the module is too remote to be affected by a fire or explosion. This is because hydrocarbon releases are often of

sufficient quantity that combustion may occur at distances away from the source of the release. This is particularly a concern when there is a delayed ignition in which combustion may occur when the released hydrocarbons find sufficient oxygen to sustain combustion. Also, the momentum of pressurized releases can cause significant flame extension above, below, or around accommodation modules.

Because of the complex and varied industrial environment, it is recommended that the owner/operator ensure proper structural fire protection is provided commensurate with the hazard even when this may be in excess of the minimum requirements set out in 46 CFR. Likewise, deviation from the SFP requirements is sometimes granted on a case-by-case basis. This is done after due consideration is given to the fire hazard associated with the vessel's operation and general arrangements.

6.8 Vehicle Spaces
Ref: 46 CFR 72.05-10(b), 116.415(d)(2)

A vehicle space is defined as a space intended for the carriage of motor vehicles with fuel in their tanks for their own propulsion, into and from which such vehicles can be driven and to which passengers may or may not have access. Normally a vehicle space will have the same type of vehicular traffic as that found on roads including cars, trucks, vans, motorcycles, and tractor trailers. This definition does not apply to RO-RO cargo spaces which are not intended for public transportation and are not accessible to the public.

Fire Hazard:

The fire expected from burning vehicles is not the same as that which is expected in conventional accommodation spaces. This is tremendously important because the basis for SFP was derived from fire testing of accommodation space type fire loads as discussed earlier. Some of the biggest differences are listed below:

- The possibility of combustible or explosive atmospheres
- Rapid increase in fire size from flammable liquid spills
- Combustion energies twice that of conventional fuels (wood).
- Intense burning and heat fluxes in low locations and corners.
- Radiative heat fluxes significantly greater than from conventional wood fires

These differences can result in hazards to the structure not normally considered in the traditional SFP design.

Horizontal Boundaries:

The preference that vehicle spaces be open without transverse barriers is in conflict with traditional barrier arrangements. The biggest conflict arises with MVZ boundaries. The solution to the subdivision problem involves the construction of horizontal fire zones to isolate the vehicle space from the remaining sections of the vessel providing an equivalent level of safety. These boundaries are rated in accordance with 46 CFR table 72.05-10(f) or table 116.416(c) as applicable. All requirements relating to the construction and penetration of MVZ barriers shall also apply to these horizontal fire barriers bounding vehicle spaces.

It should be noted, however, that simply adding horizontal boundaries by themselves may not be adequate compensation since it addresses only one aspect of fire hazard mitigation.

Insulation Requirements:

Vehicle spaces can be subjected to intense fires involving vigorous burning on the underside of vehicles. This results in a fire hazard to the deck that may not be typical of normal furnishings. For this reason, aluminum or FRP decks must be insulated on the top side or protected with active systems designed specifically to protect the deck from collapse due to the fire hazard. The duration required is at least 60 minutes (core protection) based on a minimum A-0 construction as required in table 72.05-10(f). Exceptions or alternatives may be permitted on a case-by-case basis by MSC during plan review.

It should be noted that the HSC Code specifically waives this requirement on the basis that the failure of the deck from the fire exposure will occur after passenger evacuation, or at the least, not affect passenger evacuation. This theory acknowledges the loss of the space, and probably the vessel, while focusing on saving the people. This theory is applicable only to HSC and does not necessarily apply to traditional vessels constructed under Subchapter H, K, or SOLAS Chapter II-2.

Open Vehicle Spaces:

These spaces are classified as type 13 spaces because the open nature reduces the hazard associated with a vehicle fire. The definition of "open" is very restrictive in this case due to the nature of the fire hazard. To be defined as an "open" vehicle space; the space shall be permanently open to the weather on one or more sides and completely open from above meaning there shall be no overhead deck or overhangs. The intended goal is that intense heat, smoke, flame, and thermal radiation from a vehicle fire would be sufficiently dissipated due to the openness and air flow.

Under these strict limitations it is reasonable to conclude that the fire hazard from a vehicle fire would be minimized and thus the space can be classified as a type 13. This relaxation should permit open egress travel across such spaces without the need for protection methods other than those normally required for a type 13 space designation. Designs will be considered by the Marine Safety Center during plan review on a case-by-case basis.

Enclosed Vehicle Spaces:

These spaces are classified as a type 11 space if no passengers are permitted or a type 7 space if passengers may be in these spaces during ship operation. In many designs, the vehicle space is partially open on one or both ends or even on the sides. However, these spaces are still considered "enclosed" because the lack of complete openness of the space affects heat and smoke dissipation.

Vehicle deck designs incorporating large openings in the side shell of the vessel or at the ends may create a fire hazard to locations above or beside the openings from heat, smoke, and flames. Refuge areas, egress locations, lifesaving equipment, and windows in accommodation spaces should not be located directly above such openings unless due consideration is given to mitigation of the hazard.

For enclosed vehicle spaces; areas of egress or refuge and embarkation areas must be structurally isolated from the vehicle space. This can be accomplished by structurally separating vehicle spaces from refuge areas and lifesaving equipment and providing A-class enclosures around stairways and egress paths. To meet the requirement of 46 CFR 72.20(f), stairtowers shall not have unprotected direct access to vehicle spaces, unless through engineering analysis, a different arrangement is shown to be equivalent.

6.9 Vessels incorporating type 5A spaces
Ref: 46 CFR 72.05-55
Test ASTM E-119

This policy provides the minimum structural insulation and bulkhead classifications for certain vessels containing low risk passenger accommodations spaces with not more than 5 kg/m^2 fire load. This policy supplements the applicable regulations. In some situations, other policy may require sprinklers that would seem unnecessary when applying the "5A" guidelines. Since the 5A policy specifically relates fire load to structural insulation requirements without consideration for active systems or other

passive arrangements, such situations should be resolved on a case-by-case basis.

Applicability:

This policy is based on an engineering analysis which includes assumptions regarding the compartment geometry, ventilation factor, fire load, material flammability, etc. If these assumptions are not followed then the analysis is not necessarily applicable. For this reason, the use of 5A spaces is limited to certain passenger vessels which:

- Carry not more than 600 passengers with no overnight accommodations for passengers or crew;

- Comprised predominantly of large, open public spaces which generally encompass the entire length and breadth of the enclosed area; and

- Constructed of steel or aluminum.

Background:

The fire risk and potential severity is reduced by limiting the quantity of combustibles and also by closely monitoring the type of combustibles. The low fire load alternative is designated as type 5A. A type 5A space includes those accommodation spaces with a fire load of 5 kg/m^2 or less with noncombustible (or approved) veneers and trims and fire resistant furnishings including foams and fabrics.

In type 5A spaces, the fire is not expected to be severe enough to significantly attack the barriers or degrade the strength of uninsulated aluminum. Consequently, combustibles located behind typical ceiling panels and bulkhead linings and lifejackets in closed, nonperforated, noncombustible containers are not expected to contribute to the fire.

The distribution of the fire load is critical in type 5A spaces. The fire load must be uniformly distributed throughout a type 5A space to prevent the fire hazard from being disproportionately severe at specific barrier locations. This helps to ensure slow fire growth and minimum peak heat release rate, preventing localized flashover. Examples of distributed fire load include the row seating arrangement in a passenger ferry, the table and seating arrangement in a dining room, or the bench style seating in an excursion vessel with or without tables. Stacking tables and chairs in the corner when not in use is prohibited.

When the type 5A policy is applied appropriately to these sparsely furnished compartments as intended, the fire load

distribution requirement is usually not a problem. It is when the policy is inappropriately applied to spaces such as casino areas or lavishly furnished bar areas with open dance floors that the distribution requirement becomes excessively onerous and thus the spaces are often disqualified from this designation.

Specific Requirements:

- The fire load shall not exceed 5 kg/m^2.

- Only "noncombustible veneers and trim" are permitted. This includes the use of materials approved under 46 CFR 164.012.

- Furniture and furnishings shall comply with 46 CFR 72.05-55(a), (b), and (c) except that only approved finishes may be used on exposed horizontal surfaces.

- Furniture meeting UL 1056 is acceptable in lieu of the above requirements.

- Fire load calculations are required in accordance with chapter 7 of this circular.

- The following two items may be omitted from the fire load calculations in type 5A spaces only; 1) life jackets stored in closed, nonperforated, noncombustible containers, 2) electrical cable insulation located behind noncombustible ceiling panels or bulkhead linings.

- Fuel tank boundaries may be uninsulated aluminum or steel construction provided: 1) the fuel tank boundaries are not adjacent to a potential source of ignition, or 2) the fuel tank boundaries are not adjacent to a space containing more than 2.5 kg/m^2. Sight glasses, when permitted by Subchapter F, should be construction in a manner to preserve the fire integrity of the bulkhead and shall comply with 58.50-10(a)(6).

- Voids and other spaces where the fire load does not exceed 2.5 kg/m^2 and constructed of steel or aluminum do not require insulation.

- Where a qualified refuge area (QRA) is located adjacent to type 5A spaces, C-class smoke tight structural boundaries constructed primarily of aluminum or steel are permitted. This does not permit unlimited amounts of glass which could be a thermal radiation hazard.

- Stanchions which support decks that are required to be A-class must be steel or equivalent. C-class stanchions are allowed in water tanks, ballast tanks, void spaces, and other spaces with not more than 2.5 kg/m^2 fire load and type 5A spaces.

- The shell plating and framing below the main deck shall be at least A-0 class standard for a distance of at least 300 mm below the lightest load waterline.

- Stairs and ladders located entirely within a type 5A space or stairs located entirely within a stairtower enclosure may be constructed of uninsulated aluminum or steel.

- Windows in bulkheads of type 5A spaces facing lifeboat/liferaft embarkation and lowering areas, weather deck refuge areas, and weather deck egress routes shall, at a minimum, be fitted in aluminum or steel window framing systems designed to hold the glass in place in the event of a fire. Exterior windows in type 5A spaces not facing the above areas may be fitted in rubber or similar retaining gaskets. All other windows shall meet the applicable regulatory requirements.

- Passenger vessels less than 100 GT shall, at a minimum, meet the fire pump and fire main requirements applicable to vessels that are more than 65 feet in length.

TYPE 5A SPACE ADJACENT TO: (PER72.05-10)**	MINIMUM CLASSIFICATION
1 ***	C-CLASS SMOKE TIGHT
2 ***	C-CLASS SMOKE TIGHT
3 ***	C-CLASS SMOKE TIGHT
4 ***	C-CLASS SMOKE TIGHT
5	B-0 BULKHEADS/A-0 DECKS
5A ***	C-CLASS SMOKE TIGHT
6 *	B-15 BULKHEADS/A-0 DECKS
7	TYPE 7 SPACES NOT PERMITTED
8	C-CLASS
9	A-15
10	A-15
11	TYPE 11 SPACES NOT PERMITTED
12	A-0
13 ***	C-CLASS SMOKE TIGHT

* TYPE 6 PUBLIC SPACES ARE NOT PERMITTED

** WHERE STRUCTURAL INSULATION IS REQUIRED, IT IS REQUIRED ON THE HIGH FIRE LOAD SIDE OF THE BOUNDARY ONLY

*** C-CLASS SMOKE TIGHT BOUNDARY IS INTENDED TO BE A STRUCTURAL DIVISION CONSTRUCTED PRIMARILY OF ALUMINUM OR STEEL

TYPE 5A BOUNDARY REQUIREMENTS

TABLE 6.2

- Each accommodation space must be fitted with; 1) a smoke actuated fire detection system of a type approved by the

Commandant which is installed in accordance with 46 CFR 76.27, and 2) a manual alarm system which meets the requirements in 46 CFR 76.35. However, public spaces which may be assumed to be occupied by a large number of persons when passengers are on board need only be served by the manual alarm system as described above. The alarm boxes of the manual alarm system must be located in the vicinity of each door leading from the space.

- Each service space which poses a risk of fire must be fitted with an approved fire detection system.

- Table 6.2 gives the requirements for the non-MVZ boundaries for vessels incorporating 5A spaces. Boundaries that are MVZ's shall be constructed and insulated in accordance with the applicable regulations under which the vessel is constructed.

- Where aluminum is used in the construction of the boundaries, chapter 4 of this circular should be followed. Specifically, decks need not be covered on the top surface inside a type 5A space and the 5A space should apply the alternative approach assuming the "5A side" has a negligible fire hazard.

6.10 Canopies and Open Decks
Ref: 46 CFR 72.05-5(1)

Open decks are required to have permanent openings. This means that such openings shall not be fitted with windows, screens, or plastic windows which permit enclosure. These spaces are not intended to be sheltered from the weather like enclosed spaces and they are not intended to be furnished or lined like interior spaces. It is for these reasons that these spaces are permitted reduced fire protection and it is assumed that these spaces are not such a fire hazard from furnishings that a fire originating in an open deck would threaten adjacent spaces or vise-versa.

Likewise, enclosed promenades are afforded the same reduction in SFP based on the assumption that such spaces are used for walking or strolling. These spaces are not intended to be used as, or furnished as, accommodation spaces.

Many vessels have open areas with canopies for outdoor use. Such spaces are classified based on the degree of openness. Normally, if any spot on the overhead is more than 5 meters from the nearest permanent opening to weather, the space is considered an enclosed compartment.

In general, if it can be assured that two means of escape are readily available, the use of combustible materials for the canopy may be acceptable. This relaxation is based on the assumption that these spaces pose a minimal fire risk to passengers because of; 1) minimal fire load, 2) open and

unobstructed egress, and 3) canopy material which is not readily ignited.

Although these three assumptions are not verified through regulatory requirements, the OCMI should ensure that the specific arrangement does not present an unreasonable safety hazard.

Any supporting structure for the canopy must be noncombustible construction regardless of the size of the area and coverage by the canopy. Canopies should not be load bearing i.e. life saving equipment should not be stored on top or supported by the canopy structure; otherwise, SFP requirements will be imposed.

6.11 Small Galleys
Ref: 46 CFR 72.05-5, 114.400, 177.410(c)(1)
Test ASTM E-119

Type 9 galley areas are required to be separated from other compartments including mess areas and dining areas. The purpose of segregation is to prevent the spread of fire beyond the area of origin. Combining galleys and dining areas defeats this purpose. This is especially true considering that the galley is a service space of greater fire risk while the dining areas are occupied by persons not specifically aware of the operations within the galley space.

Small galleys are considered less of a hazard and may be open to the dining area so as to consider the entire area as a public space. Small galleys are defined as areas containing low fire hazard food preparation equipment, generally with exposed heating surfaces not in excess of 121°c. This includes:

- microwave ovens
- heating lamps
- steamers
- popcorn makers
- small countertop browning ovens
- sterno food warming equipment

This does not include:

- deep fat fryers
- grills
- installed stoves or ovens
- any appliance with open flame used for cooking

Small galleys do not need to be separated from the remainder of the space. The space designation shall remain as an accommodation space for insulation and ventilation purposes.

If a small galley meets the above restrictions and is enclosed as its own space, then it would be designated a type 6 "diet kitchen" under 46 CFR 72.05. If the space has no food warming equipment and is just used for serving, then it would be designated a type 8 "isolated serving pantry".

6.12 Decorations
Ref: 46 CFR 72.05-15, 116.422
Test NFPA 701

Permanent decorations:

If the vessel has a specific theme which does not change with time and there are decorations associated with that theme which could reasonably be expected to be permanently displayed, then those items should be counted in the initial fire load calculations. One example could be a vessel in Hawaii with palm tree decorations and leis hung throughout the lounge area. Decorations installed during construction or outfitting will also be considered as permanent and included in the fire load as appropriate.

Permanent interior Decorations on passenger vessels must meet the requirements of 46 CFR 72.05-15(c) through (d) and the corresponding paragraphs in Subpart 116.422. This prohibits their use in corridors, stairs, or concealed spaces and restricts their use in type 5 and 5A spaces.

Temporary decorations:

Temporary decorations such as hanging banners, signs or Christmas trees should be kept to a minimum in quantity and duration. There are no explicit flammability restrictions on these items and they are not counted in the fire load calculations.

However, several high-fatality shoreside fires have occurred over the years including COCONUT GROVE NIGHTCLUB in which highly flammable decorations contributed to extremely rapid flame spread, trapping persons inside and creating significant quantities of smoke which eventually lead to their death.

For the purpose of shipboard safety, the OCMI always has authority to require a vessel to reduce the amount of temporary decorations or to use decorations constructed of less flammable materials. A reasonable amount of traditional combustible

decorations might involve a new years-eve party including a decorated tree, banners, personal items and table decorations. At no time shall such items interfere with safety equipment such as sprinklers, detectors, voice or visual alarms, exit signs, or portable extinguishers. Such decorations also shall not obstruct or reduce egress capability and shall not be located in corridors, stairs, or extended into concealed spaces.

Decorations with open flames are not permitted. However, candles may be placed on dinner tables if the candles are partially enclosed by low profile, stable, noncombustible bowls or covers so as not to be easily knocked over and to prevent inadvertent flame contact with combustibles during normal operations.

Exterior Decorations:(permanent or temporary)

Decorations on the exterior decks are not in any way restricted as long as such decorations do not interfere with egress or displace refuge area. However, due consideration should be given to fire safety in enclosed promenades or spaces covered by canopies.

6.13 Type 8 Spaces (Subchapter H)
Ref: 46 CFR 72.05-5, 72.05-10

Traditionally type 8 spaces are considered to be a low fire risk. This is because they are defined as bathrooms, small pantries with incombustible furnishings, small laundries with no facilities for drying, or small cleaning gear lockers with no room for stowage as outlined specifically in 46 CFR 72.05-5.

Because such spaces are afforded reduced structural insulation, Coast Guard policy for type 8 spaces is as follows;

1. Bulkhead and ceiling surfaces shall be approved (46 CFR 164.012).
2. Furniture and furnishings shall comply with 72.05-55.
3. Hanging fabrics shall be low flame spread (NFPA 701).
4. The fire load should be 15 kg/m^2 or less but fire load calculations are not required as long as the space is used as intended by the definition of 72.05-5.

An exception for practical purposes is that the "wet" surfaces of countertops and floorsin washrooms may use a combustible surface material without thickness limitation. This exception is to permit modern water resistant surfaces. Combustible shower enclosures may be permitted in accordance with section 6.16 of this circular.

If a designer wishes to construct these spaces with a greater fire risk (i.e. higher fire load or non-fire-resistant furnishings) then the space shall be reclassified as appropriate (i.e. type 6 or 7) for the purpose of structural fire protection.

Private sanitary facilities shall be considered a portion of the space in which they are located. Small cleaning gear lockers (type 8) should not have a floor area greater than 5 square meters to meet the intent of a type 8 space and to discourage storage. See section 6.18 for a more specific definition of cleaning gear lockers.

6.14 Control Stations
Ref: 46 CFR 72.05-5(a)(1), 114.400
Test ASTM E-119

A control station includes either of the following;

1. <u>A space containing the emergency source of power, excluding generators:</u> The emergency source of power includes emergency switchboards and battery power supplies for lighting, ship control, transition power, or starting the emergency generator. Switching gear such as automatic bus transfer units are not considered emergency power supplies for the purpose of this definition. When a ship service or emergency generator (combustion engine) is also in one of these spaces, the space shall be classified as a machinery space.

2. <u>A space in which a continuous watch is maintained and in which navigation, radio, or fire control equipment is located:</u> Usually the radio and navigation equipment is located on the bridge which is always manned, however, when fire control equipment or ship control equipment is centralized then these spaces are considered control stations even when not continuously manned. Fire control equipment includes; actuators, alarms, and detector panels for smoke detectors, sprinklers, or fire doors. Transformer rooms and electronics rooms which are not associated with emergency power or ships control are considered service spaces and not control stations

Enclosed booths in engine rooms are not considered control spaces as long as such stations are contained entirely within the engine room compartment boundaries. In this case the enclosed booth is considered part of the engine room.

The above definition of a control station is not intended to include public spaces and service spaces which happen to have

located within them certain remote controls such as electrical breakers, remote door closing devices or remote actuators. Local control mechanisms for doors, dampers, or extinguishing systems are often located throughout a vessel for practical purposes.

When the requirement for the location of fire control equipment in a control station is satisfied by a specific arrangement, then any additional controls located in other locations do not specifically force that other location to be designated a control space.

Furthermore, the above definition is not intended to include compartments containing machinery such as diesel generators or steering gear. These systems, by themselves, are considered type 10 machinery spaces.

A CENTRAL CONTROL STATION is a control station in which the following control and indicator functions are centralized:

- fixed fire detection and alarm systems
- automatic sprinklers fire detection and alarm systems
- fire door indicator panels
- fire door closure controls
- watertight door indicator panels
- watertight door opening/closing controls
- ventilation fan controllers
- general/fire alarm
- communication systems including telephones
- microphone to public address system

Although fire resistant furniture and furnishings and interior finishes are not specifically required, the outfitting of control stations should have due regard for the possibility of ignition and the subsequent loss from fire. In practice, fire load is not a problem and fire load calculations are not required.

6.15 Void Spaces
Ref: 46 CFR 72.05-5
Test ASTM E-119

These spaces are traditionally considered to be very low fire risk and thus classified as type 12 spaces with A-0 barriers according to table 72.05-10 and 116.415. In some cases, these barriers may even be reduced to C-class construction using uninsulated aluminum. This barrier classification represents the likelihood that a fire in a void would not burn for long because there are essentially no combustibles.

However, modern designs use void spaces for various purposes including; ventilation ducting, pipe and wire runs, etc. Storage

of combustibles in a void space is strictly prohibited and will result in the space being reclassified as type 11. Substantial amounts of machinery in a void space will result in the space being reclassified as type 10.

The following restrictions apply in order to consider these spaces as type 12 void spaces:

1. No storage of combustibles is permitted.

2. Surface finish materials (other than paints) should not be used in void spaces.

3. Fire load associated with plastic pipe, cable, etc., shall not exceed 2.5 kg/m^2 however, fire load calculations are not required because piping and lagging normally do not amount to much.

4. Machinery is limited to that prescribed in 46 CFR 72.05-5(d)(2) which specifically prohibits internal combustion machinery or other oil burning, heating, or pumping units, and fuel oil filling stations.

6.16 Modular Construction
Ref: none
Test ASTM E-119

Modular construction in accommodation and service spaces may be permitted if the construction is proven to meet the intended performance of the existing structural fire protection requirements including noncombustibility. This is usually proven through testing.

Noncombustible Components:

Approved bulkhead panels and joiner construction may be used to construct modules if the approval includes penetrations and fixtures, bulkhead to door, bulkhead to bulkhead, and bulkhead to overhead details. Otherwise, these modules shall be tested for performance by either;

- Testing the entire module including penetrations and fittings by using the module as the actual furnace boundaries on all sides, or

- Testing a bulkhead assembly and testing an overhead deck assembly including penetrations and fittings. The overhead assembly shall include, on all four sides, the joints and the bulkheads extended down from the overhead deck a distance of .5 meters in accordance with figure 6.1.

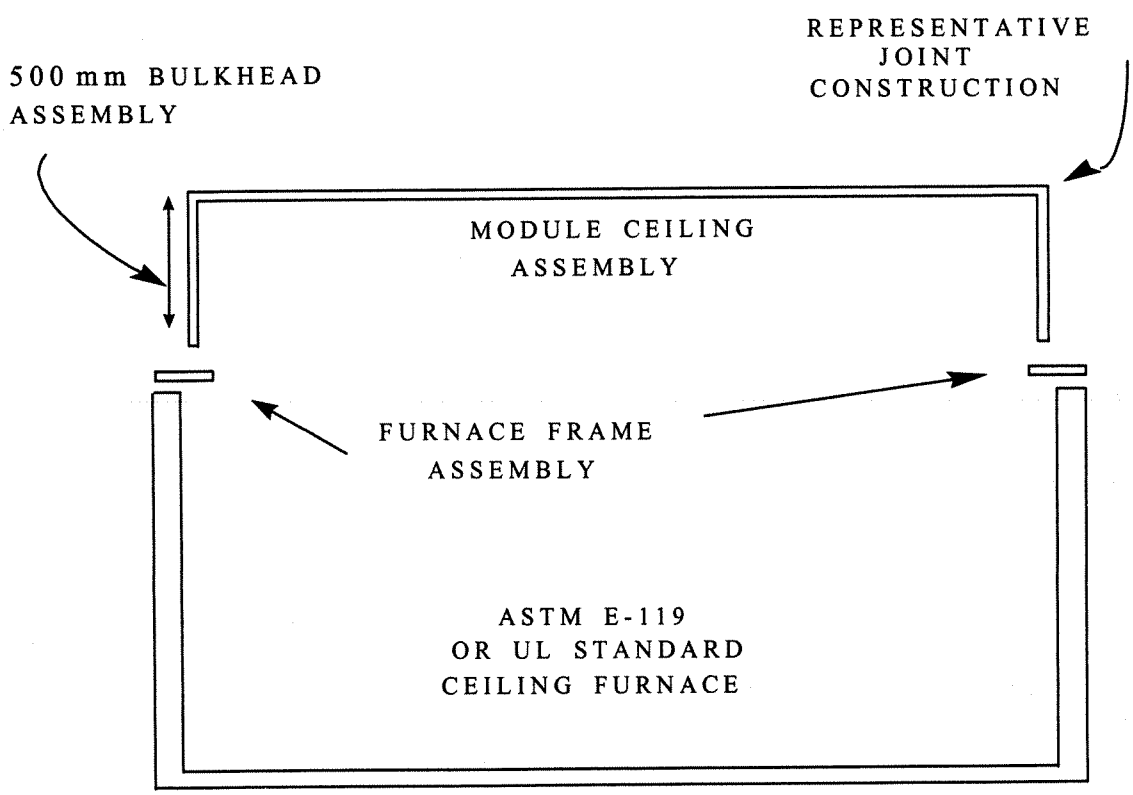

MODULAR CONSTRUCTION (NONCOMBUSTIBLE)

FIGURE 6.1

When these modules substitute for the required barriers they create interstitial spaces between adjacent modules or structural members within the vessel. Such interstitial spaces are considered concealed spaces and shall meet the requirements of 46 CFR including draft stops which may need to be extended down to deck level between adjacent modules.

When two modules are adjacent to each other, each module shall be constructed with all sides present and fitted identical to the tested construction. No sides may be "in common" with adjacent modules unless specifically tested in that configuration, or the construction should be symmetrical so as to ensure the fire resistance is identical on each side. All structural divisions adjacent to, but not part of a module, shall be constructed and insulated to the required standard without credit for the module unless the performance of that composite arrangement is proven otherwise. See figure 6.1 and 6.2 for details of modular construction, testing and arrangement.

Combustible Components:

Modules made from combustible materials such as FRP may be used in accommodation spaces for bathrooms only. Most combustible modules do not meet the furniture and furnishing requirements for type 5 spaces so that the staterooms must be re-classified as type 6. However, FRP modules with low flame spread surfaces (ASTM E-84 20/10 or MIL-Spec resins) and noncumbustible framing could qualify as fire resistant furnishings. In any case, the combustible components shall be included in the fire load.

Additional restrictions for combustible construction are as follows:

- The module may not be given credit as part of the division and thus shall be completely surrounded by divisions of noncombustible construction and properly insulated to the required classification.

- Interstitial spaces and penetrations of the structural divisions shall be constructed in a manner that does not degrade the SFP requirements.

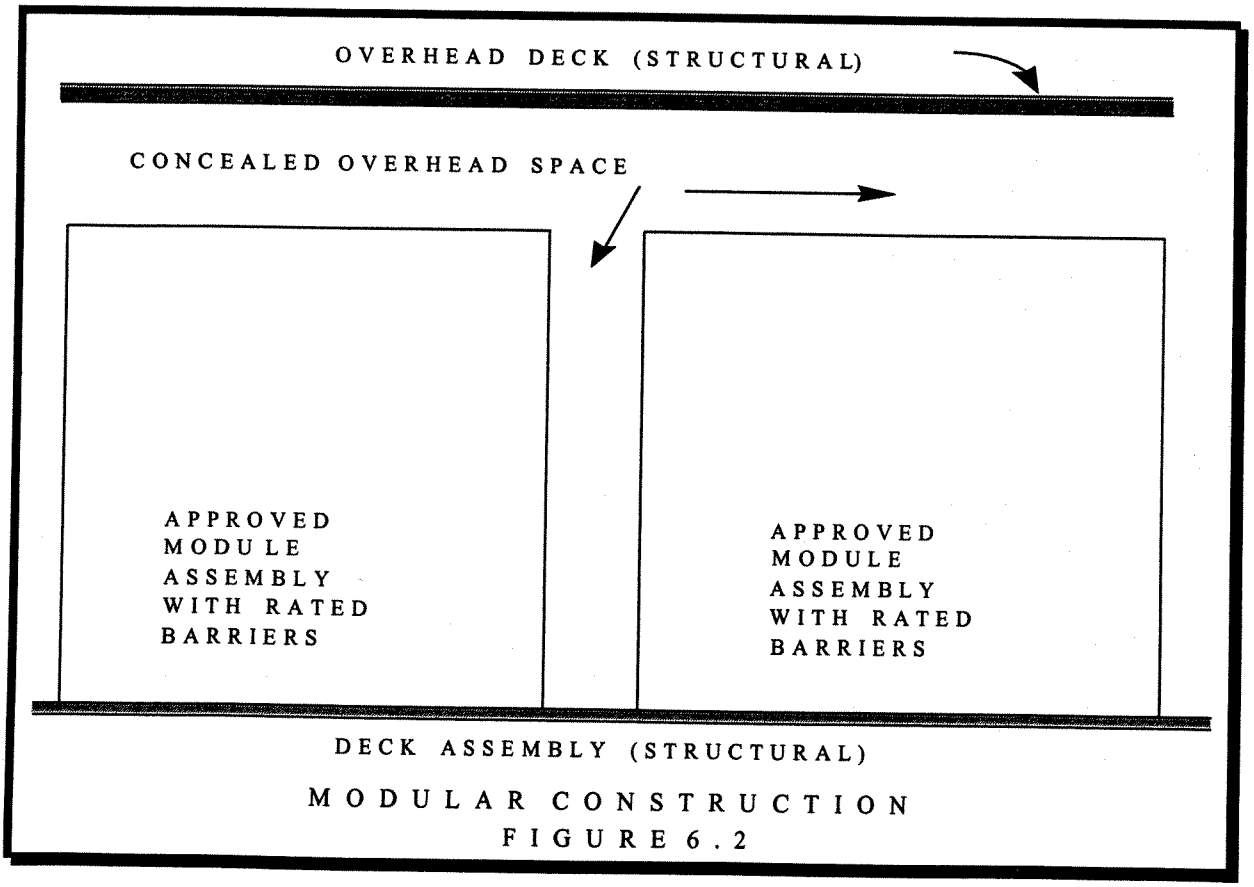

MODULAR CONSTRUCTION
FIGURE 6.2

6.17 Glass Enclosures
Ref: None
Test ASTM E-119

Glass enclosures may be permitted on the uppermost deck of passenger vessels with the following restrictions:

- All construction shall be noncombustible. The framing shall be steel or equivalent material and the glass shall be laminated glass, wire inserted, or fire rated safety glass or otherwise protected.

- The glass enclosed space shall meet the requirements of a type 5 accommodation space, fully sprinklered with sprinklers designed to reduce the fire hazard to the glass structure. Other arrangements having an equivalent level of safety may be permitted on a case-by-case basis by the Marine Safety Center.

- Compartments located adjacent to glass enclosures shall be separated by appropriately constructed barriers.

- Adjacent exterior walkways shall not be primary exit paths but may be secondary egress paths or open decks accessible to the public.

- Refuge or safety areas shall not be located adjacent to glass surfaces unless performance is proven including radiation hazards (see section 3.11).

- No spaces are located above the level of the glass enclosure with the exception of stack spaces, wheel houses, or open decks not normally occupied and not used for refuge or evacuation.

The above restrictions ensure that glass enclosures are located in areas where if a fire were to occur, failure of the glass structure would have little to no impact on the fire safety of the vessel.

If the glass enclosure is flush with the side of the vessel and located directly above refuge or embarkation areas then additional measures may be required to ensure the integrity of the glass structure to meet A-0 construction.

Glass enclosures will be approved on a case-by-case basis by the Marine Safety Center and will probably require an engineering analysis by the designer to show compliance with the above general guidelines and ensure an equivalent level of safety to conventional steel construction.

6.18 Fan Rooms and Cleaning Gear Lockers
Ref: 72.05-5(d)(2)
Test ASTM E-119

Fan rooms are specifically defined as type 12 spaces (without stowage) in accordance with 46 CFR 72.05-5(d)(2). This classification requires A-class construction for the barriers. However, there are two exceptions to this requirement as detailed below.

Dedicated fan rooms:

Fan rooms that are contained entirely within a compartment and serve only as the ventilation for that compartment may be constructed of B-0 boundaries. The boundaries of that fan room which also serve as exterior weather boundaries of that compartment may also use B-0 construction thus allowing for vent grilles and openings from weather for intake and exhaust purposes. When the boundaries of the fan room are adjacent to other interior compartments then the boundaries must be of the appropriate construction.

It should be noted however, when exhaust from such fan rooms are adjacent to exterior refuge or safety areas, closures should be fitted and operable from the exterior to prevent smoke movement into these areas.

Fan rooms in accommodation spaces:

Small fan rooms are often located in berthing areas. In this case, fan rooms are permitted to have B-0 boundaries when the fan room has an aggregate power not exceeding 7.5 KW and the fan room is functionally integral (incidental) to the accommodation area, meaning that the ventilation from that fan room is used to supply or exhaust the staterooms in the immediate area.

The 7.5 KW limitation may be relaxed by the OCMI or the MSC if the fire risk is not increased. This guidance is not intended to apply to fan rooms that serve large portions of the vessel or areas outside the immediate area containing the staterooms.

Cleaning gear lockers:

Small cleaning gear lockers to be classified as type 8 spaces shall be less than 5 square meters in area and shall not contain provisions for storage other than daily cleaning supplies. The OCMI shall ensure that the contents of the small locker do not present an unnecessary fire hazard and that the small locker is used (as intend) as incidental to the maintenance of the surrounding accommodation spaces. If there is storage in the small locker then the compartment shall be classified as type 6.

Cleaning gear lockers of greater than 5 square meters or containing storage of flammable liquids or having storage and usage not incidental to the accommodation area shall be classified as a type 6 or 9 space accordingly.

6.19 Machinery Spaces
Ref: 46 CFR 32.56-40, 72.05-40, 72.15
Test ASTM E-119

These spaces have fire hazards that result in additional concerns regarding the immediate and intense buildup of heat and toxic smoke from hydrocarbon fires; and the need for space isolation for total flooding suppression systems.

For manned machinery spaces, deck plating used for access to vital machinery as well as egress or firefighting operations, shall be constructed of steel or a material with equivalent structural properties when subjected to fire. Some combustible composite materials may be capable of meeting this criteria considering that deck grating surface flammability is not the primary concern in an already intense engineroom fire (a "self extinguishing" reaction to fire should be suitable). The primary concern is the ability to maintain load carrying capability during and after a fire. In some limited cases, for example, when engine rooms are very small, deck plates and grating may be constructed of aluminum after careful consideration is given to the consequences of the failure of these materials in (and after) fire.

Ventilation arrangements for machinery spaces on large passenger vessels are discussed in 46 CFR 72.15-10 and 72.15-15 with additional requirements in 76.15-35. Small passenger vessels shall meet the requirements in 46 CFR 116.610 or 119.465. Where people are required to be present for evacuation or refuge on weather decks, machinery space ventilation exhaust ducting should not exhaust directly below, above, or adjacent to these locations. If it does, a closure shall be fitted at the exterior location of the vent which is operable from the exterior.

Combustible insulation is permitted on machinery piping. These combustible materials should never be in contact with hot surfaces such as exhaust manifolds and all porous surfaces should be protected so as to prevent soaking from oil or fuel.

When insulation is required for rated bulkheads, including the hull of the vessel and other structural components within the machinery spaces, the insulation shall be approved noncombustible structural insulation.

It is recommended that all insulation within machinery spaces (on all vessels) be covered by a noncombustible vapor barrier to protect insulation where flammable and combustible liquids or vapors are present because of the potential for oil soaking (as specifically required for Subchapter D vessels in 32.56-40). In any event, oil soaked insulation on the bulkheads or hull shall be replaced immediately.

Combustible material shall not be used for the construction of machinery foundations, framing, or supports. Small amounts of combustibles may be used in foundations and bracing for reducing vibrations but such materials shall be kept to the minimum needed to accomplish their intended function. The failure of such materials in a fire should not result in the collapse of machinery or its foundation.

Combustible materials, such as wood or resins, may be used in the construction of electrical insulators for electrical components, electrical equipment, foundations or enclosures of electrical or electronic equipment only if such material is low flame spread in accordance with IEC, IEEE 45, or UL 50. When combustible materials are used, they shall be kept to the minimum necessary to perform their function as insulators and shall conform to the applicable standards of IEC and IEEE 45. Wood handrails and dielectric matting are also permissible in the vicinity of electrical components. Otherwise, combustible material is not permitted in the construction or outfitting of electrical equipment.

Although permitted in accordance with the Marine Safety Manual, Vol II, paragraph 5.C.6, fiberglass cable trays represent an unnecessary addition of combustible material and their use is discouraged in any machinery space.

Combustibles shall not be stored in machinery spaces unless these materials are used daily. In this case, quantities shall be limited to several days supply and good housekeeping practices should be followed.

CHAPTER 7 FIRE LOAD CALCULATION PROCEDURES

7.1 Background

The progression of fire growth has essentially two stages: 1) preflashover and, 2) postflashover. Each stage represents a specific challenge to the active and passive fire protection mechanisms. In preflashover stage, the fire has only a local effect on the compartment and the fire grows by heating nearby objects to the point of ignition. This is when fire resistant materials are most effective.

In postflashover, the heat intensity is so great that most combustible objects ignite and the effects are intensified throughout the compartment. The amount of combustibles within the compartment (fire load) directly affects this post flashover fire severity. It is in the post flashover stage that the thermal attack on the barriers is severe and the duration of resistance and integrity of the barriers is measured as simulated by ASTM E-119 using the standard fire test. It is primarily from this reason that the barrier insulation requirements in 46 CFR are related to the fire load within the space.

Fire load limits should not be confused with the closely related but separate restrictions on the types of materials permitted within accommodation spaces which is based on the preflashover fire hazard. This chapter does not specifically address the restrictions on materials used in accommodation spaces. Reference, to material properties can be found in 46 CFR 72.05-55 and chapter 2 of this circular.

7.2 Fire load Definition (see 46 CFR 116.427)

The fire load of a space is defined as the total amount of combustible material(mass) in the space divided by the gross deck area of the space. It is expressed in terms of kilograms per square meter (kg/m^2).

There are several policies which rely on fire load restrictions to allow reductions in the requirements for other active and passive measures. For example, NVIC 8-93 relaxes the restrictions on MVZ length for certain vessels provided that, among other things, the fire load is limited to 15 kg/m^2. Section 6.7 of this circular drastically reduces the structural insulation requirements for very low fire load spaces. While policies such as these can allow more flexibility in the design and construction of passenger vessels, they also increase the importance of accurately documenting and monitoring the fire load

throughout the life of the vessel. In these cases, fire load restrictions should be strictly applied to ensure an adequate level of safety is maintained.

When Fire Load Calculations are required:

Fire load calculations are necessary for all spaces with a limit of 15 kg/m^2 or less. Calculations may be necessary for other spaces such as type 7 spaces at the discretion of the OCMI if it appears that the limit may be exceeded. A separate calculation should be carried out for each space. It is not appropriate to group spaces of a similar type and calculate a single fire load.

Designers and builders should prepare fire load calculations, using the definitions and requirements in this circular, for submission to the MSC. Minor changes to the initial fire load calculations may be reviewed by the OCMI, once a baseline has been established. Figure 7.1 is the suggested format for fire load calculations. Submitters are strongly encouraged to use this format for submission and as documentation to monitor fire load throughout the life of the vessel, and to aid in planning future modifications. It is further recommended that the fire load calculations be kept aboard the vessel and be available for periodic verification at subsequent inspections.

What to include:

Fire load calculations include all materials that are combustible. The only items which do not have to be considered part of the fire load are those which meet the requirements of 46 CFR 164.009. Combustible items can generally be divided into three groups; 1) construction and outfitting, 2) operational items, and 3) personal items. Construction, outfitting, and operational items are always counted in the fire load while personal items are omitted because they are implicitly counted when the limits where established.

Combustible materials of construction and outfitting are typically aboard when the vessel is delivered. Operational combustibles include items which may not be onboard at the time of delivery, but are brought aboard as part of the normal operation of the vessel.

In all, this includes but is not limited to: furniture, furnishings, carpet, rugs, combustible deck coverings, draperies, combustible interior finish, computer and office equipment, slot machines, electrical cable insulation, plastic piping, light diffusers, mattresses, bedding, combustible shower modules, daily cleaning/dining supplies, lifesaving equipment, and similar materials. Approved interior finish materials and fire resistant furnishings, despite their low flame spread rating, are still combustible and must be included in the fire load calculation.

One exception is that solid wood doors opening to exterior spaces only, as permitted in CFR, need not be included in the fire load calculation because they are considered part of the vessel structure. Furthermore, deck coverings approved under 46 CFR 164.006 need not be included in the fire load calculations because they are considered as meeting the noncombustibility requirements as detailed in section 2.1 and 2.8 of this circular.

SPACE DESCRIPTION: FIRE LOAD LIMIT:
46 CFR Sub K/H SPACE TYPE DESIGNATION: GROSS DECK AREA:

Item	Quantity	Unit Weight (kg)	Unit Combustible Weight (kg)	Total Combustible Weight (kg)	Manufacturer Specification Attached?(Y/N)
Combustible Construction					
Floor Covering					
Carpet					
Carpet Pad					
Bulkhead Veneer					
Ceiling Veneer					
Trim and Molding					
Electrical Wiring					
Fixed Seating (type A)					
Fixed Seating (type B)					
Other Items: May include gaming equipment, dining tables, office equipment, security equipment, etc.					
Operational Combustibles					
Bar Supplies					
Linens					
Office Supplies					
Life Jackets					
Cash					
Other Items					

TOTAL:

FIRELOAD (kg/sq m):

FIRE LOAD CALCULATION SHEET

FIGURE 7.1

All combustible material must be counted on an equal basis without regard for calorific value or fire resistance. For example, one kilogram of "fire resistant" carpet is equal to one kilogram of any other combustible material for the purpose of the fire load calculation. An exception will be made so as not to penalize for the use of fire retardants, when it can be shown that a treated material has more mass than an untreated material of the same type and grade due to the treatment for increased fire resistance.

In this case, the mass, on a per square meter or similar basis, of the treated material will be considered the same as that of the untreated material. In general, this procedure is inappropriate because the fire retardant material does not weigh noticeably more than the same material without the fire retardant. In fact, this policy is often misused because the material with the fire retardant is not the same as the material without the fire retardant.

For items which are constructed of both combustible and noncombustible material, such as some furniture, gaming tables, and slot machines, only the mass of the combustible material needs to be included in the fire load calculation. In this case, however, the Coast Guard will require written certification of the combustible mass from the builder of the vessel or the manufacturer of the item indicating the total mass of the item and the combustible mass of the item.

Only noncombustible materials which can be mechanically separated may be omitted such as the components of a table or a chair frame from a cushion. It is incorrect to subtract out the noncombustible mass of mixtures which are physically or chemically mixed such as certain deck leveling materials or glass fiber from resin binders in composite matrices.

Combustible materials in concealed spaces are generally prohibited with the exception of cable insulation and limited amounts of plastic piping. Combustibles in concealed spaces must be included in the fire load calculation keeping in mind that this discussion in no way infers or allows the installation or storage of additional combustibles in concealed spaces.

The only time when combustibles in concealed spaces do not need to be included in the calculation is when:

- they are located behind A-class linings (any fire load)

- they are located behind B-class linings and the space has a fire load limit of 15 kg/m^2 or lower, or

- they are located behind C-class linings and the space has a fire load limit of 5 kg/m^2. This exception includes lifejackets stored in closed, noncombustible containers. The

specific lifejacket exception will not be extended to other combustibles in noncombustible containers such as books within a steel cabinet.

The reasoning for the above exemptions is that in each of the above three situations the fire scenario is such that the combustibles are not expected to contribute to the potential for flashover.

The fire load calculation shall include operational combustibles and is expected to be representative of actual operating conditions. This means that items such as trash, office products, and plastic gambling chips or money shall be included in the calculation. It is the responsibility of the designer and builder to ensure that the fire load calculations properly and realistically account for these combustibles considering the expected operations of the vessel and that they are sufficiently documented to the satisfaction of the Marine Safety Center and are accepted by the Officer in Charge, Marine Inspection. In any case, the actual fire load onboard the vessel in operation should not exceed the limits defined by the space type.

Alcohol may be stored in accommodation spaces only in quantities intended for immediate or daily use such as would typically be found on shelves behind a bar. Storage of alcohol in greater quantities requires a dedicated storage room which will not be considered as part of the same space for structural fire protection purposes. Alcohol of greater than 80 proof shall be counted in the fire load.

The fire load of multilevel spaces, such as balconies, should be calculated on a deck-by-deck basis using the gross deck area on each level, but excluding the area of the deck opening. A three level atrium space, for example, will require three separate calculations. The area of the opening in the second and third levels cannot be counted in the gross deck area calculation for those levels respectively.

7.3 Fire load Limits

Spaces designated as type 1 do not have fire load limits because it is assumed that the specific functionality of these spaces precludes the use of significant amounts of furniture and furnishings. If this assumption is not valid then a limit should be imposed to ensure an equivalent level of safety as originally intended.

Spaces designated as type 2 and 3 have a limit of 5 kg/m^2. However, calculations are not required because it is assumed that few combustible furniture and furnishings are contained within

these spaces. If this assumption is not valid then the limit should be enforced to ensure an equivalent level of safety as originally intended.

Spaces designated as type 5 are limited to 15 kg/m^2. Spaces designated as type 5A are limited to 5 kg/m^2.

Spaces designated as type 6 and 7 have a fire load limit of 37.5 kg/m^2. Some limitations may be imposed for type 7 spaces of unusual geometry such as atria or long MVZ's. These spaces normally have a fire load limit of 15 kg/m^2 while maintaining the unrestricted construction option typical of type 7 spaces. The specifics of this policy can be found in the circulars that specifically address atria and long MVZ's.

Spaces designated as type 8 have a fire load limit of 5 kg/m^2 because it is assumed that few combustible furniture and furnishings are contained within these spaces. If this assumption is not valid then the limit should be enforced to ensure an equivalent level of safety as originally intended.

The above limits have anticipated an additional fire load due to personal items of passengers and crew of up to 12.5 kg/m^2. This most often applies in staterooms but may also be present in large accommodation spaces during colder weather. This personal allowance does not need to be accounted for in the fire load calculation, but the Officer in Charge, Marine Inspection may impose restrictions if the personal items appear excessive.

The designer should not attempt to increase the construction, outfitting and operational fire load limit by substituting the personal fire load allowance on the argument that passengers will not be bringing personal items onboard. The designer does not have enough control over this variable.

7.4 Submission of Calculations

In general, type 5, 5A, and the type 7 (15 kg/m^2) spaces require fire load calculations to be submitted for review. Type 1, 2, 3, 6, 8, and the type 7 (37.5 kg/m^2) spaces do not require the submission of fire load calculations for review. However, fire load calculations for any of these spaces may be required at the discretion of the Officer in charge, Marine Inspection (OCMI), if it appears that the amount of combustibles may be excessive.

Review of these fire load calculations shall be completed by the Marine Safety Center during initial plan review to ensure completeness. Typically, these calculations will be stamped "Examined", and forwarded to the Officer in Charge, Marine Inspection for onboard verification and final approval.

CHAPTER 8 HUMAN ELEMENT CONCERNS

Structural fire protection is designed to be passive. This is intended to eliminate the need for human interaction and thus eliminate a possible failure mode associated with human error. However, the design, installation, and maintenance of SFP requires actions by many individuals.

Design:

The design of SFP systems should reduce the possibility of failure by minimizing the complexity of installation and the need for maintenance. Furthermore, the design should be such that SFP arrangements do not need to be moved, adjusted, or repaired during unrelated construction or maintenance. For those mechanisms that require human interaction for operation such as fire dampers or fire doors, the design should simplify operating procedures and be accommodating to those who must operate and maintain the system. A design should be robust and resistant to abuse from crew and passengers.

For example, fire stop design should be such that the installation of additional cables is easy and simple and does not destroy the fire stop construction. In many cases, a builder may install additional fire stops adjacent to the required fire stops for the purpose of accommodating additional cable installations in the future. Other shipyards ensure that cable penetrations during original construction are not filled more than a certain percentage so that extra room is available for future installations.

Installation:

The installation procedures for SFP should be as simple as possible to ensure that the system is not improperly installed due to lack of expertise or the need to save time and money. Instructions developed by the manufacturer should be available to the installer.

For example, some intumescent coatings have very specific application procedures with detailed requirements for surface preparation, humidity control and temperature limitations during application which could make proper application difficult and subsequent performance unreliable. Complexity should be avoided.

Maintenance:

During maintenance operations such as welding, grinding, or cutting, care should be taken to ensure that heat sources do not come in contact with combustibles. For example, combustible

polyurethane insulation in cold storage areas or cargo holds should be removed or covered prior to performing welding operations in or adjacent to these spaces. Concealed spaces are a particular concern because of the lack of detection or access and because such spaces tend to be adjacent to welding or cutting operations. When hotwork is conducted, consideration should be given to the procedures outlined in the OSHA guidelines in 29 CFR 1910.252, 1915.52, and NFPA 51(b).

Maintenance operations are the cause of many fires onboard vessels underway and inport. It is important that SFP systems are functional while maintenance operations exist. When fire doors are inoperable or structural insulation is removed, etc., it is prudent to increase crew alertness and augment ship safety with additional active systems such as fire hoses or portable extinguishers to ensure an adequate level of fire safety is maintained.

Maintenance schedules for fire doors, dampers, etc., should be maintained according to the applicable regulations or as recommended by the manufacturer. Maintenance of SFP systems should be accomplished at convenient times having due regard for the overall level of safety resulting from placing such systems out-of-service. Maintenance should be documented including the date, nature or extent of repair.

Operation:

It is important that fire dampers, door closures, and other structural fire protection systems are able to function automatically as designed because it is unlikely that the crew will have time to attend to such systems when fire is detected.

For example, fire doors are usually fitted with remote closure devices or self closing devices. The use of wedges or rope to hold doors open is a poor practice since it prevents the door from operating as designed. Doors should always be closed when not in use or unattended, especially during off-hours or at night when persons are sleeping and crew response time is reduced.

Good housekeeping practices are critical in the prevention of fires. The following practices are considered prudent:

- Keep ventilation systems clear of dust and debris
- Keep trash to a minimum and do not store trash in passageways or other areas not specifically designated for such purpose
- Minimize combustible packing materials associated with stores
- Minimize heat sources and ignition sources
- Secure portable tanks and heating equipment
- Close sight glass valves when not in use

CHAPTER 9 SFP REVIEW PROCEDURES

The following procedure outlines the basic review process for structural fire protection. This list can be used by designers as a general check list for submissions noting that although it is comprehensive it is not necessarily complete.

1. Determine the ship type and the applicable regulations:

- SOLAS; passenger, tanker, cargo, HSC
- CFR; Subchapter C, D, H, I, I-A, K, R, T, U

In some cases, such as T-S vessels when 46 CFR 72.05 does not apply, some or all of the follow steps may not be applicable.

2. Determine if the vessel will be constructed of steel, aluminum, or plastic (FRP). If constructed of steel, CFR is directly applicable. If constructed of aluminum apply chapter 4 and if constructed of combustibles apply chapter 5 of this circular for additional guidance to CFR.

3. Determine the compartment designation. Some of the SFP requirements that may vary depending on the space designation includes surface finishes, furniture, and interior furnishings along with structural insulation and barrier fittings and penetrations. Refer to tables 1.1, 2.1, 2.2, and 3.3 of this circular.

4. Review general arrangement plans to determine if bulkhead and deck classifications are correct.

5. Review bulkhead and deck insulation details to ensure the required integrity is met.

6. Check proposed installation method of approved insulation. Mechanical steel fasteners should generally be used and spacing should be as described in section 2.4 of this circular.

7. Check proposed installation method for bulkhead panels. Joiner work construction shall be in accordance with this circular and have a Coast Guard approval number.

8. Review the proposed materials of construction to determine if approved materials are provided. Refer to 46 CFR 164.005 through 164.012 and chapter 2 of this circular, or refer to the Coast Guard Equipment List.

Fire resistant furniture and furnishings do not have a type approval. Test data from accepted independent laboratories should be submitted to verify the materials ability to pass the tests specified in 46 CFR or this circular. Sales literature is not acceptable documentation.

9. Review general arrangement plan for use of noncombustible materials. The following are required to be noncombustible:

- bulkheads and decks
- doors, frames, and related hardware
- stairs
- ceilings and linings
- draft stops
- structural insulation
- duct and pipe lagging
- C-class joiner construction
- all materials to secure any of the above

10. Review details of doors and openings, fittings, cable penetrations, ventilation arrangements, and other systems that may affect barrier integrity with respect to fire and smoke spread.

11. Note and record design assumptions and operational restrictions used for variations from the regulations. These notes should be part of the permanent ship's files and passed on to the local OCMI for inspection/verification throughout the life of the vessel.