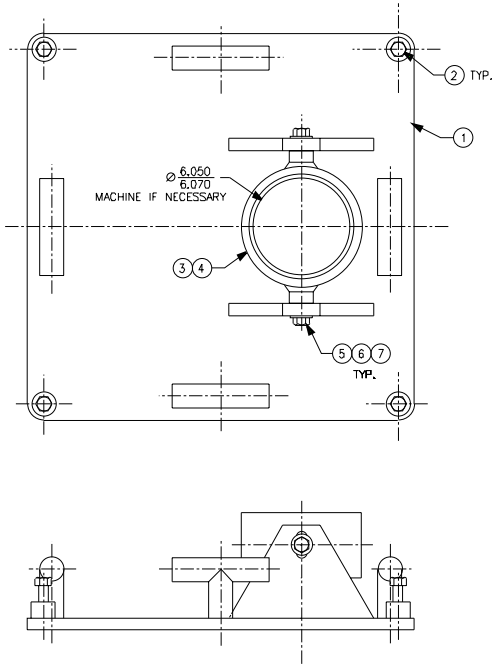

PC NO	DESCRIPTION	QTY	MATERIAL	DWG NO/SPEC	USCG DWG NO
1	BASE PLATE ASSEMBLY	1	ALUMINUM	3-28617	171 612
2	SETSCREW - SPECIAL	4	STNLS STL	2-28349	171 582
3	COLLAR	1	ALUMINUM	4-28424	171 573
4	BUSHING	1	REXNORD DURALON # 701-01096-128		
5	5/8 -11 UNC X 1 75 HEX HD C'SCW	2	STNLS STL	318	-
6	5/8 PLAIN WASHER	2	STNLS STL	COM'L	-
6	5/8 SPLIT LOCKWASHER	2	STNLS STL	COM'L	-

REV	DATE	APPR	DESCRIPTION	BY
A	12/28/92	-	6.050/6.070 WS 6.000/6.040	BAC

CONTRACT NUMBER D1CG23-91-C-EC1067

TOLERANCES UNLESS OTHERWISE SPECIFIED:
X ±12" .XXX ±.005"
XX ±.015" .XXXX ±.0005"
ANGLES .5°
RADII .03"
FINISH 125 RMS

DICHROMA, INCORPORATED
ALEXANDRIA, VIRGINIA
(703) 921-1440

CONSULTANTS

U. S. COAST GUARD
CIVIL ENGINEERING
WASHINGTON, DC

USCG. COMDT G-SEC-2
2100 2ND STREET SW
WASHINGTON, DC 20593-0001

ISSUE

MARK	DATE	DESCRIPTION
01	06/01/01	LV

A/E PROJECT NO: 236
CAD FILE NAME: 2171610001
DESIGNED BY: DAE
DRAWN BY: DAE
EDITED BY: LV
CHECKED BY: LWB

SCALE 1/4"=1'-0" PLOT SCALE:

SHEET TITLE

DAVIT
G-SEC-2C
WASHINGTON DC

BASE ASSEMBLY

REVIEWED BY: JM	REVIEWED BY:	REVIEWED BY:
PROJECT ENG.	BRANCH CHIEF	G-SEC-2
CHIEF, CIVIL ENG		DATE

PROJECT NUMBER	DRAWING NUMBER
98-	171 610
DISCIPLINE/SHT NO	SHEET 1 OF 1