REVISIONS				
ZONE	LTR	DESCRIPTION	DATE	APPROVED
	A	REMOVED OPTIONAL CONST., ADDED 2.20 MAX. DIM'N	2-28-92	

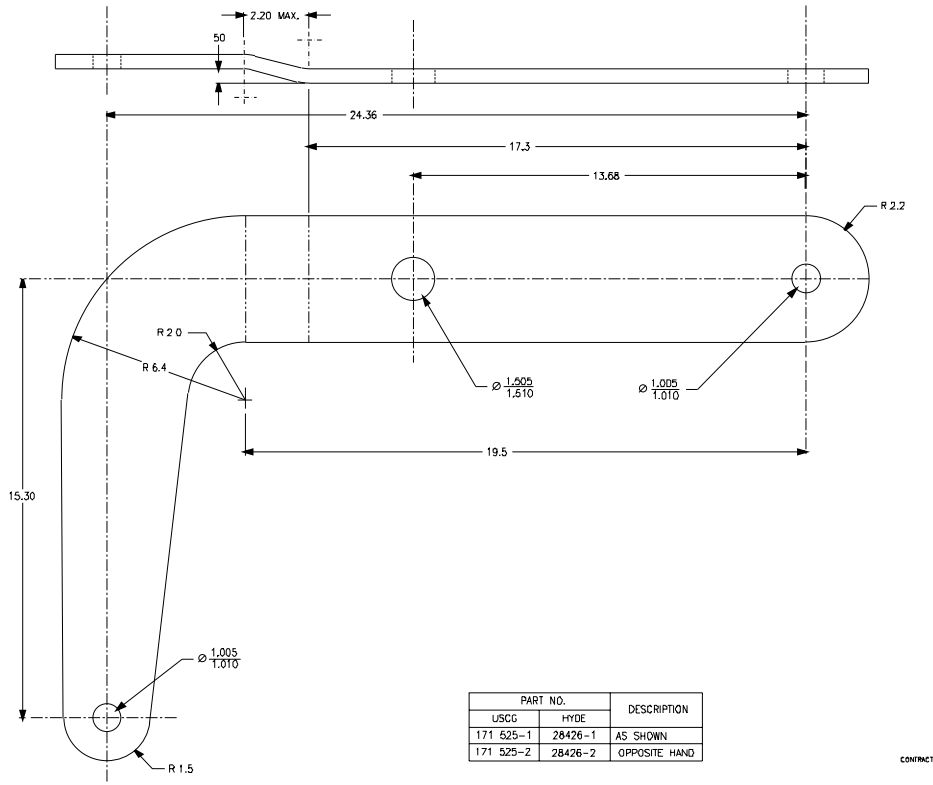

PART NO.		DESCRIPTION
USCG	HYDE	
171 525-1	28426-1	AS SHOWN
171 525-2	28426-2	OPPOSITE HAND

2 REMOVE ALL BURRS AND SHARP EDGES

1 MATERIAL - ALUMINUM PLATE - .50 THICK - 6061-T651

CONTRACT NUMBER DTCG23-91-C-EC1067

TOLERANCES UNLESS OTHERWISE SPECIFIED
.X ±12" XXX ±005"
.XX ±013" XXXX ±0003"
ANGLES 5°
RADII .03"
FINISH 125 RMS

DICHROMA, INCORPORATED
ALEXANDRIA, VIRGINIA
(703) 921-1440

CONSULTANTS

U. S. COAST GUARD
CIVIL ENGINEERING
WASHINGTON, DC

USCG. COMDT G-SEC-2
2100 2ND STREET SW
WASHINGTON, DC 20593-0001

ISSUE

MARK	DATE	DESCRIPTION
D1	06/01/01	LV

A/E PROJECT NO: 236
CAD FILE NAME: 2171575001
DESIGNED BY: DAE
DRAWN BY: DAE
EDITED BY: LV
CHECKED BY: LWB

SCALE: 1/2"=1'-0" PLOT SCALE

SHEET TITLE
CLAMP - DAVIT SUPPORT/OUTRIGGER
G-SEC-2C
WASHINGTON DC

ARM - OUTER

REVIEWED BY:	REVIEWED BY:	REVIEWED BY:
JM		
PROJECT ENG.	BRANCH CHIEF	G-SEC-2
CHIEF, CIVIL ENG		10/22/91 DATE

PROJECT NUMBER	DRAWING NUMBER
98-	171 575
DISCIPLINE/SHT NO	SHEET 1 OF 1