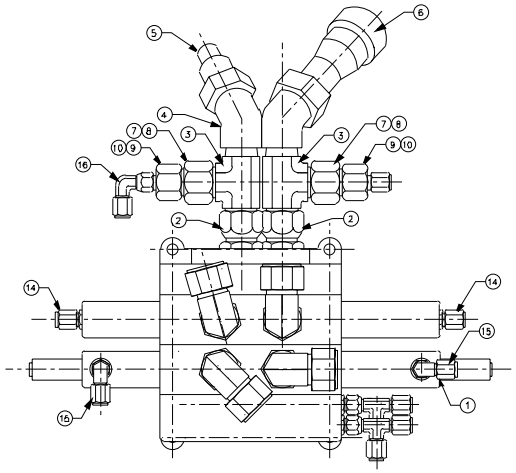

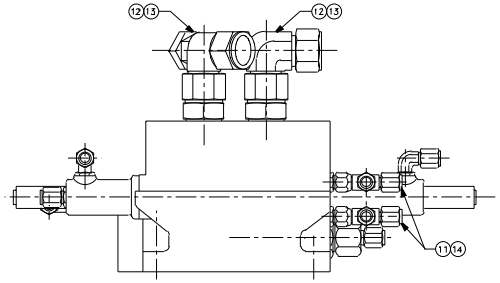

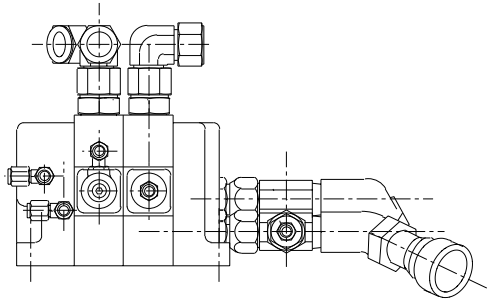

PC NO	DESCRIPTION	QTY	MATERIAL
1	DIRECTIONAL CONTROL VALVE	1	REXROTH P/N 2MP22-10/C/HB3HQQQA/ HB3(91)H(SL)QQQA/S
2	SWIVEL STR THD CONNECTOR	2	PARKER P/N 16 F6SOX-S
3	MALE RUN TEE	2	PARKER P/N 16 RTX-S
4	45° STREET ELBOW	2	PARKER P/N 1 CD45-S
5	MALE QUICK DISCONNECT CPLG	1	AEROQUIP P/N 5602-16-16S
6	FEMALE QUICK DISCONNECT CPLG	1	AEROQUIP P/N 5601-16-16S
7	TUBE END REDUCER	2	PARKER P/N 16-12 TRTX-S
8	NUT	2	PARKER P/N 16 BTX-S
9	TUBE END REDUCER	2	PARKER P/N 12-6 TRBTX-S
10	NUT	2	PARKER P/N 12 BTX-S
11	SWIVEL NUT RUN TEE	2	PARKER P/N 6 R6BX-S
12	STR THD CONNECTOR	4	PARKER P/N 16 F5U-S
13	SWIVEL NUT ELBOW	4	PARKER P/N 16 C6BU-S
14	STR THD CONNECTOR	4	PARKER P/N 6-4 F5BX-S
15	STR THD ELBOW	2	PARKER P/N 6-4 C5BX-S
16	SWIVEL NUT ELBOW	1	PARKER P/N 6 C6BX-S

REV	DATE	BY	DESCRIPTION	BY
A	10/25/00	"	LINES DWG NO. 171-553	DAE

CONTRACT NUMBER DTCG23-91-C-EC1067

TOLERANCES UNLESS OTHERWISE SPECIFIED:
.X ±10" .XXX ±005"
.XX ±015" .XXXX ±0005"
ANGLES 0°
RADII 03"
FINISH 125 RMS

DICHROMA, INCORPORATED
ALEXANDRIA, VIRGINIA
(703) 921-1440

CONSULTANTS

U. S. COAST GUARD
CIVIL ENGINEERING
WASHINGTON, DC

USCG COMDT G-SEC-2
2100 2ND STREET SW
WASHINGTON, DC 20593-0001

ISSUE

MARK	DATE	DESCRIPTION
01	08/01/01	LV

A/E PROJECT NO	236
CAD FILE NAME:	Z171553D01
DESIGNED BY:	DAE
DRAWN BY:	DAE
EDITED BY	LV
CHECKED BY	LWB
SCALE 1/2"=1'-0" PLOT SCALE	

SHEET TITLE

COTROL STAND
G-SEC-2C
WASHINGTON DC

CTRL VALVE SUBASSEMBLY

REVIEWED BY	REVIEWED BY:	REVIEWED BY:
JM		
PROJECT ENG.	BRANCH CHIEF	G-SEC-2

CHIEF, CIVIL ENG DATE

PROJECT NUMBER	DRAWING NUMBER
98-	171 553

DISCIPLINE/SHT NO

SHEET 1 OF 1