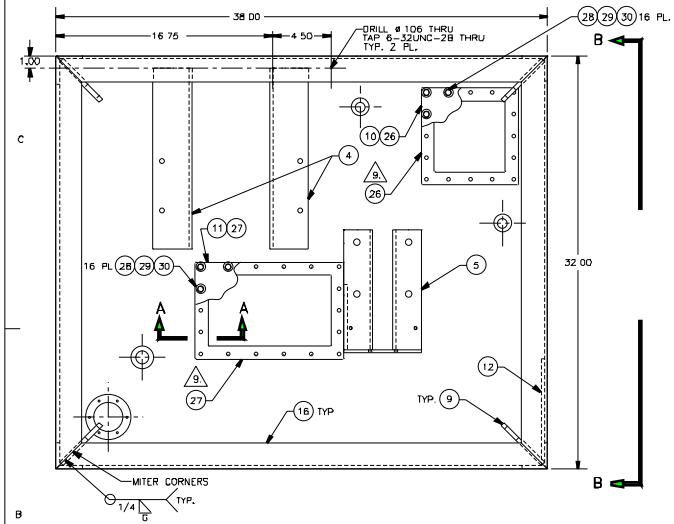

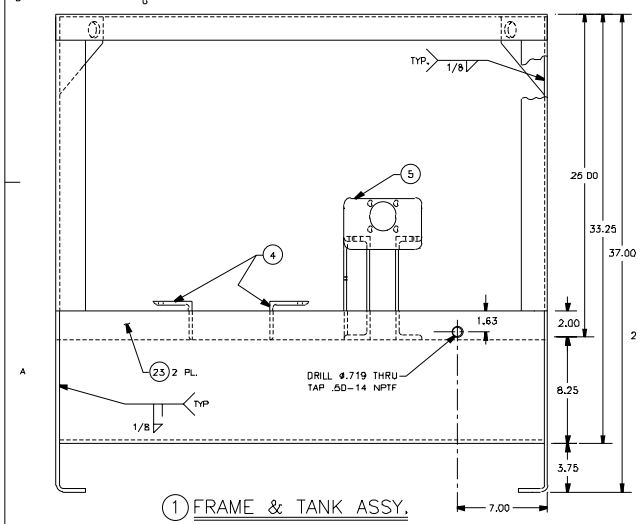

1 FRAME & TANK ASSY.

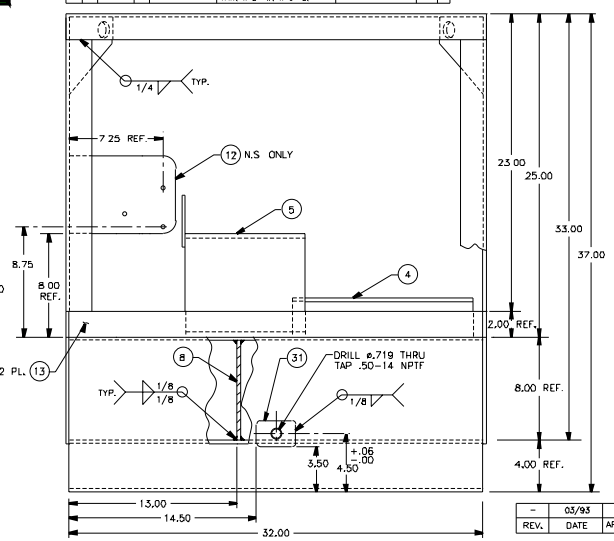

VIEW-B

PARTS LIST

QTY REQD	CAGE CODE	DWG	PART OR IDENTIFYING NO	NOMENCLATURE OR DESCRIPTION	MATERIAL SPECIFICATION	ZONE	ITEM NO.
			172341-1	FRAME & TANK ASSEMBLY			1
1			-2	HALF, TANK, TOP, PL, .25	ASTM A36		2
1			-3	HALF, TANK, BOTTOM, PL, .25	ASTM A36		3
2			-4	MOUNT ASSY., ENGINE, STRL. STEEL, L3x3x1/4x14.00 L	ASTM A36		4
1			-5	MOUNT ASSEMBLY, BLOWER			5
1			-6	MTG. PL., BLOWER, PL., 1/4"	ASTM A36		6
1			-7	MTG. PL., FLOW DIVIDER,PL., 1/4"	ASTM A36		7
1			-8	BAFFLE, PL., 1/4" NOM.	ASTM A36		8
4			-9	LIFTING EYE- PL. 3/8" NOM.	ASTM A36		9
1			-10	COVER, ACCESS, PL., 1/4" NOM.	ASTM A36		10
1			-11	COVER, ACCESS, PL., 1/4" NOM.	ASTM A36		11
1			-12	CONTROL MTG., PL. 1/4" NOM.	ASTM A36		12
2			-13	BARRIER 1/4"F B.x2" W.x32"L.	ASTM A36		13
A/R			-14	F.B. 1/2" NOM. THK x 1" W.	ASTM A36		14
2			-15	STRUCTURAL STEEL CB<11.5x8.75L	ASTM A36		15
A/R			-16	L2x2x1/4	ASTM A36		16
1			-17	CPLG. 3000 LB FS 1" NPT	ASTM A105, GR2		17
2			-18	HALF CPLG 3000 LB FS 3/4"NPT	ASTM A105, GR2		18
1			-19	FILLER NECK ASSEMBLY			19
1			-20	PIPE, 3" NOM SCH -40x4.50L.	ASTM A53 BLK SMLS		20
1			-21	FLANGE, PL 3/8"	ASTM A36		21
1			-22	GUARD, CPLG., PL., .12 NOM. THK. 2.75W.x12.00L. 5052-H32	QQ-A-250/8		22
2			-23	BARRIER, 1/4"F B.x2"W.x38"L.	ASTM A36		23
1			-24	GASKET, 1/8" NOM. THK. NEOPRENE, 55-65 DURO. 7.50 x 7.50	MIL-R-3065		24
1			-25	GASKET 1/8" NOM. THK. NEOPRENE, 55-65 DURO. 11.50 x 7.50	MIL-R-3065		25
1			-26	FRAME ASSY			26
1			-27	FRAME ASSY			27

PARTS LIST (CONT'D)

QTY REQD	CAGE CODE	DWG	PART OR IDENTIFYING NO	NOMENCLATURE OR DESCRIPTION	MATERIAL SPECIFICATION	ZONE	ITEM NO.
34			MS35307-308	CAPSCR., HEX HD. .250-20UNC-2A x 1.00 L.	300 SERIES CRES		28
34			MS35338-139	LOCKWASHER SPLIT HLCL. MED., .250 NOM.	300 SERIES CRES		29
34			MS15795-852	WASHER, FLAT, PLAIN, REG. .250 NOM	300 SERIES CRES		30
1			-31	DOUBLER F.B. .25 NOM THK. x 2" W. x 3" L.	ASTM A36		31

NOTES:

1. INTERPRET DRAWING PER MIL-STD-100E.
2. UNLESS OTHERWISE SPECIFIED:
   A. BREAK ALL SHARP EDGES: .005-.015R.
   B. FILLET RADII: .01-.02R.
   C. SURFACE FINISH 125
   D ALL FLAME OR SAW CUT SURFACES SHALL BE GROUND SMOOTH.
3. WELDING: SMAW PROCESS PER AWS D14.1 USING E7018 LOW-HYDROGEN ELECTRODES PER AWS A5.5. REMOVE ALL FLUX AND SPLATTER. ALL MACHINING OPERATIONS SHALL BE ACCOMPLISHED AFTER WELDING.
4. FINISH: PER THE PROVISIONS OF OSI-SPEC-1000A.
5. TANK INTERIOR SHALL BE FREE OF ALL DIRT, DUST, DEBRIS, SLAG, ETC., AND LIGHTLY OILED PRIOR TO DELIVERY.
6. TANK SHALL BE VISUALLY EXAMINED BY FILLING TO OPERATING LEVEL WITH WATER AT ROOM TEMP. ANY LEAKAGE SHALL BE CAUSE FOR REJECTION.
7. ALL TAPPED HOLES SHALL BE RE-TAPPED AFTER PAINTING.
8. MILL TEST CERTIFICATES REQUIRED ON ALL MATERIALS INCLUDING WELDING ELECTRODES.
9. △ MOUNT WITH MACHINED GASKET SURFACE EXPOSED.

UNLESS OTHERWISE SPECIFIED:
ALL DIMENSIONS ARE IN INCHES.

TOLERANCES:	FRACTIONS	DECIMALS	ANGLES
	±1/32	±.01	±1°
		±.005	

REV.	DATE	APPR.	DESCRIPTION	BY
-	03/93	-	-	-

CONTRACT NUMBER DTCG23-92-C-EC1069

DICHROMA, INCORPORATED
ALEXANDRIA, VIRGINIA
(703) 821-1440

CONSULTANTS

U. S. COAST GUARD
CIVIL ENGINEERING
WASHINGTON, DC

USCG. COMDT G-SEC-2
2100 2ND STREET SW
WASHINGTON, DC 20593-0001

MARK	DATE	DESCRIPTION
01	07/17/01	LV

A/E PROJECT NO: 254
CAD FILE NAME: 2172341001
DESIGNED BY: RMS
DRAWN BY: JGD
EDITED BY:
CHECKED BY: RMS
SCALE 1/4" = 1'-0" PLOT SCALE:

SHEET TITLE
G-SEC-2C
WASHINGTON DC

FRAME & TANK ASSY.

REVIEWED BY: | REVIEWED BY: | REVIEWED BY
PROJECT ENG. | BRANCH CHIEF | G-ECV-3D
CHIEF, CIVIL ENG | DATE

PROJECT NUMBER | DRAWING NUMBER
172341

DISCIPLINE/SHT NO
98-

SHEET 1 OF 4