NOTES:

⚠1 SET TO 2250 PSIG

QTY REQD	CAGE CODE	SYM	PART OR IDENTIFYING NO	NOMENCLATURE OR DESCRIPTION	MATERIAL SPECIFICATION	ZONE	ITEM NO
⚠1 1			SFE-501G125A10BYP	STRAINER, SUCTION			18
1			RPEC-QAN-FAB	VALVE, RELIEF, 3/8" NPT			17
1			S12S37AK25R	REXROTH-HYDRAULIC PUMP(GEAR)			16
1			HC-120	HYDRO-CRAFT-FILTER BREATHER CAP			15
1			G1204C3A 3000NDD	MOTOR, HYDRAULIC			14
1			3S1500U3B	EXHAUST SILENCER, SPARK ARRESTING			13
1			YP-114254	CONTROL, THROTTLE			12
1			L90AE-DE	ENGINE, DIESEL			11
1			3FA35-10-N12 -15-A	FILTER, RETURN			10
1			1002-657-X-63BSAE AAX5"	PUMP ADAPTOR			9
1			FG-52	FLOW DIVIDER, ADJUSTABLE PRIORITY			8
1			DV100D2C0Hg	CONTROL VALVE ASSEMBLY			7
1			4512420	GAUGE, PRESSURE			6
1			22663002-1	HOSE ASSEMBLY			5
1			DR 404RD	BLOWER ASSEMBLY			4
1			2AD6WINX3	VALVE, INFLATION			3
1			22663001-1	FRAME & TANK ASSEMBLY			2
			22663000	POWER PACK ASSEMBLY			1

PARTS LIST

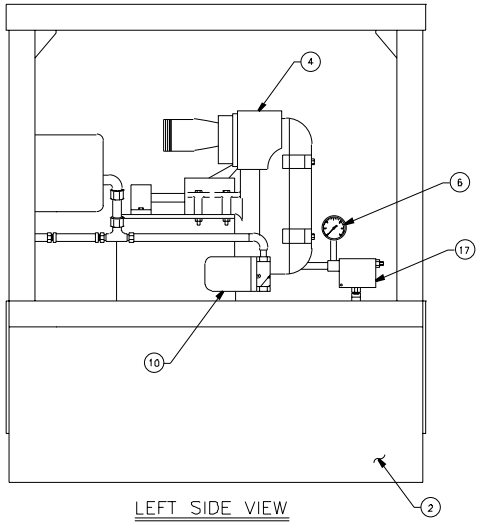

LEFT SIDE VIEW

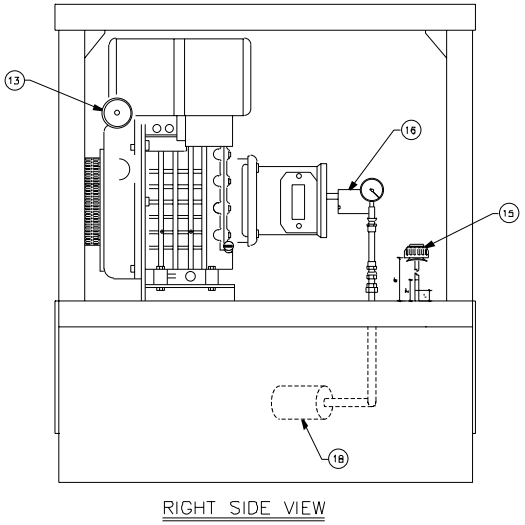

RIGHT SIDE VIEW

① POWER PACK ASSEMBLY

PRECIOUS METAL INDICATOR CODE						
WEIGHTS						
STRESS						
MATERIALS & PROCESSES						
QUALITY ASSURANCE						
MANUFACTURING ENGRG		PART DASH NO.	NEXT	FINAL	NEXT ASSY	USED ON
ADDITIONAL APPROVALS	DATE		NEXT ASSY		APPLICATION	

REV	DATE	APPR.	DESCRIPTION	BY
A	07/17/01	-	MEPALT 054-B-REEL-ALL-02 REPLACE HYDRAULIC FLUID FILL CAP PART 15. WITH CAP/DIPSTICK COMBINATION 11/23/96 P/N PB8-558-0	-

CONTRACT NUMBER DTCG23-92-C-EC1069

UNLESS OTHERWISE SPECIFIED
ALL DIMENSIONS ARE IN INCHES
TOLERANCES: FRACTIONS ±1/32 DECIMALS ±.01 ±.005 ANGLES ±1°

DICHROMA, INCORPORATED
ALEXANDRIA, VIRGINIA
(703) 921-1440

CONSULTANTS

U. S. COAST GUARD
CIVIL ENGINEERING
WASHINGTON, DC

USCG COMDT G-SEC-2
2100 2ND STREET SW
WASHINGTON, DC 20593-0001

MARK	DATE	DESCRIPTION
01	07/17/01	LV

A/E PROJECT NO: 254
CAD FILE NAME: Z1723411D01
DESIGNED BY
DRAWN BY: JCD
EDITED BY
CHECKED BY:

SCALE: 1/4" = 1'-0" PLOT SCALE:

SHEET TITLE

G-SEC-2C
WASHINGTON DC

POWER PACK ASSEMBLY

REVIEWED BY | REVIEWED BY | REVIEWED BY:
PROJECT ENG. | BRANCH CHIEF | G-ECV-30
CHIEF, CIVIL ENG | DATE

PROJECT NUMBER | DRAWING NUMBER
1723411
DISCIPLINE/SHT NO 98-
SHEET 1 OF 2