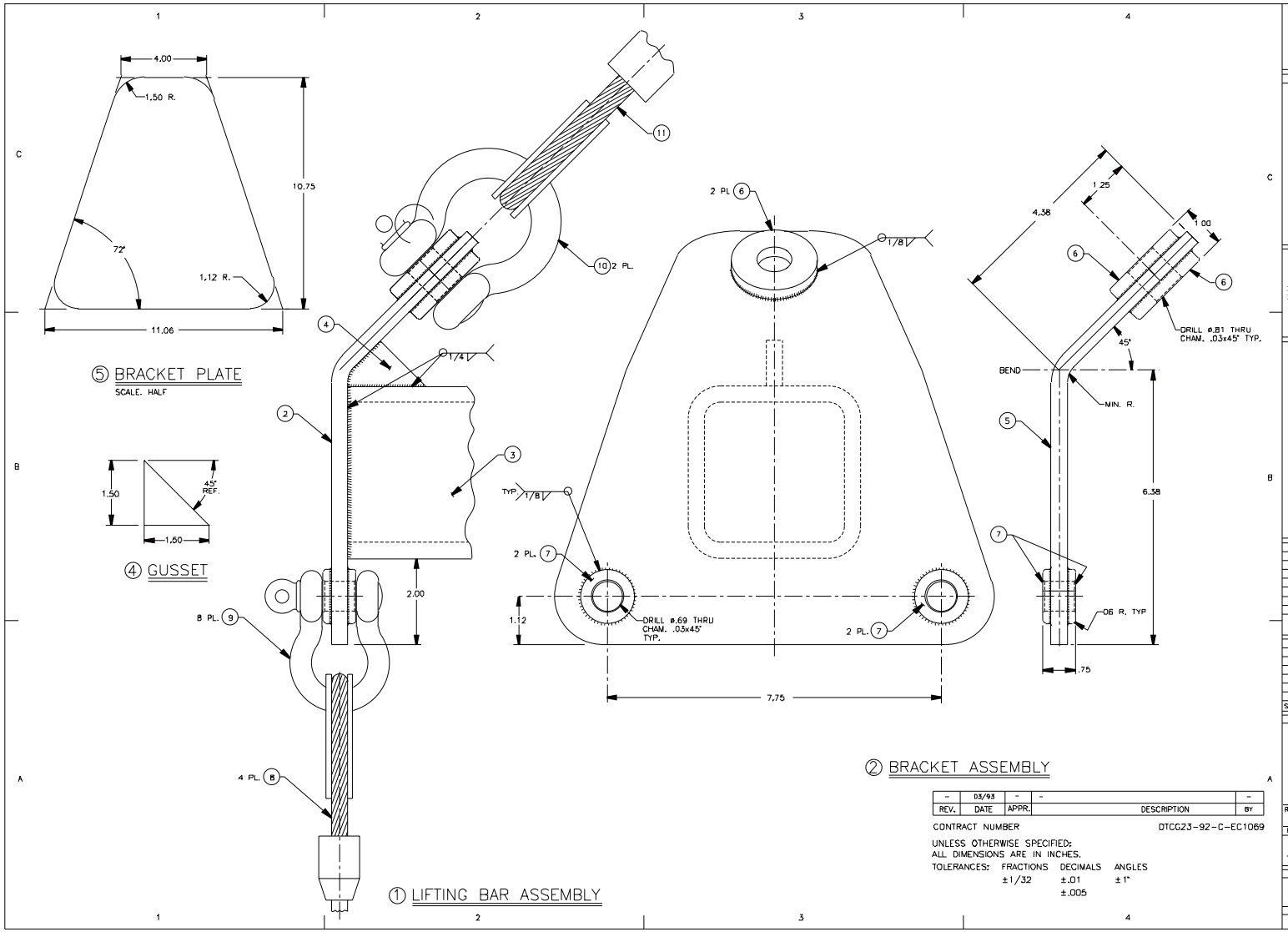

REV.	DATE	APPR.	DESCRIPTION	BY
–	03/93	–	–	–

CONTRACT NUMBER DTCG23-92-C-EC1069

UNLESS OTHERWISE SPECIFIED:
ALL DIMENSIONS ARE IN INCHES.

TOLERANCES:	FRACTIONS	DECIMALS	ANGLES
	±1/32	±.01	±1°
		±.005	

DICHROMA, INCORPORATED
ALEXANDRIA, VIRGINIA
(703) 921-1440

CONSULTANTS

U. S. COAST GUARD
CIVIL ENGINEERING
WASHINGTON, DC

USCG. COMDT G-SEC-2
2100 2ND STREET SW
WASHINGTON, DC 20593-0001

ISSUE		
01	07/17/01	LV
MARK	DATE	DESCRIPTION

A/E PROJECT NO: 254
CAD FILE NAME: 172320001
DESIGNED BY: RMS
DRAWN BY JD
EDITED BY:
CHECKED BY: RMS

SCALE: FULL PLOT SCALE:

SHEET TITLE

G-SEC-2C
WASHINGTON DC

LIFTING BAR ASSY.

REVIEWED BY.	REVIEWED BY:	REVIEWED BY.
PROJECT ENG.	BRANCH CHIEF	G-ECV-3D

CHIEF, CIVIL ENG DATE

PROJECT NUMBER	DRAWING NUMBER
	172320
DISCIPLINE/SHF NO	
98–	SHEET 2 OF 2