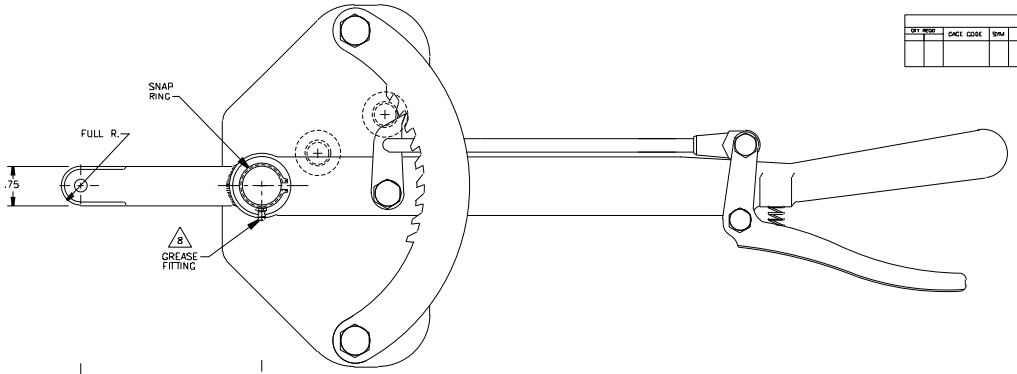

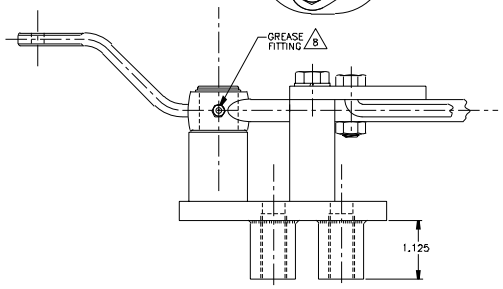

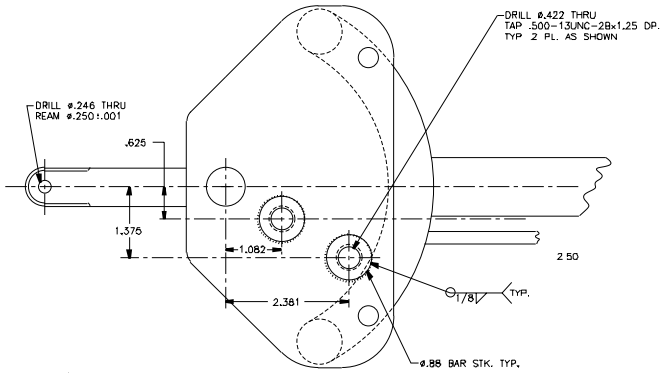

PARTS LIST								
QTY REQD		CAGE CODE	SYM	PART OR IDENTIFYING NO	NOMENCLATURE OR DESCRIPTION	MATERIAL SPECIFICATION	ZONE	ITEM NO.
				172317-1	ALTER FROM BATAVIA METAL PROD. NO. 2499	CS		1

ALTERED ITEM DRAWING

NOTES:

1. INTERPRET DRAWING PER MIL-STD-100E
2. UNLESS OTHERWISE SPECIFIED:
   A. BREAK ALL SHARP EDGES: .005-.015R.
   B. FILLET RADIE .01-.02R.
   C. SURFACE FINISH 125
   D. ALL FLAME OR SAW CUT EDGES SHALL BE GROUND SMOOTH
3. WELDING SMAW PROCESS PER AWS D14.6. USING E7018 LOW-HYDROGEN ELECTRODES PER AWS A5.5 AND MIL-E-22200/1 REMOVE ALL FLUX AND SPLATTER AFTER WELDING.
4. FINISH PER DSI-SPEC-1000A.
5. PRE-LUBRICATE OPERATING LEVER SHAFT WITH WATER-RESISTANT GREASE AFTER FINISH IS FULLY CURED.
6. ONLY THE ITEM DESCRIBED ON THIS DRAWING WHEN PROCURED FROM THE VENDOR LISTED HEREON IS APPROVED BY THE COGNIZANT DESIGN ACTIVITY FOR USE IN THE APPLICATION SPECIFIED HEREON. A SUBSTITUTE ITEM SHALL NOT BE USED WITHOUT PRIOR APPROVAL OF THE COGNIZANT DESIGN ACTIVITY.
7. IDENTIFICATION OF THE APPROVED SOURCE OF SUPPLY HEREON IS NOT TO BE CONSTRUED AS A GUARANTEE OF PRESENT OR CONTINUED AVAILABILITY AS A SOURCE OF SUPPLY FOR THE ITEM DESCRIBED ON THE DRAWING.

8. GREASE FITTING: ALEMITE NO. 1966-S.

9. ROUND BAR STOCK SAE 1018

REV.	DATE	APPR.	DESCRIPTION	BY
-	03/93	-	-	-

CONTRACT NUMBER DTCG23-92-C-EC1069

UNLESS OTHERWISE SPECIFIED:
ALL DIMENSIONS ARE IN INCHES.

TOLERANCES:	FRACTIONS	DECIMALS	ANGLES
	±1/32	±.01	±1°
		±.005	

DICHROMA, INCORPORATED
ALEXANDRIA, VIRGINIA
(703) 921-1440

CONSULTANTS

U. S. COAST GUARD
CIVIL ENGINEERING
WASHINGTON, DC

USCG. COMDT G-SEC-2
2100 2ND STREET SW
WASHINGTON, DC 20593-0001

ISSUE		
01	07/17/01	LV
MARK	DATE	DESCRIPTION

A/E PROJECT NO: 254
CAD FILE NAME: 2172317D01
DESIGNED BY: RWS
DRAWN BY: JD
EDITED BY:
CHECKED BY: RWS
SCALE FULL PLOT SCALE:

SHEET TITLE
G-SEC-2C
WASHINGTON DC

LEVER & RATCHET ASS'Y

REVIEWED BY: REVIEWED BY: REVIEWED BY
PROJECT ENG. BRANCH CHIEF G-ECV-3D
CHIEF, CIVIL ENG DATE

PROJECT NUMBER DRAWING NUMBER
172317
DISCIPLINE/SHT NO
98-
SHEET 1 OF 1