NOTES:

1 INTERPRET DRAWING PER MIL-STD-100E

2. UNLESS OTHERWISE SPECIFIED.

A. BREAK ALL SHARP EDGES: .005-.015R.

B. FILLET RADII: .01-.02R.

C. SURFACE FINISH 125

3. MATERIALS:

A: DISC: CRES 316 PLATE .437 NOM THK PER MIL-S-5059.

B: FLANGE: STRUCTURAL CARBON STEEL PLATE .437 NOM. THK. PER ASTM A36.

C: TUBE: AISI 1018 CARBON STEEL ROUND MECHANICAL SEAMLESS COLD DRAWN TUBING 11.50 O.D. NOM. x .375 NOM. WALL.

4 WELDING: CARBON STEEL; SMAW PROCESS PER AWS D14.6, USING E7018 LOW-HYDROGEN ELECTRODES PER AWS A5.5 AND MIL-E-22200/1. STAINLESS STEEL: SMAW PROCESS PER AWS D14.6, USING E316 ELECTRODES PER MIL-E-22200/2. REMOVE ALL FLUX AND SPLATTER AFTER WELDING. ALL JOINTS SHALL BE WIRE BRUSHED, CLEAN OF ALL SLAG, DE-GREASED AND DYE PENETRANT INSPECTED PER AWS D14.6

5 STEEL STAMP PART NUMBER 22662006 WITH .25 HIGH CHARACTERS IN APPROXIMATE LOCATION AS SHOWN PER MIL-STD-130.

6. FINISH: MASK ALL STAINLESS STEEL SURFACES AND FINISH PER OSI-SPEC-1000A.

PARTS LIST

QTY REQD		CAGE CODE	SYM	PART OR IDENTIFYING NO	NOMENCLATURE OR DESCRIPTION	MATERIAL SPECIFICATION	ZONE	ITEM NO.
				-1	DISK ASSY., BRAKE			1
				-2	DISC .437 NOM. THK. ø16 1/4" BLANK CRES 316	MIL-S-5059		2
				-3	FLANGE PL. .437 NOM. THK. ø11 3/4" BLANK	ASTM A36		3
				-4	TUBE, MECH. TBG. 11.50 OD. x .375 W. AISI 1018	ASTM A519		4

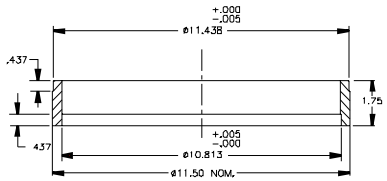

④ TUBE

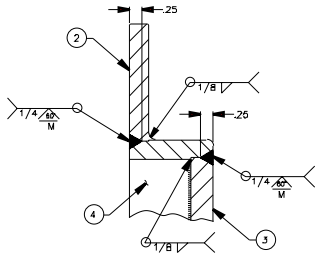

DETAIL-A

SCALE: FULL

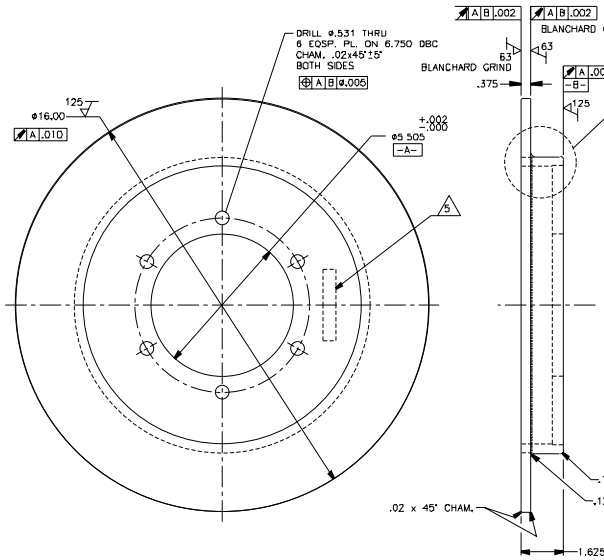

① DISC ASSEMBLY

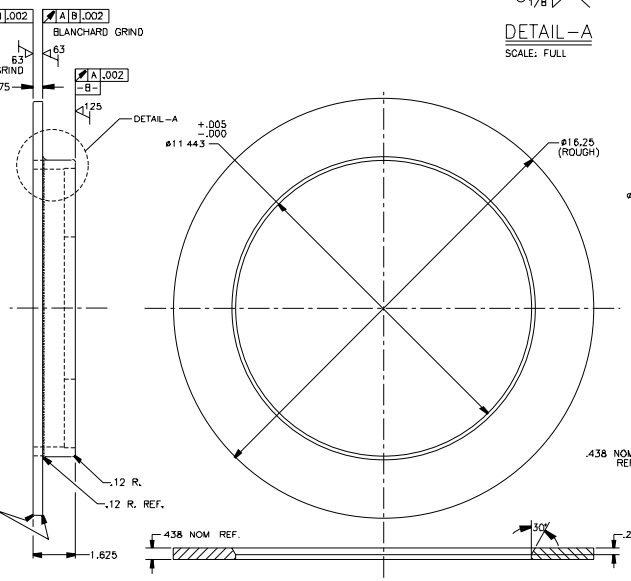

② DISC

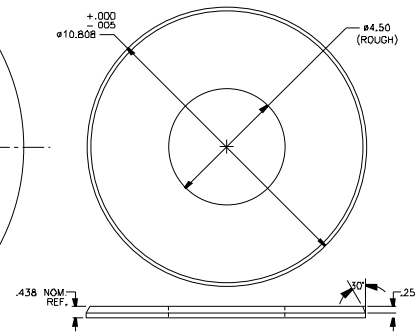

③ FLANGE

REV.	DATE	APPR.	DESCRIPTION	BY
-	03/95	-	-	-

CONTRACT NUMBER DTCG23-92-C-EC1069

UNLESS OTHERWISE SPECIFIED:
ALL DIMENSIONS ARE IN INCHES.

TOLERANCES:	FRACTIONS	DECIMALS	ANGLES
	±1/32	±.01	±1°
		±.005	

DICHROMA, INCORPORATED
ALEXANDRIA, VIRGINIA
(703) 921-1440

CONSULTANTS

U. S. COAST GUARD
CIVIL ENGINEERING
WASHINGTON, DC

USCG. COMDT G-SEC-2
2100 2ND STREET SW
WASHINGTON, DC 20593-0001

ISSUE		
01	07/17/01	LV
MARK	DATE	DESCRIPTION

A/E PROJECT NO: 254
CAD FILE NAME: 2172315001
DESIGNED BY: RWS
DRAWN BY: JD
EDITED BY:
CHECKED BY: RWS

SCALE HALF PLOT SCALE:

SHEET TITLE

G-SEC-2C
WASHINGTON DC

DISC ASSY, BRAKE

REVIEWED BY: REVIEWED BY: REVIEWED BY

PROJECT ENG. BRANCH CHIEF G-ECV-3D

CHIEF, CIVIL ENG DATE

PROJECT NUMBER DRAWING NUMBER
172315

DISCIPLINE/SHT NO
98-

SHEET 1 OF 1