NOTES:

1. APPLICABLE STANDARDS/SPECIFICATIONS:
   A. DOD-STD-00100D(AR)
   B. MIL-T-31000(I)
2. MATERIAL:
   ALUMINUM ANGLE 3.00 X 3.00 X 3/8
   6063-T52
3. BREAK ALL CORNERS AND SHARP EDGES

LIST OF MATERIALS

ITEM NO.	NO. REQD.	DESCRIPTION	PART NO.	COMPANY
1	1	BRACKET	17662	
2	2	3/8-16 X 7/8 LG.		SOC. HD. CAP SCR.
3	2	3/8 NOM		LOCK WASHER

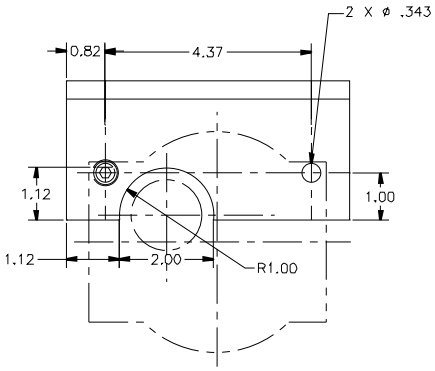

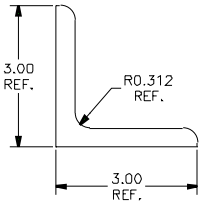

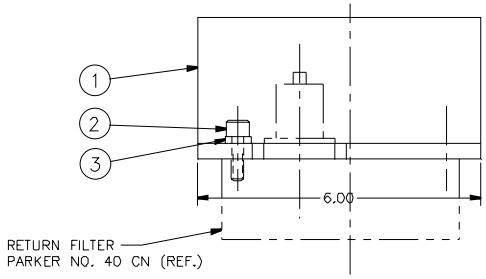

CONTRACT NO.DTCG23-91-C-EC1071
UNLESS OTHERWISE SPECIFIED
ALL DIMENSIONS ARE IN INCHES
TOLERANCES: DIM. XX± 06 XXX± 010
ANG.

DICHROMA, INCORPORATED
ALEXANDRIA, VIRGINIA
(703) 921-1440

CONSULTANTS

U. S. COAST GUARD
CIVIL ENGINEERING
WASHINGTON, DC

USCG COMDT G-SEC-2
2100 2ND STREET SW
WASHINGTON. DC 20593-0001

ISSUE

MARK	DATE	DESCRIPTION
01	07/17/01	LV

A/E PROJECT NO: 254
CAD FILE NAME: 217662001
DESIGNED BY: M.F.C.
DRAWN BY: PAT
EDITED BY:
CHECKED BY:

SCALE 1" = 1'-0" PLOT SCALE:

SHEET TITLE

G-SEC-2C
WASHINGTON DC

BRACKET, FILTER MOUNT

REVIEWED BY | REVIEWED BY: | REVIEWED BY
PROJECT ENG. | BRANCH CHIEF | G-ECV-3D
CHIEF, CIVIL ENG | 12/18/91 DATE

PROJECT NUMBER | DRAWING NUMBER
17662

DISCIPLINE/SHT NO
98-

SHEET 1 OF 1