NOTES:

1. APPLICABLE STANDARDS/SPECIFICATIONS:
   A. DOD- STD-00100D(AR)
   B. MILL-T-31000(I)

2. PLASTIC TAGS: BLACK W/ WHITE BACKGROUND WITH 5/32 BLOCK LETTERS

3. X SYMBOL MEANS AMOUNT OF TIMES OR PLACES USED.

LIST OF MATERIALS

ITEM NO	NO REQRD	DESCRIPTION	PART NO.	COMPANY
1	1	BRACKET GAUGE MOUNTING	17661	
2	1	NAME TAG		
3	1	NAME TAG		
4	1	NAME TAG		
5	1	NAME TAG		
6	1	NAME TAG		
7	1	NAME TAG		
8	16	NO. 4 x 1/4 LG		ROUND HEAD DRIVE SCREW
9	1	PRESSURE GAUGE	HCIP-040P	HYDRO- CRAFT
10	1	PRESSURE GAUGE	HCIP-210P	HYDRO- CRAFT
11	1	PRESSURE GAUGE	HCIP-350P	HYDRO- CRAFT
12	1	PRESSURE GAUGE	05-02-0100	MURPHY
13	1	TACHOMETER R.P.M. GAUGE	116-9961-E88942-25	DEUTZ
14	1	TEMPERATURE GAUGE	10-02-0101	MURPHY
15	1	NAME TAG		MARINE POLUTION DRIVE

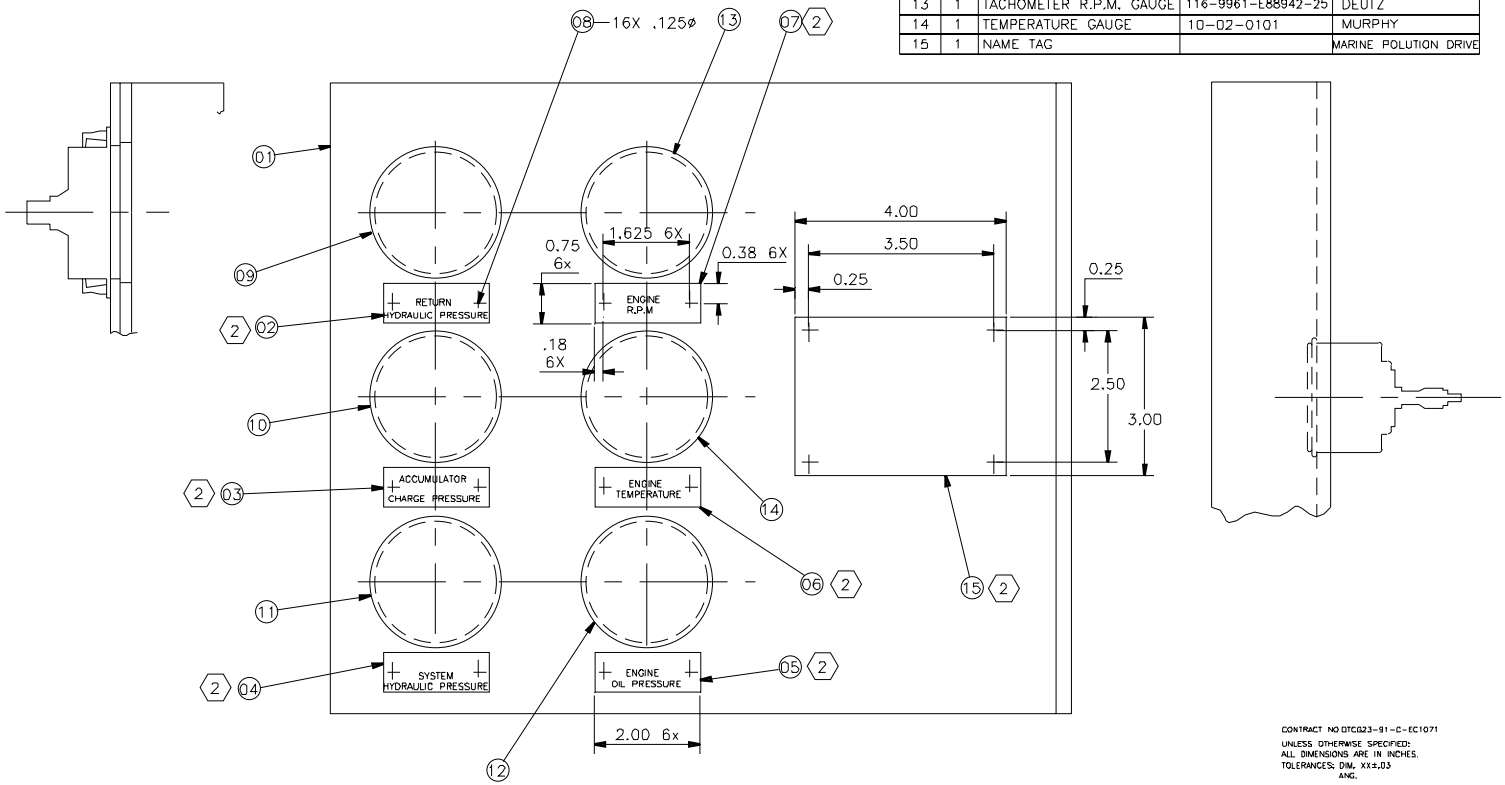

CONTRACT NO DTCG23-91-C-EC1071

UNLESS OTHERWISE SPECIFIED:
ALL DIMENSIONS ARE IN INCHES.
TOLERANCES: DIM. XX±.03
ANG.

DICHROMA, INCORPORATED
ALEXANDRIA, VIRGINIA
(703) 921-1440

CONSULTANTS

U. S. COAST GUARD
CIVIL ENGINEERING
WASHINGTON, DC

USCG. COMDT G-SEC-2
2100 2ND STREET SW
WASHINGTON, DC 20593-0001

ISSUE		
01	07/17/01	LV
MARK	DATE	DESCRIPTION

A/E PROJECT NO 254
CAD FILE NAME. Z17611D01
DESIGNED BY M.P.C.
DRAWN BY: J.M.
EDITED BY:
CHECKED BY:

SCALE: 1" = 1'-0" PLOT SCALE

SHEET TITLE

G-SEC-2C
WASHINGTON DC

GAUGE MNTG SUB- ASS'Y

REVIEWED BY:	REVIEWED BY:	REVIEWED BY:
PROJECT ENG.	BRANCH CHIEF	G-ECV-3D

CHIEF, CIVIL ENG — DATE

PROJECT NUMBER	DRAWING NUMBER
	17611
DISCIPLINE/SHT NO	
98-	SHEET 1 OF 1