NOTES:

1. INTERPRET DRAWING PER MIL-STD-100E.
2. UNLESS OTHERWISE SPECIFIED:
   A. BREAK ALL SHARP EDGES. .005-.015R.
   B. FILLET RADIS .01-.02R.
   C. SURFACE FINISH 125
3. ALUMINUM ALLOY 6061-T6 ROUND BAR STOCK, 4.50 NOM. DIA.
4. CLEAN AND DE-GREASE FINISHED PART.

PARTS LIST

QTY REQD		CAGE CODE	SYM	PART OR IDENTIFYING NO.	NOMENCLATURE OR DESCRIPTION	MATERIAL SPECIFICATION	ZONE	ITEM NO.
				FSR-05-1	SHAFT RND.BAR STK.ø4.50 NOM. 6061-T651	QQ-A-200/8		1

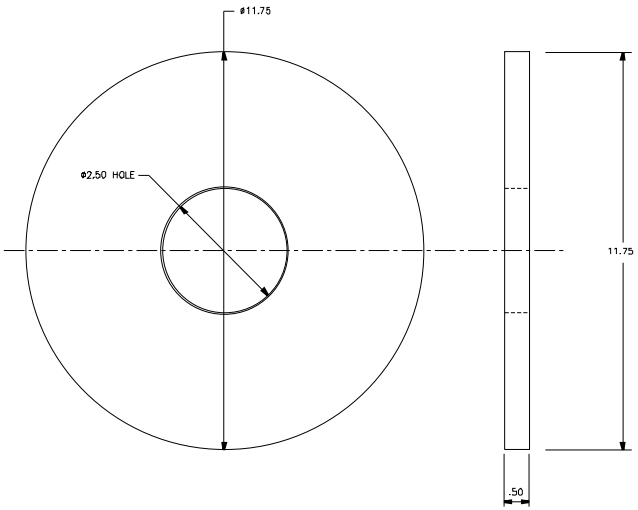

REINFORCING PLATE

2 PLATES EACH

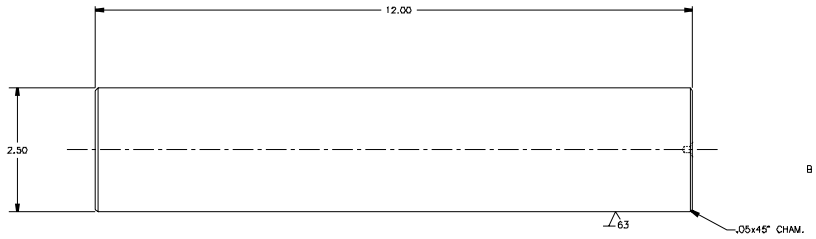

1 STUB SHAFT

REV.	DATE	APPR.	DESCRIPTION	BY
A	6/98	AJC	GENERAL REVISIONS	CMB

CONTRACT NUMBER DTCG-95-DEC-5028

UNLESS OTHERWISE SPECIFIED
ALL DIMENSIONS ARE IN INCHES.

TOLERANCES	FRACTIONS	DECIMALS	ANGLES
	±1/32	±.01	±1°
		±.006	

DICHROMA, INCORPORATED
ALEXANDRIA, VIRGINIA
(703) 921-1440

CONSULTANTS

U. S. COAST GUARD
CIVIL ENGINEERING
WASHINGTON, DC

USCG. COMDT G-SEC-2
2100 2ND STREET SW
WASHINGTON, DC 20593-0001

MARK	DATE	DESCRIPTION
01	06/01/01	LV

A/E PROJECT NO: 236
CAD FILE NAME: 21725FSR0501001
DESIGNED BY: RMS
DRAWN BY: JGO
EDITED BY:
CHECKED BY: AJC

SCALE: FULL PLOT SCALE:

SHEET TITLE

G-SEC-2C
WASHINGTON DC

FAST SWEEP STUB ASSY.

REVIEWED BY: | REVIEWED BY | REVIEWED BY:
PROJECT ENG. | BRANCH CHIEF | G-SEC-2
CHIEF, CIVIL ENG | DATE

PROJECT NUMBER: 98-
DRAWING NUMBER: 1725FSR0501
DISCIPLINE/SHT NO
SHEET 1 OF 1