NOTES:
1. INTERPRET DRAWING PER MIL-STD-100E.
2. ALL DIMENSIONS REFERENCE.
3. SEE SHEET 5 FOR PARTS LIST AND ASSEMBLY INSTRUCTIONS.
4. SOME FEATURES MAY BE OMITTED FOR DRAWING CLARITY.

PARTS LIST							
BY REQD	CAGE CODE	S/M	PART OR IDENTIFYING NO	NOMENCLATURE OR DESCRIPTION	MATERIAL SPECIFICATION	ZONE	FSCM NO

(SEE SEPARATE PARTS LIST)

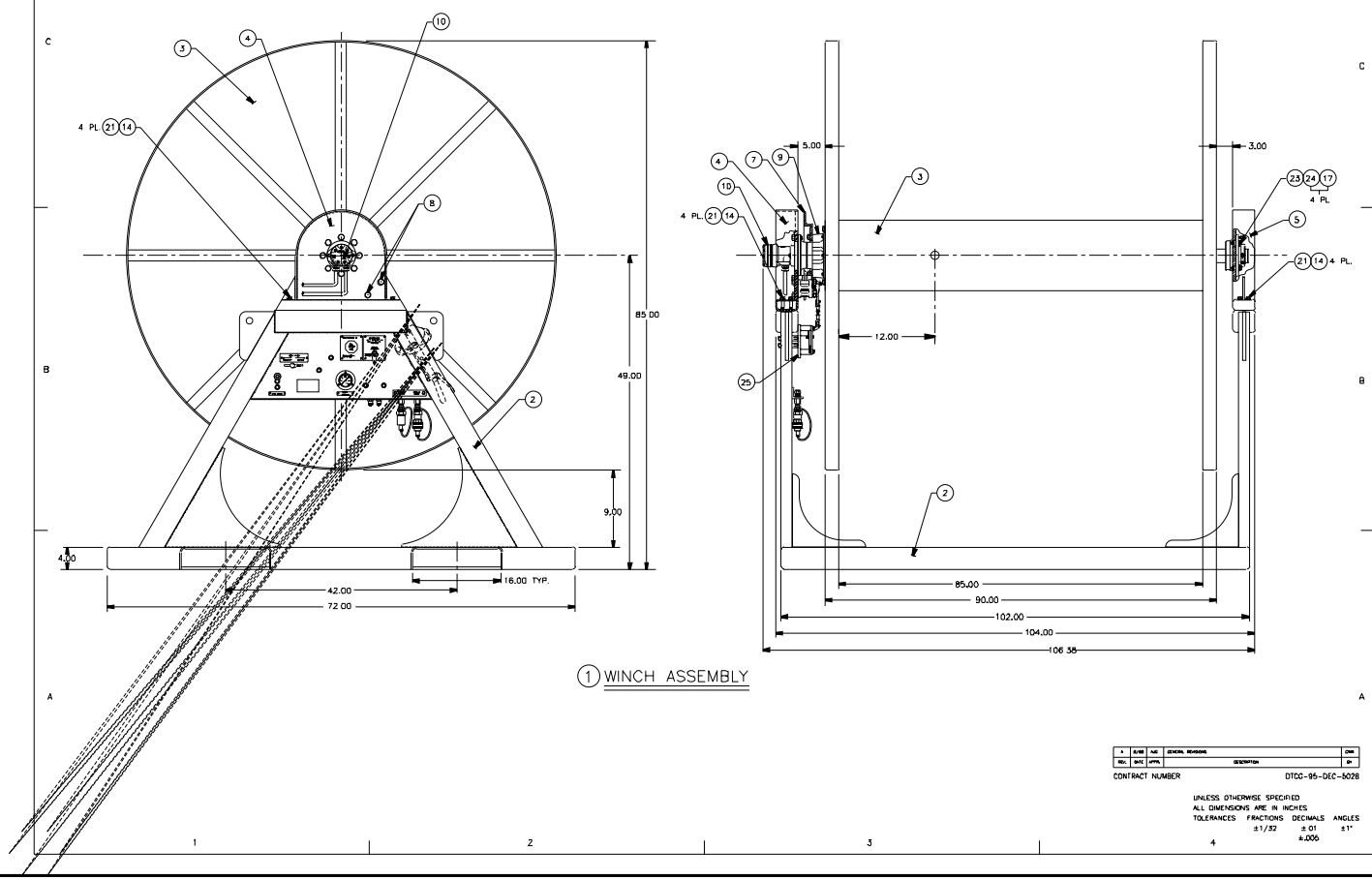

1 WINCH ASSEMBLY

REV.	DATE	APPR.	DESCRIPTION	BY
A	8/88	AJC	GENERAL REVISIONS	CHN

CONTRACT NUMBER DTCG-95-DEC-5028

UNLESS OTHERWISE SPECIFIED
ALL DIMENSIONS ARE IN INCHES
TOLERANCES FRACTIONS ±1/32 DECIMALS ±.01 ±.005 ANGLES ±1°

DICHROMA, INCORPORATED
ALEXANDRIA, VIRGINIA
(703) 921-1440

CONSULTANTS

U. S. COAST GUARD
CIVIL ENGINEERING
WASHINGTON, DC

USCG. COMDT G-SEC-2
2100 2ND STREET SW
WASHINGTON, DC 20593-0001

ISSUE

MARK	DATE	DESCRIPTION
01	06/01/01	LV

A/E PROJECT NO: 236
CAD FILE NAME Z1725FSR0102002
DESIGNED BY: RMS
DRAWN BY: JGD
EDITED BY:
CHECKED BY: AJC

SCALE: 1-1/2"=1'-0" PLOT SCALE:

SHEET TITLE

G-SEC-2C
WASHINGTON DC

FAST SWEEP WINCH ASSY.

REVIEWED BY:	REVIEWED BY:	REVIEWED BY:
PROJECT ENG.	BRANCH CHIEF	G-SEC-2
CHIEF, CIVIL ENG		DATE

PROJECT NUMBER	DRAWING NUMBER
98-	1725FSR0102
DISCIPLINE/SHT NO	SHEET 2 OF 5