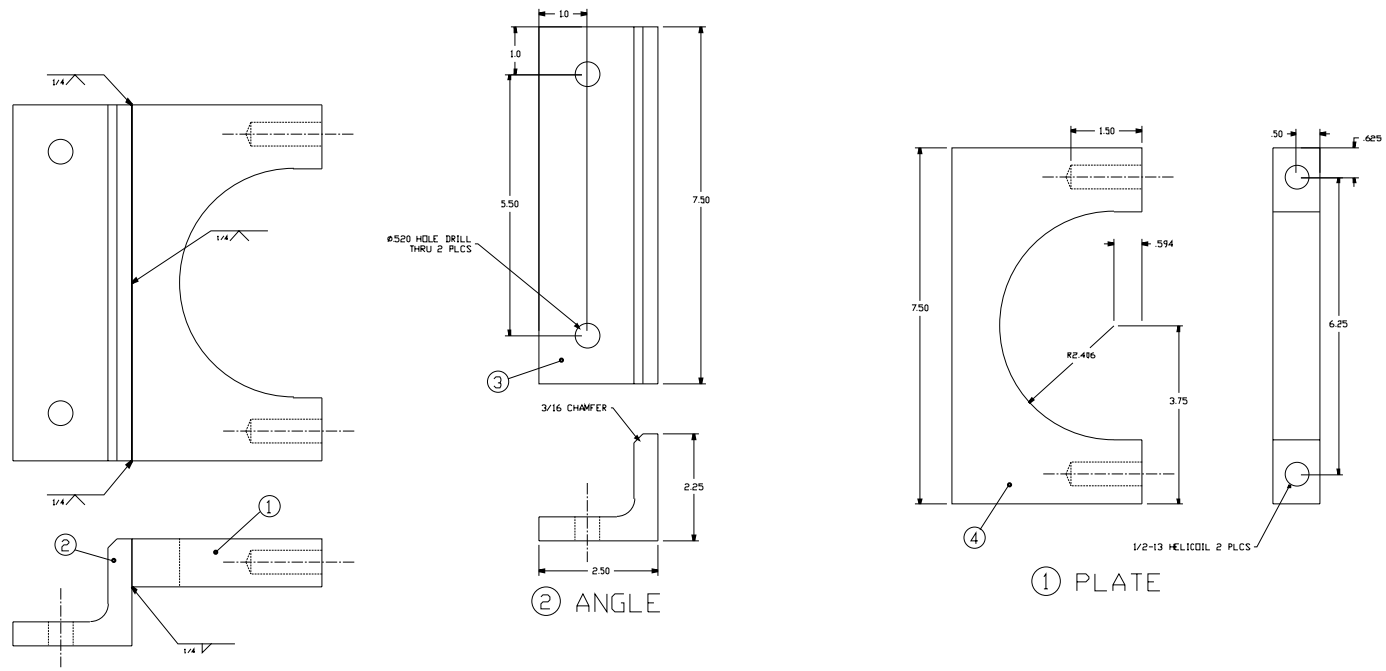

HIGH PRESSURE FILTER
MOUNTING BRACKET
ASSEMBLY

FIND NO.	QTY REQD	CAGE CODE	PART OR IDENTIFYING NO.	NOMENCLATURE OR DESCRIPTION	MATERIAL OR NOTE
4	AR			1" PLATE	6061-T6
3	AR			4" X 4" X 1/2" ANGLE	6061-T6
2	1	OMWHO	-2	ANGLE	
1	1	OMWHO	-1	PLATE	

PARTS LIST

HIGHSTAR INDUSTRIAL TECHNOLOGIES
3301-A BALLARD AVENUE, PORTSMOUTH, VA 23701

UNLESS OTHERWISE SPECIFIED, DIMENSIONS ARE IN INCHES AND DECREES
GENERAL TOLERANCES:
.X DECIMAL ± .03 | .XX DECIMAL ± .010 | .XXX DECIMAL ± .010 | ANGLE ± 2°
REMOVE BURRS AND BREAK SHARP EDGES 0.3 MAX
ANGLE CORNERS R. 06 MAX.
SURFACE ROUGHNESS 125
FRACTIONS ± 1/16

MATERIAL
N/A

DESIGNED:	L. MURPHY	
DRAWN:	G. OLSON	
TRACED:		
CHECKED:	L. MURPHY	
REVIEWED BY:		
APPROVED BY:	GARY VAN MOURIK	
C-SEC		DATE
CAD FILE NO. 6118-1CG	DATE: 2-10-97	

U.S. COAST GUARD CIVIL HEADQUARTERS ENGINEERING

MODEL 82647CG HVPU
HIGH PRESSURE FILTER
MOUNTING BRACKET

SIZE	CAGE CODE	DRAWING NO	REV
D	OMWHO	826118CG	–

SCALE 1"=1" | SHEET 1 OF 1 | CADD

DRAWING NO. 826118CG | SHT 1 | REV –

REVISIONS

ZONE	REV	DESCRIPTION	DATE	APPROVED