DRAWING NO.	SHT	REV
826117CG	1	A

REVISIONS

ZONE	REV	DESCRIPTION	DATE	APPROVED
	A	1. ITEM 2 QTY INC FROM 1 TO 4.		

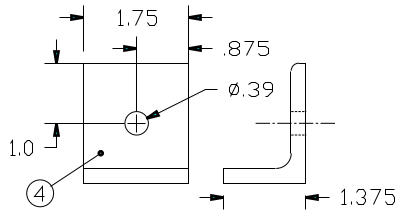

② ANGLE

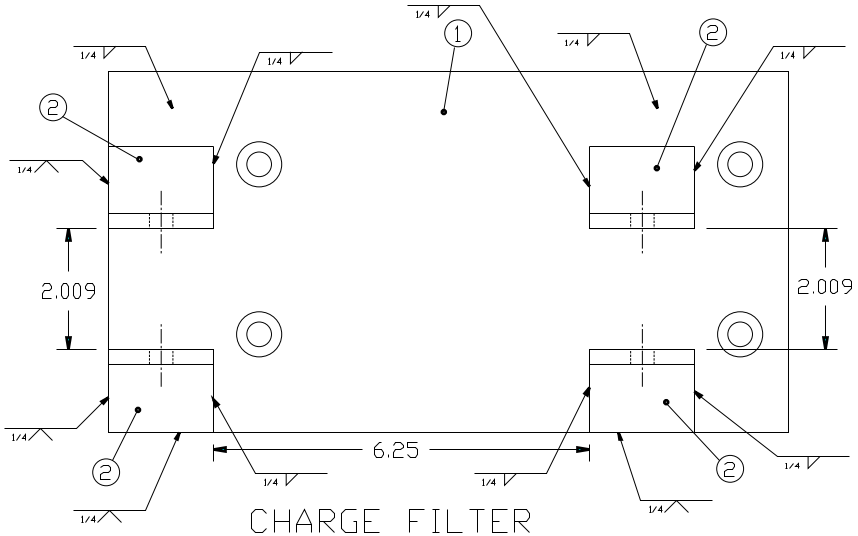

CHARGE FILTER
MOUNTING BRACKET
ASSEMBLY

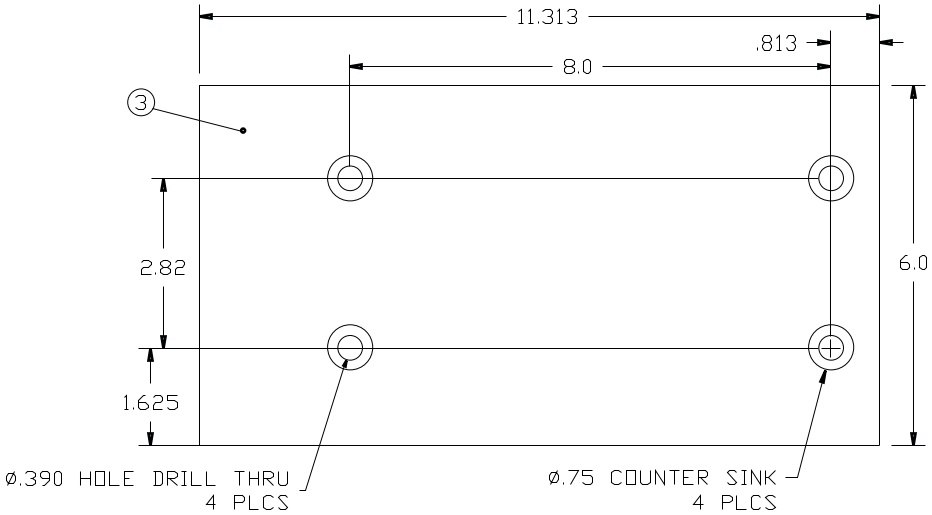

① PLATE

FIND NO.	QTY REQD	CAGE CODE	PART OR IDENTIFYING NO.	NOMENCLATURE OR DESCRIPTION	MATERIAL OR NOTE
4	AR			2" X 2" X 1/4" ANGLE	6061-T6
3	AR			1/2" PLATE	6061-T6
2	4	OMWHO	-2	ANGLE	
1	1	OMWHO	-1	PLATE	

PARTS LIST

HIGHSTAR INDUSTRIAL TECHNOLOGIES
3301-A BALLARD AVENUE, PORTSMOUTH, VA 23701

U.S. COAST GUARD HEADQUARTERS
CIVIL ENGINEERING

UNLESS OTHERWISE SPECIFIED, DIMENSIONS ARE IN INCHES AND DEGREES
GENERAL TOLERANCES:

X DECIMAL	XX DECIMAL	XXX DECIMAL	ANGLE
±.06	±.03	±.010	±2°

REMOVE BURRS AND BREAK SHARP EDGES .03 MAX.
INSIDE CORNERS R .06 MAX.
SURFACE ROUGHNESS: 125
FRACTIONS: ±1/16

MATERIAL: N/A

		DATE
DESIGNED:	L MURPHY	
DRAWN:	D OLSON	
TRACED:		
CHECKED:	L MURPHY	
REVIEWED BY:		
APPROVED BY	GARY VAN MOURIK	
G-SEC		
CAD FILE NO. 6117-1CG		2-10-97

MODEL 82647CG HVPU
CHARGE FILTER
MOUNTING BRACKET

SIZE	CAGE CODE	DRAWING NO.	REV
D	OMWHO	826117CG	A

SCALE: 1"=1" SHEET 1 OF 1 CADD