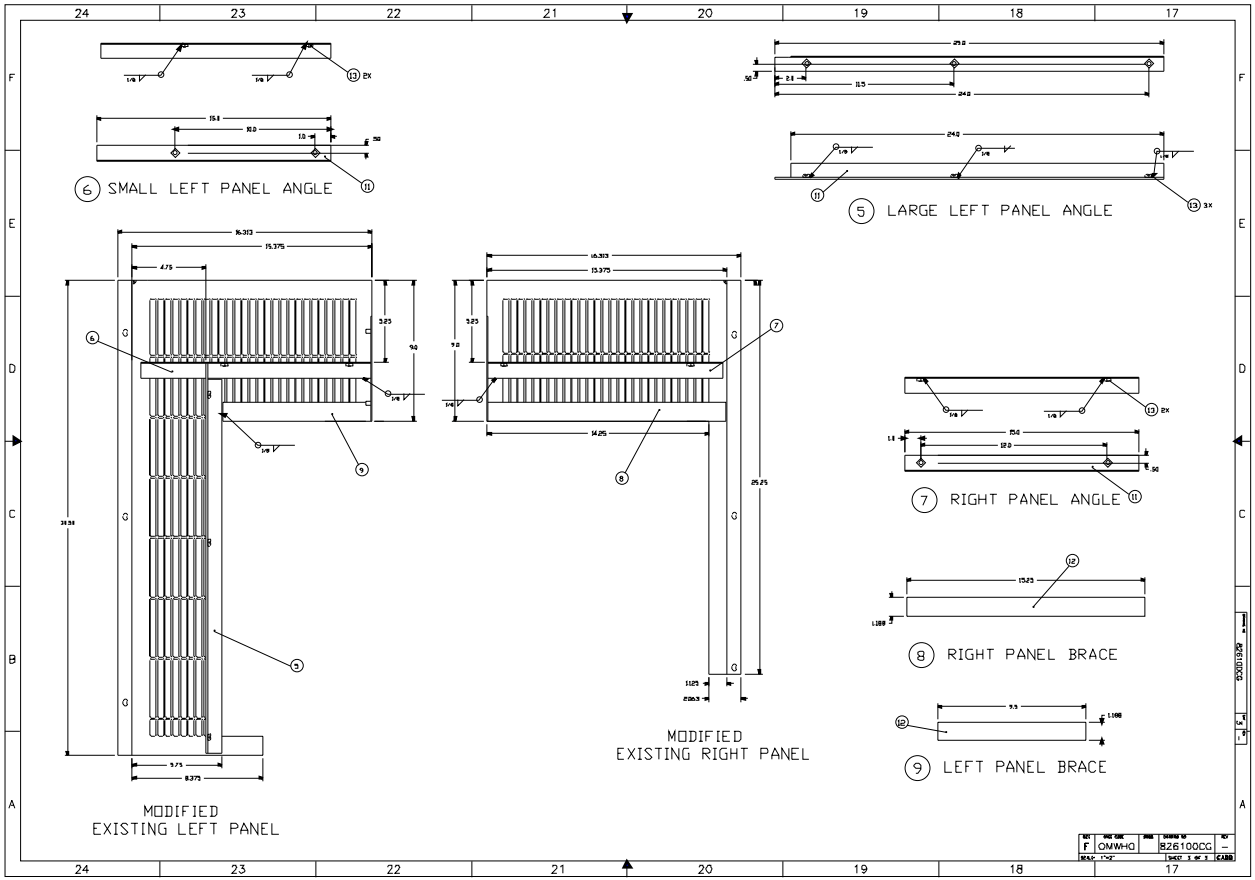

6 SMALL LEFT PANEL ANGLE
5 LARGE LEFT PANEL ANGLE
7 RIGHT PANEL ANGLE
8 RIGHT PANEL BRACE
9 LEFT PANEL BRACE
MODIFIED
EXISTING LEFT PANEL
MODIFIED
EXISTING RIGHT PANEL
F
OMWHQ
826100CG