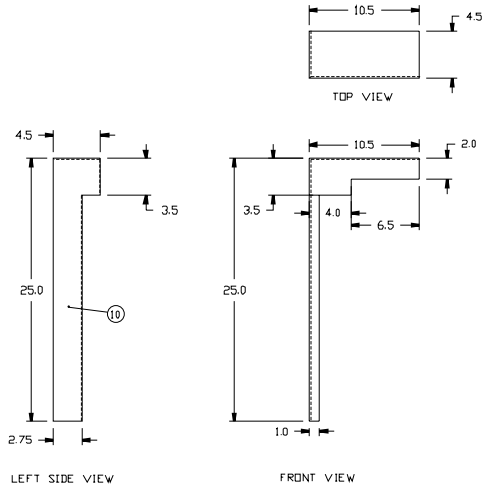

2 LEFT PANEL

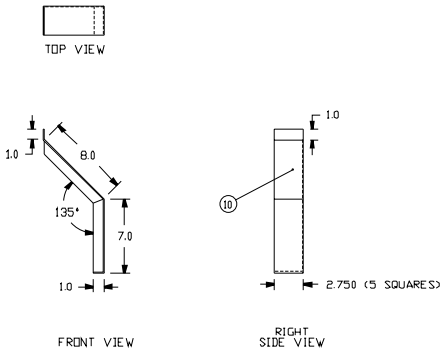

3 LOWER RIGHT PANEL

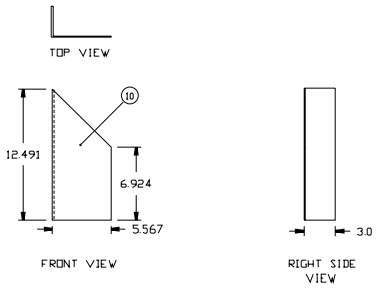

4 SIDE PANEL

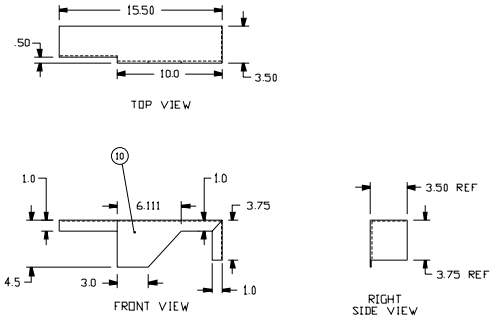

1 RIGHT PANEL

SIZE	CAGE CODE	DWER	DRAWING NO.	REV
F	OMWHO		826100CG	–
SCALE 1"=4"			SHEET 2 OF 3	CADD

826100CG