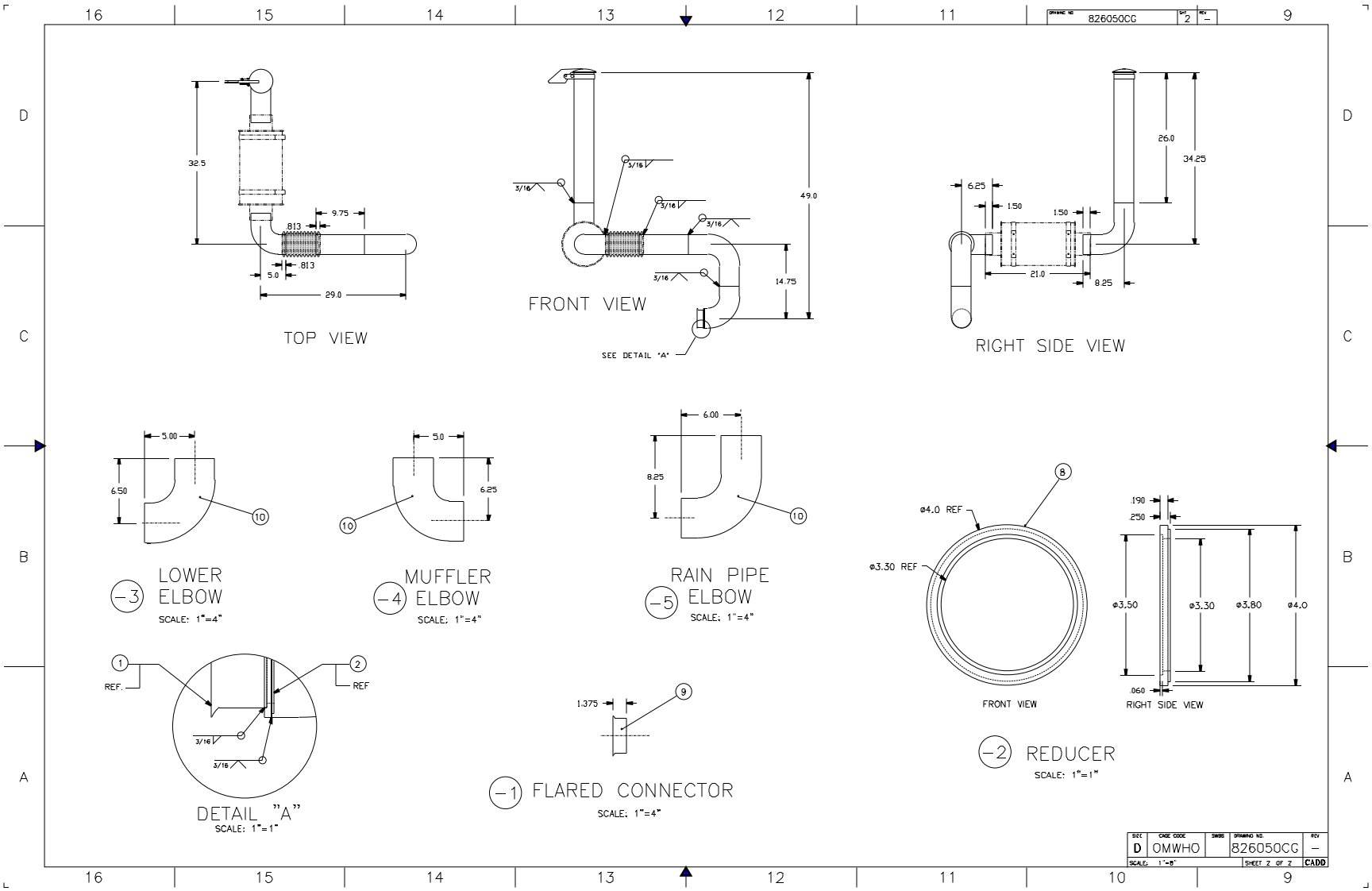

826050CG
2
TOP VIEW
32.5
9.75
.813
.813
5.0
29.0
FRONT VIEW
3/16
49.0
14.75
SEE DETAIL "A"
RIGHT SIDE VIEW
26.0
34.25
6.25
1.50
1.50
21.0
8.25
LOWER ELBOW
-3
SCALE: 1"=4"
5.00
6.50
10
MUFFLER ELBOW
-4
SCALE: 1"=4"
5.0
6.25
RAIN PIPE ELBOW
-5
SCALE: 1"=4"
6.00
8.25
DETAIL "A"
SCALE: 1"=1"
1
2
REF.
REF
FLARED CONNECTOR
-1
SCALE: 1"=4"
1.375
9
REDUCER
-2
SCALE: 1"=1"
ø4.0 REF
ø3.30 REF
8
FRONT VIEW
RIGHT SIDE VIEW
.190
.250
ø3.50
ø3.30
ø3.80
ø4.0
.060
D
OMWHO
826050CG
SCALE: 1"=8"
SHEET 2 OF 2
CADD