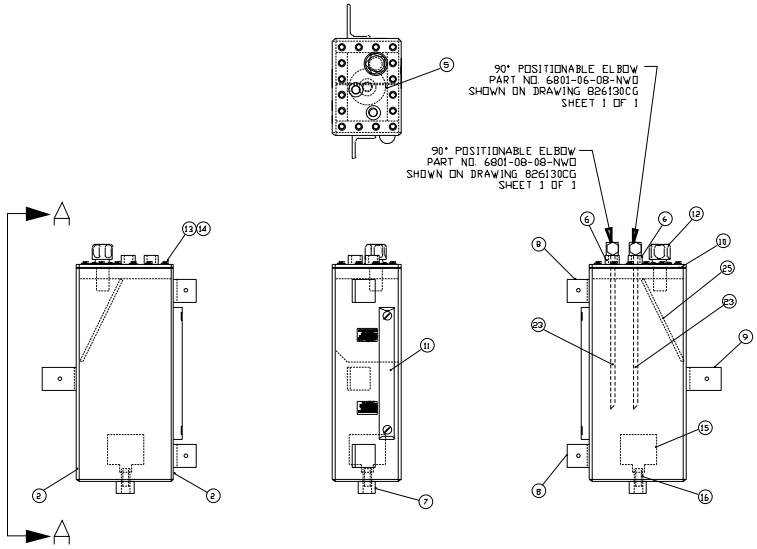

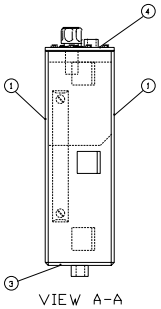

FIND NO.	QTY REQD	CAGE CODE	PART OR IDENTIFYING NO.	NOMENCLATURE OR DESCRIPTION	MATERIAL OR NOTE
25	1		-12	BATTLE	6061-T6
24	AR			TUBING, 3/8" O.D.	316 SS
23	2		-11	TUBE BENDER	
22	AR			NITRILE SHEET 1/8"	
21	AR			BAR, ROUND AL 1 1/2" DIA	6061-T6
20	AR			2" X 2" X 1/4" ANGLE	6061-T6
19	AR			2" X 2" X 1/4" ANGLE	6061-T3
18	AR			1" AL S.S. STOCK	6061-T6
17	AR			1/4" AL PLATE	6061-T6
16	1	51240	5404-08-08	NIPPLE, HEX 3/8" NPT	
15	1	59939	SCH-S-1/2-100	STRAINER, SUCTION	
14	16		1/4"	WASHER, FLAT	316 SS
13	16		1/4"-28 X 1"	CAP SCREW, HEX HEAD	316 SS
12	1	59939	NBB-4IN	CAP, FILLER/BREATHER	
11	1	59939	LD-3117-1S	120V1 GAUGE, LIQUID LEVEL	
10	1		-10	GASKET	
9	2		-9	ANGLE, LARGE MOUNTING	
8	2		-8	ANGLE, SMALL MOUNTING	
7	1		-7	BOSS, LARGE TANK	
6	2		-6	BOSS, SMALL TANK	
5	1		-5	BOSS, TOP PLATE	
4	1		-4	PLATE, TOP	
3	1		-3	PLATE, BOTTOM	
2	2		-2	PLATE, END	
1	2		-1	PLATE, SIDE	

PARTS LIST

HIGHSTAR INDUSTRIAL TECHNOLOGIES
2301-A BALLARD AVENUE, PORTSMOUTH, VA 23701

UNLESS OTHERWISE SPECIFIED DIMENSIONS ARE IN INCHES AND REFER TO BOSCH, TAZONOVA

X DECIMAL	XX DECIMAL	XXX DECIMAL	ANGLE
± .08	± .30	± .010	± 2°

ROUGH DRFS AND DRCH DRAF IRES .02 MIN.
MAX DEPTH 8 IN. MAX
MATERIAL 1/4"AL
THICKNESS 1/16

MATERIAL
N/A

DESIGNED	L MURRAY	
DRAWN	B DUSON	
TRACED		
CHECKED	L MURRAY	
REVIEWED BY		
APPROVED BY	GARY VAN VEUREN	
CODE IDENT NO. 18640-1CG	DATE 2-10-97	

U.S. COAST GUARD HEADQUARTERS
CIVIL ENGINEERING

MODEL B2647CG HVPU
STARTING RESERVOIR
ASSEMBLY

SIZE F | CAGE CODE OMWHO | DRAWING NO. 826040CG | REV —
SCALE 1"=8" | SHEET 1 OF 4 | CADD

826040CG