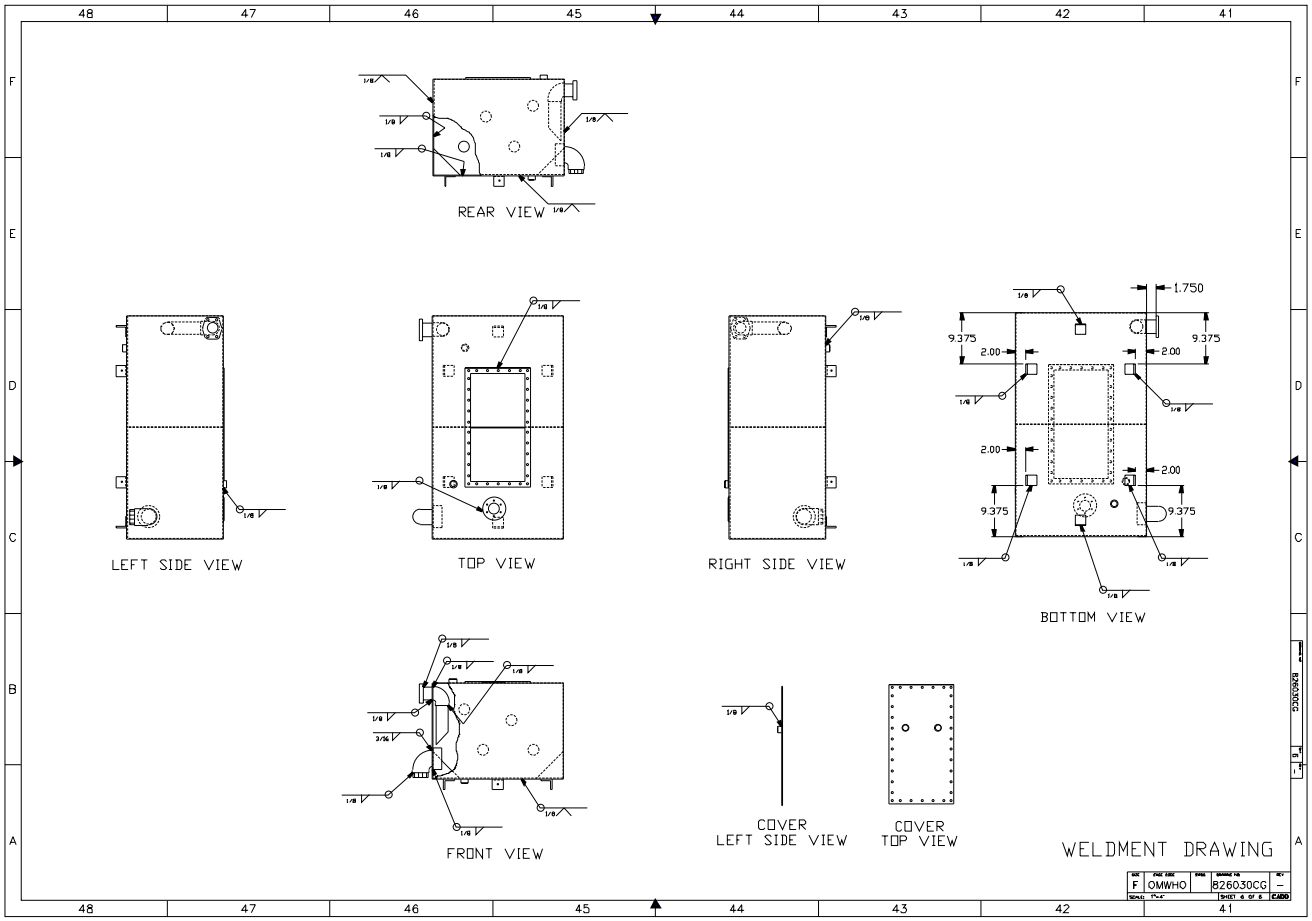
REAR VIEW
LEFT SIDE VIEW
TOP VIEW
RIGHT SIDE VIEW
BOTTOM VIEW
FRONT VIEW
COVER
LEFT SIDE VIEW
COVER
TOP VIEW
1.750
9.375
2.00
1/8
3/16
WELDMENT DRAWING
F
OMWHO
826030CG
SHEET 6 OF 6
CADD