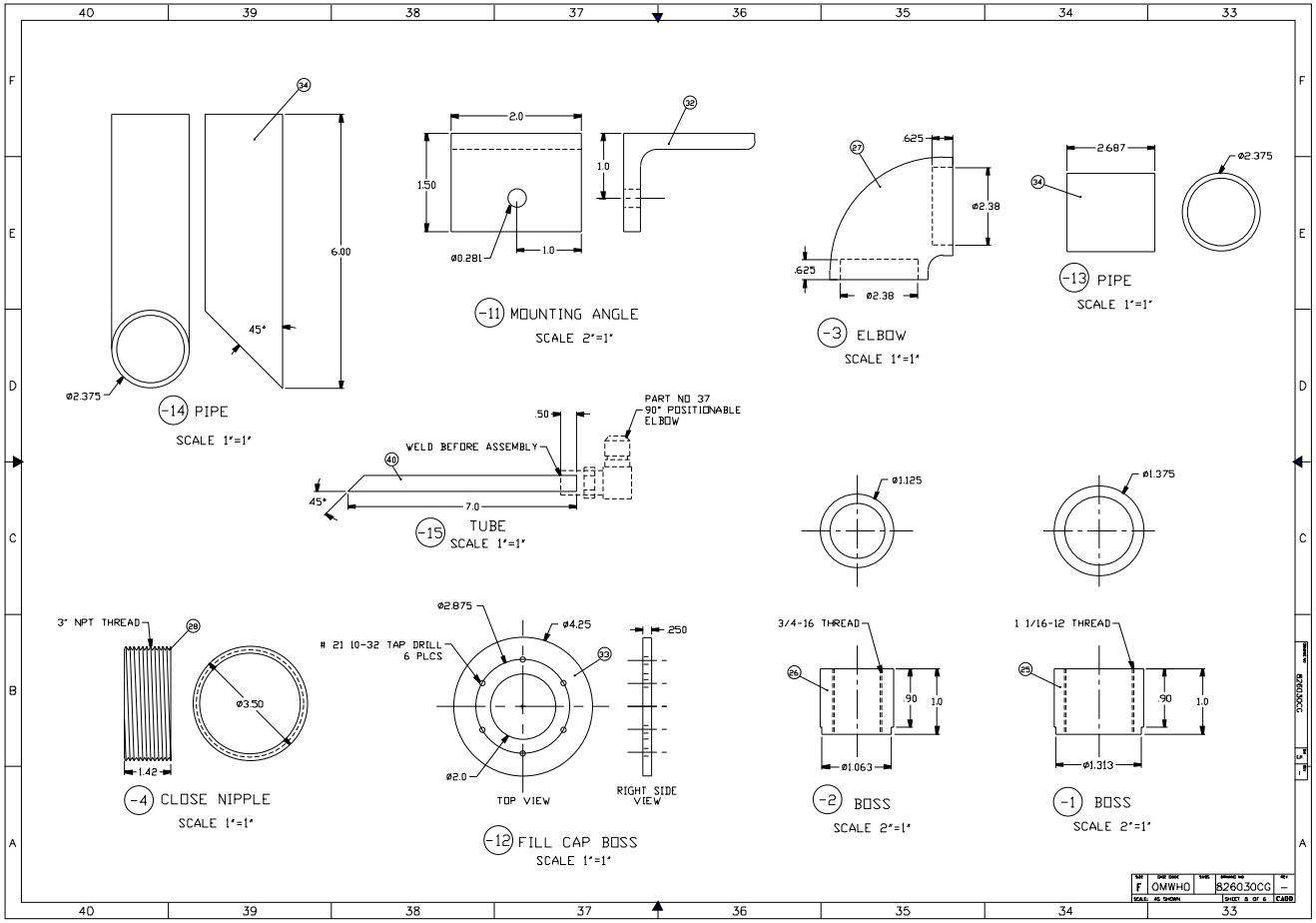

-14 PIPE
SCALE 1"=1"
-11 MOUNTING ANGLE
SCALE 2"=1"
-3 ELBOW
SCALE 1"=1"
-13 PIPE
SCALE 1"=1"
-15 TUBE
SCALE 1"=1"
WELD BEFORE ASSEMBLY
PART NO 37
90° POSITIONABLE
ELBOW
-4 CLOSE NIPPLE
SCALE 1"=1"
3" NPT THREAD
21 10-32 TAP DRILL
6 PLCS
TOP VIEW
RIGHT SIDE
VIEW
-12 FILL CAP BOSS
SCALE 1"=1"
3/4-16 THREAD
-2 BOSS
SCALE 2"=1"
1 1/16-12 THREAD
-1 BOSS
SCALE 2"=1"
F
OMWHO
8260.30CG