NOTES:

1. THOROUGHLY CLEAN HYDRAULIC TANK WITH LINT-FREE CLOTH FOLLOWING ASSEMBLY. (A)

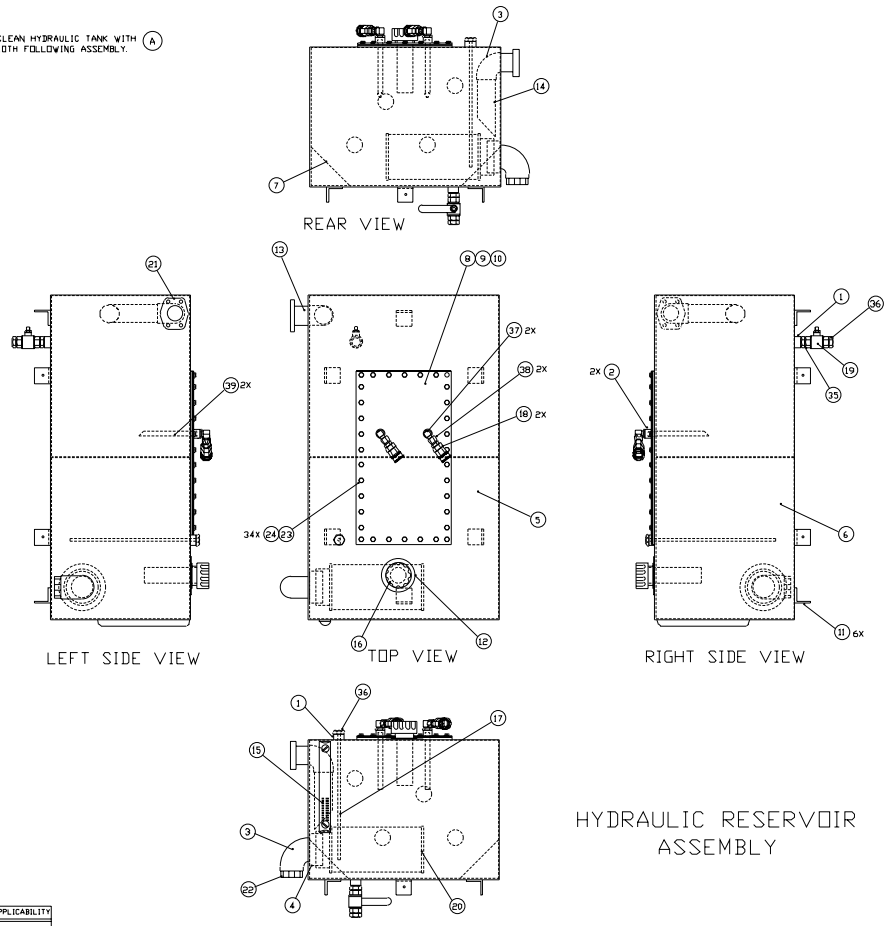

HYDRAULIC RESERVOIR ASSEMBLY

REVISIONS				
ZONE	REV	DESCRIPTION	DATE	APPROVED
F-4 C-2	A	1. ADDED NOTE 1 2. CHANGE CAGE CODE FOR ITEMS 25,28 FROM 36240 TO 5E240		

FIND NO	QTY REQD	CAGE CODE	PART OR IDENTIFYING NO.	NOMENCLATURE OR DESCRIPTION	MATERIAL OR NOTE
40	AR			TUBING, 1/8" .049 WALL	316 SS
39	2	OMWHO	-15	TUBE	
38	2	5E240	6585-8-8	ORB. SWIVEL ADAPTER	
37	2	5E240	6801-810-08-NVO	90 DEGREE POSITIONABLE ELBOW	
36	2	5E240	6488-12-8	ORB. PLUG	
35	1	5E240	3474-12-12-NWO	ORB. CONNECTOR	
34	AR			PIPE, 2" SCH 40	316 SS
33	AR			1/4" PLATE	316 SS
32	AR			2" X 2" X 1/4" ANGLE	316 SS
31	AR			3/8" X 1" FLAT BAR	316 SS
30	AR			NITRILE SHEET, 1/8"	
29	AR			16 GAUGE SHEET	316 SS
28	1			NIPPLE, CLOSE 2" NPT SCH 40	316 SS
27	2			ELBOW, 90 DEGREE 2" NPT 150 LB	316 SS
26	1	23619	WBF-8-SS	BOSS, TANK	316 SS
25	2	23619	WBF-12-SS	BOSS, TANK	316 SS
24	34	64495	94709A414	WASHER, SEALING	
23	34		3/8-16 X 1	CAP SCREW, HEX HEAD	BRASS
22	1	70712	FVO-32-32-F_JIC	ADAPTER, SWIVEL 2" JIC	316 SS
21	1	04L18	AFEX-3065	FLANGE	316 SS
20	1	59838	SEC-100-3-316	STRAINER, SUCTION	
19	1	59838	BV-12-S	VALVE, BALL	
18	2	15A74	F3734/F39-316-10	DISCONNECT, QUICK	
17	1	59838	M-16	MAGNET, 16"	
16	1	59838	PB9-10-5-36	CAP, FILLER/BREATHER	
15	1	59838	LG-1013-SS	SIGHT GAUGE, LIQUID LEVEL	
14	1	OMWHO	-14	PIPE	
13	1	OMWHO	-13	PIPE	
12	1	OMWHO	-12	BOSS, FILL CAP	
11	6	OMWHO	-11	ANGLE, MOUNTING	
10	1	OMWHO	-10	BOSS, COVER PLATE	
9	1	OMWHO	-9	GASKET	
8	1	OMWHO	-8	PLATE, COVER	
7	1	OMWHO	-7	BAFFEL	
6	1	OMWHO	-6	BOTTOM SECTION, RESERVOIR	
5	1	OMWHO	-5	TOP SECTION, RESERVOIR	
4	1	OMWHO	-4	NIPPLE	
3	2	OMWHO	-3	ELBOW	
2	2	OMWHO	-2	BOSS	
1	2	OMWHO	-1	BOSS	

PARTS LIST

HIGHSTAR INDUSTRIAL TECHNOLOGIES
8201-A BALLARD AVENUE, PORTSMOUTH VA 23701

UNLESS OTHERWISE SPECIFIED DIMENSIONS ARE IN INCHES AND DEGREES GENERAL TOLERANCES
X DECIMAL ±X DECIMAL ±.XX DECIMAL ANGLE
± .06 ± .02 ± .010 ±.5°
ROUGH BURRS AND SHARP SHARP EDGES ARE NOT ACCEPTABLE
SURFACE ROUGHNESS 125
MATERIAL +1/16

MATERIAL N/A

DESIGNED L MURPHY
DRAWN D. OLSON
TRACED
CHECKED L MURPHY
REVIEWED BY
APPROVED BY GARY VAN HOURIK

SIZE A CAD FILE NO 8030-1DG DATE 2-10-97 SHEET

U.S. COAST GUARD HEADQUARTERS
CIVIL ENGINEERING

MODEL 82647CG HVPU
HYDRAULIC RESERVOIR
ASSEMBLY

SIZE F CAGE CODE OMWHO DRAWING NO 826030CG REV A

SCALE: NONE SHEET 1 OF 6 CADD

826030CG

SHEET OF REVISION APPLICABILITY						
SHEET	REV					
1	A					
2	-					
3	-					
4	-					
5	-					
6	-					