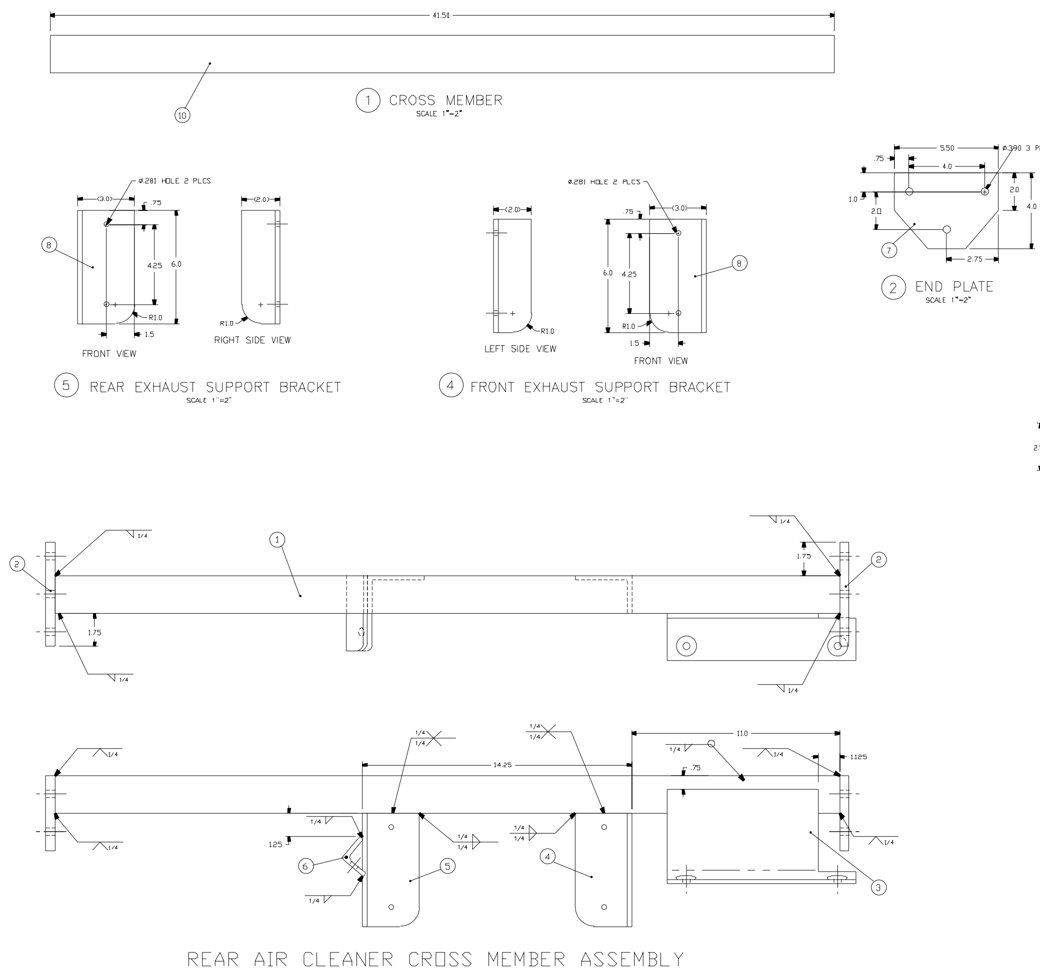

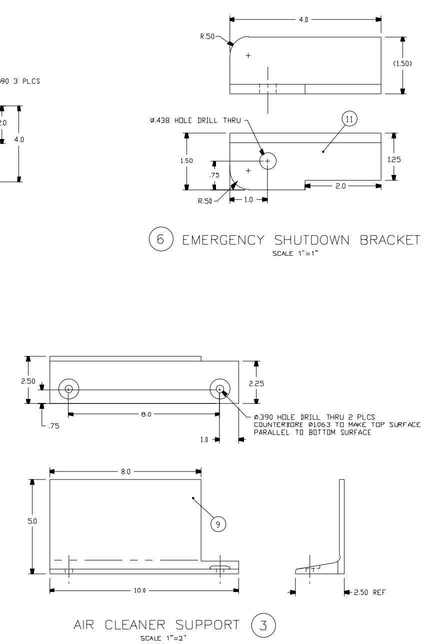

FIND NO	QTY REQD	CAGE CODE	PART OR IDENTIFYING NO.	NOMENCLATURE OR DESCRIPTION	MATERIAL OR NOTE
11	AR			1 1/2" X 1 1/2" X 1/4" ANGLE	6061-T6
10	AR			2" X 2" X 1/4" SQUARE TUBE	6061-T6
9	AR			10" CHANNEL 5.278 LBS PER FT	6061-T6
8	AR			2" X 3" X 1/4" ANGLE	6061-T6
7	AR			1/2" PLATE	6061-T6
6	1	0MWH0	-6	BRACKET, EMERGENCY SHUTDOWN	
5	1	0MWH0	-5	BRACKET, FRONT EXHAUST SUPPORT	
4	1	0MWH0	-4	BRACKET. REAR EXHAUST SUPPORT	
3	1	0MWH0	-3	SUPPORT. AIR CLEANER	
2	2	0MWH0	-2	PLATE, END	
1	1	0MWH0	-1	MEMBER, CROSS	

PARTS LIST

HIGHSTAR INDUSTRIAL TECHNOLOGIES
3301-A BALLARD AVENUE, PORTSMOUTH, VA 23701

U.S. COAST GUARD HEADQUARTERS CIVIL ENGINEERING

UNLESS OTHERWISE SPECIFIED:
DIMENSIONS ARE IN INCHES AND DEGREES
GENERAL TOLERANCES

X DECIMAL	.XX DECIMAL	.XXX DECIMAL	ANGLE
± .08	± .03	± .010	± 2°

REMOVE BURRS AND BREAK SHARP EDGES .03 MAX
INSIDE CORNERS R .06 MAX
SURFACE ROUGHNESS 125
FRACTIONS ±1/16

MATERIAL
N/A

DESIGNED.	L MURPHY
DRAWN	D OLSON
TRACED:	
CHECKED:	L MURPHY
REVIEWED BY:	
APPROVED BY	GARY VAN MOURIK
G-SEC	DATE:
CAD FILE NO 6013-1CG	DATE 2-10-97

MODEL 82647CG HVPU
REAR AIR CLEANER
CROSS MEMBER

SIZE	CAGE CODE	DRAWING NO	REV
F	OMWHO	826013CG	—

SCALE: 1"=2" SHEET 1 OF 1 CADD

REVISIONS

ZONE	REV	DESCRIPTION	DATE	APPROVED

DRAWING NO. 826013CG SHT 1 REV —