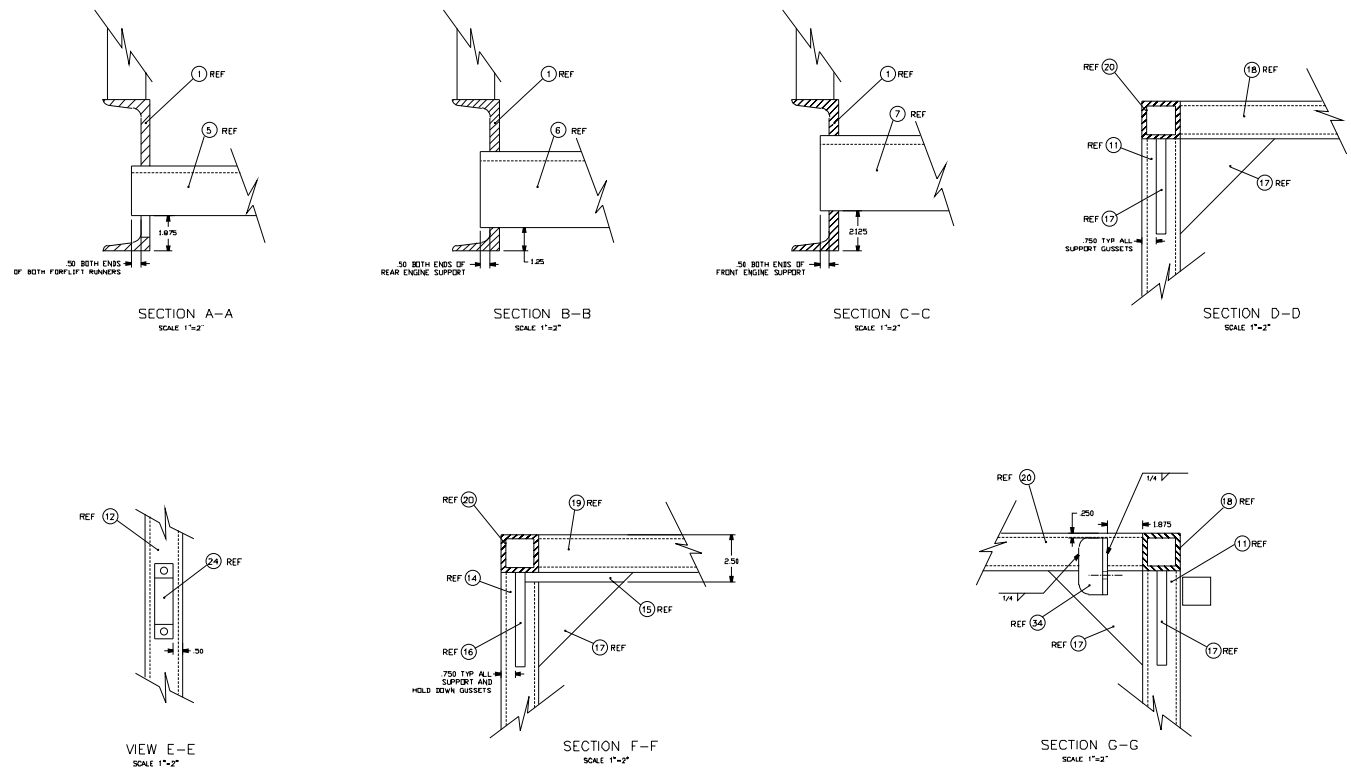

SIZE	CAGE CODE	SHEET	DRAWING NO	REV
F	OMWHO		826010CG	–
SCALE AS SHOWN			SHEET 8 OF 8	CADD

826010CG