NOTES:

1. WELDING TO BE IN ACCORDANCE WITH AWS D1.2.

PARTS LIST					
FIND NO.	QTY REQD	CAGE CODE	PART OR IDENTIFYING NO.	NOMENCLATURE OR DESCRIPTION	MATERIAL OR NOTE
1	1		COMMERCIAL	FLANGE, 6" SLIP-ON, ANSI 150#	AL
2	1 LF		COMMERCIAL	PIPE, 6" SCH 40	AL 6061-T6
3	1		DIXON600AH/SPAL	CAMLOCK, 6" WELDABLE SOCKET	AL
4	8		COMMERCIAL	BOLT, HEX HD. 3/4-10 UNC x 5 1/2 LG	SST
5	16		COMMERCIAL	WASHER, FLAT, 3/4 (NOM)	ST
6	8		COMMERCIAL	WASHER, SPLIT-LOCK, 3/4 (NOM)	SST
7	8		COMMERCIAL	NUT, HEX, 3/4-10 UNC	SST
8	1		COMMERCIAL	RING GASKET, 6" 150# 1/16 THK	BUNA-N

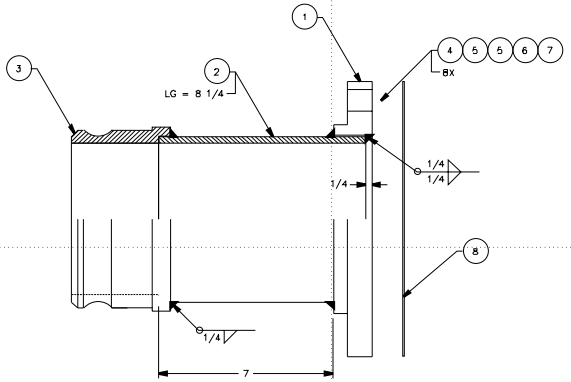

UNLESS OTHERWISE SPECIFIED:
ALL DIMENSIONS ARE IN INCHES.
TOLERANCES: DIM. 1/8
ANG. 5°

GPC – A JOINT VENTURE
WILLIAMSBURG, VA
757-887-7402

CONSULTANTS

DEPARTMENT OF THE NAVY
NAVAL SEA SYSTEMS COMMAND
WASHINGTON, D C 20362

SITE LOCATION:
WAREHOUSE # 12
CHEATHAM ANNEX
WILLIAMSBURG, VA.
23185

NAVSEA DWG NO:
7022715

U. S. COAST GUARD
OCEAN ENGINEERING DIV.
WASHINGTON, DC

USCG, COMDT G-SEC-2
2100 2ND STREET SW
WASHINGTON, DC 20593-0001

ISSUE

MARK	DATE	DESCRIPTION

REFER TO NAVSEA DWG FOR REVISIONS

A/E PROJECT NO: N00024-98-D-4107
CAD FILE NAME: Z17700900 1.DWG
DESIGNED BY: C. MOFFATT 1/28/00
DRAWN BY: M. NAZARETH 1/28/00
EDITED BY:
CHECKED BY: C. MOFFATT 1/28/00

SCALE: PLOT SCALE: 1=1

SHEET TITLE

VISCOUS OIL PUMPING SYSTEM
G-SEC-2C
WASHINGTON DC
CAMLOCK/ANSI DISCHARGE FLANGE

SECTION / ASSEMBLY

REVIEWED BY:	REVIEWED BY:	REVIEWED BY:
PCN	BS	RML
PROJECT ENG.	BRANCH CHIEF	G-SEC-2

W.P. LAYNE, CAPT, USCG — CHIEF, CIVIL ENG
03/15/01 — DATE

PROJECT NUMBER	DRAWING NUMBER
	177009
DISCIPLINE/SHT NO	SHEET 1 OF 1
Z17709D01	