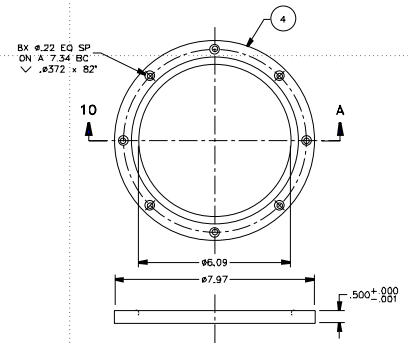

-2 DEFLECTION RING

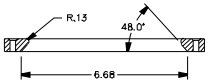

SECTION 10-A
TYP SECT THRU SCREW HOLES

REV	-
CADD	
DRAWING NO.	177001
SHEET	3 OF 3
SIZE	C
SCALE	1/2

GPC - A JOINT VENTURE
WILLIAMSBURG, VA
757-887-7402

CONSULTANTS

DEPARTMENT OF THE NAVY
NAVAL SEA SYSTEMS COMMAND
WASHINGTON, D.C. 20362

SITE LOCATION
WAREHOUSE # 12
CHEATHAM ANNEX
WILLIAMSBURG, VA.
23185

NAVSEA DWG NO.
7022707

DRAWING NO	SHT	REV
177001	3	-

U. S. COAST GUARD
OCEAN ENGINEERING DIV.
WASHINGTON, DC

UNITED STATES COAST GUARD 1790

USCG. COMDT G-SEC-2
2100 2ND STREET SW
WASHINGTON, DC 20593-0001

ISSUE

MARK	DATE	DESCRIPTION

A/E PROJECT NO:	N00024-96-D-4107
CAD FILE NAME:	Z177001D03.DWG
DESIGNED BY:	C. MOFFATT 1/28/01
DRAWN BY:	R. NAZARETH 1/28/00
EDITED BY:	C. MOFFATT 1/28/00
CHECKED BY:	
SCALE:	PLOT SCALE: 1=1

SHEET TITLE

VISCOUS OIL PUMPING SYSTEM
G-SEC-2C
WASHINGTON DC
H2O INJECTION ANNULUS FLANGE

SECTION/DETAIL

REVIEWED BY:	REVIEWED BY:	REVIEWED BY:
PCN	BS	RNL
PROJECT ENG	BRANCH CHIEF	G-SEC-2

W. P. LAYNE, CAPT	03/15/01
CHIEF, CIVIL ENG	DATE

PROJECT NUMBER	DRAWING NUMBER
PROJECT #	177001
DISCIPLINE/SHT NO	SHEET 3 OF 3
Z177001D03	