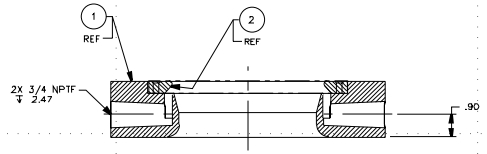

SECTION 7–C
SECTION THRU INJECTION PORTS

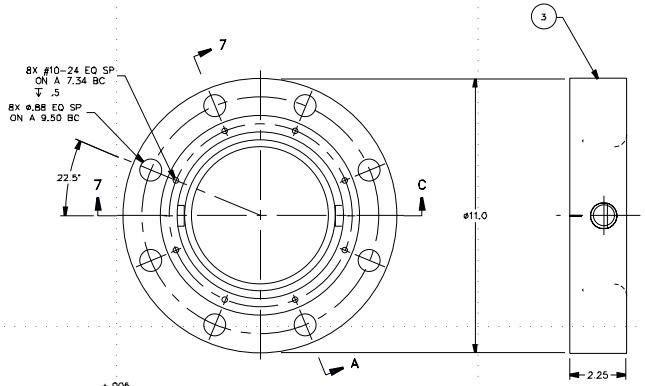

–1 INJECTION FLANGE

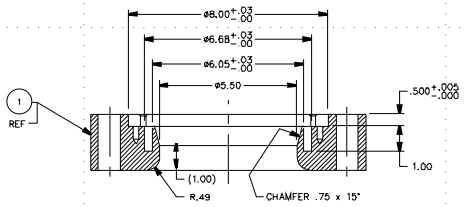

SECTION 7–A
TYP SECT THRU BOLT HOLES
(DEFLECTION RING NOT SHOWN)

SIZE C | DRAWING NO. 177001 | REV – | SHEET 2 OF 3 | SCALE: 1/2 | CADD

GPC – A JOINT VENTURE
WILLIAMSBURG, VA
757-887-7402

CONSULTANTS

DEPARTMENT OF THE NAVY
NAVAL SEA SYSTEMS COMMAND
WASHINGTON, D.C. 20362

SITE LOCATION:
WAREHOUSE # 12
CHEATHAM ANNEX
WILLIAMSBURG, VA.
23185

NAVSEA DWG NO.:
7022707

DRAWING NO. 177001 | SHT 2 | REV –

U. S. COAST GUARD
OCEAN ENGINEERING DIV.
WASHINGTON, DC

USCG. COMDT G-SEC-2
2100 2ND STREET SW
WASHINGTON, DC 20593-0001

ISSUE

MARK	DATE	DESCRIPTION

A/E PROJECT NO. N00024-96-D-4107
CAD FILE NAME: Z177001D02.DWG
DESIGNED BY: C. MOFFATT 1/28/00
DRAWN BY: R. NAZARETH 1/28/00
EDITED BY:
CHECKED BY: C. MOFFATT 1/28/00

SCALE: PLOT SCALE: 1=1

SHEET TITLE

VISCOUS OIL PUMPING SYSTEM
G-SEC-2C
WASHINGTON DC
H2O INJECTION ANNULUS FLANGE

SECTION/DETAIL

REVIEWED BY: PCN	REVIEWED BY: BS	REVIEWED BY: RNL
PROJECT ENG	BRANCH CHIEF	G-SEC-2

W. P. LAYNE, CAPT
CHIEF, CIVIL ENG
3/15/01
DATE

PROJECT NUMBER	DRAWING NUMBER
PROJECT #	177001
DISCIPLINE/SHT NO	SHEET 2 OF 3
Z17701D02	