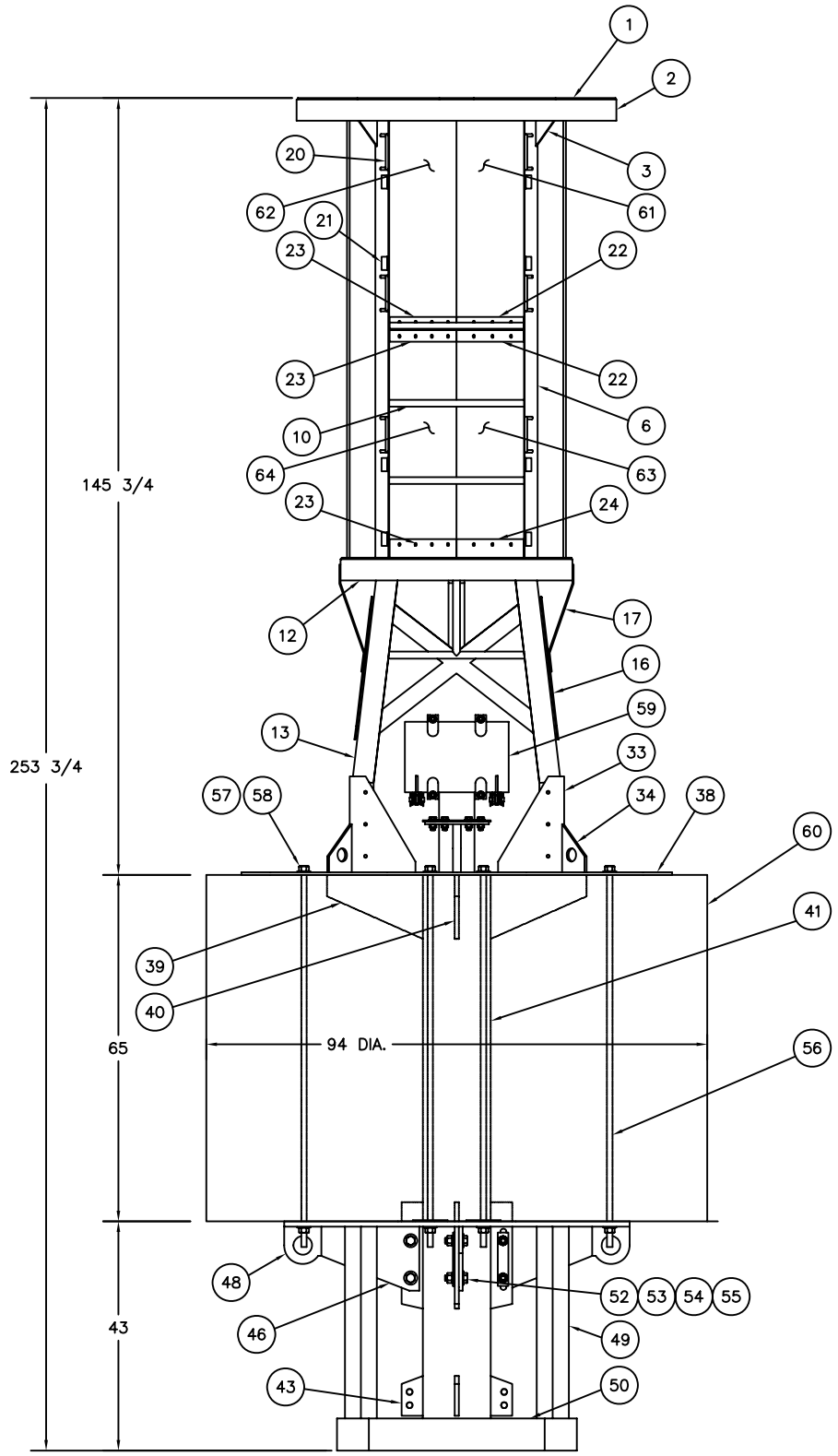

8x22 LFR
ASSEMBLY VIEW
SCALE: 3/4"=1'-0"

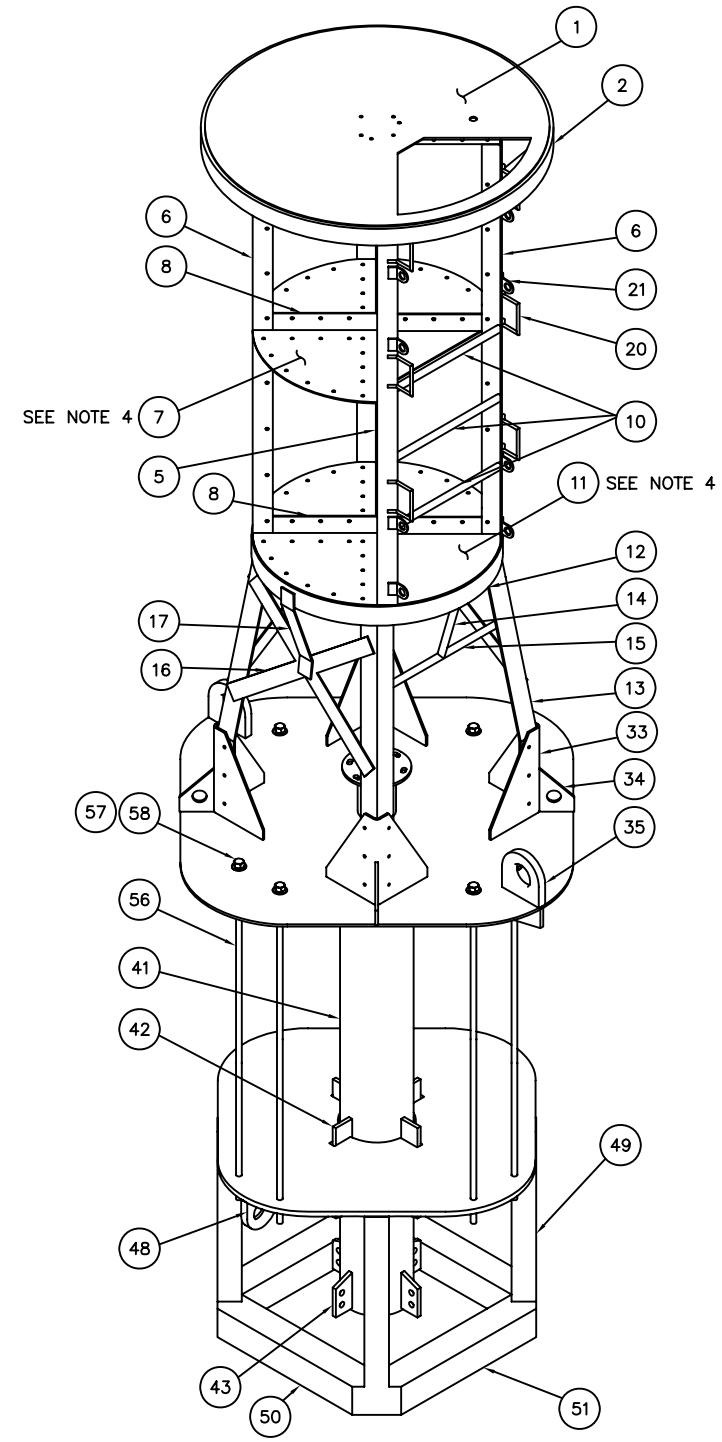

8x22 LFR
ISOMETRIC STRUCTURAL VIEW
SCALE: NONE

REV.	DATE	APPR.	DESCRIPTION	BY

DESIGNED:
DRAWN: S.M.
TRACED:
CHECKED:
REVIEWED BY: Sean McEvoy, PROJECT ENGINEER
REVIEWED BY: Dianna Bo, CG-432B
REVIEWED BY: S.D. Walker, CG-432

U.S. COAST GUARD HEADQUARTERS
OCEAN ENGINEERING
2007 TYPE
8x22 LFR BUOY

APPROVED: S.D. Walker, acting
CHIEF, OFFICE OF CIVIL ENGINEERING
DATE 12/11/07

UNLESS OTHERWISE SPECIFIED:
ALL DIMENSIONS ARE IN INCHES.
TOLERANCES: DIM. ±1/32
ANG. ±1°

DRAWING NUMBER 121185
REV.
SCALE: AS NOTED
SHEET 1 OF 13

PLOTTING SCALE: 3/4"=1'-0"

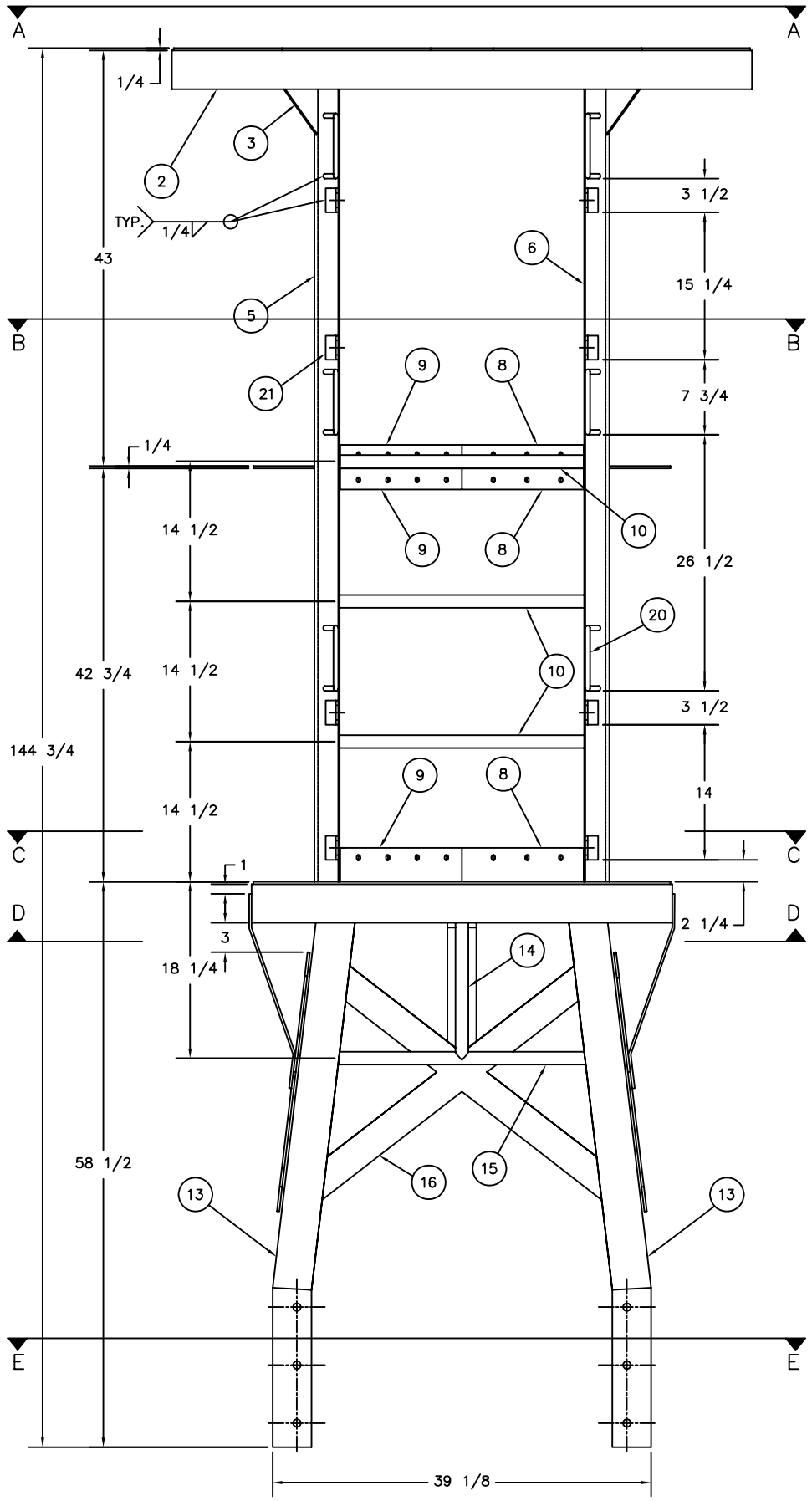

TOWER ASSEMBLY

SCALE: 1-1/2"=1'-0"

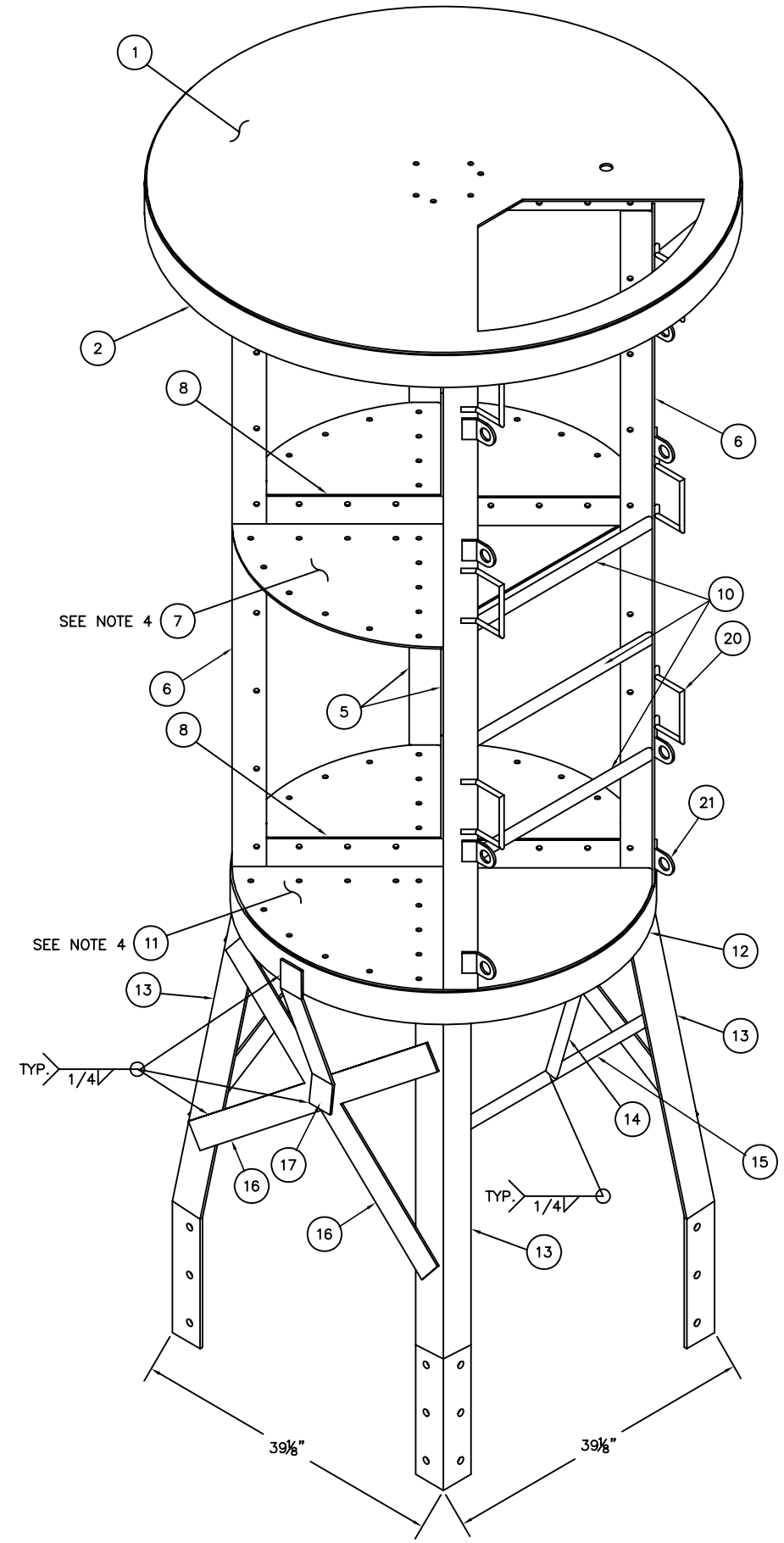

TOWER ISOMETRIC

SCALE: 1-1/2"=1'-0"

REV.	DATE	APPR.	DESCRIPTION	BY

DESIGNED:
DRAWN: S.M.
TRACED:
CHECKED:
REVIEWED BY: Sean McEvoy, PROJECT ENGINEER
REVIEWED BY: Dianna Bo, CG-432B
REVIEWED BY: S.D. Walker, CG-432

U.S. COAST GUARD HEADQUARTERS

OCEAN ENGINEERING

2007 TYPE

8x22 LFR BUOY

APPROVED: S.D. Walker, acting, CHIEF, OFFICE OF CIVIL ENGINEERING

DATE 12/11/07

UNLESS OTHERWISE SPECIFIED:
ALL DIMENSIONS ARE IN INCHES.
TOLERANCES: DIM. ±1/32
ANG. ±1°

DRAWING NUMBER 121185

REV.

SCALE: AS NOTED

SHEET 2 OF 13

PLOTTING SCALE: 1-1/2"=1'-0"

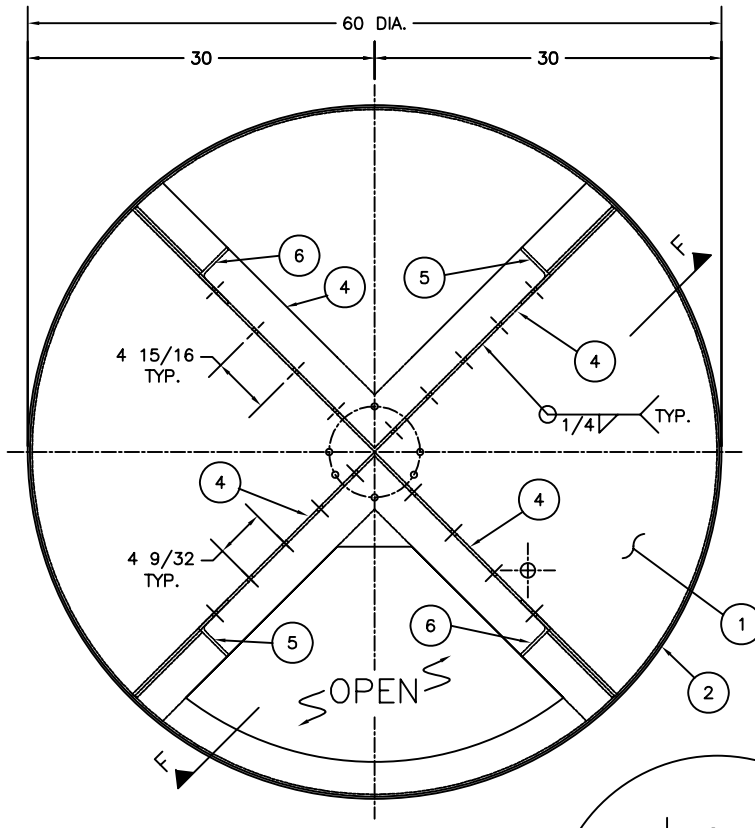

SECTION A–A
SCALE: 1–1/2"=1'–0"

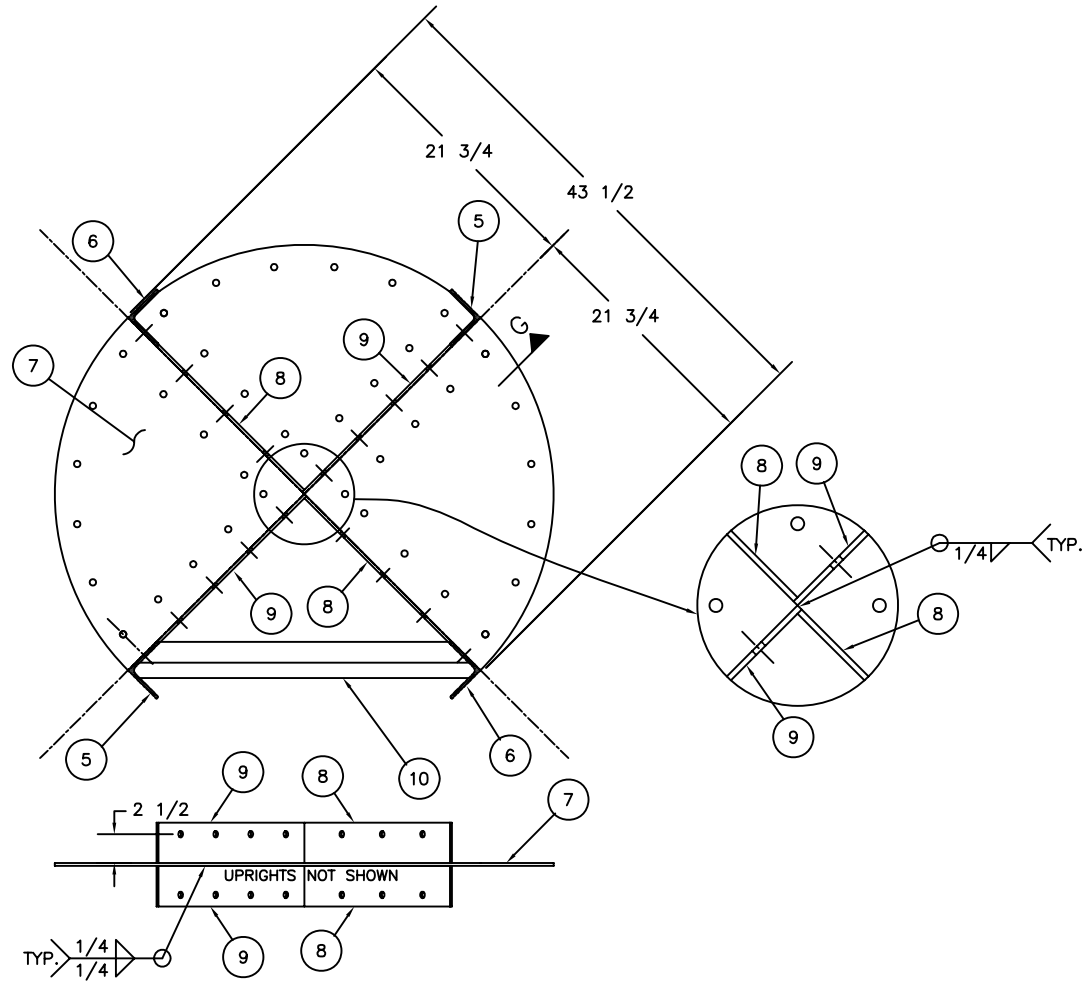

SECTION B–B
SCALE: 1–1/2"=1'–0"

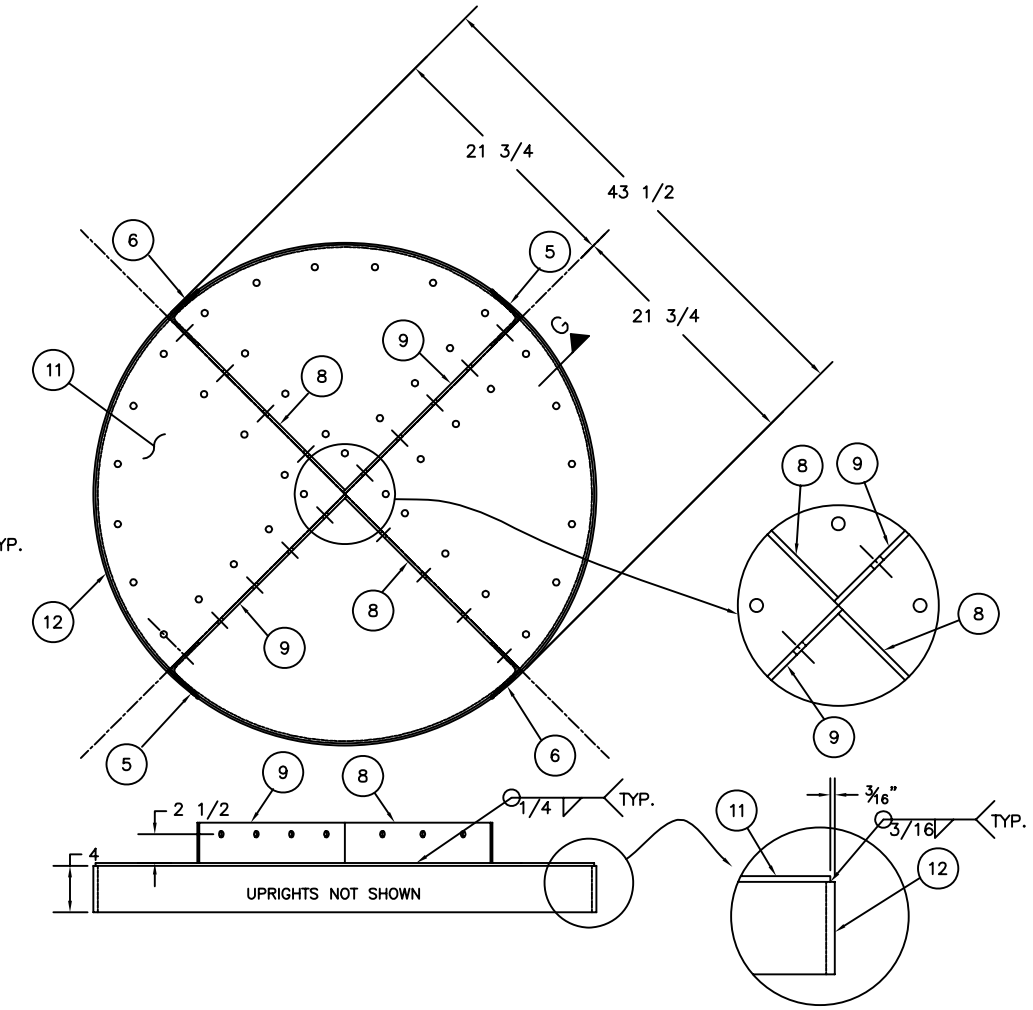

SECTION C–C
SCALE: 1–1/2"=1'–0"

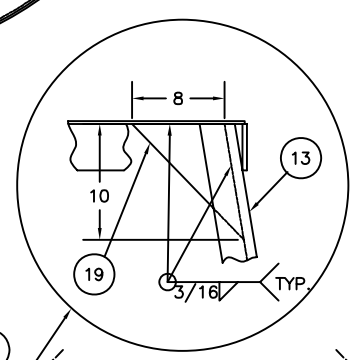

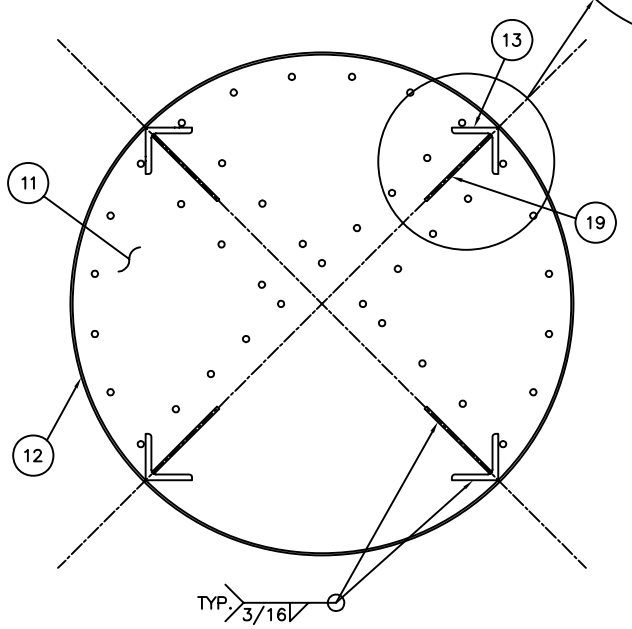

SECTION D–D
SCALE: 1–1/2"=1'–0"

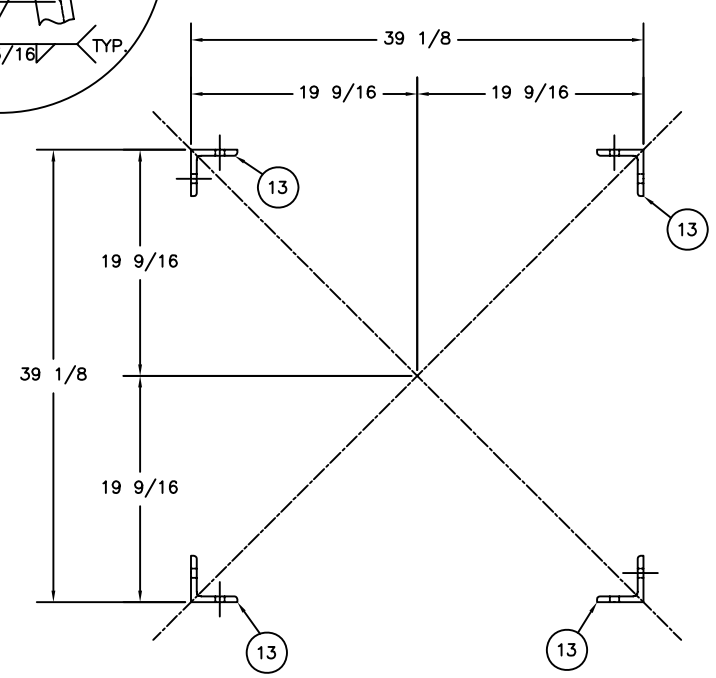

SECTION E–E
SCALE: 1–1/2"=1'–0"

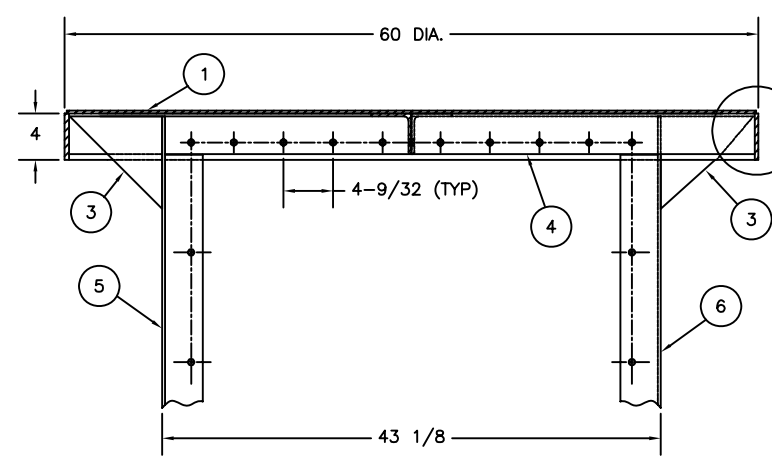

SECTION F–F
SCALE: 1–1/2"=1'–0"

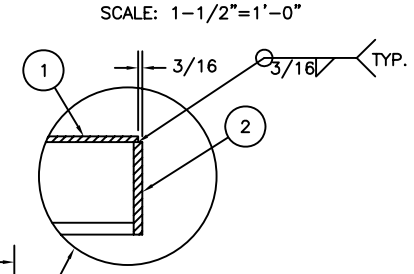

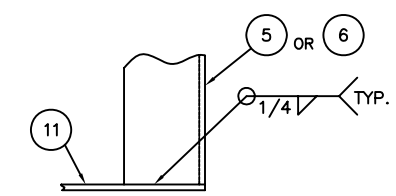

SECTION G–G
SCALE: 1–1/2"=1'–0"

REV.	DATE	APPR.	DESCRIPTION	BY

DESIGNED:
DRAWN: S.M.
TRACED:
CHECKED:
REVIEWED BY: Sean McEvoy, PROJECT ENGINEER
REVIEWED BY: Dianna Bo, CG–432B
REVIEWED BY: S.D. Walker, CG–432
APPROVED: S.D. Walker, CHIEF, OFFICE OF CIVIL ENGINEERING
DATE: 12/11/07

U.S. COAST GUARD HEADQUARTERS
OCEAN ENGINEERING
2007 TYPE
8x22 LFR BUOY

UNLESS OTHERWISE SPECIFIED:
ALL DIMENSIONS ARE IN INCHES.
TOLERANCES: DIM. ±1/32
ANG. ±1°

DRAWING NUMBER: 121185
REV.
SCALE: AS NOTED
SHEET 3 OF 13

PLOTTING SCALE: 1–1/2"=1'–0"

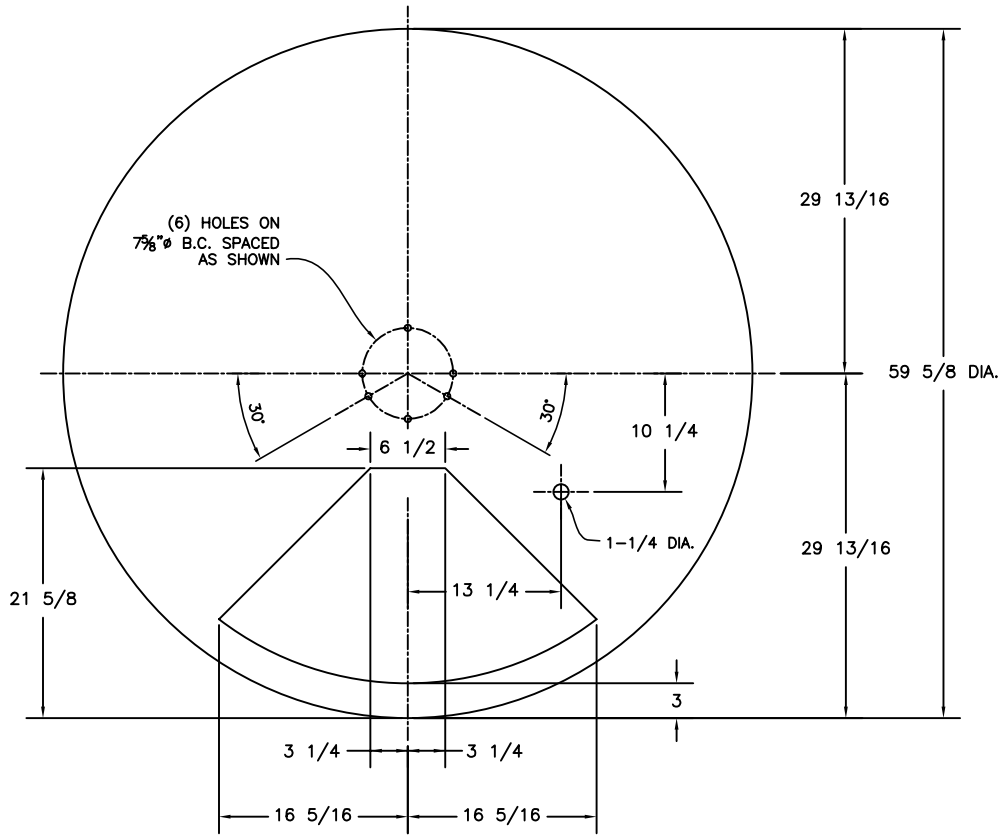

1 TOP PLATE

SCALE: 1-1/2"=1'-0"

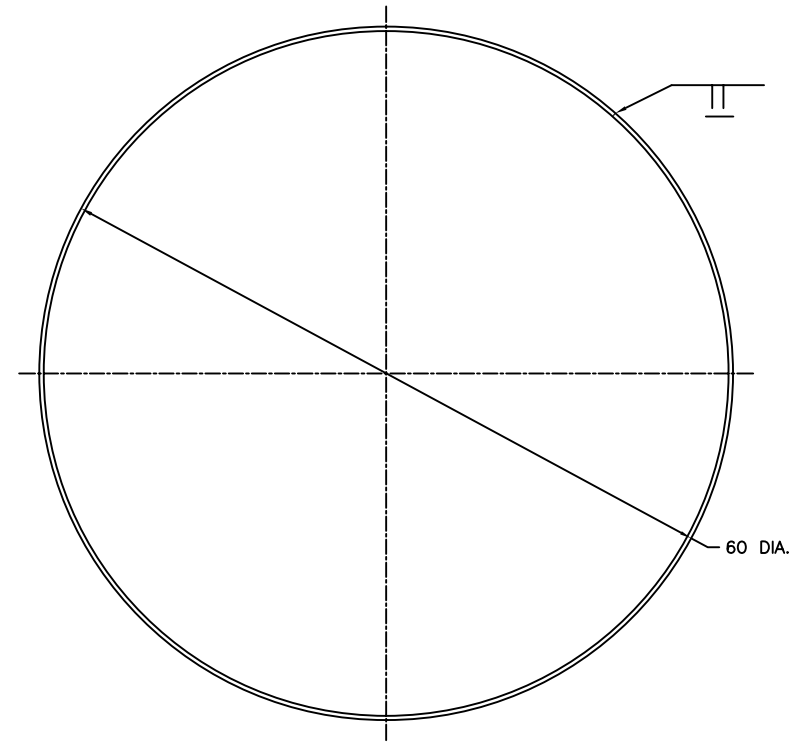

2 UPPER RING

SCALE: 1-1/2"=1'-0"

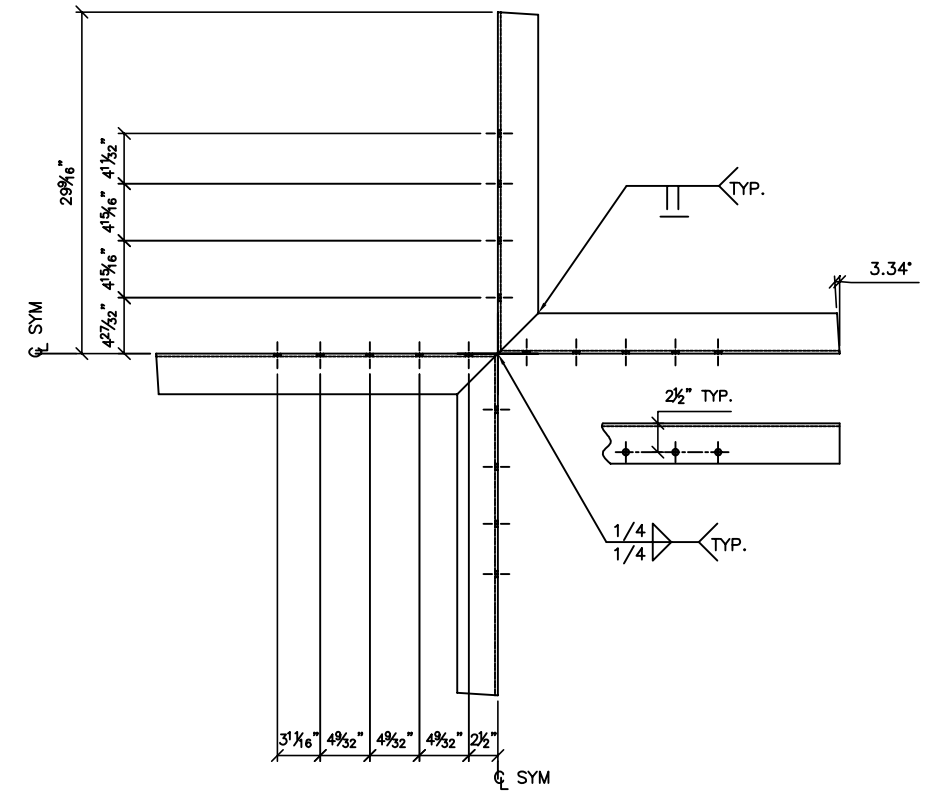

4 UPPER BACKING ANGLE

SCALE: 1-1/2"=1'-0"

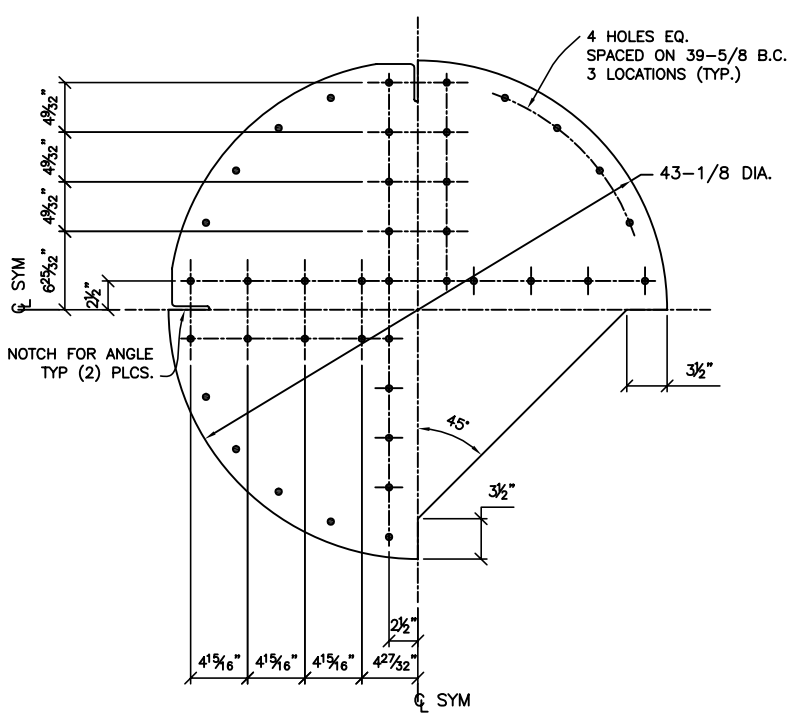

7 MIDDLE PLATE

SCALE: 1-1/2"=1'-0"

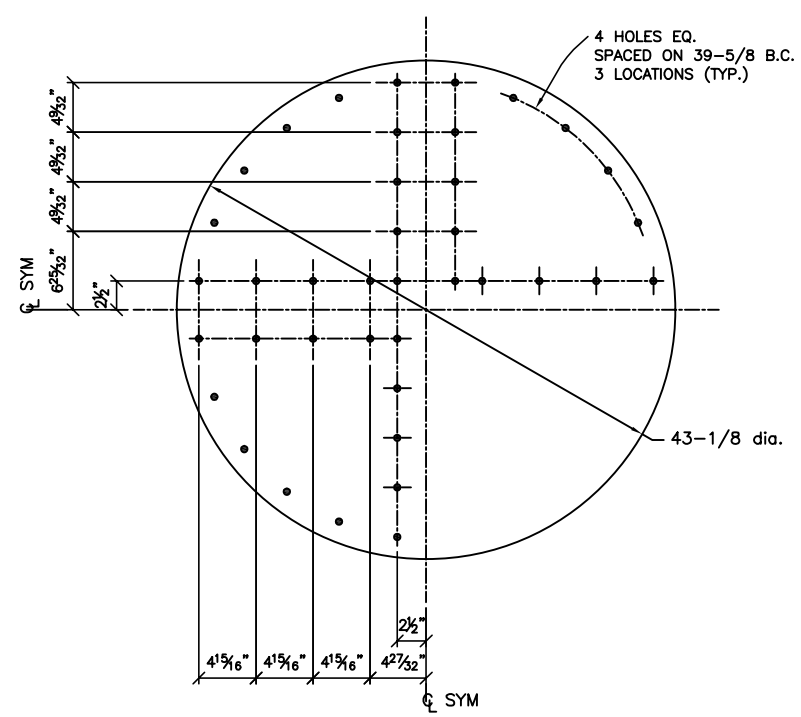

11 BOTTOM PLATE

SCALE: 1-1/2"=1'-0"

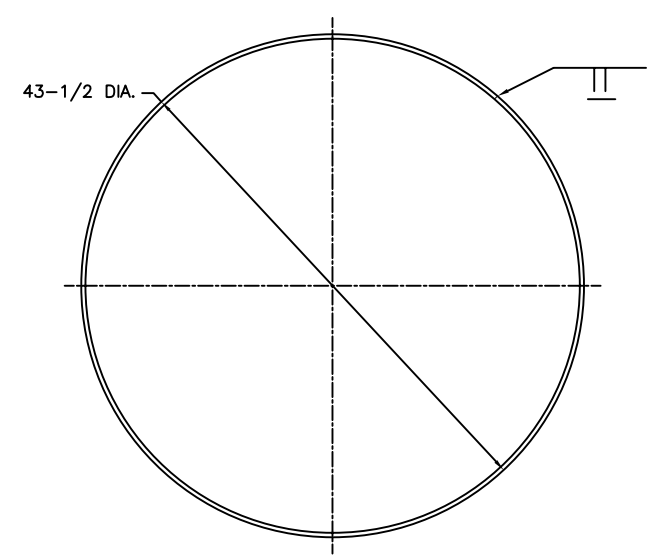

12 LOWER RING

SCALE: 1-1/2"=1'-0"

REV.	DATE	APPR.	DESCRIPTION	BY

DESIGNED:
DRAWN: S.M.
TRACED:
CHECKED:
REVIEWED BY: Sean McEvoy, PROJECT ENGINEER
REVIEWED BY: Dianna Bo, CG-432B
REVIEWED BY: S.D. Walker, CG-432

U.S. COAST GUARD — HEADQUARTERS

OCEAN ENGINEERING

2007 TYPE
8x22 LFR BUOY

APPROVED: S.D. Walker, CHIEF, OFFICE OF CIVIL ENGINEERING — DATE: 12/11/07

UNLESS OTHERWISE SPECIFIED:
ALL DIMENSIONS ARE IN INCHES.
TOLERANCES: DIM. ±1/32
ANG. ±1°

DRAWING NUMBER: 121185 — REV.

SCALE: AS NOTED — SHEET 4 OF 13

PLOTTING SCALE: 1-1/2"=1'-0"

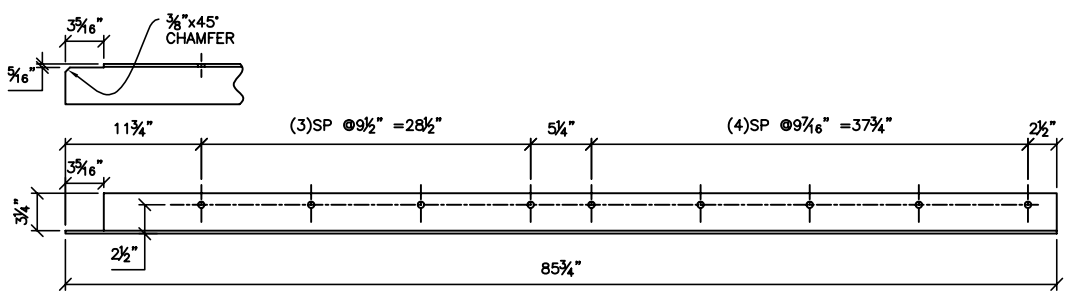

5 UPPER POST
SCALE: 1-1/2"=1'-0"

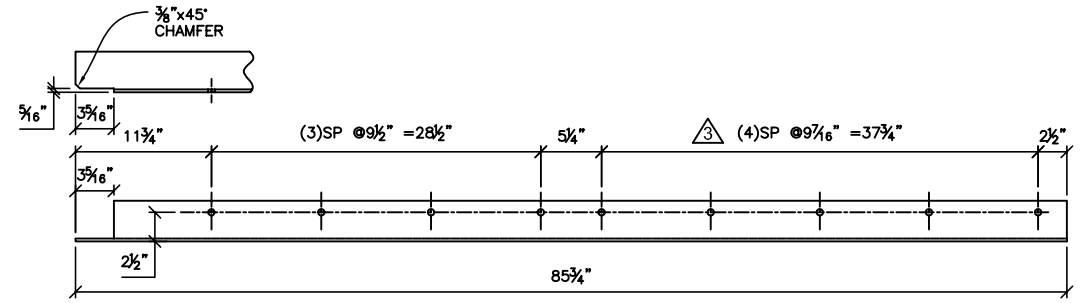

6 UPPER POST
SCALE: 1-1/2"=1'-0"

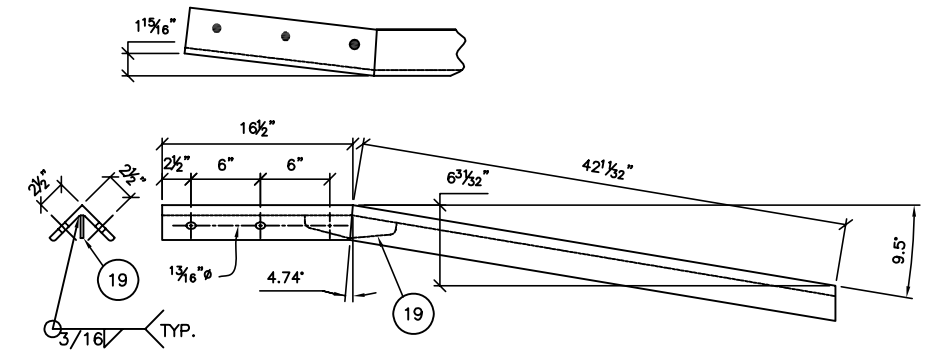

13 TOWER LEG
SCALE: 1-1/2"=1'-0"

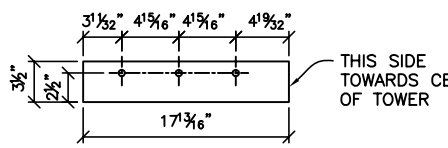

8 BACKING PLATE
SCALE: 1-1/2"=1'-0"

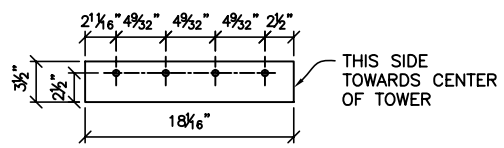

9 BACKING PLATE
SCALE: 1-1/2"=1'-0"

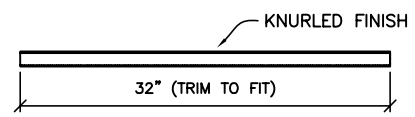

9 UPPER LADDER RUNG
SCALE: 1-1/2"=1'-0"

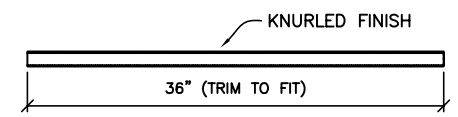

10 LOWER LADDER RUNG
SCALE: 1-1/2"=1'-0"

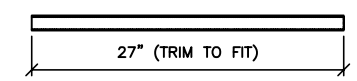

14 LOWER LADDER SUPPORT
SCALE: 1-1/2"=1'-0"

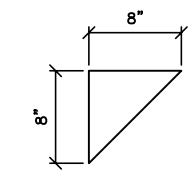

3 UPPER GUSSET
SCALE: 1-1/2"=1'-0"

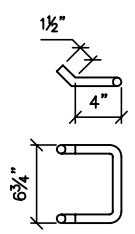

20 TOWER HANDLE
SCALE: 1-1/2"=1'-0"

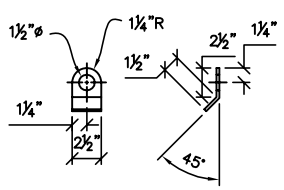

20 CLEVIS
SCALE: 1-1/2"=1'-0"

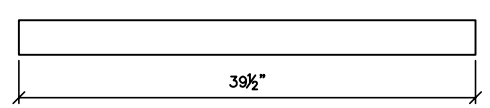

16 X-BRACE
SCALE: 1-1/2"=1'-0"

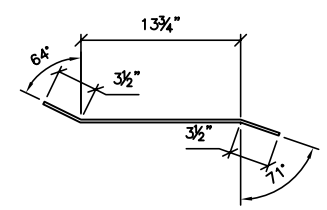

17 BRACE
SCALE: 1-1/2"=1'-0"

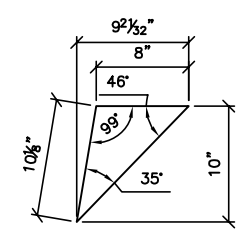

18 LOWER GUSSET
SCALE: 1-1/2"=1'-0"

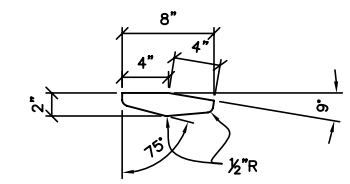

19 TOWER LEG GUSSET
SCALE: 1-1/2"=1'-0"

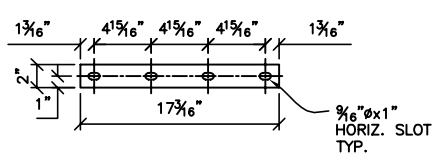

22 WASHER PLATE
SCALE: 1-1/2"=1'-0"

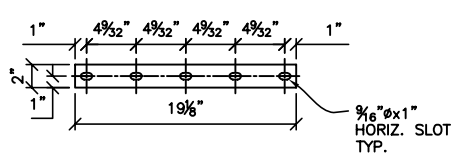

23 WASHER PLATE
SCALE: 1-1/2"=1'-0"

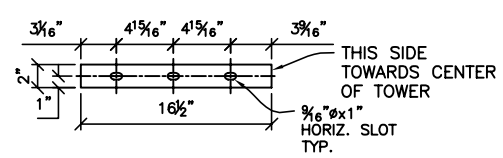

24 WASHER PLATE
SCALE: 1-1/2"=1'-0"

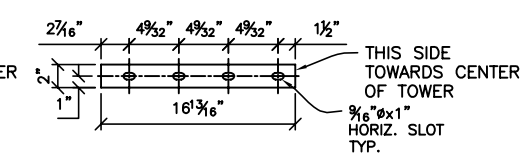

25 WASHER PLATE
SCALE: 1-1/2"=1'-0"

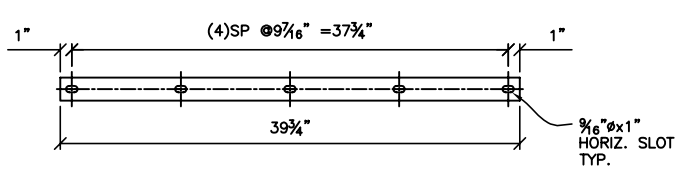

26 WASHER PLATE
SCALE: 1-1/2"=1'-0"

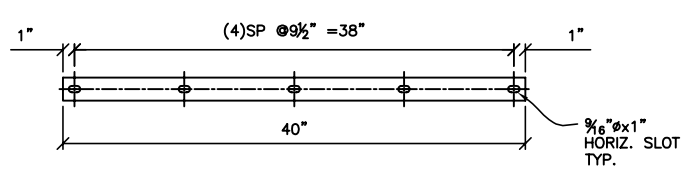

27 WASHER PLATE
SCALE: 1-1/2"=1'-0"

REV.	DATE	APPR.	DESCRIPTION	BY

DESIGNED:
DRAWN: S.M.
TRACED:
CHECKED:
REVIEWED BY: Sean McEvoy, PROJECT ENGINEER
REVIEWED BY: Dianna Bo, CG-432B
REVIEWED BY: S.D. Walker, CG-432

U.S. COAST GUARD — HEADQUARTERS
OCEAN ENGINEERING

2007 TYPE
8x22 LFR BUOY

APPROVED: S.D. Walker, acting
CHIEF, OFFICE OF CIVIL ENGINEERING
DATE: 12/11/07

UNLESS OTHERWISE SPECIFIED:
ALL DIMENSIONS ARE IN INCHES.
TOLERANCES: DIM. ±1/32
ANG. ±1°

DRAWING NUMBER: 121185
REV.
SCALE: AS NOTED
SHEET 5 OF 13

PLOTTING SCALE: 1-1/2"=1'-0"

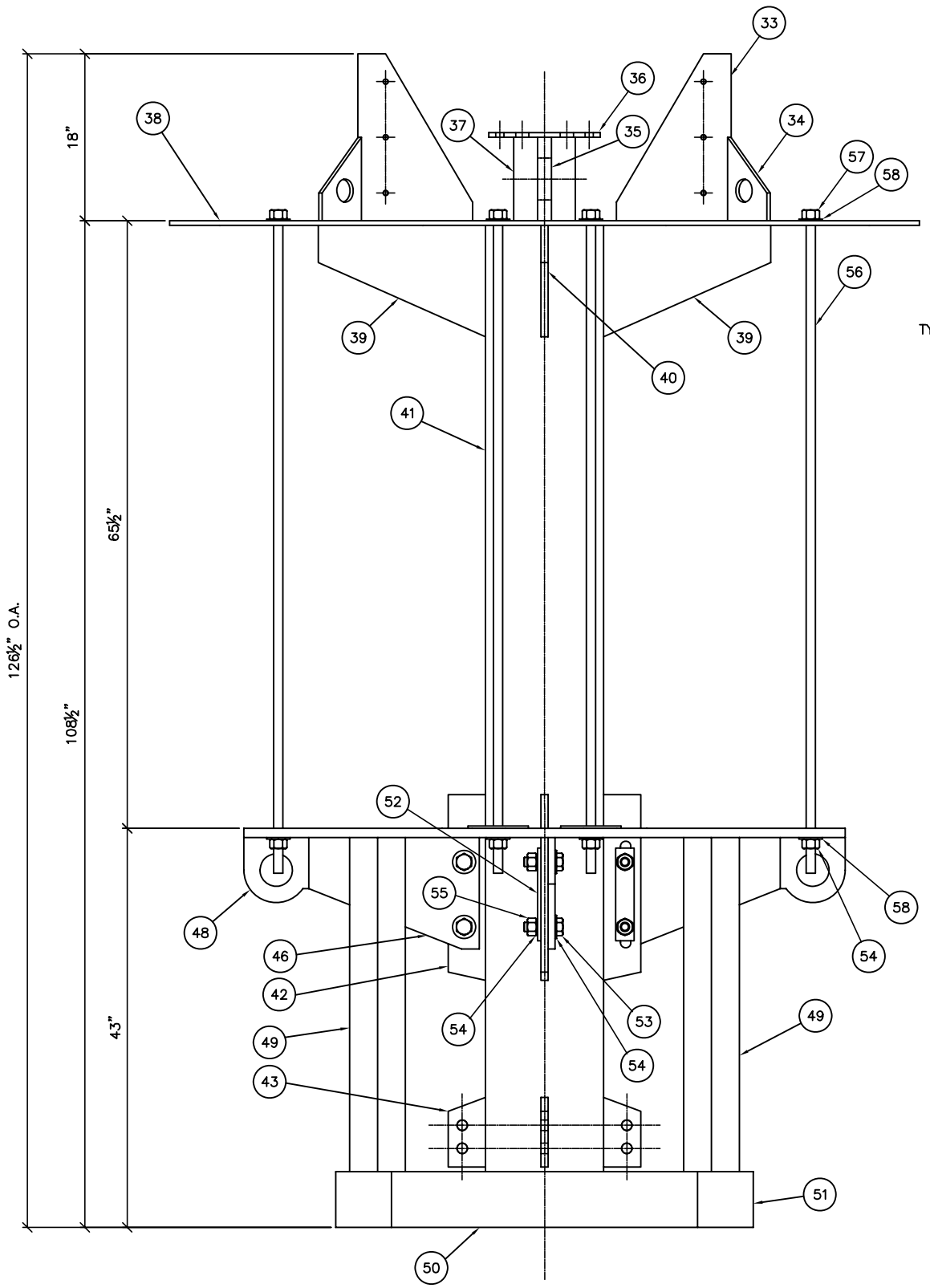

BASE ASSEMBLY

SCALE: 1-1/2"=1'-0"

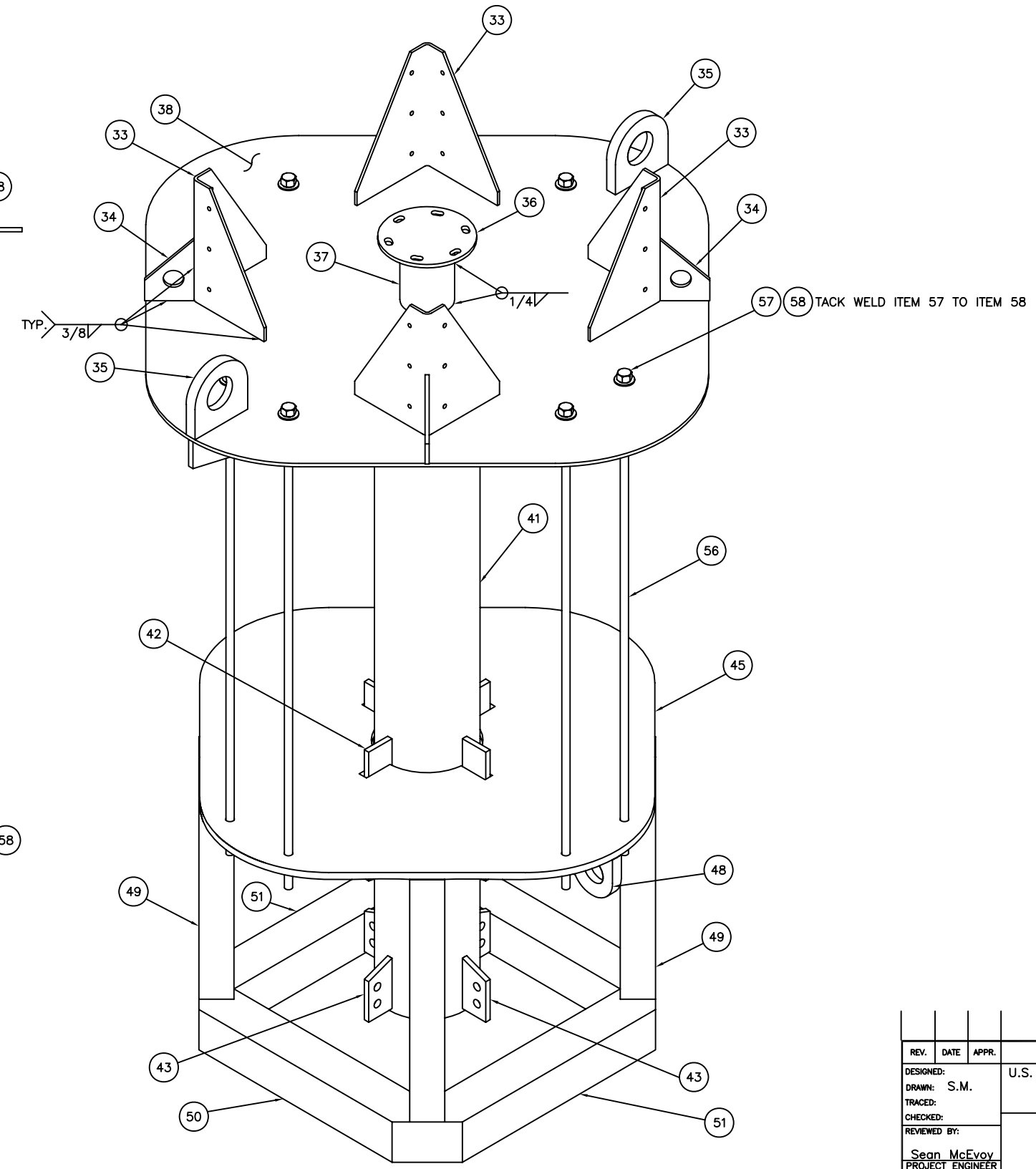

ISOMETRIC

SCALE: NONE

REV.	DATE	APPR.	DESCRIPTION	BY

DESIGNED:
DRAWN: S.M.
TRACED:
CHECKED:
REVIEWED BY: Sean McEvoy, PROJECT ENGINEER
REVIEWED BY: Dianna Bo, CG-432B
REVIEWED BY: S.D. Walker, CG-432

U.S. COAST GUARD HEADQUARTERS

OCEAN ENGINEERING

2007 TYPE
8x22 LFR BUOY

APPROVED: S.D. Walker, acting
CHIEF, OFFICE OF CIVIL ENGINEERING

DATE 12/11/07

UNLESS OTHERWISE SPECIFIED:
ALL DIMENSIONS ARE IN INCHES.
TOLERANCES: DIM. ±1/32
ANG. ±1°

DRAWING NUMBER 121185 REV.

SCALE: AS NOTED SHEET 6 OF 13

PLOTTING SCALE: 1-1/2"=1'-0"

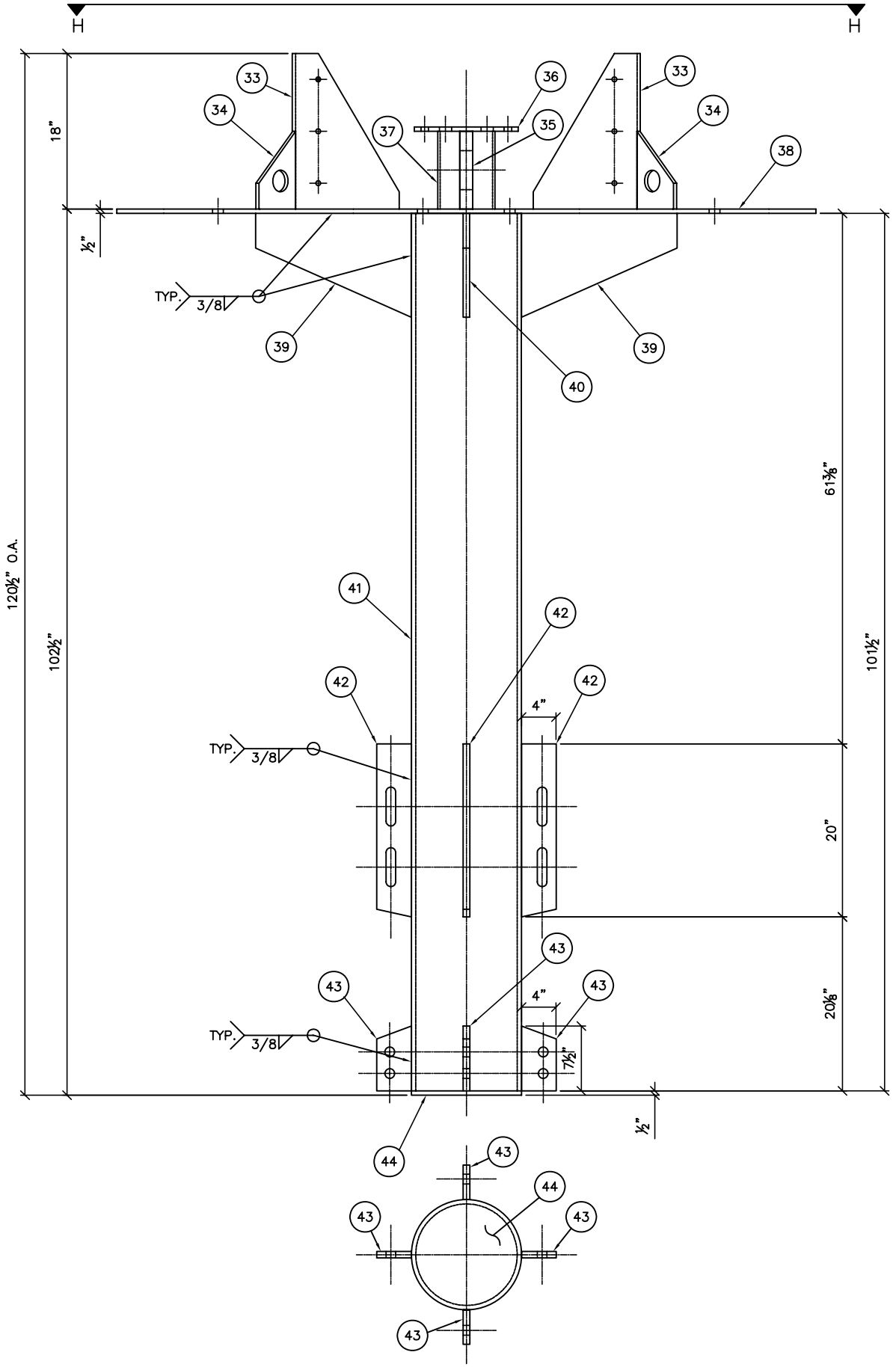

CENTER PIPE ASSEMBLY

SCALE: 1-1/2"=1'-0"

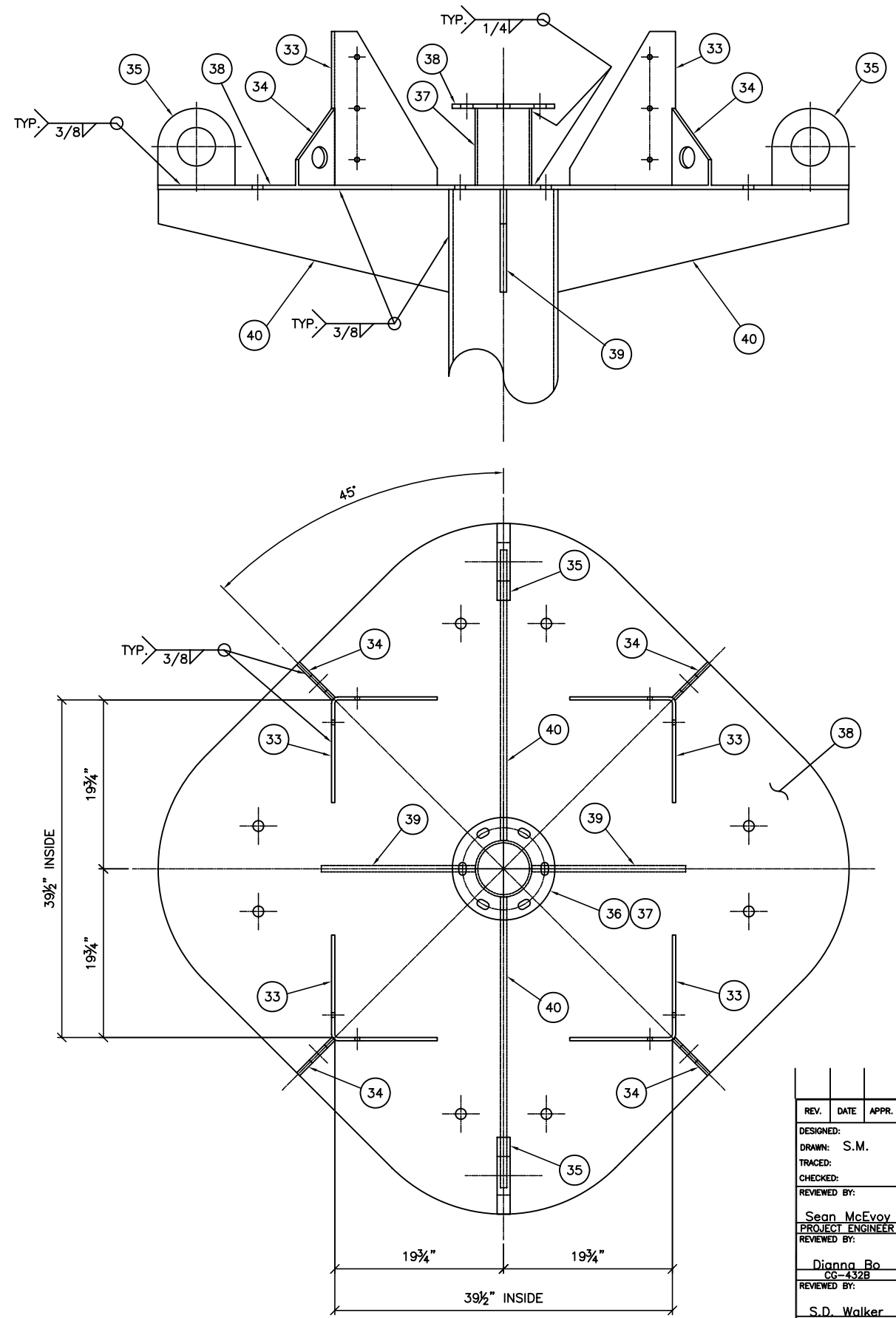

DECK PLATE ASSEMBLY

SCALE: 1-1/2"=1'-0"

REV.	DATE	APPR.	DESCRIPTION	BY

DESIGNED:
DRAWN: S.M.
TRACED:
CHECKED:
REVIEWED BY: Sean McEvoy, PROJECT ENGINEER
REVIEWED BY: Dianna Bo, CG-432B
REVIEWED BY: S.D. Walker, CG-432

U.S. COAST GUARD — HEADQUARTERS
OCEAN ENGINEERING

2007 TYPE
8x22 LFR BUOY

APPROVED: S.D. Walker, acting — CHIEF, OFFICE OF CIVIL ENGINEERING
DATE: 12/11/07

UNLESS OTHERWISE SPECIFIED:
ALL DIMENSIONS ARE IN INCHES.
TOLERANCES: DIM. ±1/32
ANG. ±1°

DRAWING NUMBER: 121185
REV.
SCALE: AS NOTED
SHEET 7 OF 13

PLOTTING SCALE: 1-1/2"=1'-0"

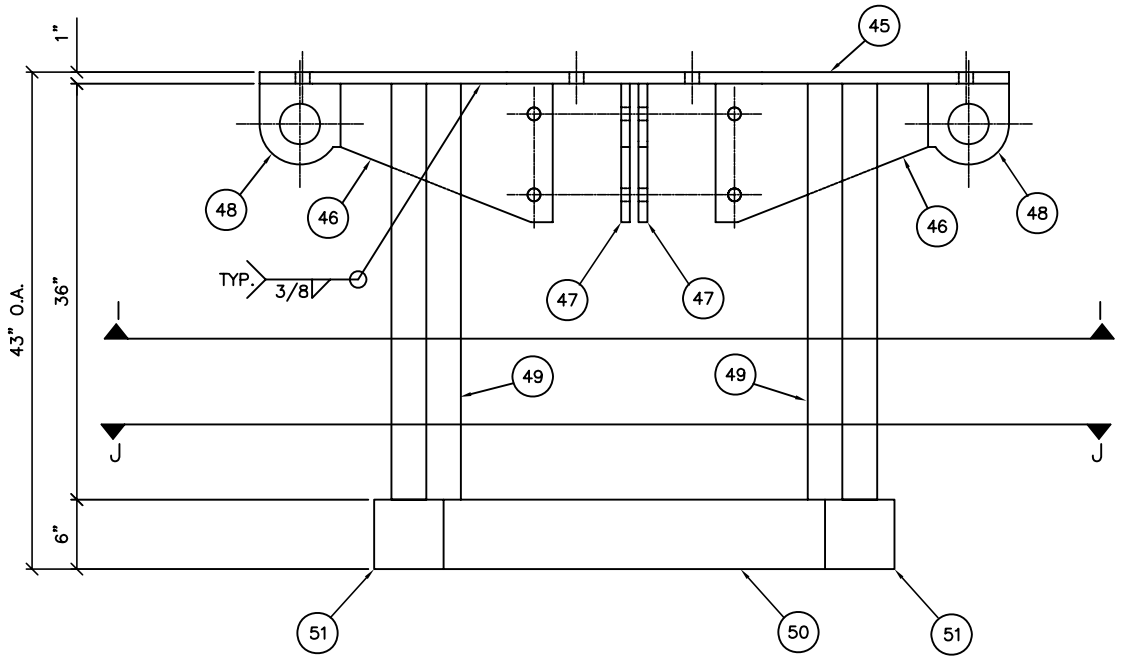

BALLAST ASSEMBLY

SCALE: 1-1/2"=1'-0"

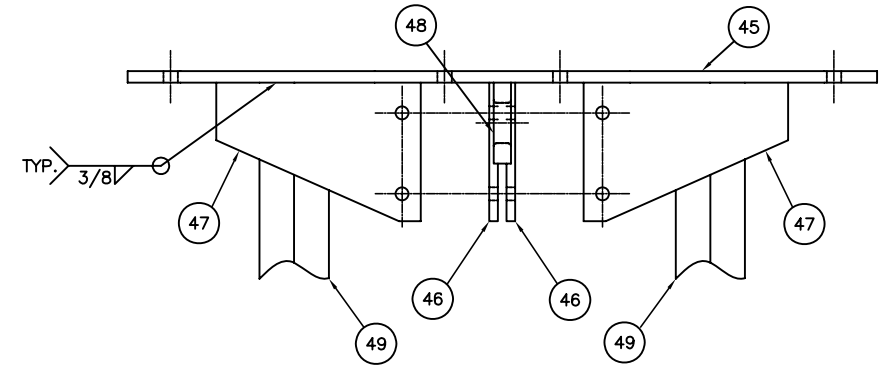

BALLAST ASSEMBLY

SCALE: 1-1/2"=1'-0"

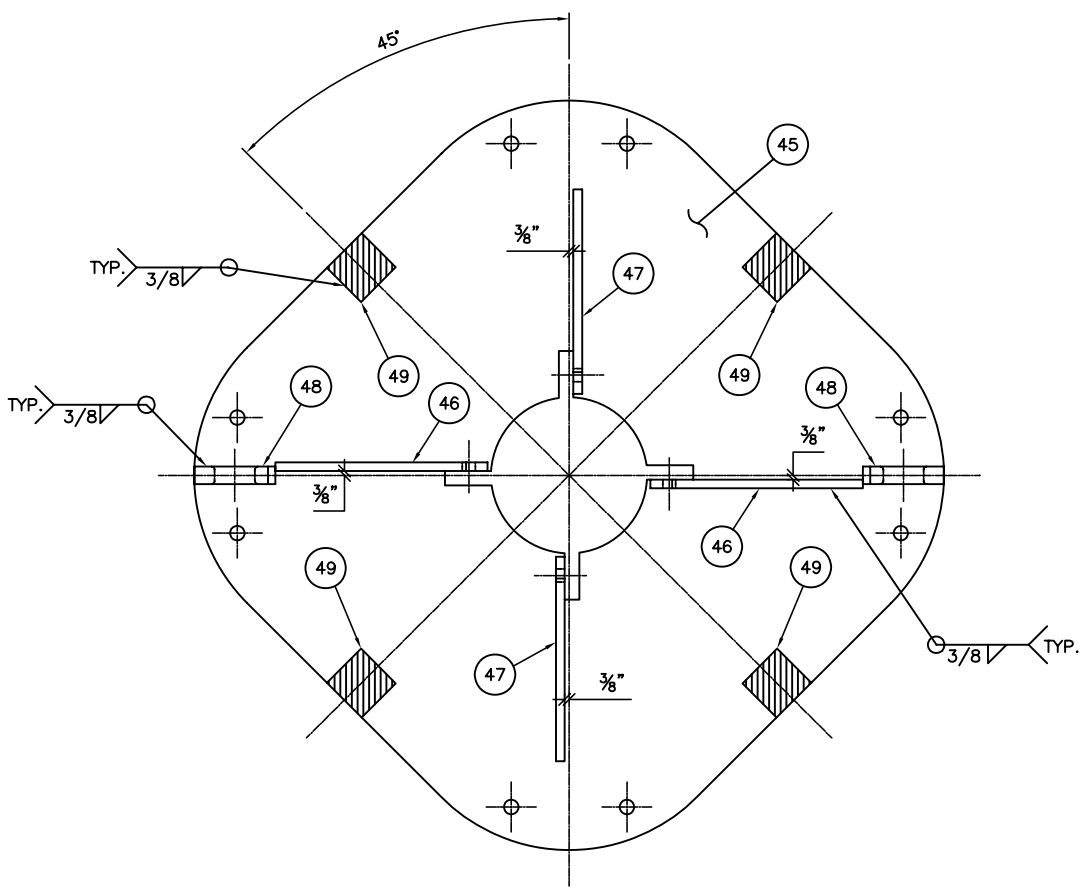

SECTION I-I

SCALE: 1-1/2"=1'-0"

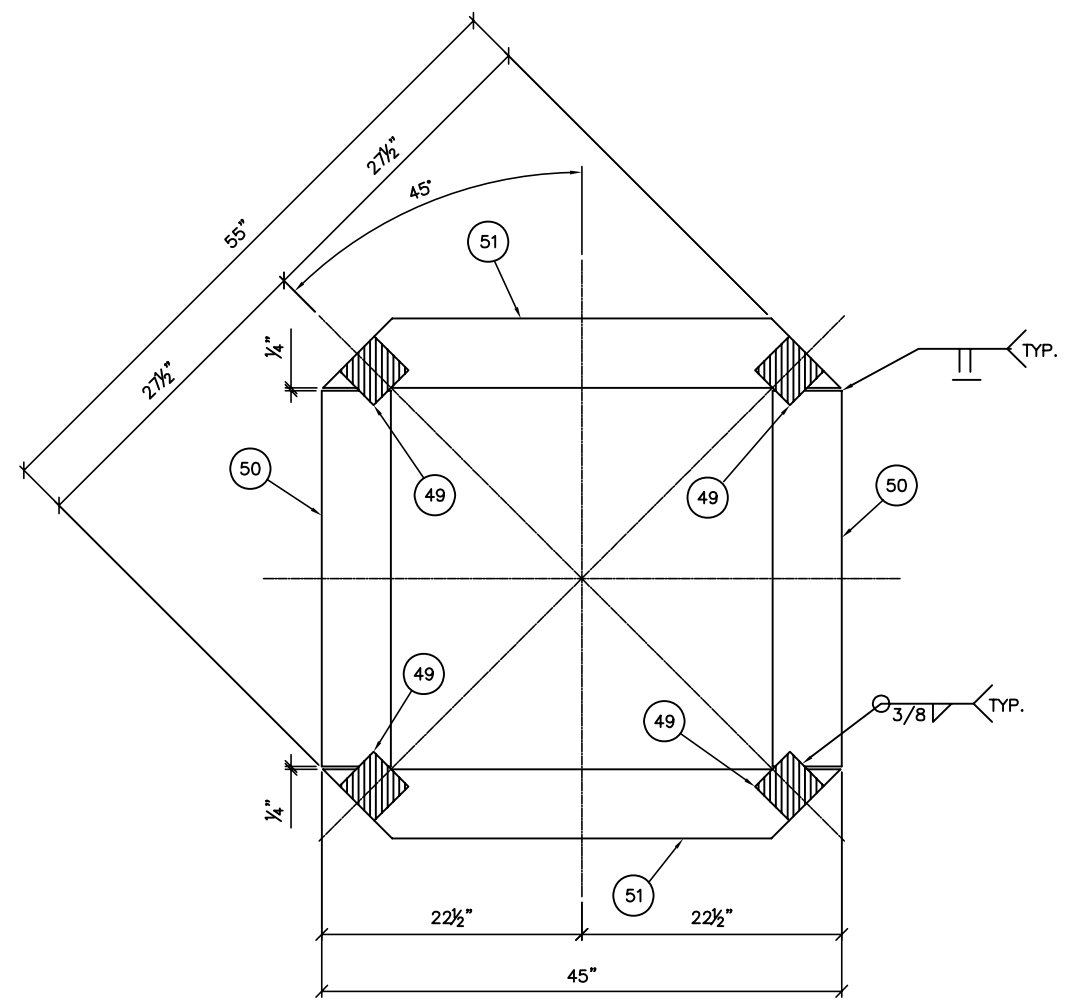

SECTION J-J

SCALE: 1-1/2"=1'-0"

REV.	DATE	APPR.	DESCRIPTION	BY

DESIGNED:
DRAWN: S.M.
TRACED:
CHECKED:
REVIEWED BY: Sean McEvoy, PROJECT ENGINEER
REVIEWED BY: Dianna Bo, CG-432B
REVIEWED BY: S.D. Walker, CG-432

U.S. COAST GUARD — HEADQUARTERS

OCEAN ENGINEERING

2007 TYPE
8x22 LFR BUOY

APPROVED: S.D. Walker, acting
CHIEF, OFFICE OF CIVIL ENGINEERING

DATE: 12/11/07

UNLESS OTHERWISE SPECIFIED:
ALL DIMENSIONS ARE IN INCHES.
TOLERANCES: DIM. ±1/32
ANG. ±1°

DRAWING NUMBER: 121185
REV.

SCALE: AS NOTED
SHEET 8 OF 13

PLOTTING SCALE: 1-1/2"=1'-0"

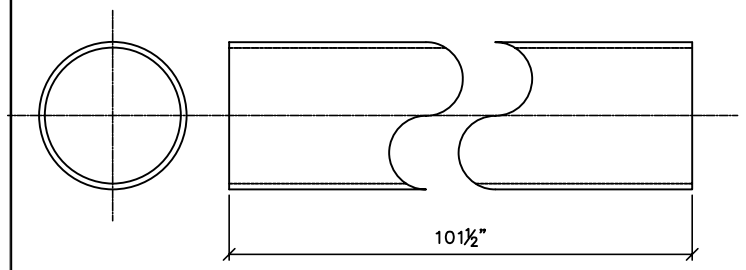

(41) CENTER PIPE
SCALE: 1-1/2"=1'-0"

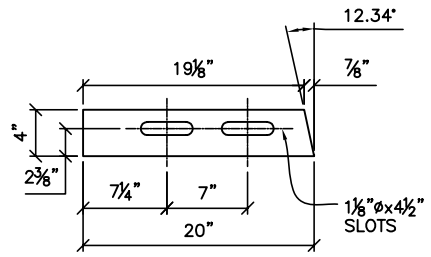

(42) UPPER TAB
SCALE: 1-1/2"=1'-0"

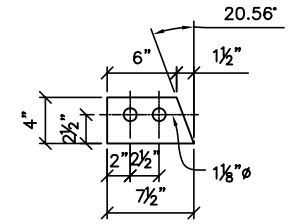

(43) LOWER TAB
SCALE: 1-1/2"=1'-0"

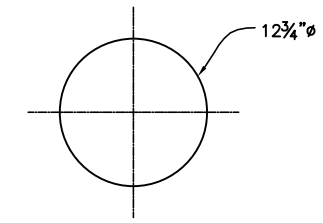

(44) END PLATE
SCALE: 1-1/2"=1'-0"

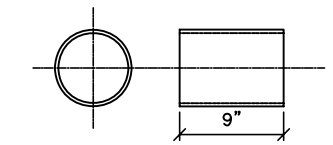

(37) SUPPORT PIPE
SCALE: 1-1/2"=1'-0"

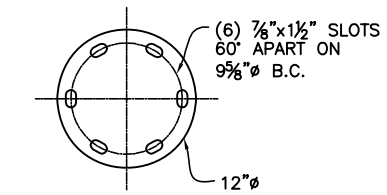

(36) MOUNTING FLANGE
SCALE: 1-1/2"=1'-0"

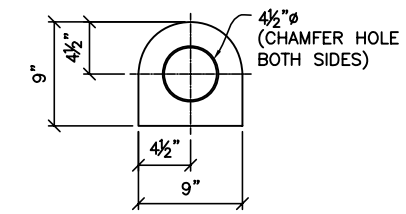

(35) LIFTING BAIL
SCALE: 1-1/2"=1'-0"

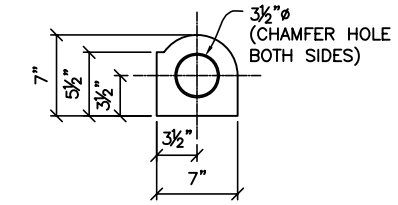

(48) MOORING BAIL
SCALE: 1-1/2"=1'-0"

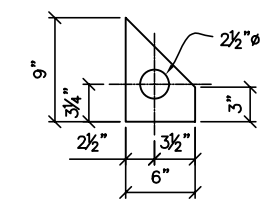

(34) GUSSET PLATE
SCALE: 1-1/2"=1'-0"

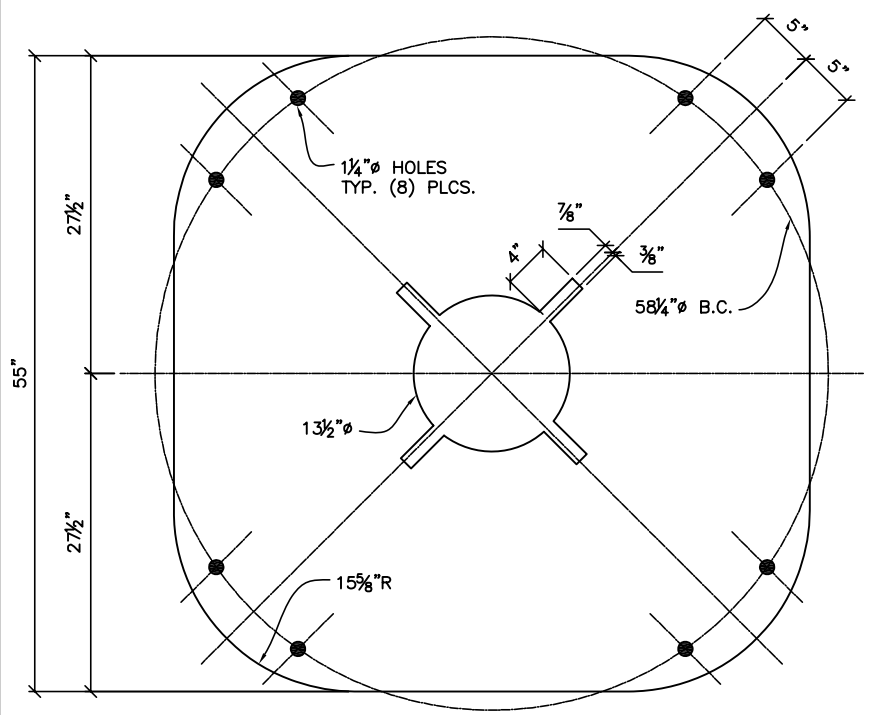

(44) BOTTOM PLATE
SCALE: 1-1/2"=1'-0"

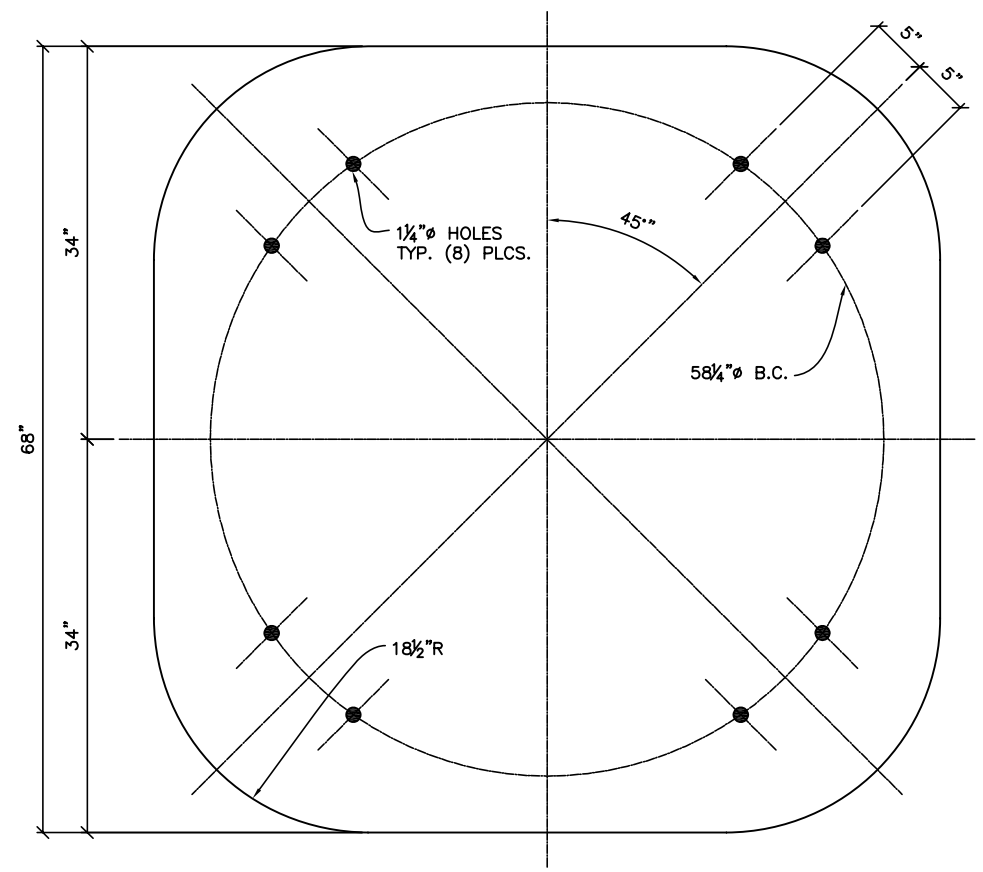

(38) TOP PLATE
SCALE: 1-1/2"=1'-0"

REV.	DATE	APPR.	DESCRIPTION	BY

DESIGNED:
DRAWN: S.M.
TRACED:
CHECKED:
REVIEWED BY: Sean McEvoy, PROJECT ENGINEER
REVIEWED BY: Dianna Bo, CG-432B
REVIEWED BY: S.D. Walker, CG-432

U.S. COAST GUARD HEADQUARTERS
OCEAN ENGINEERING

2007 TYPE
8x22 LFR BUOY

APPROVED: S.D. Walker, acting
CHIEF, OFFICE OF CIVIL ENGINEERING
DATE: 12/11/07

UNLESS OTHERWISE SPECIFIED:
ALL DIMENSIONS ARE IN INCHES.
TOLERANCES: DIM. ±1/32
ANG. ±1°

DRAWING NUMBER: 121185
REV.
SCALE: AS NOTED
SHEET 9 OF 13

PLOTTING SCALE: 1-1/2"=1'-0"

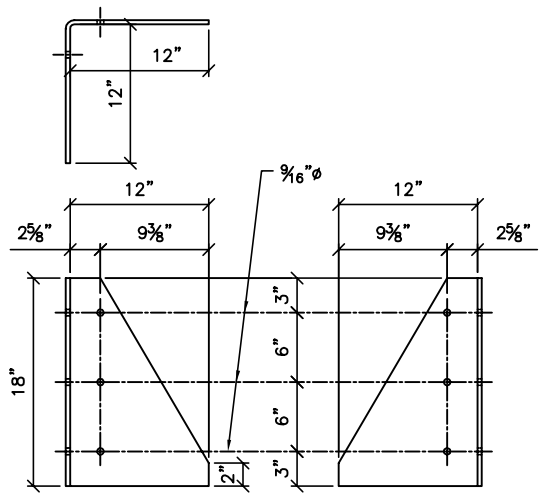

(33) TOWER FOOT

SCALE: 1-1/2"=1'-0"

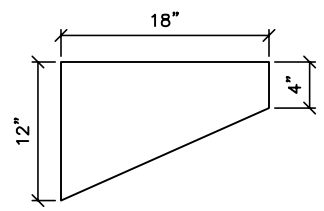

(39) DECK PLATE GUSSET

SCALE: 1-1/2"=1'-0"

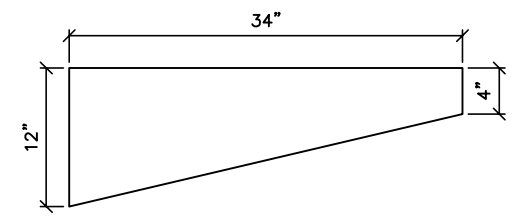

(40) DECK PLATE GUSSET

SCALE: 1-1/2"=1'-0"

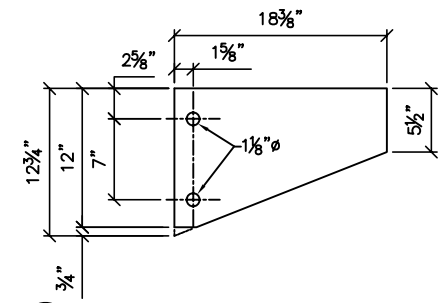

(46) BOTTOM PLATE GUSSET

SCALE: 1-1/2"=1'-0"

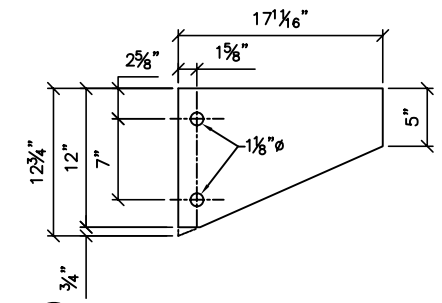

(47) BOTTOM PLATE GUSSET

SCALE: 1-1/2"=1'-0"

(49) BALLAST LEG

SCALE: 1-1/2"=1'-0"

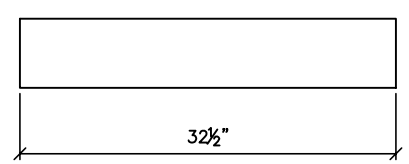

(50) BALLAST BASE

SCALE: 1-1/2"=1'-0"

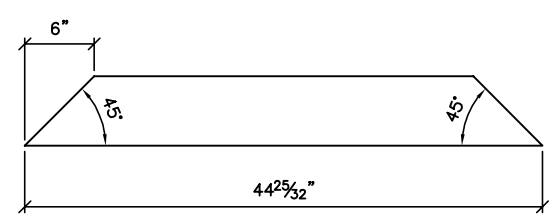

(51) BALLAST BASE

SCALE: 1-1/2"=1'-0"

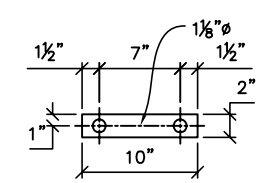

(52) PLATE WASHER

SCALE: 1-1/2"=1'-0"

REV.	DATE	APPR.	DESCRIPTION	BY

DESIGNED:
DRAWN: S.M.
TRACED:
CHECKED:
REVIEWED BY: Sean McEvoy, PROJECT ENGINEER
REVIEWED BY: Dianna Bo, CG-432B
REVIEWED BY: S.D. Walker, CG-432

U.S. COAST GUARD HEADQUARTERS

OCEAN ENGINEERING

2007 TYPE
8x22 LFR BUOY

APPROVED: S.D. Walker, acting
CHIEF, OFFICE OF CIVIL ENGINEERING

DATE: 12/11/07

UNLESS OTHERWISE SPECIFIED:
ALL DIMENSIONS ARE IN INCHES.
TOLERANCES: DIM. ±1/32
ANG. ±1°

DRAWING NUMBER: 121185
REV.

SCALE: AS NOTED
SHEET 10 OF 13

PLOTTING SCALE: 1-1/2"=1'-0"

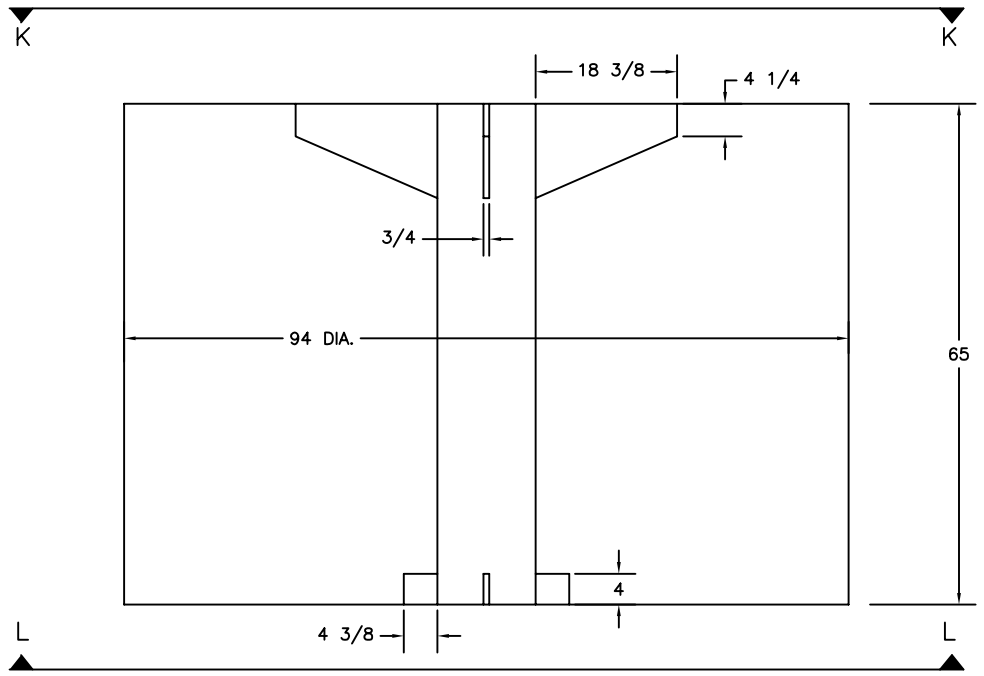

60 BUOY HULL

SCALE: 1"=1'-0"

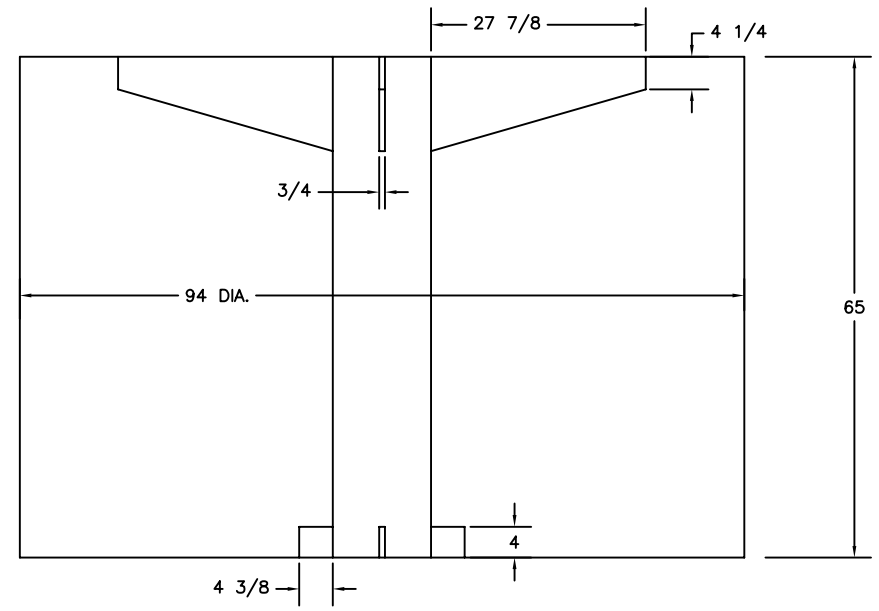

SECTION M-M

SCALE: 1"=1'-0"

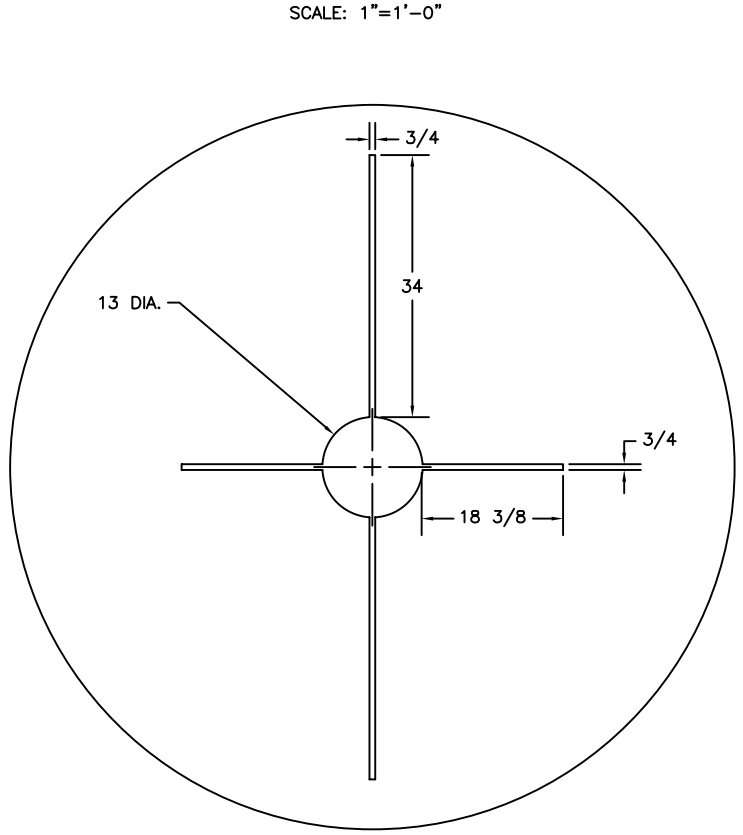

SECTION K-K

SCALE: 1"=1'-0"

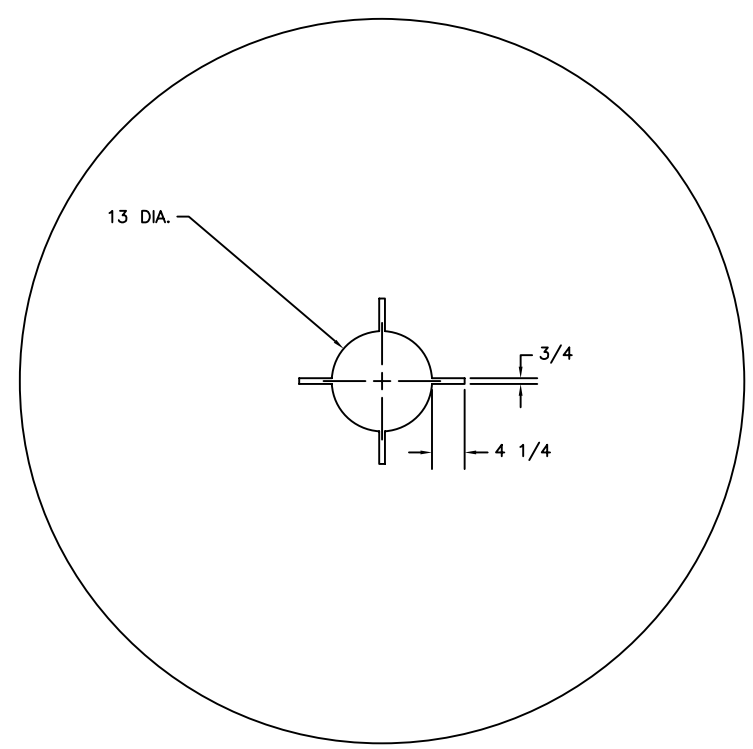

SECTION L-L

SCALE: 1"=1'-0"

REV.	DATE	APPR.	DESCRIPTION	BY

DESIGNED:
DRAWN: S.M.
TRACED:
CHECKED:
REVIEWED BY: Sean McEvoy, PROJECT ENGINEER
REVIEWED BY: Dianna Bo, CG-432B
REVIEWED BY: S.D. Walker, CG-432

U.S. COAST GUARD — HEADQUARTERS
OCEAN ENGINEERING

2007 TYPE
8x22 LFR BUOY

APPROVED: S.D. Walker, acting
CHIEF, OFFICE OF CIVIL ENGINEERING
DATE: 12/11/07

UNLESS OTHERWISE SPECIFIED:
ALL DIMENSIONS ARE IN INCHES.
TOLERANCES: DIM. ±1/32
ANG. ±1°

DRAWING NUMBER: 121185
REV.
SCALE: AS NOTED
SHEET 11 OF 13

PLOTTING SCALE: 1"=1'-0"

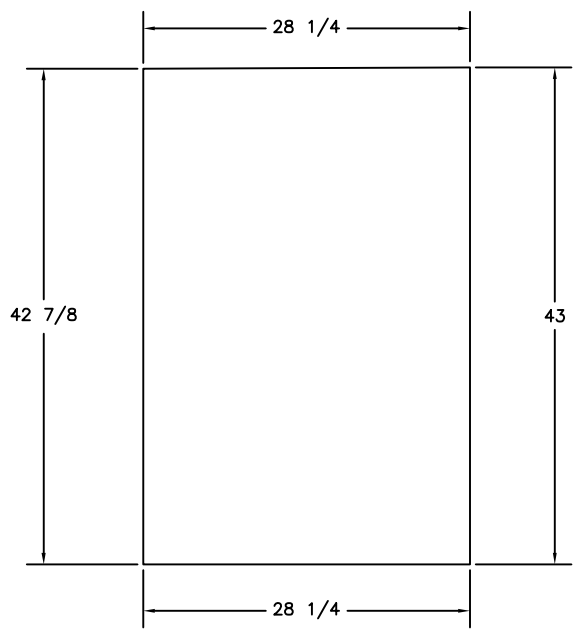

(61) UPPER RADAR PANEL

SCALE: 1-1/2"=1'-0"

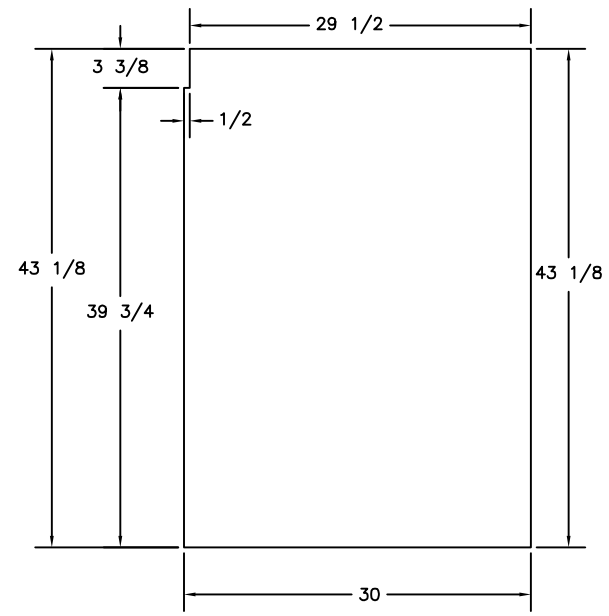

(63) LOWER RADAR PANEL

SCALE: 1-1/2"=1'-0"

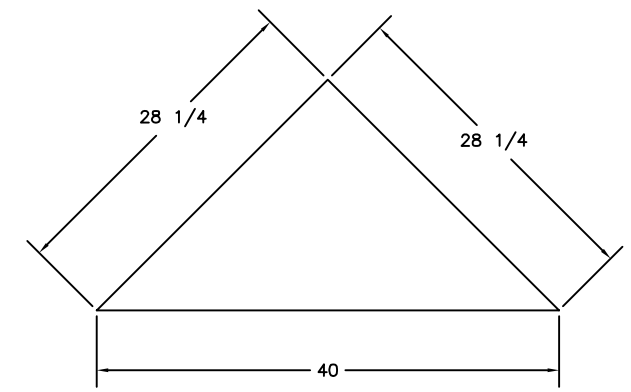

(65) HORIZONTAL RADAR PANEL

SCALE: 1-1/2"=1'-0"

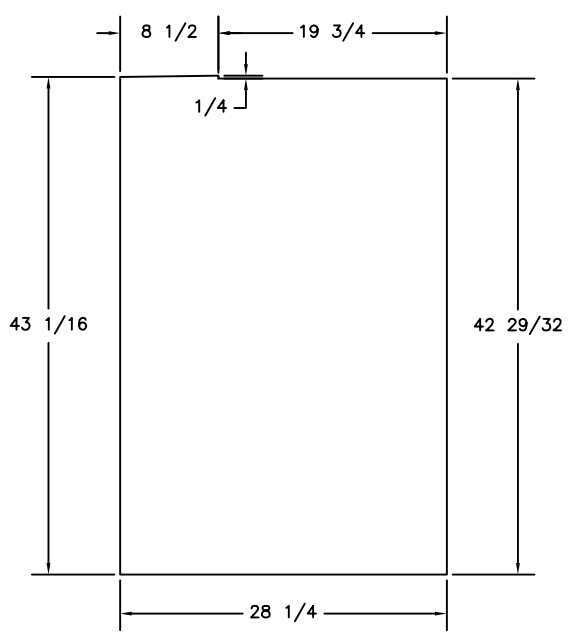

(62) UPPER RADAR PANEL

SCALE: 1-1/2"=1'-0"

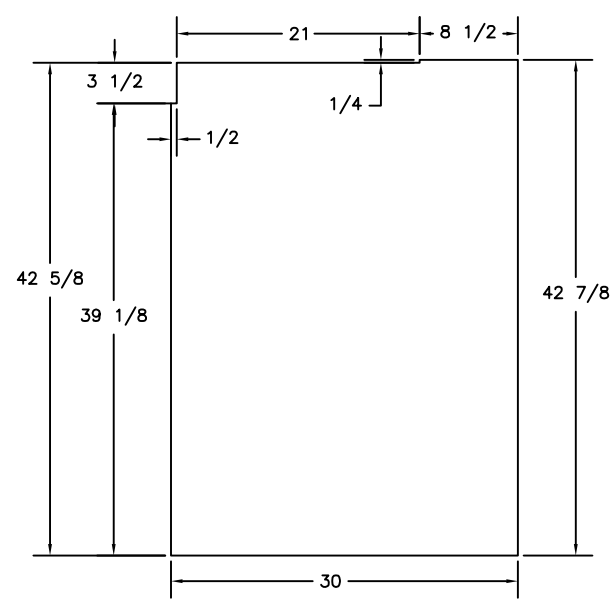

(64) LOWER RADAR PANEL

SCALE: 1-1/2"=1'-0"

REV.	DATE	APPR.	DESCRIPTION	BY

DESIGNED:
DRAWN: S.M.
TRACED:
CHECKED:
REVIEWED BY: Sean McEvoy
PROJECT ENGINEER
REVIEWED BY: Dianna Bo
CG-432B
REVIEWED BY: S.D. Walker
CG-432

U.S. COAST GUARD HEADQUARTERS

CIVIL ENGINEERING

2007 TYPE
8x22 LFR BUOY

APPROVED: S.D. Walker, acting
CHIEF, OFFICE OF CIVIL ENGINEERING

DATE 12/11/07

UNLESS OTHERWISE SPECIFIED:
ALL DIMENSIONS ARE IN INCHES.
TOLERANCES: DIM. ±1/32
ANG. ±1°

DRAWING NUMBER 121185 REV.

SCALE: AS NOTED SHEET 12 OF 13

PLOTTING SCALE: 1-1/2"=1'-0"

BILL OF MATERIALS

ITEM NO.	NO. REQ.	DESCRIPTION	MATL.	REMARKS
1	1	TOP PLATE	ALUM.	59-5/8 DIA. x 1/4 THK.
2	1	UPPER RING	ALUM.	60 DIA. x 4 x 1/4 THK.
3	4	UPPER GUSSET	ALUM.	8 x 8 x 1/4 THK.
4	4	UPPER BACKING ANGLE	ALUM.	3-1/2 x 3-1/2 x 1/4 L
5	2	UPPER POST	ALUM.	3-1/2 x 3-1/2 x 1/4 L
6	2	UPPER POST	ALUM.	3-1/2 x 3-1/2 x 1/4 L
7	1	MIDDLE PLATE	ALUM.	43-1/8 DIA. x 1/4 THK.
8	6	BACKING PLATE	ALUM.	17-13/16 x 3-1/2 x 1/4 THK.
9	6	BACKING PLATE	ALUMN.	18-1/16 x 3-1/2 x 1/4 THK.
10	3	UPPER LADDER RUNG	ALUM.	1 SCH 40 PIPE x 32 LG.
11	1	BOTTOM PLATE	ALUM.	43-1/8 DIA. x 1/4 THK.
12	1	LOWER RING	ALUM.	43-1/2 DIA. x 4 x 3/8 THK.
13	4	TOWER LEGS	ALUM.	4 x 4 x 1/2 L
14	1	LOWER LADDER SUPPORT	ALUM.	1 SCH 40 PIPE x 36 LG.
15	1	LOWER LADDER RUNG	ALUM.	1 SCH 40 PIPE x 36 LG.
16	6	X-BRACE	ALUM.	39-1/2 x 3 x 1/4 THK.
17	3	BRACE	ALUM.	20-3/4 x 3 x 1/4 THK.
18	4	LOWER GUSSET	ALUM.	10 x 9-21/32 x 1/4 THK.
19	4	TOWER LEG GUSSET	ALUM.	8 x 2 x 1/4 THK.
20	6	TOWER HANDLE	ALUM.	3/4 DIA. ROD x 20-3/16 LG
21	8	CLEVIS	ALUM.	4-1/2 x 2-1/2 x 1/4 THK.
22	6	HORIZONTAL WASHER PLATE	ALUM.	17-3/16 x 2" x 1/4 THK.
23	6	HORIZONTAL WASHER PLATE	ALUM.	19-1/8 x 2 x 1/4 THK.
24	8	INTERNAL WASHER PLATE	ALUM.	16-1/2 x 2 x 1/4 THK.
25	8	INTERNAL WASHER PLATE	ALUM.	16-13/16 x 2 x 1/4 THK.
26	4	VERTICAL WASHER PLATE	ALUM.	39-3/4 x 2 x 1/4 THK.
27	4	VERTICAL WASHER PLATE	ALUM.	40 x 2 x 1/4 THK.
28	8	ISOLATOR PAD	POLY	16 x 3-3/4 x 1/8 THK.
29	24	SHOULDER WASHER	TEFLON	1/2 ID x 3/4 OD x 1-1/4 FLANGE
30	24	HEX HEAD BOLT	STAIN. STEEL	1/2 - 13UNC x 2-1/2 LONG
31	48	FLAT WASHER	STAIN. STEEL	1/2 NOM.
32	24	HEX HEAD NUT	STAIN. STEEL	1/2 - 13UNC
33	4	TOWER FOOT	STEEL	3/8 THK.
34	4	GUSSET PLATE	STEEL	9 x 6 x 1/2 THK.
35	2	LIFTING BAIL	STEEL	9 x 9 x 1-1/2 THK.
36	1	MOUNTING FLANGE	STEEL	12 DIA. x 1/2 THK.
37	1	STAND SUPPORT PIPE	STEEL	6 SCH 40 PIPE x 9 LG.
38	1	DECK PLATE	STEEL	68 x 68 x 1/2 THK.
39	2	DECK PLATE GUSSET	STEEL	18 x 12 x 1/2 THK.
40	2	DECK PLATE GUSSET	STEEL	34 x 12 x 1/2 THK.
41	1	CENTER PIPE	STEEL	12 SCH 80 PIPE x 101-1/2 LG.
42	4	UPPER TAB	STEEL	20 x 4 x 3/4 THK.
43	4	LOWER TAB	STEEL	7-1/2 x 4 x 3/4 THK.
44	1	END PLATE	STEEL	12-3/4 DIA. x x 1/2 THK.
45	1	BOTTOM PLATE	STEEL	20 x 4 x 3/4 THK.
46	2	BOTTOM PLATE GUSSET	STEEL	18-3/8 x 12-3/4 x 3/4 THK.
47	2	BOTTOM PLATE GUSSET	STEEL	17-11/16 x 12-3/4 x 3/4 THK.
48	2	MOORING BAIL	STEEL	7 x 7 x 1-1/2 THK.
49	4	BALLAST LEG	STEEL	6 x 6 x 36 LG SOLID STEEL
50	2	BALLAST BASE	STEEL	6 x 6 x 32-1/2 LG SOLID STEEL
51	2	BALLAST BASE	STEEL	6 x 6 x 44-25/32 LG SOLID STEEL
52	4	WASHER PLATE	STEEL	10 x 2 x 3/8 THK.

BILL OF MATERIALS

ITEM NO.	NO. REQ.	DESCRIPTION	MATL.	REMARKS
53	8	HEX HEAD BOLT	STAIN. STEEL	1 - 8UNC x 3-1/2 LG.
54	16	FLAT WASHER	STAIN. STEEL	1-1/16 ID x 1-3/4 OD
55	16	HEX HEAD NYLOCK BOLT	STAIN. STEEL	1 - 8UNC
56	8	THREADED ROD	STAIN. STEEL	1 - 8UNC x 71-1/2 LG.
57	8	HEAVY HEAD HEX NUT	STAIN. STEEL	1 - 8UNC
58	16	FLAT WASHER	STAIN. STEEL	1-1/16 ID x 2-1/2 OD
59	1	BATTERY BOX	STEEL	SEE DRAWING 121100
60	1	BUOY HULL	FOAM	4 PCF SEE NOTE 1
61	2	UPPER RADAR PANEL	FOAM	7/8 TO 1 THK SEE NOTE 3
62	2	UPPER RADAR PANEL	FOAM	7/8 TO 1 THK SEE NOTE 3
63	2	LOWER RADAR PANEL	FOAM	7/8 TO 1 THK SEE NOTE 3
64	2	LOWER RADAR PANEL	FOAM	7/8 TO 1 THK SEE NOTE 3
65	6	HORIZONTAL RADAR PANEL	FOAM	7/8 TO 1 THK SEE NOTE 3
66	186	HEX HEAD BOLT	STAIN. STEEL	1/2 - 13UNC x 2 LG.
67	372	FLAT WASHER	STAIN. STEEL	1/2 NOM.
68	186	HEX HEAD NYLOCK NUT	STAIN. STEEL	1/2 - 13UNC

NOTES:

1. SEE LATEST REVISION OF U.S.C.G. CIVIL ENGINEERING SPECIFICATION No. 450 FOR FABRICATION REQUIREMENTS. DIMENSIONAL TOLERANCES FOR ITEM 60 ARE ±1 FOR THE DIAMETER AND ±1/4 FOR THE HEIGHT.
2. TACK WELD ITEM 56 TO ITEM 57.
3. FOAM RADAR PANELS CONSIST OF AN ALUMINUM FOIL SHEET HEAT SEALED IN BETWEEN TWO FOAM PANELS. THE MOUNTING HOLES IN THE PANELS SHALL BE BACK DRILLED DURING INSTALLATION TO ENSURE PROPER ALIGNMENT.
4. THE HORIZONTAL FOAM RADAR PANELS (ITEM 65) SHALL BE MOUNTED TO ITEMS 7 AND 11 USING ITEMS 66, 67 AND 68.

REV.	DATE	APPR.	DESCRIPTION	BY

DESIGNED:
DRAWN: S.M.
TRACED:
CHECKED:
REVIEWED BY: Sean McEvoy, PROJECT ENGINEER
REVIEWED BY: Dianna Bo, CG-432B
REVIEWED BY: S.D. Walker, CG-432

U.S. COAST GUARD HEADQUARTERS
OCEAN ENGINEERING

2007 TYPE
8x22 LFR BUOY

APPROVED: S.D. Walker, acting
CHIEF, OFFICE OF CIVIL ENGINEERING
DATE: 12/11/07

UNLESS OTHERWISE SPECIFIED:
ALL DIMENSIONS ARE IN INCHES.
TOLERANCES: DIM. ±1/32
ANG. ±1°

DRAWING NUMBER: 121185
REV.
SCALE: AS NOTED
SHEET 13 OF 13

PLOTTING SCALE: 1-1/2"=1'-0"