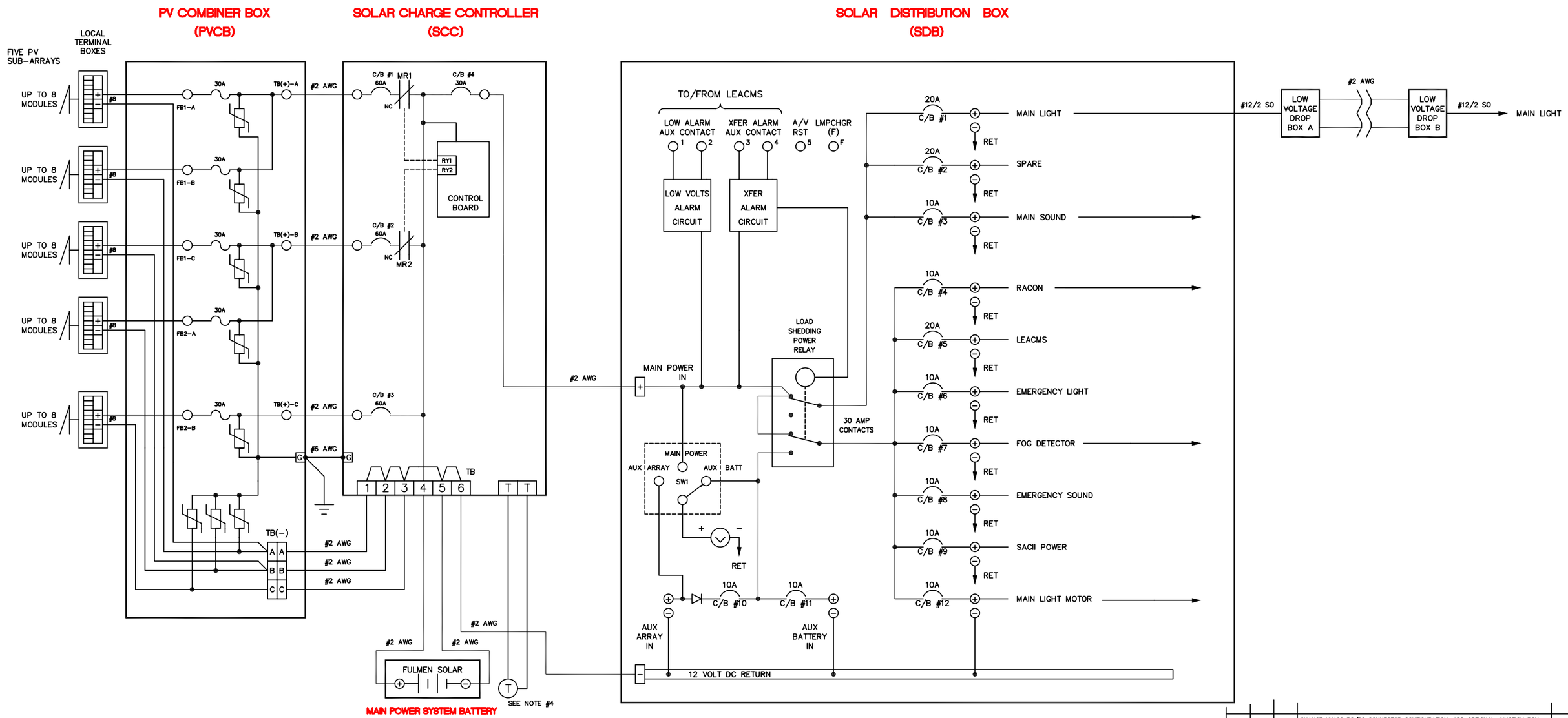

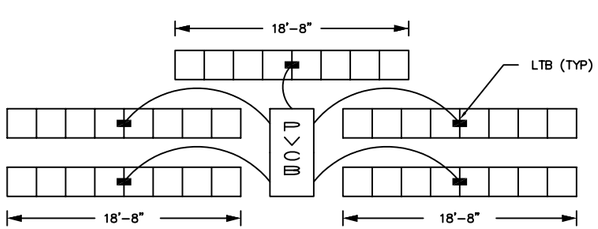

SOLAR PANEL LAYOUT DIAGRAM

NOTES:

1. SEE SHEET 3 FOR WIRE RUNNING LIST, LOAD INTERCONNECTION, AND MATERIALS LIST.
2. REFER TO SHEET 2 FOR LOAD WIRING DETAILS.
3. THIS SYSTEM SHOULD BE TEMPORARILY ASSEMBLED AND TEST-OPERATED SUCCESSFULLY AT THE BASE PRIOR TO TRANSPORTING TO THE AID FOR PERMANENT INSTALLATION.
4. INSTALL CHARGE CONTROLLER TEMPERATURE COMPENSATION SENSOR ON SIDE OF MAIN BATTERY.

REV.	DATE	APPR.	DESCRIPTION	BY
B	07/03	JTG	CHANGE VM100 P2/R2 CONNECTOR CONFIGURATION, ADD OPTIONAL JUNCTION BOX, CHANGE SHEET2, NOTE 3, AND ADD NOTE 4.	KMD
A	10/99	HRC	CORRECT THE R2 CONNECTIONS IN THE VM100	STN

DESIGNED: STN
DRAWN: STN
TRACED:
CHECKED: JTG/RA
REVIEWED BY: H.R. CLEVELAND G-SEC-2A
REVIEWED BY: J.A. KAYSER G-SCE-2
REVIEWED BY: L.E. JAEGER G-SEC-2

U.S. COAST GUARD HEADQUARTERS
CIVIL ENGINEERING

STANDARD AID TO NAVIGATION
CATEGORY III
SOLAR POWERED LIGHTHOUSE SYSTEM
(REGULATED)

APPROVED: CAPT. J.A. RAUCH
CHIEF, OFFICE OF CIVIL ENGINEERING
DATE 2-5-97

UNLESS OTHERWISE SPECIFIED:
ALL DIMENSIONS ARE IN INCHES.
TOLERANCES: DIM.
ANG.

DRAWING NUMBER 140413
REV. B
SCALE: NONE
SHEET 1 OF 3

PLOTTING SCALE:

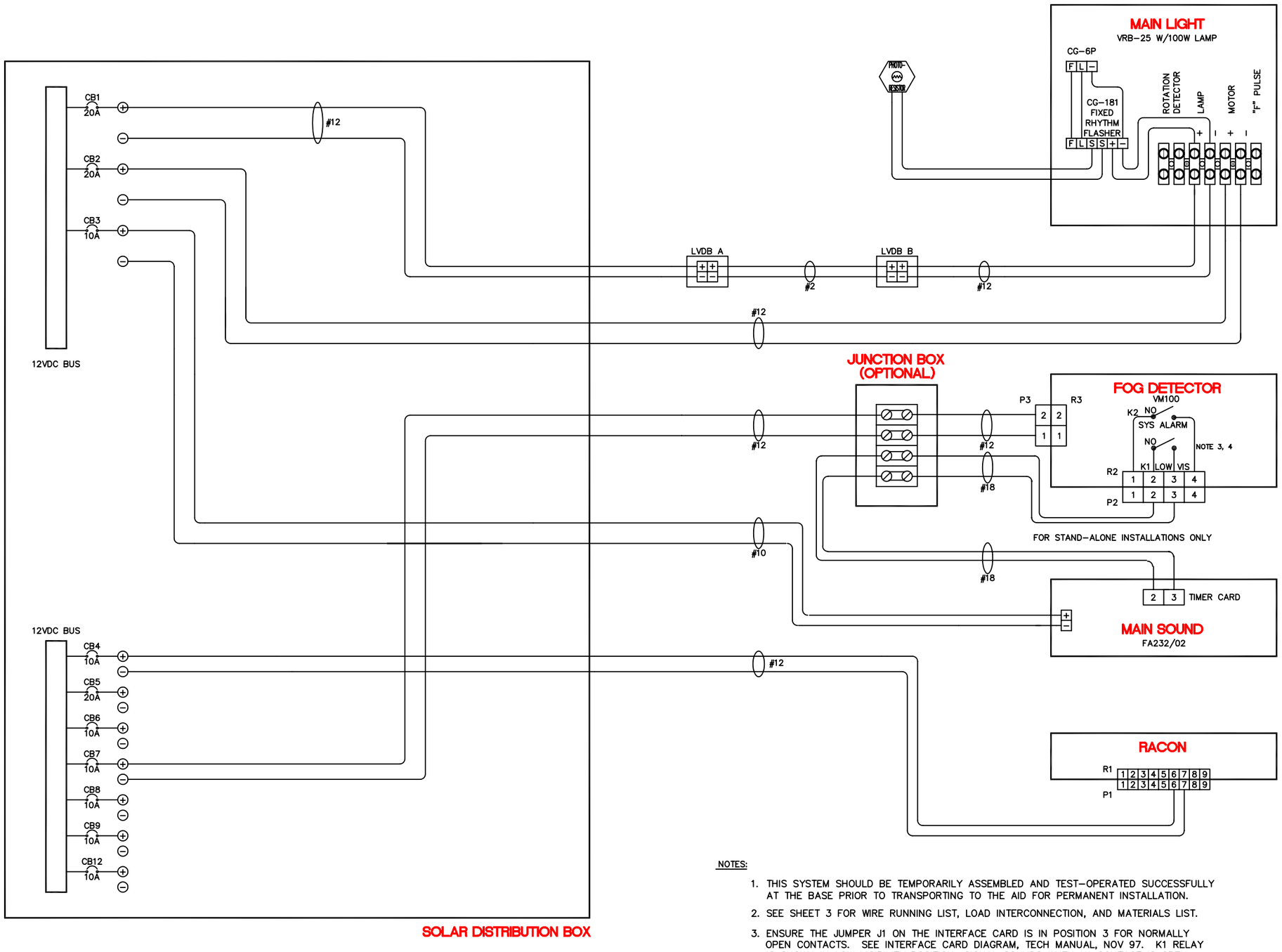

NOTES:

1. THIS SYSTEM SHOULD BE TEMPORARILY ASSEMBLED AND TEST-OPERATED SUCCESSFULLY AT THE BASE PRIOR TO TRANSPORTING TO THE AID FOR PERMANENT INSTALLATION.
2. SEE SHEET 3 FOR WIRE RUNNING LIST, LOAD INTERCONNECTION, AND MATERIALS LIST.
3. ENSURE THE JUMPER J1 ON THE INTERFACE CARD IS IN POSITION 3 FOR NORMALLY OPEN CONTACTS. SEE INTERFACE CARD DIAGRAM, TECH MANUAL, NOV 97. K1 RELAY IS SHOWN IN LOW VISIBILITY POSITION; SIGNAL SOUNDS WHEN K1 CONTACT IS OPEN. RELAY K2 CONTACT TERMINALS NOT USED.
4. DO NOT UNDER ANY CIRCUMSTANCES SEND LOAD CURRENTS THROUGH VM100 K1 AND/OR K2 RELAY CONTACTS.

REV.	DATE	APPR.	DESCRIPTION	BY
B	07/03	JTG	CHANGE VM100 P2/R2 CONNECTOR CONFIGURATION, ADD OPTIONAL JUNCTION BOX, CHANGE SHEET 2, NOTE 3, AND ADD NOTE 4.	KMD
A	10/99	HRC	CORRECT THE R2 CONNECTIONS IN THE VM100	STN

DESIGNED: STN
DRAWN: STN
TRACED:
CHECKED: JTG/RA
REVIEWED BY: H.R. CLEVELAND G-SEC-2A
REVIEWED BY: J.A. KAYSER G-SCE-2
REVIEWED BY: L.E. JAEGER G-SEC-2

U.S. COAST GUARD HEADQUARTERS
CIVIL ENGINEERING

STANDARD AID TO NAVIGATION
CATEGORY III
SOLAR POWERED LIGHTHOUSE SYSTEM
(REGULATED)

APPROVED: CAPT. J.A. RAUCH, CHIEF, OFFICE OF CIVIL ENGINEERING
DATE: 2-5-97

UNLESS OTHERWISE SPECIFIED:
ALL DIMENSIONS ARE IN INCHES.
TOLERANCES: DIM.
ANG.

DRAWING NUMBER: 140413
REV. B
SCALE: NONE
SHEET 2 OF 3

PLOTTING SCALE:

POINT TO POINT WIRE RUNNING LIST

FROM	WIRE SIZE (AWG)	MAX DISTANCE (FT)	TO
MAIN PV SUB-ARRAY, LTB, A(+)	8	6	PV COMBINER BOX, FB1-A
MAIN PV SUB-ARRAY, LTB, A(-)	8	6	PV COMBINER BOX, TB(-)
MAIN PV SUB-ARRAY, LTB, B(+)	8	6	PV COMBINER BOX, FB1-B
MAIN PV SUB-ARRAY, LTB, B(-)	8	6	PV COMBINER BOX, TB(-)
MAIN PV SUB-ARRAY, LTB, C(+)	8	6	PV COMBINER BOX, FB1-C
MAIN PV SUB-ARRAY, LTB, C(-)	8	6	PV COMBINER BOX, TB(-)
MAIN PV SUB-ARRAY, LTB, D(+)	8	6	PV COMBINER BOX, FB2-A
MAIN PV SUB-ARRAY, LTB, D(-)	8	6	PV COMBINER BOX, TB(-)
MAIN PV SUB-ARRAY, LTB, E(+)	8	6	PV COMBINER BOX, FB2-B
MAIN PV SUB-ARRAY, LTB, E(-)	8	6	PV COMBINER BOX, TB(-)
PV COMBINER BOX, TB(+) A	2	24	CHARGE CONTROLLER, CB1
PV COMBINER BOX, TB(-) A	2	24	CHARGE CONTROLLER, TB-1
PV COMBINER BOX, TB(+) B	2	24	CHARGE CONTROLLER, CB2
PV COMBINER BOX, TB(-) B	2	24	CHARGE CONTROLLER, TB-2
PV COMBINER BOX, TB(+) C	2	48	CHARGE CONTROLLER, CB3
PV COMBINER BOX, TB(-) C	2	48	CHARGE CONTROLLER, TB-3
PV COMBINER BOX, GROUND LUG	6	80	CHARGE CONTROLLER, GROUND LUG
CHARGE CONTROLLER, TB-4, BATTERY(+)	2	3.6	BATTERY BANK(+)
CHARGE CONTROLLER, TB-5, BATTERY(-)	2	3.6	BATTERY BANK(-)
CHARGE CONTROLLER, CB4, LOAD(+)	2	10	SDB, MAIN POWER IN TERM(+)
CHARGE CONTROLLER, TB-6, LOAD(-)	2	10	SDB, MAIN POWER IN TERM(-)
SDB, PIN 1(+)	12	2.5	LOW VOLTAGE DROP BOX, A(+)
SDB, PIN 1(-)	12	2.5	LOW VOLTAGE DROP BOX, A(-)
LOW VOLTAGE DROP BOX, A(+)	2	150	LOW VOLTAGE DROP BOX, B(+)
LOW VOLTAGE DROP BOX, A(-)	2	150	LOW VOLTAGE DROP BOX, B(-)
LOW VOLTAGE DROP BOX, B(+)	12	2.5	MAIN LIGHT, LAMP(+)
LOW VOLTAGE DROP BOX, B(-)	12	2.5	MAIN LIGHT, LAMP(-)
MAIN LIGHT, LAMP(+)	12	2.5	MAIN LIGHT, CG-181(+)
MAIN LIGHT, LAMP(-)	12	2.5	MAIN LIGHT, CG-181(-)
SDB, PIN 2(+)	12	150	MAIN LIGHT, MOTOR(+)
SDB, PIN 2(-)	12	150	MAIN LIGHT, MOTOR(-)
PHOTORESISTOR, IST LEAD	18	150	MAIN LIGHT, FLASHER(S)
PHOTORESISTOR, 2ND LEAD	18	150	MAIN LIGHT, FLASHER(S)
SDB, PIN 3(+)	10	40	MAIN SOUND SIGNAL(+)
SDB, PIN 3(-)	10	40	MAIN SOUND SIGNAL(-)
SDB, PIN 4(+)	12	160	RACON, P1-6(+)
SDB, PIN 4(-)	12	160	RACON, P1-7(-)
SDB, PIN 7(+)	12	80	FOG DETECTOR, R3-2, VIA P3
SDB, PIN 7(-)	12	80	FOG DETECTOR, R3-1, VIA P3
FOG DETECTOR, R2-2, VIA P2	18	150	MAIN SOUND, TIMER CARD, TERM #2
FOG DETECTOR, R2-3, VIA P2	18	150	MAIN SOUND, TIMER CARD, TERM #3

MAXIMUM DISTANCES SHOWN ABOVE ARE BASED ON THE CONFIGURATION SHOWN ON SHEETS 1 & 2.
CONSULT WITH THE WIRING SIZING GUIDE (G-SEC-2A) WHEN CONFIGURATION IS DIFFERENT.

BILL OF MATERIALS

ITEM	TYPE	SOURCE OF SUPPLY	QUANTITY
SOLAR PANEL (35-WATT)	G-ECV QPL 401A	ELC	SEE NOTE 1
MAIN BATTERY, LEAD ACID, SIX 2-VOLT CELLS	FULMEN SOLAR	EXIDE	SEE NOTE 1
LOCAL TERMINAL BOX	N/A	G-SEC	5
PV COMBINER BOX	N/A	G-SEC	1
CHARGE CONTROLLER	N/A	G-SEC	1
SOLAR DISTRIBUTION BOX	SDB	G-SEC	1
LOW VOLTAGE DROP PACKAGE	N/A	G-SEC	SEE NOTE 4
ROTATING BEACON, 12 VOLT	VRB-25	G-SEC	1
LAMPCHANGER, 12 VOLT	CG-6P	ELC	1
FIXED RHYTHM FLASHER	CG-181	ELC	1
PHOTORESISTOR	L	ELC	1
MAIN LAMPS	12VDC, 1.9A	ELC	6
SOUND SIGNAL	FA-232/02	AUTOMATIC POWER, INC.	1
RACON	TIDELAND SIGNAL CORP.	G-OPN	1
FOG DETECTOR	VM100	G-SEC	1

NOTES:

1. THE MAIN PV ARRAY CONSISTS OF 35-WATT PANELS, DIVIDED INTO UP TO 5 SUB-ARRAYS. EACH SUB-ARRAY CONSISTS OF UP TO 8 PANELS CONNECTED AS SHOWN IN SHEET 1, AND TERMINATED AT A LOCAL TERMINAL BOX. THE NUMBER OF PANELS, BATTERY SIZE AND TILT ANGLE SHALL BE DETERMINED BY THE SOLARCALC COMPUTER PROGRAM.
2. SYSTEM DESIGNED ON THE PREMISE THAT SOLAR PANELS AND BATTERIES WILL BE LOCATED NEAR EACH OTHER WITH SIGNAL LOADS FARTHER UP THE LIGHTHOUSE STRUCTURE.
3. WIRE SIZES ARE BASED ON MAXIMUM ANTICIPATED LOADS. WIRES MAY BE RESIZED ONLY IF LOAD AND CHARGING CIRCUIT VOLTAGE DROPS DO NOT EXCEED 0.35 VOLT AND 0.75 VOLT, RESPECTIVELY.
4. THE LOW VOLTAGE DROP PACKAGE CONSISTS OF TWO TERMINAL BOXES AND TWO #12/2 AWG CABLES (6 FT. EA.); PROJECT MANAGER BUYS #2 OR #1/0 CONDUCTOR AS NEEDED FOR SPECIFIC APPLICATION.

REV.	DATE	APPR.	DESCRIPTION	BY
B	07/03	JTG	CHANGE VM00 P2/R2 CONNECTOR CONFIGURATION, ADD OPTIONAL JUNCTION BOX, CHANGE SHEET2, NOTE 3, AND ADD NOTE 4.	KMD
A	10/99	HRC	CORRECT THE R2 CONNECTIONS IN THE VM100.	STN

DESIGNED: STN
DRAWN: STN
TRACED:
CHECKED: JTG/RA
REVIEWED BY: H.R. CLEVELAND
G-SEC-2A
REVIEWED BY: J.A. KAYSER
G-SCE-2
REVIEWED BY: L.E. JAEGER
G-SEC-2

U.S. COAST GUARD HEADQUARTERS
CIVIL ENGINEERING

STANDARD AID TO NAVIGATION
CATEGORY III
SOLAR POWERED LIGHTHOUSE SYSTEM
(REGULATED)

APPROVED: CAPT. J.A. RAUCH
CHIEF, OFFICE OF CIVIL ENGINEERING
DATE 2-5-97

UNLESS OTHERWISE SPECIFIED:
ALL DIMENSIONS ARE IN INCHES.
TOLERANCES: DIM.
ANG.

DRAWING NUMBER 140413
REV. B
SCALE: NONE
SHEET 3 OF 3

PLOTTING SCALE: