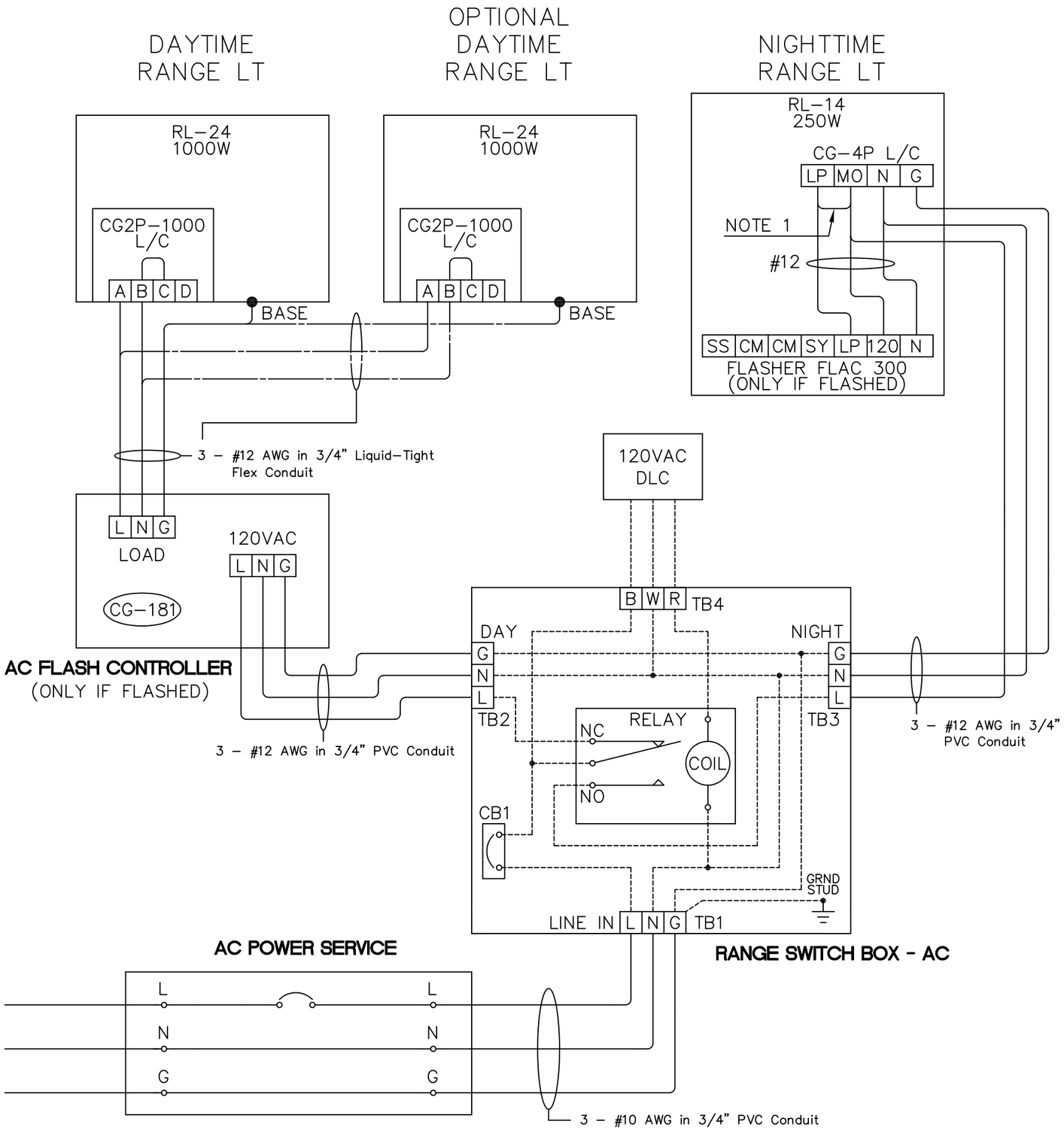

POINT TO POINT WIRE RUNNING LIST

FROM	WIRE SIZE (AWG)	MAX DISTANCE (FT)	TO
AC POWER SERVICE (L)	10	210	RANGE SWITCH BOX-AC, LINE IN(L)
AC POWER SERVICE (N)	10	210	RANGE SWITCH BOX-AC, LINE IN(N)
AC POWER SERVICE (G)	10	210	RANGE SWITCH BOX-AC, LINE IN(G)
RANGE SWITCH BOX-AC, DAY(L)	12		AC FLASH CONTROLLER, 120VAC(L)
RANGE SWITCH BOX-AC, DAY(N)	12		AC FLASH CONTROLLER, 120VAC(N)
RANGE SWITCH BOX-AC, DAY(G)	12		AC FLASH CONTROLLER, 120VAC(G)
RANGE SWITCH BOX-AC, NIGHT(L)	12		NIGHTTIME RANGE LT, CG-4P(MO)
RANGE SWITCH BOX-AC, NIGHT(N)	12		NIGHTTIME RANGE LT, CG-4P(N)
RANGE SWITCH BOX-AC, NIGHT(G)	12		NIGHTTIME RANGE LT, CG-4P(G)
AC FLASH CONTROLLER, LOAD(L)	12		DAYTIME RANGE LT, CG2P-1000(A)
AC FLASH CONTROLLER, LOAD(N)	12		DAYTIME RANGE LT, CG2P-1000(B)
AC FLASH CONTROLLER, LOAD(G)	12		DAYTIME RANGE LT, BASE
AC FLASH CONTROLLER, LOAD(L)	12		OP DAYTIME RANGE LT, CG2P-1000(A)
AC FLASH CONTROLLER, LOAD(N)	12		OP DAYTIME RANGE LT, CG2P-1000(B)
AC FLASH CONTROLLER, LOAD(G)	12		OP DAYTIME RANGE LT, BASE
DAYTIME RANGE LT CG2P-1000(B)	JUMPER		DAYTIME RANGE LT CG2P-1000(C)
OP DAYTIME LT RANGE CG2P-1000(B)	JUMPER		OP DAYTIME RANGE LT CG2P-1000(C)
NIGHTTIME RANGE LT, CG-4P(LP)	12		NIGHTTIME RANGE LT, FLAC 300(LP)
NIGHTTIME RANGE LT, CG-4P(MO)	12		NIGHTTIME RANGE LT, FLAC 300(120)
NIGHTTIME RANGE LT, CG-4P(N)	12		NIGHTTIME RANGE LT, FLAC 300(N)

BILL OF MATERIALS

ITEM	TYPE	SOURCE OF SUPPLY	QUANTITY
RANGE SWITCH BOX-AC	RSB-AC	G-SEC	1
AC FLASH CONTROLLER	ACFC	G-SEC	1(ONLY IF FLASHED)
DAYTIME RANGE LT, RL-24	CARLISLE & FINCH	G-SEC	1(2 IF REQUIRED)
2 PLACE LAMP CHANGER	CG2P-1000	ELC	1(2 IF REQUIRED)
LAMPS	1000W	ELC	2(4 IF REQUIRED)
NIGHTTIME RANGE LT, RL-14	CARLISLE & FINCH	ELC	1
4 PLACE LAMP CHANGER	CG-4P	TIDELANDS	1
120VAC FLASHER	FLAC 300	TIDELANDS	1(ONLY IF FLASHED)
LAMPS	250W	ELC	4

NOTES:

1. REMOVE THIS JUMPER IF FLASHED.
2. ———————— FOR OPTIONAL DAYTIME RANGE LT CONNECTIONS.
3. ---------- FOR RSB-AC INTERNAL WIRING CONNECTIONS.
4. RANGE LANTERN, BEAM WIDTH, AND LAMPS DETERMINED BY INTENSITIES RECOMMENDED BY THE RANGE DESIGN PROGRAM.
5. ALL WIRE RUNS SHALL BE ENCLOSED IN APPROPRIATELY SIZED RIGID OR LIQUID-TIGHT FLEX CONDUIT AS INDICATED TO FORM A WEATHERTIGHT SYSTEM AND PROTECT ELECTRICAL COMPONENTS FROM THE ELEMENTS.

REV.	DATE	APPR.	DESCRIPTION	BY
A	12/03	JTG	ADDED CONDUIT AND NOTE 5.	KMD

DESIGNED: STN
DRAWN: STN
TRACED:
CHECKED: KA/JTG
REVIEWED BY: H.R. CLEVELAND G-SEC-2A
REVIEWED BY: L.E. JAEGER G-SEC-2
REVIEWED BY:

U.S. COAST GUARD HEADQUARTERS
CIVIL ENGINEERING

STANDARD AID TO NAVIGATION

COMMERCIAL DAY/NIGHT RANGE
(RANGE CATEGORY C-D/N)

APPROVED: CAPT J.A. RAUCH
CHIEF, OFFICE OF CIVIL ENGINEERING
DATE 5/8/97

UNLESS OTHERWISE SPECIFIED:
ALL DIMENSIONS ARE IN INCHES.
TOLERANCES: DIM.
ANG.

DRAWING NUMBER 130503 REV. A
SCALE: NONE SHEET 1 OF 1

PLOTTING SCALE: