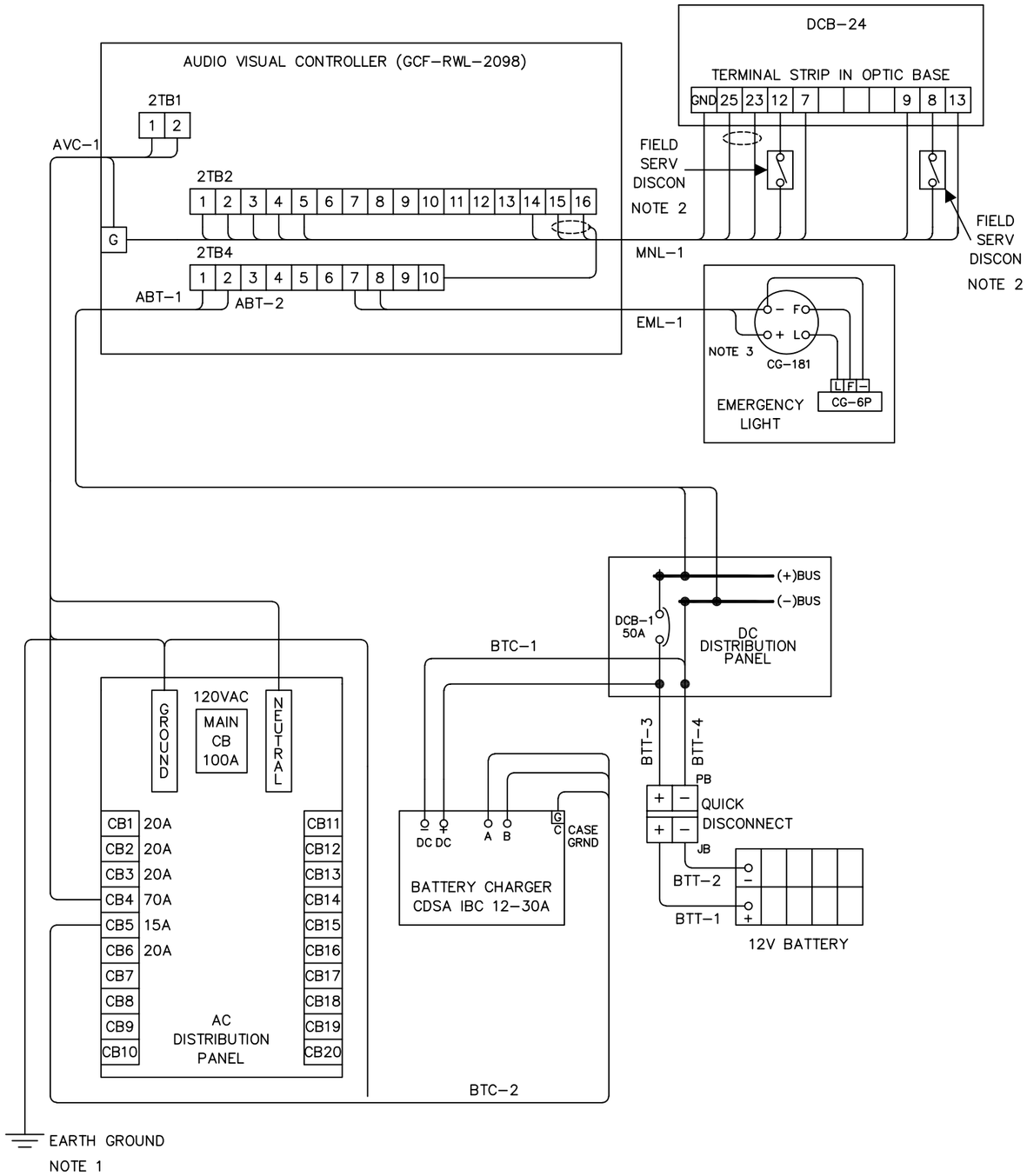

POINT TO POINT WIRE RUNNING LIST

FROM	WIRE SIZE (AWG)	WIRE CODE	CABLE DESIGNATION	TO
BATTERY CHARGER, (+) OUTPUT	12	A	BTC-1A	DC DIST PANEL, (+) DCB-1 LINE SIDE
BATTERY CHARGER, (-) OUTPUT	12	A	BTC-1B	DC DIST PANEL, INPUT BUS
QUICK DISCONNECT, (+) INPUT	6	A	BTT-1	EMREG BATTERY, (+) POST
QUICK DISCONNECT, (-) INPUT	6	A	BTT-2	EMERG BATTERY, (-) POST
QUICK DISCONNECT, (+) OUTPUT	6	A	BTT-3	DC DIST PANEL, DCB-1 LINE SIDE
QUICK DISCONNECT, (-) OUTPUT	6	A	BTT-4	DC DIST PANEL, (-) INPUT BUS
DC DIST PANEL, (+)OUTPUT BUS	6	A	ABT-1	AUDIO VISUAL CONTROLLER, 2TB4-1
DC DIST PANEL, (-)OUTPUT BUS	6	A	ABT-2	AUDIO VISUAL CONTROLLER, 2TB4-2
AC DIST PANEL, CB4	4	A	AVC-1A	AUDIO VISUAL CONTROLLER, 2TB1-2
AC DIST PANEL, NEUTRAL BUS	4	A	AVC-1B	AUDIO VISUAL CONTROLLER, 2TB1-1
AC DIST PANEL, GROUND BUS	4	A	AVC-1C	AUDIO VISUAL CONTROLLER, CASE GRND
AC DIST PANEL, CB5	14	A	BTC-2A	BATTERY CHARGER, AC LINE INPUT
AC DIST PANEL, NEUTRAL BUS	14	A	BTC-2B	BATTERY CHARGER, AC NEUTRAL INPUT
AC DIST PANEL, GROUND INPUT	14	A	BTC-2C	BATTERY CHARGER, GROUND
AUDIO VISUAL CONTROLLER, 2TB2-1	TBL 1	A	MNL-1A	DCB-24, TS-12 (VIA DISCONNECT)
AUDIO VISUAL CONTROLLER, 2TB2-2	TBL 1	A	MNL-1B	DCB-24, TS-7
AUDIO VISUAL CONTROLLER, 2TB2-3	14	D	MNL-1C	DCB-24, TS-13
AUDIO VISUAL CONTROLLER, 2TB2-4	14	D	MNL-1D	DCB-24, TS-8 (VIA DISCONNECT)
AUDIO VISUAL CONTROLLER, 2TB2-5	14	D	MNL-1E	DCB-24, TS-9
AUDIO VISUAL CONTROLLER, 2TB2-15	18	B	MNL-1F	DCB-24, TS-23
AUDIO VISUAL CONTROLLER, 2TB2-16	18	B	MNL-1G	DCB-24, TS-25
AUDIO VISUAL CONTROLLER, 2TB2-10		B	SHIELD	NO CONNECTION
AUDIO VISUAL CONTROLLER, CASE GRND	12	A	MNL-1H	DCB-24, TS-GRND
AUDIO VISUAL CONTROLLER, 2TB4-7	10	A	EML-1A	EMERG LT, CG-181(+) (SEE NOTE 3)
AUDIO VISUAL CONTROLLER, 2TB4-8	10	A	EML-1B	EMERG LT, CG-181(-) (SEE NOTE 3)

WIRE CODES:

A-SINGLE CONDUCTOR STRANDED THWN INSULATION
B-TWO CONDUCTOR SHIEDED BELDEN #8760

NOTES:

1. FOR PROPER GROUNDING INTERCONNECTIONS SEE DWG CG-130419 AND CHAPTER 7 OF COMDTINST M16500.8A.
2. FIELD SERVICE DISCONNECTS SHALL BE INSTALLED NEAR THE OPTIC TO BREAK CONNECTIONS TO OPTIC TERMINAL TS-8 AND 12 FOR OPTICS PROVIDING 120VAC LINE SIGNAL FOR SECONDARY LAMP INDICATION. OPTICS PROVIDING 120VAC NEUTRAL SIGNAL SHALL IN ADDITION HAVE FIELD SERVICE DISCONNECT TO BREAK THE CONNECTION TO OPTIC TERMINAL TS-13. REFER TO DWG 130702 AND OPTICAL TECHNICAL MANUAL. LABEL THE DISCONNECT TO OPTIC TERMINAL #8 "MOTORDISC", TO TERMINAL #12 "LAMPDISC", AND WHERE USED TO TERMINAL #13 "L/C MONDISC".
3. WIRE FOR CG-181 TO LAMPCHANGER IS AVAILABLE AS NSN 6230-00-G00-4343.

TABLE 1

MAINLIGHT CONDUCTOR LIGHT

WIRE SIZE (AWG)	ALLOWED DISTANCE (FEET)
12	72
10	112
8	180

NOTE THAT A VARIAC, BUCK-BOOST TRANSFORMER ARRANGEMENT, OTHER ADJUSTABLE TRANSFORMER SYSTEM MAY BE USED AT THE OPTIC TO CORRECT THE LAMP VOLTAGE TO 120 VOLTS INSTEAD OF OVERSIZING THE FEEDER CONDUCTORS TO MINIMIZE VOLTAGE DROP.

REV.	DATE	APPR.	DESCRIPTION	BY
D	1/87	HRC	CHANGE 50A BREAKER TO 20A AT CB6	KA
C	10/77	HRC	ADD SHIELD GROUND TO 2TB4-10.	CWF
B	4/77	HRC	CHANGE MAIN OPTIC TS-10 TO TS-12, OMIT EXISTING TS-12. OMIT CONNECTION TO AVC 2TB2-14.	CWF
A	2/77	CWS	CHANGE MAIN CB FROM 150A TO 100A.	CWF

DESIGNED: RAD
DRAWN: CWF
TRACED:
CHECKED: R.A.DOUGHTY
REVIEWED BY: P.HAWKINS
CH ELECT SECT
REVIEWED BY: H.R.CLEVELAND
CH SYS SECT
REVIEWED BY: C.W.SCHECK
CH SUP EQ BR

U.S. COAST GUARD HEADQUARTERS
CIVIL ENGINEERING

STANDARD AID TO NAVIGATION
DCB-24 ROTATING OPTIC
WITH EMERGENCY LIGHT
INTERCONNECTING DIAGRAM

APPROVED: J.E. GRABB
CHIEF OF DIVISION
DATE 5/12/76

UNLESS OTHERWISE SPECIFIED:
ALL DIMENSIONS ARE IN INCHES.
TOLERANCES: DIM.
ANG.

DRAWING NUMBER 130402 REV. D
SCALE: NONE
SHEET 1 OF 1

PLOTTING SCALE: