INSTRUCTIONS
TO
LIGHT-KEEPERS.

JULY, 1881.

UNITED STATES LIGHT-HOUSE ESTABLISHMENT.

INSTRUCTIONS

TO

LIGHT-KEEPERS.

JULY, 1881.

BY AUTHORITY OF THE LIGHT-HOUSE BOARD.

WASHINGTON:
GOVERNMENT PRINTING OFFICE.
1881.

NOTICE.

OFFICE OF THE LIGHT-HOUSE BOARD,
WASHINGTON, D. C., *July* 1, 1881.

The following Instructions are published for the guidance of light-keepers. They are required to read them carefully and attentively, and to refer to them whenever they have any doubts in regard to their duties or the manner of performing them.

Each keeper and assistant keeper will be furnished with a copy, *to be kept and used at the light-stations* where they are employed; to be handed over to their successors when they are relieved or discharged or left at the light-stations in case there should be no successors.

Each light-vessel keeper will be provided with two copies, for the use of himself and those of the crew who are charged with the management of, and attendance upon, the lights and fog-signals.

BY ORDER OF THE LIGHT-HOUSE BOARD:

JOHN RODGERS,
Rear-Admiral, U. S. N., Chairman.

Note: These pages are excerpted from the 1881 *Instructions to Light-Keepers* using a copy of the original publication from the U.S. Coast Guard Historian's Office in Washington, D.C. Not all pages (specifically the salary tables) and plates were included in this version.

TREASURY DEPARTMENT,
Document No. 151.
Light-House Board.

GENERAL INSTRUCTIONS TO ALL LIGHT-KEEPERS.

1. The keeper is responsible for the care and management of the light, and for the station in general. He must enforce a careful attention to duty on the part of his assistants; and the assistants are strictly enjoined to render prompt obedience to his lawful orders. Keeper responsible for.

2. In the absence of the keeper his duties will devolve upon the assistant present who is next in rank. No keeper shall leave his station without informing the assistant present who is next in rank of his intention, and of the probable length of his absence; and no assistant shall leave without the previous knowledge and consent of the keeper; but this regulation will not justify the keeper in denying an assistant any proper leave of absence. Duties of keeper to devolve on assistant; when.

3. An accurate report of absences, with the reasons therefor, must be forwarded monthly to the Inspector by the keeper. Report of absences.

4. Watches must be kept at all stations where there is an assistant. The keeper on watch must remain in the watchroom and give continuous attention to the light while he is on duty. When there is no assistant, the keeper must visit the light at least twice during the night between 8 p. m. and sunrise; and on stormy nights the light must be constantly looked after. Watches to be kept when there is an assistant. Duty of keeper when there is no assistant.

5. No keeper can excuse an assistant from his regular share of duty, except on account of disability. When such disability continues, immediate report thereof must be made to the Inspector. No keeper to excuse an assistant except for disability.

6. Light-keepers may leave their stations to attend divine worship on Sundays, to procure needful supplies, and on important public occasions. As no specific rules can be established limiting the times and durations of absences, keepers will be held to strict account for any abuse of privileges. Absence.

7. In case of sickness, keepers must provide efficient attendants for the lights; but when a keeper is, or is likely to become, incapable of duty, the Inspector must be informed at once of the need for assistance. Sickness.

8. All keepers must acquaint themselves with the workings of the apparatus in their charge. Upon any doubtful point questions must be asked. When the station is visited by an officer or employé of the Light-House Establishment, especially while the machinist or lampist is there, the keepers must take pains to acquire knowledge of every detail regarding the mechanism of the apparatus. Ignorance upon any point will not be considered as an excuse for neglect of duty. To be conversant with the apparatus.

9. The keeper is responsible for the careful management and expenditure of stores and supplies. He must practice the strictest economy compatible with maintaining at all times the best possible light; and he must be careful to prevent waste, theft, or misapplication of light-house property. Responsibility for stores.

10. Keepers having assistants will, in the presence of an assistant, attend personally to the daily issues. Keepers who have no assistants are required to take from the oil and store rooms, daily, the necessary articles and quantities of supplies for that day's use. At the time of doing so they must enter them correctly in the expenditure Issue of stores.

book. The exact quantity taken at the time must be entered, and not the average of each day's use.

No light-house to be left without some one in charge.

11. A light-house must never be left wholly unattended. Where there is a keeper and one or more assistants, either the keeper or one of the assistants must be present. If there is only one keeper, some member of his family, or other responsible person, must be at the station in his absence.

Watches.

12. Where there are assistants, the watches must be divided so that an equal share of work shall fall to each keeper. A watch book must be kept and signed by each person when he comes off watch. He must record in the book the condition of the light and the hour when he left the watchroom. If there is a fog-signal at the station, and it is in operation, he should also so state, and specify its condition.

Keeper to share duty.

13. The keeper shall take an equal share in all the work and duties of the station with the assistant keepers.

Neglect of duty of keeper. Assistants to report.

14. When a keeper neglects his duties, it is the imperative duty of each assistant at the station to report the facts, without delay, to the Inspector. The reported keeper must be informed of the complaints made against him, so that he may, if he sees fit, transmit a statement to the Inspector with the report.

Traffic at light-stations forbidden.

15. Light-keepers must not engage in any traffic on light-house premises, and they must not permit it by any one else. They must not carry on any business or trade elsewhere which will cause them to be often absent from the premises, or to neglect, in any way, their proper duties.

Visitors.

16. Keepers must be courteous and polite to all visitors who conform to the regulations, and show them everything of interest about the station at such times as it will not interfere with their light-house duties. Keepers must not allow visitors to handle the apparatus or deface light-house property. Special care must be taken to prevent the scratching of names or initials on the glass of the lanterns or on the windows of the towers. No visitor should be admitted to the tower unless attended by a keeper.

Intoxicated persons.

17. Keepers must under no circumstances allow an intoxicated person to enter a light-tower, nor to remain on the premises longer than is necessary to get him away by the employment of all proper and reasonable means.

No fees allowed.

18. Keepers must not make any charge, nor receive any fee, for admitting visitors to light-houses.

Assistance to laborers.

19. Keepers must render every assistance in their power to laborers employed in making repairs or alterations at light-stations. In all cases where keepers are able to make repairs they are expected to do the work themselves. All the mechanical skill of a keeper should be exercised in keeping his station in good order.

Change in color of buildings; when made.

20. Keepers must make no change in the color of towers or buildings without written orders.

Neatness demanded.

21. The utmost neatness of buildings and premises is demanded. Bedrooms, as well as other parts of the dwelling, must be neatly kept. Untidiness will be strongly reprehended, and its continuance will subject a keeper to dismissal.

Keepers' families only allowed at light-stations.

22. Only members of keepers' families may reside at light-stations. The Light-House Board alone can grant any exception to this rule.

Wrecks.

23. Keepers must report promptly to the Inspector, on the proper form, all wrecks which take place in the vicinity of their stations. All the facts relating to the wreck (whether or not the light was seen, &c.) must be ascertained and the account embodied in the report. It is the duty of light-keepers to aid wrecked persons as far as lies in their power.

Precautions against fire.

24. Every precaution must be taken against fire. Fire-buckets, when provided, must be kept filled with water and ready for use in a fixed place. In case of the ignition of mineral oil, it can be better extinguished with sand or ashes than with water.

25. Fires and lights in keepers' dwellings must never be left unattended. Fires and lights not to be left unattended.

26. Boats are furnished to light-stations where they are necessary for communication with the mainland, to obtain household supplies, &c., or they are supplied that keepers may perform their public duties properly. They are not provided for personal benefit and convenience. Keepers are forbidden to use boats thus placed in their charge for any other than light-house purposes. The boats must not be used for freighting, wrecking, fishing with seines, ferrying, or for carrying goods or passengers for hire. Keepers must make good all damages to boats or their equipments caused by their carelessness or neglect. Boats.

27. When a keeper resigns or is removed, a correct inventory of all public property under his charge must be made in the presence of his successor. Three copies of this inventory must be made and signed by his successor; one is to be retained by him, one is to be kept by the retiring keeper, and the third is to be transmitted by him to the Inspector. On the death of a keeper, his widow, or whoever has been left in charge of the light, must turn over the public property to the new keeper as above required. Change of keeper.

28. No keeper who resigns or is removed, and no representative of such keeper, shall receive any balance on account of salary until he shall have accounted satisfactorily for all public property in his charge.

29. No keeper should sign receipts upon entering on his duties, or at any other time, for any supplies until he is satisfied that the articles and quantities are correctly stated. Keepers will be held pecuniarily responsible for all for which they receipt. Receipts.

30. Condemned articles, and articles no longer of use at light-stations, must be delivered to the master of the supply vessel. Keepers must obtain duplicate receipts for these articles, retain one, and forward the other to the Inspector. Condemned articles.

31. Monthly or special reports of the condition of a light-station must state explicitly what is wanted, in case any repairs or changes are needed. All measurements, estimates, &c., must be given so fully that the Inspector or Engineer will not have to write for further information. Failure to do this has caused much inconvenience and delay. Monthly reports.

32. Keepers of stations situated where navigation is closed by ice in winter, will exhibit their lights so long as any vessel is running in that vicinity. Lights may be extinguished when navigation is entirely suspended, but must always be shown if it is at all possible for vessels to benefit by them. Report must be made to the Inspector of the time of discontinuance and also of the time of relighting. Lights to be put out when ice suspends navigation.

33. Keepers at island stations on the northern lakes must be governed in exhibiting their lights by the action of those on the mainland. Those who cannot reside at their stations during the winter, or who are permitted to be absent by special authority, must continue their lights as long as possible in the fall without endangering their lives by being caught in the ice; and must return to their stations as early in the spring as the ice will permit.

CARE OF LIGHTS AND THEIR APPURTENANCES.

34. Lights must be lighted punctually at sunset, and must be kept burning at full intensity until sunrise.

35. All preparations must be made early, that there may be no delay in lighting. Punctuality demanded.

36. When the light is extinguished in the morning the keeper must hang the lantern curtains and immediately begin to put the apparatus in order for relighting. While doing this the linen aprons provided for the keeper's use must be worn, that the lens may not suffer from contact with the wearing apparel. The illuminating apparatus must be carefully covered before the cleaning is begun. Morning duties.

37. The lens and the glass of the lantern must be cleaned daily and always kept in the best possible condition. Before beginning to clean the lens it must be brushed Cleaning lens.

[To Face Page 7, Instructions to Light-Keepers.]

SALUTES.

Keepers of light-stations and light-vessels provided with bells will salute, with three strokes of the bell, light-house tenders upon their approach to and departure from such stations and vessels. The salute will be returned by the tender with three blasts of the whistle or by three strokes of the bell.

In case of a passing tender, one salute as above prescribed, will be given and returned.

The salute vill also be given to all vessels of the United States Government, and to any vessel which is known by the keeper to have on board any person entitled to the courtesy of a salute.

In case the bell has no inside clapper which can be rung by hand, the connecting rod to the machine should be detached before using the striker for salutes.

INSTRUCTIONS FOR USE OF EIGHT-DAY LANTERNS.

Take off reservoir, turn it upside down and fill it completely with oil.

Put reservoir back, light the lamp, let it burn for half an hour and see that it does not smoke.

Once a week put in a new wick, throw out oil in body of lamp and rinse with a little fresh oil, put in a clean wire-gauze strainer.

To clean strainers boil in concentrated lye.

These lanterns will not go out in the wind, but are liable to be extinguished by a shock, so when the lantern is hung up care should be taken that it cannot strike the support.

When convenient, it is better to place the lantern on a shelf on top of a post.

with the feather brush to remove all dust. It must then be wiped with a soft linen cloth, and finally polished with buff-skin. If there is oil or grease on any part it must be taken off with a linen cloth, moistened with spirits of wine, and then polished with a buff-skin. *Under no circumstances must a skin which has been wet or damp be used, as this will scratch the lens.*

How to prepare and use rouge.

38. Rouge must be used for polishing the lens whenever necessary. When it is used it should be broken up, put in water, and reduced to a smooth mixture. To do this the rouge should be put into about a pint of water and stirred with a *perfectly clean* stick. Let it rest for a few moments to allow any gritty particles it may contain to settle; then pour it off into another vessel, allowing the grit to remain in the first; then leave it to settle for about half an hour, and then pour off the water. The rouge so prepared must be spread with a camel's-hair brush, or a piece of soft linen, over the entire surface of the glass to be cleaned. When this coating of rouge has become dry, rub it off with a piece of buff-skin until it is all removed. Rouge must be freshly prepared each time it is used.

Whiting.

39. Whiting is prepared and used in the same manner as rouge.

Rotten-stone.

40. To use rotten-stone for polishing brass work, pulverize it carefully in a tin pan and mix it with water or oil until it becomes a thin paste. Use it with a woollen cloth, free from dust or grit. After rubbing with the rotten-stone finish with whiting, using a soft, clean rag.

Care of reflector.

41. To clean reflectors, first dust them and then rub with a buff-skin, lightly dusted with rouge powder, kept in a small double bag of muslin; then rub lightly with another skin, and finally with a third, which should be passed over the reflector in a light, quick manner with a circular motion. Leakage of gas from the pipe of the stove used in the watchroom should be carefully guarded against, as this gas will badly tarnish a reflector. Silver-plated reflectors are much more easily injured than glass, and require great care.

Care of chimneys.

42. To clean the chimneys they must, if soiled by smoke or oil, be rubbed with a rag or a small piece of soft wood dipped in oil, then wiped off and cleaned with whiting. If this does not remove discolorations they should be rubbed with a wet cloth and a little soda or common salt; but they must be washed in warm water afterwards, as any adhering salt will cause breakage.

Material for cleaning and polishing.

43. Keepers are forbidden to use any other materials for cleaning or polishing purposes than those supplied by the Light-House Establishment.

Dust to be avoided.

44. Keepers are forbidden to clean the floors of the lanterns or the stairs and floors of towers with any material by which dust may be produced. All materials used must be damp, and be carefully removed before they are dry. All sweeping must be done with care, and chiefly with hand brushes.

Place for utensils.

45. Utensils of all kinds must be kept in their proper places. While the light is burning, everything which does not belong in the lantern must be removed from it.

Clock-work.

46. The revolving clock-work must be kept carefully from dust; it must be oiled with clock oil whenever necessary, care being taken to remove any old and gummy oil before new oil is applied. All parts made of iron or steel must be rubbed with a cloth greased with tallow. *The use of salted grease is forbidden.* The foot of the fly-shaft must be examined occasionally to see that it is not cutting or wearing.

Chariot.

47. The chariot or carriage upon which the lens revolves must be carefully wiped and the rollers kept properly oiled. If it is necessary to take off the rollers and clean them, this must be done with great care. The rollers must be removed one by one, and put back without changing the number of washers previously in use, as the carriage will turn irregularly if all the rollers are not exactly the same distance from the center. When there is any serious trouble with any part of the revolving clock-work or machinery the Inspector and Engineer must be at once informed, and a machinist will be sent to remedy the difficulty.

48. When not in use, the weight must always be kept upon its rest, that the strain on the cord may be relieved. Weight.

49. Keepers must replace the broken glass of the lantern as quickly as possible. They must learn how to use the cutting-diamond, so as to be able to cut the glass when necessary. When glass is cut, its edges should be ground level and smooth by rubbing it upon a cast-iron plate covered with sharp wet sand. In placing the glass, about one-twelfth of an inch play should be left all around between it and the iron frame. If it touches the iron, great risk of its being broken by the oscillation of the lantern in high winds will be incurred. Thin cleats of lead or soft wood must be used to rest the glass upon when in place. In joining two pieces of glass which rest one upon the other, the upper edge of the lower piece should be covered with putty about two-tenths of an inch in thickness; on this two small strips of lead should be placed, upon which the upper plate should rest; the weight will press out any excess of putty, which excess should immediately be taken off with the glazing-knife. The putty on the outside of the frame should be laid evenly and flush with the face of the sash. In replacing the outside slats of the sash, a small quantity of putty should be put over the head of each screw after it has been screwed home, as this will serve to keep the screw in place. To replace broken panes.

50. The following-named returns must be made by keepers of light-houses:* Returns.

Monthly: Report of condition of station, both to Inspector and Engineer.
Fog-signal report.
Absence report.

Quarterly: Expenditures of oil, &c.
Vouchers for salary.
~~Abstract of passing vessels.~~

Annually: Property returns.

When necessary: Receipt for extra supplies.
Keeper's receipt for property on taking charge.
Receipt for delivery of supplies.
Shipwreck report.
Report of any damage to station or apparatus (this to be made both to the Inspector and Engineer).
Any unusual occurrence.

The vouchers for salary must be so sent that they will arrive at the Inspector's Office at least a week before the end of the quarter.

51. The following books must be kept at all stations: Books.

Daily-expenditure book.
General-account book.
Journal.

A watch book must be kept also at all stations where there is more than one keeper, and a fog-signal record where there is a fog-signal. In keeping the journal, two pages (the right and the left), are to be used for one month. The events of the day must be written on one line across both pages. As a general rule, if carefully written, one line will be found sufficient. The visits of the Inspector or Engineer, or of the lampist or machinist, and an account of any work going on or delivery of stores, must be noted; as also any item of interest occurring in the vicinity, such as the state of the weather, or other similar matter. The books must be kept in ink, with neatness, and must always be kept up to date.

INSTRUCTIONS TO KEEPERS USING THE FUNCK LARD-OIL FLOAT-LAMP.

52. Fill the upper reservoir, first closing the stop-cock in the supply-tube; then open the stop-cock and allow the oil to completely saturate and overflow the wicks, after which close the stop-cock until ready to light. Filling the reservoir.

* The returns required from keepers of light-vessels are given on page 16.

Burner to be carefully leveled and focused.

53. Before lighting, and after all connections are made, see that the burner is perfectly level and in the focus. This must be done carefully, as the screwing on of the supply-tube is apt to throw the burner out of adjustment. Failure to level the burner is apt to cause breakage of chimneys; and the light will not burn so well when the oil is higher on one side of the burner than on the other. It is also absolutely necessary that the light should be in the focus, as if it is not so it cannot show well outside. Great care and attention must be given by keepers to these two essentials of a good light.

Lucernes

54. Keepers are forbidden to use anything but the lucernes, or the small hand lamps, in lighting the lamps, as if paper or matches are used, parts are liable to fall into the burner and retard the flow of oil.

Lighting.

55. When lighting up, light the inner wick of the burner first. Having the wick turned up about one-third of an inch, hold the lucernes at two opposite points, lighting the wick in two places at once. When the wick is burning all around, turn it down low and proceed to light the second wick, and so on until all the wicks are lighted.

How to manage the flame.

56. After first lighting, the flame must be kept low, and the chimney above its proper position, so that it will be slowly heated; turn the wicks up slowly, and gradually lower the chimney until the full height of the flame is reached. This ought to be at the end of half an hour, at which time the flame should show a height for a first-order lamp of from $3\frac{1}{2}$ to $3\frac{3}{4}$ inches; for a second order of from 3 to $3\frac{1}{4}$; for a third order of from $2\frac{1}{2}$ to $2\frac{3}{4}$. [See Plate 6.] A gauge is furnished, showing about what this height should be. The wicks, when the light is at its full intensity, should be turned up until the flame can be raised no higher without smoking.

Color of flame; chimney.

57. The flame must be throughout as *white* as possible. If it is of a reddish tint it shows that the chimney is too high, or that the damper does not allow sufficient draught, or that the ventilation is not sufficient. If the chimney is too low a white flame will be obtained, but the flame will not be high enough. When the wind is light, a portion of all the ventilators may be opened; if strong, only those to the leeward. They must be managed so that the light will burn clearly and steadily.

Ventilation.

Broken chimney.

58. If a chimney breaks, turn down the light immediately and put on a spare one, four of which must always be on hand.

Trimming wicks.

59. If the wicks need trimming, turn the light as low as possible, and trim them without removing the burner. In removing the chimney to do this, wrap it in the flannel cloth provided for the purpose, so that it will not cool too suddenly.

Spare burner.

60. A spare burner must always be at hand, ready for use, in case one of the wicks gives out, or in case the service burner is in any way out of order. When it becomes necessary to replace the service burner, dip the spare burner in oil before putting it in place, so as to saturate the wicks, after which it may be adjusted.

Stoppage of oil.

61. If the oil does not flow freely, or if the supply is entirely cut off, it must, in nearly all cases, be from a stoppage in the float-chamber. When this occurs, remove and clear the float chamber. An accident such as this, however, can scarcely happen with a careful keeper, as it can only occur when the apparatus is clogged with dirt.

Putting out lights.

62. In putting out the light at sunrise, care must be taken to prevent a sudden cooling of the lamp. Care must also be taken not to heat it too quickly on lighting. To put out the light, the wicks must be slowly turned down, beginning with the outer one. When the light is finally extinguished and the chimney after a time taken off, the chimney must be wrapped in the flannel cloth, that it may cool slowly.

Dismounting and cleaning lamp.

63. Once in six months dismount the lamp and thoroughly overhaul it, putting the spare one in its place. Boil the burner and strainer in strong soap-suds, then thoroughly wash all parts of the lamp, rinse them in clean hot water to remove the soap, putting the tubes and burner near a hot stove to dry out the moisture; wipe out the reservoir with a clean towel. Examine the washers of the pump carefully.

Examine float-chamber.

64. Examine the float and float-chamber once a week at least. Lint or woolen fiber is frequently found in the oil, which collects around the pin and clogs the passage of

the oil; nothing sharp or hard must be used to clean the valve-seat; a piece of soft wood should be used for this purpose.

65. In placing the lamp, the cross-threads provided for the purpose must be used to center the burner and to get it into focus. There is a small wooden gauge furnished which fits in the center of the burner; the lower reservoir (the burner being in place) must be moved until the center of the gauge is just under the intersection of the cross-threads and touching them. The spirit-level must then be used to show that the burner is level, and the burner or reservoir must be moved or changed until the burner is exactly level and the center of the wooden plug or gauge is at the proper point. The light will never show well unless it is properly leveled and focused. Placing lamp.

66. Lard-oil butts must be kept tightly covered, their gutters filled with oil, and their air-cocks closed, or the oil will become rancid. A drip-can must always be hung on the draw-off cock to catch all drippings. In drawing off the oil, first turn the air-cock to admit air, otherwise the oil will not flow, but the air-cock must be closed again as soon as the drawing of the oil is finished. When a butt has been emptied, it must be thoroughly cleaned and washed out and wiped quite dry; the gutters must then be filled with oil and the cocks all closed. Lard-oil butts.

67. The oil found in the lower reservoir after the light has been put out in the morning is to be drawn off as low as it will run through the cock, and any remaining oil must be taken up with a clean sponge or towel and squeezed into the oil-carrier. To this oil add a sufficient quantity from the butt to refill the lamp. When ready to refill, the oil must be drawn into a clean carrier and from thence poured into the reservoir. The actual quantities consumed must constitute the daily expenditures; no guessing or averaging will be permitted.

68. In cold weather, heat the oil before putting it in the reservoir. Its temperature should be raised to about 90° or 100° (Fahrenheit), or until it is a shade too hot to bear to hold the hand in it. If too hot it will injure the pump-leathers. If it is unusually cold the precaution may be taken of wrapping flannel about the float-chamber, as it is there the oil is most likely to chill. Oil in cold weather.

69. Oil which has any sediment in it must be put in a separate butt used to hold impure oil. From this butt must be taken all the oil used for house lamps. After the oil in this butt has well settled, the clear oil may be drawn off again and used in the light-house lamp. Impure oil.

INSTRUCTIONS TO KEEPERS USING THE FUNCK MINERAL-OIL FLOAT-LAMP.

70. Fill the reservoir until the oil is visible in the strainer through which it must be poured. When it is full, close the faucet and wind the plunger up to its full height. Filling reservoir.

71. Open the faucet about ten minutes before it is time to light the lamp.

72. To light the lamp, raise the damper-tube D (see Plate 2) into the connecting-tube K, and let it rest on the locks 19; then raise the chimney-holder close up to the surface of the burner. Immediately after lighting, adjust the chimney and the damper-tube so as to prevent any smoke. The flame should be kept low at first and the chimney high, so that the chimney may be slowly heated. Raise the wicks gradually and lower the chimney until the flame is at its best, which should be at the end of about half an hour. Lighting.

73. The damper must be so managed that the flame will burn clear and at its full height and with no smoky points. This must have much and careful attention. Use of damper.

74. About ten minutes before sunrise, close the faucet, open the damper, and let the flame burn itself out. Then remove and wrap the chimney in flannel until it is entirely cooled. Then simply wipe the ash from the wick; no other trimming is required. With a goose feather or any feather sufficiently long, clean the whole length of the air-spaces in the burner. Extinguishing and trimming lamp.

Changing burner.

75. If it is necessary to remove and replace the burner during the night remove the chimney, close the faucet 10 (see Plate 2); unscrew nut 9 and screws 15; then slide the burner forward to detach it from the float-chamber connection.

To remove float.

76. To remove and replace the float, unscrew the cap 14 of the float-chamber F; take out the float-support 13 with the float; hold the latter with one hand and with the other unscrew steel pin 12, which will release the float. Before replacing the float, blow through the supply-tube G, and if it is not free from obstruction it must be made so by washing in hot soap-suds. The strainers must be cleaned with hot soap-suds. In cleaning the valve-seat, use a clean piece of soft wood; no wire or hard substance must be used.

Fitting wicks.

77. In fitting the wicks, be careful to prevent them from extending below the rings.

To remove plunger.

78. To take out the plunger, first dismount the burner and float-chamber; take out small weights; remove the oil with the siphon; unfasten the screws which hold the top plate of the reservoir. Then wind the crank until the plunger is at the upper end of the cylinder, when it is easily removed by taking hold of the bridge to which the chain is attached. Take out the small screw which holds the upper end of the chain, and let it slip through the top plate.

To fit packing.

79. If new leather packing is required, take out the six small screws holding the leathers and the iron ring 4; then remove the first leather ring without disturbing the second one, which serves only as a protection to the outer one. In replacing, fix the leather so that the holes in it will fall exactly over the screw-holes; then put on the iron ring and screw it down gradually all around so as to make a tight joint.

New valve-leather.

80. To put in a new valve-leather, unscrew the top nut of the valve and take the old one out and replace it with a new one.

To replace plunger.

81. To replace the plunger, slip the tin ring over the plunger, partly covering the leather ring to prevent its spreading. Introduce the plunger, being careful to have the chain turned in the proper direction, and then remove the tin ring. Connect the supply tube G; pull up the plunger by hand and close the faucet; the compressed air will then hold the plunger up until the upper end of the chain can be secured in place. The small weights can be put in the plunger through the opening in the top plate.

Strainers.

82. Every precaution must be taken to keep the strainers in good order. Mineral oil always contains a quantity of lint and woolen fiber, which must be carefully kept from getting into any part of the lamp.

83. For care of mineral oil, see the following insructions:

INSTRUCTIONS TO KEEPERS OF FOURTH, FIFTH, AND SIXTH ORDER LIGHTS.

Lamps.

84. The lamps are of two kinds, viz: The Hains or low-reservoir and the constant-level lamps. The Hains lamp has the oil-reservoir immediately below the burner, to the crest of which the oil is drawn by capillarity; it is in two parts—the base or stand and the oil-bowl. The constant-level lamp has the reservoir on one side of the burner and is connected with it by means of a tube through which the oil passes. The lamps should be filled nearly but not quite to the top, a little room being left to allow for the expansion of the oil when heated.

Filling lamps.

Lighting.

85. The service lamp must be placed inside the lens in its place, and then lighted. The flame must be kept low for the first half hour, in order to avoid heating the chimney too rapidly. The wick, if turned up before the chimney and burner are somewhat heated, is liable to smoke.

86. The service lamp when filled and ready for use in the evening should, if the weather is very cold, be kept in a room of a moderate temperature to prevent the chilling of the oil.

Regulating the flame.

87. The flame is chiefly regulated by raising or lowering the chimney. This must be done until the best effect is obtained. The most useful portion of the flame is

arly all above the button; the position of the button must not be changed. When ints or irregularities in the flame appear, they can sometimes be made to disappear simply turning the chimney around its axis to a new position.

88. The Hains and flat-wick lamps must be changed at midnight, as when the oil urns low it does not give so good a light. The new lamp should be lighted before e other is removed. Constant-level lamps do not need to be changed as a rule, as ey will burn with undiminished brilliancy so long as there is any oil in them. Changing lamps.

89. In extinguishing lights at sunrise, turn the wick down slowly, so as not to cool e chimney too suddenly; when very low put it out by blowing across the top of the himney; it is dangerous to blow down the chimney of a mineral-oil lamp. When the himney is taken off, keep it wrapped in flannel until cooled. Extinguishing the light.

90. To trim the lamp, after blowing out the light pour out any oil that may remain n the reservoir, then relight and let it burn out of itself, which it will do in about half n hour; then simply rub off the light ash remaining on the wick. No other trimming s required. This is the only way to get a perfectly level wick. Trimming.

91. *Under no circumstances shall oil be poured into the lamp while it is lighted, nor hall it be filled in the vicinity of any light or fire.* Care of oil.

92. No smoking shall be allowed in the oil room, nor shall any uncovered light be aken there. In case the oil catches fire, it can be extinguished more easily with sand or ashes than with water. Precautions against fire.

93. The oil must be drawn only by daylight. Under no circumstances should it be drawn at night. The cans should be kept tightly closed and the oil room cool and well ventilated. The pargetized can is furnished to stations as a vessel of supply. The oil for filling the lamps and other daily service must be drawn from it. It must be filled from the transporting or store cans whenever necessary. Drawing oil.

94. The boxes containing the transporting cans must always be kept right side up. Keepers must not put anything into empty cans. All empty cans must be turned in to the master of the supply vessel when she arrives, and a receipt taken, as prescribed by paragraph 108 of the Regulations of the Light-house Board. Care of transporting cans.

INSTRUCTIONS TO KEEPERS OF LIGHT-SHIPS.

95. The keeper of a light-ship is responsible for her efficiency in every regard. He must exact from every person on board, under his command, a strict and careful attention to duty; and must promptly report to the Inspector any derelictions on the part of any of the crew. Responsibility of keepers.

96. A log-book must be kept in which all the duties of the vessel and occurrences of importance must be noted, stating the condition of the lights, the times at which it was necessary to trim them, &c.; the length of time which intervened between the lowering and hoisting of the lantern, &c., the number of men on duty in each watch, the direction and strength of the wind, the state of the weather at 8 p. m., midnight, and 8 a. m., and, during gales, as much oftener as may be required to make a useful record; the times at which moorings were examined, and their condition; the overhauling of the hold, and in fact every item of importance with relation to the ship's duties. This log must be copied from the slate into the book by the keeper or mate, and signed by the person in charge of the watch for the time being. Log to be kept.

97. The keeper is responsible for the safety and good order of all stores, utensils and apparatus of every description. He must observe the strictest economy compatible with showing the best light possible. Care of stores.

98. A keeper must, immediately after taking charge of a new light-vessel or succeeding a former keeper, take an inventory of all anchors, cables, boats, stores, materials and supplies of all kinds; a copy of which inventory, duly signed by him, he must transmit to the Inspector. Inventory.

Account of stores.

99. The keeper must keep a daily account of all stores expended. At the end of each quarter he must send a copy of this account to the Inspector, on the blanks furnished for the purpose, with such remarks from the log as are necessary to make a complete abstract of the weather, and special occurrences during that time.

Keeper to attend to receipt of stores.

100. The keeper must attend at the receipt of all stores, and give his assistance; he must satisfy himself as to the quantity and condition of the stores received. He must make a report of the quality of the stores in the quarterly report succeeding their receipt, or must make a special report earlier if circumstances render it necessary.

Signals.

101. Keepers must frequently exercise the crews in the signals, when any are placed on board.

Keepers and mates must be able to find latitude by observation.

102. Keepers and mates must make themselves thoroughly conversant with all nautical instruments and charts on board their vessels, and must be able, at least, to find the latitude by meridian observation of the sun.

Wrecks.

103. In case of any wrecks taking place in the vicinity of a light-ship, its keeper must, if possible, learn whether the light was seen by any one on board the wrecked vessel, and whether it was recognized, and how long it was seen before the vessel struck. All other circumstances of interest must be embodied in the wreck report the keeper sends to the Inspector.

Account of passing vessels.

104. A book containing an account of the vessels passing the light-vessel must be kept, and an abstract showing the number of passing vessels in each quarter must be sent to the Inspector.

Watches.

105. The keeper must see that the watch is set and everything in order before leaving the deck at night.

106. A regular watch must be kept at all times. The pump-well must be sounded at least once during any watch at night, and in bad weather, every hour. In case the light-ship makes more water than usual, the fact must be reported at once to the keeper.

Fire-buckets and precautions against fire.

107. Fire-buckets must be kept on deck in the most convenient place for use, and when the temperature will permit, filled with water at sunset every day. They are on no account to be kept between decks at night.

108. Every precaution must be taken against fire; no matches, lighted lamps, candles or fires must be left unattended or in exposed places.

109. Two draw-buckets must be kept properly strapped and fitted (one on each side), and the end of the bucket rope made fast to the vessel when there is no wash-deck pump.

Pumps.

110. The wash-deck pump must be examined frequently, and kept in good order.

Lightning conductors.

111. The lightning conductors (if fitted with outriggers and not let down to the copper) must be rigged out and led clear of everything, every day at sunset, and rigged in at daylight, excepting in bad weather, during the continuance of which they must be kept rigged out.

Special care in bad weather.

112. In bad weather the keeper must give constant personal attendance to the affairs of the ship; he must see the spare anchor kept ready for letting go, and a proper range of cable on deck, bitted and stoppered to bring the vessel up in case she drags; and a sufficient watch must be kept to meet any emergency.

In case of dragging.

113. The deep-sea lead must be kept overboard in heavy weather, and a hand stationed by it whenever there is danger of the vessel dragging; should she drag such a distance as to deceive passing vessels in regard to their position, the lights must be extinguished and day marks carefully concealed.

Never to leave station.

114. Under no circumstances, except those of extreme and imminent danger, shall the light-keeper permit the vessel to be moved from her proper station.

Examination of chains.

115. Every month the riding-chain must be hove in, until the point where it is shackled to the bridle is above water; the chain must then be carefully examined and

its condition noted in the log. A report of any injury or bad condition must be made at once to the Inspector.

116. Keepers must be careful to vary the scope of chain according to the weather; in mild smooth weather the chain must be hove in to a moderate scope; in heavy and tempestuous weather, and in gales, it must be veered to its full scope. Varying the scope of riding-chain.

117. In case of heavy drift-ice, keepers are recommended to shackle a shot of chain from the upper hawse pipe to the riding-chain, and then veer until part of the strain comes on this chain. The chain from the upper pipe serves to cut the ice before it masses against the ship's bows. Precautions in time of ice.

118. A report of the examination of moorings, and also a report of absences, must be transmitted at the end of each month to the Inspector. Report of moorings.

119. The ballast must be moved, and the hold thoroughly cleaned out at least once in six months. Cleaning hold.

120. The ship must be pumped out daily; any water which cannot be removed by the pumps must be bailed out with buckets and swabs. Every precaution must be taken to keep the vessel well ventilated; windsails must be kept up in summer. In hot weather, awnings must be spread to keep the vessel cool between decks. Ventilation, &c.

121. Wet clothing or wet bedding must not be kept below; once a week all bedding must be carefully aired in summer, and at least once a month in winter. Care of bedding and clothing.

122. During the stormy season sails must be kept bent; they must be frequently loosed to dry when the weather will permit. When sails must be bent

123. Great care must be taken of the boats and their equipments. Boats.

124. Prompt information must be sent to the Inspector when there is danger that supplies or stores will run short. Information to be sent regarding stores.

125. The keeper is prohibited from carrying on any trade or business whatever which will take him from the light-ship, or in any way cause him to neglect his public duties. Nothing whatever shall be kept for sale on board the light-ship. Prohibition of traffic.

126. No malt, vinous, or spirituous liquors must be kept or used on board of any light-ship, except those belonging to the medicine chest, which must be reserved for cases of actual illness. No liquor to be kept or used on board.

127. The keeper must hail all vessels, which by hovering too near the light-ship may prevent the lights from being seen, and request them to keep off. Under no circumstances shall he permit any vessel to make fast to the light-ship. Vessels to be warned off.

128. Keepers shall not permit the vessels under their charge to be made a rendezvous for pilots; every proper courtesy must be shown pilots, as well as all other persons, but no undue use of the light-vessels or their boats shall be permitted to any one. Light-vessels not to be made a rendezvous for pilots.

129. The keeper and mate are prohibited from being absent from the ship at the same time; one of the two must always be on board. Either keeper or mate to be always on board.

130. Crews of light-ships will be allowed all reasonable and proper indulgences in visiting their friends and families ashore. During the milder seasons of the year, two of the crew, besides the keeper or mate, may be ashore at a time, if the ship carries a complement of eight persons all told. If but six persons or less are attached to the ship, one only, beside the keeper or mate, may be allowed to be absent. During the stormy seasons of the year, one only of the crew, in either case, shall be absent, and if the season is especially tempestuous, all hands must remain aboard as a rule; short absences only being allowed under such circumstances. Any abuse of these privileges on the part of any one must be promptly reported to the Inspector by the keeper. Regulations governing leave.

131. Keepers, mates, and crews are all required to live and mess on board the light-ships to which they are attached. No rations or provisions purchased with commutation money for rations shall be taken out of the ship. Messing.

132. Commutation, not exceeding one-third of the whole number of rations allowed on board any light-ship, may be permitted at the current contract price of the rations, Commutation of rations.

upon satisfactory assurances being given to the Inspector that this commutation money will be used in purchasing fresh provisions or fruit for the use of the messes on board, and that the money shall not be applied to any other purpose. No division of this money will be allowed amongst the individuals of the crew to make separate purchases. This commutation is only permissory, and any failure to comply with these requirements will insure the withdrawal of the permission, and subject the keeper to dismissal.

133. For care of mineral oil, see pages 12 and 13, "Instructions to Keepers of fourth, fifth, and sixth order lights."

Returns, &c.

134. The following returns shall be made by keepers of light-vessels to the Inspector:

Monthly: Mooring reports.
Fog-signal reports.
Quarterly: Expenditures of oil, &c.
Muster-roll.
Report of absences.
Pay-roll (to be sent in fifteen days before end of quarter).
Abstract of passing vessels.
Annually: Description and inventory of vessels.
Whenever necessary: Shipping articles.
Shipwreck reports.

DIRECTIONS AND INSTRUCTIONS FOR THE USE AND MANAGEMENT OF FOG-SIGNALS.

Keepers strictly accountable.

135. The keepers of stations provided with fog-signals will be held to a strict accountability for the proper care, attention to, and management of fog-signals.

Inspection of signal.

136. The principal keeper of the light station must satisfy himself, by a thorough, careful, personal examination and inspection of the engine, boiler, and the entire machinery of the fog-signal, before attempting to put it in operation, that it is in complete and satisfactory working order, and when it is not in operation all its parts must be dusted daily, and, if necessary, cleaned and wiped off. When the engine is not in operation it must be covered with a tarpaulin or canvas cover, to keep dust out of the journals and off of the friction surfaces.

Accidents to be reported.

137. In the event of accident to or derangement of any part of the machinery, unless the injury be of such a kind that the keeper is able to make the necessary repairs himself, it must be reported immediately to the Light-House Engineer or Inspector of the district, accompanied by such detailed report as will enable the officer to whom the report is made to provide the necessary assistance and materials for putting the fog-signal in efficient working order in the shortest time. Hand force-pumps with pipe connection cocks, &c., should be provided for every steam fog-signal boiler.

Cleanliness and care.

The engine-room must be kept clean, the unpainted parts of the machinery kept free from dust, dirt, and rust, and the painted parts wiped dry at all times and well oiled. No dirty waste, cotton, or woolen rags, or cloths saturated with oil, are to be left in boxes, corners of the room, or elsewhere, where they might become ignited from spontaneous combustion, but when the wiping off of the engine and machinery has been finished, these articles are to be thrown into water in buckets for washing, or, if unfit for further use, to be thrown into the furnace of the boiler to be burned.

Machinery in operation never to be left.

138. Whenever the apparatus is in operation, a keeper must be in the engine-house, in charge, and awake. It will not answer to leave the machinery alone for a single moment. If it should be necessary for the keeper immediately in charge to quit the engine-house, some competent person must temporarily relieve him.

Firing up.

139. Should the steam-boiler have a heater attached to it for keeping the water in it warm preparatory to raising steam, fire should be made under it as soon as there is

any indication of a necessity for using the fog-signal, which fire must be continued, with the draught so regulated as to raise the temperature of the water in the boiler from 190° to 210° Fahrenheit as speedily as possible. The water being at this temperature fire should be cautiously made in the furnace as soon as it is seen that the fog-signal will be required, and when there is sufficient steam for operating the fog-signal effectively and continuously, according to its distinguishing character, it should be put in motion. The time, state of the weather, &c., should be duly noted.

Preparatory precautions.

140. Whenever the fire is allowed to go out, or is drawn from the boiler, the furnace and ash-pit should be thoroughly cleaned, kindling wood placed in the furnace, and everything made ready for lighting when it shall be again needed. In starting the "getting up steam" in the boiler, the fire should be controlled to burn moderately, and the safety-valve kept open until the steam escapes freely, when the valve may be closed and the fire permitted to burn to full activity.

Precautions during cold weather.

141. In cold weather, with indications of fog or snow, the water in the boiler should be kept at 190° to 210° Fahrenheit by the heater; but great care must be taken in firing not to force the heater so much as to run the risk of so rapidly evaporating the water as to burn it.

Connecting pipes to be examined.

142. After the heater is in full action, there will be nothing to fear in "forcing" the heater, if the connecting pipes are of proper size and clear. These pipes should be occasionally examined to see that they are unobstructed.

Obstructions.

143. If in any case the attendant finds the temperature increasing in the heater, so that steam is making, and there is no increase of temperature of the water in the boiler, there will be reason to apprehend that there is some obstruction in the circulation between the heater and the boiler, and the fire should be hauled or allowed to die out in the heater, the fire having at the same time been started in the boiler. As soon as the use of the boiler ceases for the occasion, an examination should be made, to ascertain if any, and what, obstruction there was to the circulation. When heaters are not provided, the above results may be obtained by banking the fires in the fog-signal boiler.

Oiling.

144. While the keeper is getting up steam, he must be careful to oil all the working parts of the machinery, and by close inspection see that all the oil-holes are clear, and that they take oil freely. As often as once a month (as there may be opportunity) the several wearing parts must be taken apart and carefully cleaned and oiled.

Quantity of water.

145. At all times, while the engine is in operation, see that there is, as near as may be, in boilers of the locomotive type, two cocks of water, and in upright boilers one and a half cocks. The aim should be never to have less than two cocks of water in the former or one in the latter.

Foaming.

146. Should the water in the boiler foam, prime, and rise at any time while the signal is in operation or while raising steam, shut off for a few moments for the foaming to subside, then ascertain the quantity of water left in the boiler, when open again and increase the quantity of feed water to supply deficiency. If the boiler shows a disposition to foam or prime, the valves should not be opened suddenly but gradually, or if necessary to open suddenly for short blasts, it should be closed quickly before the foam can rise to obstruct the flow of steam. (In the whistle-machines the opening of the whistle-valve is always sudden, and cannot be closed except suddenly, and after the full duration of the blast, without changing the characteristics of the signal.)

Feeding foaming boilers.

147. Boilers that foam must be pumped up or fed with great care, yet observing the safer course of pumping enough, and never allowing the water to get out of sight. If it should occur that, from any cause, the water should fall below the gauge-cocks and glass, do not haul fires, and do not put on the feed, or change any valve, nor open the safety-valve, but charge the furnace full of the finest coal at hand, so as to completely deaden the fire, leave the fire-door open and close the damper partially. Keep everything in this condition till the boiler cools off, occasionally sprinkling water on

the fire, if necessary, to keep it deadened. After the boiler has cooled down, refill the water to the proper height, examine to ascertain if the pump is out of order, or from what cause the water has fallen too low in the boiler, clear out the furnace, recharge with kindling, and prepare everything for again lighting fires.

Gauge-cocks. 148. The gauge-cocks must be kept in good order at all times, and while the machine is in operation, or steam raising for work, they must be frequently tried. They must be kept open, and answer properly whenever tried. The glass gauge must not be wholly depended upon.

Glass gauge. 149. The glass gauge must be frequently "blown out," to see that all the passages and valves are clear.

Safety-valve. 150. The safety-valve must be kept in good working order at all times, and be frequently examined while the machine is in operation. The safety-valve must be taken apart once a month, to see that it is in good order and clean, and that it works freely.

Pumping. 151. Regular and continuous pumping is essential to the economical consumption of fuel, which can be easily done by giving a little attention, and by partially closing the cock in the pipe which supplies the pump, but no pipe between the pump and the boiler should be closed at all. A few trials will enable the keeper to determine the proper point at which the supply-cock should be closed, which point, when satisfactorily ascertained, must be marked, to serve as a guide afterwards. The keeper must not rely upon the fact that the valve is open which supplies the water to the pump, but must frequently examine the glass gauge and try the gauge-cocks, as, although the supply-valve to the pump is open, the pump may cease working, and the fact not be discovered till the water is too low in the boiler.

Regulation of draught. 152. The furnace-door should be kept closed as much as possible, governing the fire mainly by the damper in the chimney. While firing, and during work, keep the ash-pit door open, but close it when work ceases.

153. The furnace-doors of tubular boilers must not be opened wide for "cooling down." The sudden admission of cold air will contract the tubes too suddenly and fracture them, causing leaks; but they may be partially opened to aid in cooling down the boiler.

Daily attention to ash-pit, boiler, and flues. 154. The space below the grate-bars in the ash-pit must be kept free from ashes and cinders; should they be allowed to come in contact with the grate-bars they would soon melt. When the engine is at work, the ash-pit must be cleaned out at least as often as once a day. The boiler and flues should be brushed clean daily, if possible, and although no positive rule can be laid down for periodical cleaning, it must not be forgotten that they are never to be foul. After 30 or 36 hours' firing (and oftener if the draught is found to be sluggish), the necessity for brushing out the flues, to remove ashes and soot, will be apparent. When the engine is stopped, clean the boiler and flues and put everything in order at once for starting the signal again.

Difference between pressure-gauge and safety-valve. 155. In case there should be at any time a difference in the indications of the steam-pressure gauge and the safety-valve, lose no time in ascertaining the cause and apply the proper remedy to the defective instrument at once.

Quality of water. 156. As the water used in the boilers may be of a different quality at different stations, special attention should be given to it. When the water used holds salts in solution, or mud, or sediment in suspension, more frequent blowing off will be necessary than if the water is pure and entirely free from those impurities. Care and good judgment are required in the management of boilers under these circumstances; but, above all, it is necessary to be very careful to prevent the deposit of mud, lime, salt, or other solid matter in the bottom of the boiler, inasmuch as such deposits endanger both life and property. Deposits of mud will be readily seen by its accumulation about the gauge-cocks and by the "spatter" from the cocks being foul.

Water-blow. 157. The "water-blow" should be opened once in twelve hours, if but for a moment, simply to start the sediment, and longer if the water "blows foul," taking care, how-

ever, to shut the valve or cock before the water is too low in the boiler. Do not leave the blow-cock for an instant, while open, but be sure to shut before leaving it.

158. In case sea water is necessarily used continuously, frequent but light blowing off should be resorted to, in preference to occasional exhaustive blowing off, as the latter course necessarily prevents uniformity of work by the engine. Sea water.

If sea water is used, blow off, for a short time, every two hours, and as often as the boiler is cooled down and opportunity offers. Open the boiler and examine the tubes to see if there has been any scale or deposit made upon them; if so, the amount of water blown off has not been sufficient and must be increased.

159. When fresh-water tanks are furnished, from which the boiler can be refilled without the use of a pump, the boiler should be blown out at the end of any protracted fog, but care should be taken to fill the tank before the blowing out. Fresh water.

160. Instructions as to the pressure of steam to be used will be given by the district officers. Pressure of steam.

161. Great care must be exercised to avoid the effect of freezing weather. Fire must be constantly kept in the heater; all the pump "pet-cocks" must be kept open. If the weather is very severe it will be well to keep low steam (say five to ten pounds) on the main boiler, keeping the temperature in the engine-house, if possible, sufficiently high that a thermometer at the floor will not fall to the freezing point. Freezing.

162. When the apparatus is to be laid up for the winter, be sure that the water is all out of the pipes; leave all cocks open; take off the pump-doors and the check-valve cap; empty the tank. Winter precautions.

163. In firing with anthracite coal, the bed of fuel should be as thin as can be carried, so that there are no holes for cold air to pass through the fuel; as a rule, the smaller the coal, the thinner the fire. With bituminous coal, the fire must be thicker, to avoid air holes through it; also if the bituminous coal is "binding" coal, that is, runs or binds together, it must be occasionally broken or lightened up, with the "slice-bar," to keep the fire open. A well-constructed steam-boiler is fitted to do its work best when consuming a certain fixed quantity of fuel (coal or wood). Above or below this point there must be more or less waste, and there is as much above it as below it. Use of anthracite.

164. Haul all fire always before blowing down, and be careful to see that no fire is left under the boiler when blowing down is commenced. Keep the furnace and ash-pit doors closed to prevent too sudden cooling of the boiler and the consequent fracture by too sudden contraction of the tubes. Hauling fires.

165. See that the cylinder waste-cock is open, and all the water in the cylinder from condensed steam is removed before starting the engine. As soon as the engine becomes warm, attend to the pump and see that it works well, to prevent any detention on account of a want of a proper quantity of feed water. Starting engine.

166. When there is no longer necessity for working the engine, open the drip-cock of the steam-cylinder (and in cold weather open also the cocks in the pipes) to allow all the water to run out of them to prevent damage by freezing. Stopping engine.

THE SIREN.

167. The following-named parts of this fog-signal are shown in Plate 7. Description of boiler.

Figure 1 is a top view.

Figure 2 is a front view.

1. Gauge-cocks.
2. Water-gauge.
3. Safety-valve.
4. Man-hole.
5. Heater.
6. Feed and circulation pipes between heater and boiler.
7. Cylindrical chamber, provided with steam-ports, passages, and sleeve 11,

10. Flange, provided with ball-shaped collar.
12. Brass nut.
13. Stuffing-box.
14. Siren-shaft.
15. Siren.
16. Pulley on siren-shaft.
17. } Collars on siren-shaft.
18. }
19. Bearings for siren-shaft.
20. Siren-valve.
21. Wheel in gear with 20.
22. Shaft for opening and closing 20.
23. Lever connected with pitman-rod.
24. Pitman-rod.
25. Lever for closing 20.
26. Steam-gauge.
27. Trumpet.
28. Pulley on fly-wheel shaft.
29. Pulley on worm-shaft.
30. Worm.
31. Worm-wheel.
32. Carrier on 31.
33. Roller on 24.
34. Steam-valve for engine.
35. Governor.
36. Pet-cock.
37. Feed-pump.
38. Air-cock.
40. Suction-valve.
41. Discharge-valve.
42. Air-vessel.
43. Safety-valve for feed-pipes.
44. Stop-cock.
45. Elbow on blow-off pipe.
46. Blow-off cock.
47. } Unions on 6.
48. }
49. Elbow on 6.
50. } Elbows on steam-pipes.
51. }
52. Elbow on 6.
53. Cross on 6.
54. Elbow on 6.
55. Elbow on 53.
56. Elbow on 40.
57. Elbow on exhaust-pipe.
58. }
59. } Elbows for water-gauge.
60. }
61. Tee between 71 and 67.
62. Union between 34 and 35.
63. Governor-pulley on fly-wheel shaft.
64. Governor-pulley on governor-shaft.

65. Fly-wheel.
66. Oil-cup for siren.
67. Stop-cock for hand-pump.
68. Union between 67 and hand-pump.
69. Union on blow-off pipe.
70. Check-valve.
71. Union between 42 and 61.
72. Union for suction-pipe.

Through chamber 7 passes the shaft 14, upon one end of which the siren 15 is screwed and held in place by a lock nut.

On the other end of the shaft is placed a pulley (16), which is rigid, and motion is imparted to it by the fly-wheel of the engine. The collars 17, 18, keep the shaft in position. After loosing the collars the siren is regulated by bringing it as near as possible to the surface of the chamber, but not so near as to impede the movement by means of the set-screw of collar 18, which is rigidly secured to the shaft. The siren-shaft runs through both bearings 19, and through chamber 7, as above described.

The bearings are provided with lubricators filled partially with cotton, which, after being pressed tightly against the shaft, are saturated with oil. Two additional oil cups are provided for the shaft on the casing of the siren. The person in attendance must take special care to see that the shaft is always well supplied with oil.

In the shell of chamber 7 is a valve (20) which opens and closes the steam-ports. That valve is provided at its lower end with teeth which come into gear with the wheel 21. This wheel is on shaft 22, and motion is imparted to it by the lever 23 and the pitman-rod 24, which extends to the engine. Lever 25 is raised by means of a weight and thereby the valve is closed. A flange (10) is provided with a ball-shaped collar, which permits the downward movement of the trumpet 27, and furnishes a steam-tight connection with it.

Description of engine.

168. A pulley (28) is on the fly-wheel shaft. The motion is transmitted from this to another pulley (29), which is placed on the same shaft with a worm (30). This worm imparts motion to the worm-wheel 31 to which is secured a carrier (32). This carrier pulls the pitman-rod 24 downwards, and causes the opening of the valve 20 whenever it comes in contact with a roller (33) placed at the lower end of the pitman-rod. The pet-cock 36 must be opened on starting the engine, and must remain open until there is no water in the cylinder. It must also be opened when the engine is stopped.

The air-cock 38 must be opened whenever the pump is not required to feed. For the purpose of accelerating the suction of the pump, after it has been idle for some time, the air-cock and the water-cock are to be opened and water introduced into the pump through the latter until it reaches the air-cock. Then both cocks must be immediately closed.

By the safety-valve 43 the bursting of the feed-pipe is prevented, in case the stop-cock 44 should be closed. The stop-cock should always be open, and may only be closed in case it should become necessary to inspect the pump-valve while the pump is in operation, or the boiler water is blown off. The blow-off cock 46 is always closed except when it is necessary to blow off. The cock 67 stops the feed-pipe from the hand-pumps, and is opened when the boiler is to be fed by the latter.

Starting.

169. The pressure of steam having reached twenty pounds, the engine and siren may be put into operation and continued.

Pressure.

170. The steam pressure should be maintained uniformly as nearly as possible at seventy pounds, and never, if it can be avoided, to exceed eighty pounds.

Valve-gear.

171. In case of disarrangement of the valve-gear inside of the stand-pipe of the siren, take off the hand-hole plates, and see that the defects are remedied; that everything is secure inside, and that the keys and pins are in place.

THE STEAM-WHISTLE.

Description of plates.

172. The following parts of this instrument are shown in Plate 8.

A. Steam-drum.
B. Stand-pipe.
C. Chimney.
C′. Damper.
1. Gauge-cocks.
2. Water-gauge.
3. Safety-valve.
4. Steam-pipe for engine.
5. Throttle-valve for engine.
6. Steam-cylinder.
7. Piston-rod.
8. Connecting-rod.
9. Fly-wheel shaft.
10. Crank.
11. Fly-wheel.
12. Cam-wheel shaft.
13. Slide-valve rod.
14. Slide-valve connecting-rod.
15. Slide-valve eccentric.
16. Vibrating eccentric.
17. Vibrating connecting-rod.
18. Vibrating ratchet-arm.
19. Ratchet.
20. Ratchet-wheel.
21. Cam-wheel.
22. Cam.
23. Cam-wheel arm.
24. Cam-wheel arm-shaft.
25. Whistle-valve lever, exterior.
26. Whistle connecting-rod, exterior.
27. Whistle-valve lever, exterior.
28. Whistle-valve lever, interior.
29. Whistle connecting-rod, interior.
30. Whistle-valve.
31. Valve seat and steam-outlet.
32. Steam-whistle.
33. Governor-pulley on fly-wheel shaft.
34. Governor-pulley on pulley-shaft.
35. Governor.
36. Pressure-gauge.
37. Pump eccentric.
38. Pump.
39. Steam-pipe for auxiliary pump.
40. Auxiliary pump.
41. Feed-pipe.
42. Suction-pipe.
43. Friction-wheel.
44. Hand-lever.
45. Exhaust-pipe.
46. Drip-pipe.
47. Hand-hole.
48. Hand-hole.

Firing up. 175. During the time of firing up, let the crank of the engine point towards the furnace-door.

Height of fuel. 176. Keep the fuel upon the grate at a uniform height, and never allow it to touch above the linings.

Ashes and dirt. 177. The ash-pit under the grate must be kept free from ashes and other dirt.

178. Ashes and dirt collected in the jacket around the cylinder should be cleaned out once each week; this can be done through the narrow door or loose plate under the ash-pit.

Starting. 179. The starting is effected by working the fly-wheel about half round by the starting-bar. Watch closely after lighting the fire, and start as soon as the engine will work. The time when it will work can be determined only by attempts to start it. If not started at the proper time, and too much delay takes place, the heater will be destroyed.

Stopping. 180. The engine is stopped by opening the exhaust-valve on the top of the cylinder; keep this valve open until the engine is at rest, and open the furnace-door before stopping.

While at rest. 181. While at rest, the furnace-door must be kept open, and the wheel turned so as to bring the piston full out; if this is not done, as directed, the heater will be destroyed.

Oiling, &c. 182. The cylinder is best greased with a swab dipped in melted tallow. The journals, and all joints and bearings, must be oiled with good clean oil. Never put oil upon the stem of the exhaust-valve.

Use of damper. 183. By the damper, combustion may be checked or increased, and the power of the engine governed thereby.

Inspection. 184. A thorough examination, both internal and external, must be made at intervals of two months, so that a correct knowledge of the condition of the motor may be had.

New packing. 185. When new leather packing is needed for the piston, cut a ring of good stout calfskin, one-half inch larger in diameter than the bore of the cylinder; this must be attached to the piston in the same manner as the old one was, with the flesh side of the leather turned outward towards the cylinder. In case the piston is too large, when the packing is new and cannot readily be put in the cylinder, make a very light fire in the cylinder, so that it may be expanded; but use great care, and do not get it so ho as to burn the leather.

Stuffing-box. 186. The stuffing-box through which the piston-rod works should be screwed modt erately tight only. Lamp-wick, or any other elastic material, will answer for packing.

The trumpet. 187. The reed or tongue is the most delicate part of the trumpet. The trumpet needs only to be kept clean and free; any fracture which may occur from excessive vibration may be repaired with hard solder by the visiting mechanic.

Fitting of reed. 188. The tongue or reed should be fitted so as to get a satisfactory tone—if too flat, make the point thinner; if too sharp, make the back end thinner. By trial, the best results can be soon obtained. Also, try different reeds of different pressures; and use that pressure which gives the best tone with each particular reed. Duplicate reeds will be furnished at all times when needed by application to the proper authorities, and the station should never be without two or more in store.

STEVENS FOG-BELL STRIKING APPARATUS.

189. The following-named parts are shown in Plate 10:

1. } Striking pallets.
2. }
3. Guide for pallets.
4. Drum.
5. Rachet-wheel or striker-wheel.
6. Rachet-wheel or striker-wheel (small).
7. Drum-pawl.

8. Wire rope with weight attached.
9. Center shaft.
10. Balance-lever.
11. Balance-lever arm.
12. Balance-lever arm to bell.
13. Connecting-rod to bell.
14. Lever on hammer-shaft.
15. Hammer-shaft.
16. Hammer.
17. Spring.
18. Frame.
19. Lock-lever.
20. Lock-arm working in wheel 21.
21. Lock-wheel.
22. Lock-trigger.
23. Cam-lever.
24. Cam on cam-lever.
25. Cam-lever weight.
26. Pin-wheel.
27. Clock-work.
28. Pendulum.
29 and 30. Gear-wheels.
31. Winding-crank.
32. Motion-weight for clock-work.

190. Keep the machine clean and free from dirt and rust in all its parts. This can only be done by constant care and attention, in wiping with waste or cloths which are slightly saturated with oil; care must be taken not to use so much oil that passing particles of dirt will adhere to the surface. Cleanliness and care.

Care must always be taken to keep the machine as dry as possible, by stopping closely the opening in the side of the room or ceiling through which the connection between the hammer and the machine passes, so as to prevent rain or spray from passing in and wetting the machinery.

191. Before starting the engine, be sure that the machinery and the hammer are well oiled in all bearings and points of contact where friction exists by one surface moving upon another with some pure lubricating oil. Oiling.

Upon the clock-work, which regulates the intervals between strokes, a fine oil, such as is used upon clocks, would be preferable. Avoid putting on too much oil, for by that means the machinery and surroundings will become filthy, and catch and retain all flying particles which come in contact with it; yet be sure that enough oil is always on, so that the parts may not run dry and cut. Never leave this machine alone while running. Some competent person must be in constant attendance upon it, to rectify any irregularity and prevent accidents which might occur.

192. Always remove the winding-crank as soon as the machine is wound up, and see that no obstruction is in the way of the weight, whereby it might be prevented from acting equally at all times upon the machine. Winding.

193. Be sure that the hammer and the rod connecting it with the machine does not come in contact with any of its surroundings during the operation of striking. Hammer and rod.

194. If any part or parts of the machine are to be removed for cleaning or repairs, be sure always to run down or support the driving weight of the machine. Never disconnect any part of the machine until this weight is secured, so that it will not operate it. Removing parts.

195. Never let the wire rope which supports the weight which actuates the machine rub or chafe against any surrounding parts. Regulation of weight.

In case the clock-work has not enough power to throw off the falling lever or cam which liberates the striking weight, move the brass weight which actuates the clock-work farther from the center and toward the end of the lever. This will increase the power, and, moving the weight toward the center will diminish the power.

If the falling lever operated by the pins falls, but does not have the power to liberate the striking levers, the power may be increased by moving the brass weight toward the outer end of the lever, and if the weight is too great, move the weight toward the center or fulcrum of the lever.

Before making any alterations in the machine it would be well to examine it thoroughly, and see if the difficulty does not arise from some cause independent of the machinery.

Do not use any more weight to drive the machine than will give a good sharp blow or give the best result in tone and loudest sound from the bell struck.

The sections of the weight furnished weigh one hundred pounds each, except the section which has the hook attached, which is heavier. Three hundred pounds will strike a sharp blow, and four hundred pounds a very hard blow; proportion the weight and blow to the size of the bell to be struck.

"ANDERSON'S" HAND FOG-SIGNAL.

Cleanliness and care.

196. This instrument should be kept clean in all its parts.

Avoid bruising or indenting the cylinders.

Should such accident occur, introduce a round piece of smooth wood, as large in diameter as the cylinder will admit, and with a small, round, hard stick rub and press the indented part until restored to its original form as near as possible. Avoid drawing the metal, which would permanently injure the instrument.

Use great care to keep sand and all similar substances out of the instrument.

Reed.

197. As long as the instrument gives good tone, do not meddle with the tongue or reed in any other way than to wipe and keep it clean. Observe when the instrument is in good order the position of the reed relative to the reed-seat; then, should accident occur to the reed, put it in the same relative position as it was originally, and try the tone of the instrument. This need only be done when no duplicate reeds are in store. When duplicates are at hand, replace the injured one with a new one, and preserve the injured one, that it may be repaired.

Packing of piston.

198. The packing upon the lower end of the piston-cylinder can be renewed when worn with lamp-wick or other similar material, which material should be filled with clean tallow when applied to the piston.

INSTRUCTIONS FOR PAINTING.

Inside work.

199. The whole interior of the light-house lanterns (dome, astragals, ventilators, smoke conductor, &c.), is to be painted white, and must be kept clean, free from soot and grease, and the white paint renewed as often as necessary.

The paint may be kept clean and free from soot and grease by occasional scrubbing and washing with clear, soft hot water and soap, followed by clean water. If from bad ventilation, neglect, or from any other cause, the interior of the dome, the astragals, &c., have become very dirty, and the soot and grease cannot be removed by scrubbing with hot water and soap, then the lye of wood ashes (oak or hickory) will remove it. In case lye cannot be had, then it may be washed with strong lime water, which will answer nearly as well as strong lye. Lye is not, however, to be used in cleaning wood-work for painting or repainting.

In painting outside work the color must not be changed from that previously existing. (See paragraph 63 of the Regulations of the Light-House Board.)

200. Paint will not adhere to and dry upon wood or metal which is not perfectly clean and entirely free from soot and grease. Outside work. Preparation for painting.

Soot must be removed by brushes and cloths or towels, and by washing with hot soft water and soap.

Oil and other grease on wood work must be removed by the use of spirits of turpentine and a worn or other stiff brush, rubbing the part vigorously until the stains are removed. When the above means have been resorted to without entire success, mix a thin whitewash, strain it, and give the parts to be painted a coat of it with a paint brush. When this whitewash becomes thoroughly dry, take a clean brush and with it remove all the whitewash, and the parts thus treated will be in proper condition for receiving the paint.

Iron, brass, copper, &c., must be cleaned so as to present a smooth surface. All blistered and cracked paint, and all rust on iron, must be carefully removed and the parts smoothed before putting on the paint.

201. A mixture prepared by the following recipe will remove paint from old iron: Removing paint from old iron.

Dissolve two pounds of potash in a bucket of water, add about one and a half pounds of slacked lime, and stir it well.

With a mop apply this mixture to the paint, and after a few minutes it may be easily removed by scraping.

As rapidly as the old paint is scraped off, rinse the iron with fresh water, and dry it. This will leave the iron clean and bright.

202. Take the necessary quantity of paint from the keg and mix spirits of turpentine with it until it is of the consistency of cream; then put in patent drying or Japan varnish in the proportion of one gill for each gallon of paint, and mix the paint, turpentine, and drying well together—the paint will then be ready for immediate use. When the paint in the paint bucket becomes thicker than cream, it must be thinned by adding small quantities of spirits of turpentine, and it may be necessary to add also a very small quantity of boiled linseed oil at the same time to increase its drying qualities. Preparation for inside work.

Black paint for inside work will be greatly improved by mixing it with spirits of turpentine and copal or coachmakers' varnish. The varnish will give the paint when dry a gloss.

Black paint for inside work may be prepared with dry lampblack, mixed with copal or coachmakers' varnish and then thinned to the consistency of cream with spirits of turpentine. One pound of fine lampblack will require about half a gallon of varnish to prepare it to receive the spirits of turpentine.

No oil is to be mixed with paint which has been ground in oil in preparing paint for inside work.

Red lead is put up dry. Quantities required for immediate use only are to be mixed. If not used immediately after being mixed, it becomes hard and unfit for any use.

203. Paints for outside work are to be mixed with boiled linseed oil and the necessary quantity of patent drying or Japan varnish. Preparation for outside work.

Black paint for outside work may be mixed with boiled linseed oil and copal or coachmakers' varnish.

No spirits of turpentine is to be used in mixing paints for outside work.

Iron work which has been neglected and rusty should be thoroughly cleaned by scraping and polishing, and then primed with one or two coats of red lead before the paint of the required color is put on.

Raw linseed oil is, as a general rule, only used for priming new wood work.

204. For gray or lead color add lampblack (or black paint ground in oil) in small quantities to white paint, ground in oil, until the desired shade is obtained. Hints for mixing paints.

For yellow paint, chrome yellow and yellow ochre are in general use.

For straw color or buff: to chrome yellow or yellow ochre add, in small quanti-

ties at a time, white paint (ground in oil) until the desired shade is obtained, to which a small quantity of Venetian red may be added to soften the yellow gloss.

For brick color, mix yellow paint, red lead, and a small quantity of white paint.

Oak-wood color may be made with three-fourths of white paint and one-fourth of umber and yellow ochre. The proportions of umber and yellow ochre will be determined by the desired tint.

Portland-stone color is made with umber, yellow, and white paint.

In mixing all paints it must be remembered that the quantity of drying is to be in the same proportion, and that for inside work, or work not exposed to the weather, spirits of turpentine is to be used for thinning, and for outside work, exposed to the weather, oil is to be used without turpentine.

The following materials may be mixed with the paints as driers:

Patent drying, paste.

Japan varnish, liquid.

Litharge, in powder.

When litharge is used as a drier, it must be reduced to a fine powder; then, by means of a little oil, made into paste, and finally mixed thoroughly with the paint before using it.

Paint-brushes.

205. Paint brushes are round and flat, and of different sizes. Round brushes vary from one to two and a half inches in diameter.

The large paint brushes are used for putting on priming and in painting over large surfaces, which require considerable quantities of color.

The small brushes are used for parts to which the large brushes, from their size, cannot be applied.

Flat brushes are used for sashes, for varnishing, and for painting in lines or narrow spaces.

When the bristles of a brush get loose, drive a few thin wedges of wood inside of the binding twine or thread, which will render the whole fast again.

A different brush should be used for each color.

Brushes which have been used must not be left to dry with the paint in them. They should be put into a paint pot, or old paint keg, with sufficient water to come within half an inch of the binding of the brush. Care must be taken not to have too much water in the paint pot or keg, for if the binding of the brush is left in the water it will soon rot, and the brush will be useless. When short of brushes, they may be washed in oil or spirits of turpentine, and finally with soap and water, so as to render them fit for use in any color. The oil and spirits of turpentine used in washing brushes will do for mixing paint of the same color of the paint washed from the brushes.

Care of paints.

206. Paints of all descriptions must be put up in the best manner, and kept in a dry place.

Dryings, varnish, &c., must be kept in bottles or tins.

When a part of the paint is taken from a keg (ground in oil) the residue is to be covered with water to the depth of one or two inches, at least, and then the head of the keg is to be put in tightly. The paint must not be left to dry, nor exposed to the air or weather.

Putty must be put up and kept in bladders, under cover, and not exposed either to the sun or weather.

When too hard for use, it may be softened by mashing and rolling in the hands, aided by the addition of a little linseed oil.

To make putty: to four-fifths of pulverized Spanish whiting add one-fifth linseed oil, and work it into a paste.

Hints as to putting on paint.

207. In painting, durability is to be the first consideration.

The parts to be painted must be clean, smooth, and free from grease. All holes, cracks, nail-heads, &c., must be filled in with putty. If the wood is new, the first

coat should be put on thin, to serve as a priming. If new iron, then a thin coat or two of red paint should be put on as a priming.

A second coat of paint is never to be put on until the previous one is thoroughly dry and hard, which will never be the case whilst the least stickiness is felt on applying the hand to it.

Each coat should be of the same thickness throughout, otherwise the work, when done, will have an unfinished and slovenly appearance.

Paint put on too thin, after priming, will crack in drying; if put on too thick, it will blister, wrinkle, and peel off.

In using the brush, where there is sufficient space, long strokes should be employed to extend the color in a smooth and uniform manner; where the space is contracted or rough, the paint should be laid on in dabs, for the purpose of getting it into the recesses and places where the surface is unequal.

Sash brushes and pencils should not be dipped into the paint pots, but a small quantity of the paint should be placed upon a clean board, a piece of tin, or glass, to serve as a palette—the brush or pencil can then be worked into the paint, and fine lines drawn with it; but if dipped into the paint pot, the exterior of the brush only will be covered with paint, with which it will not be possible to do nice work.

RECIPES.

WHITEWASH.

208. The following recipe for whitewashing has been found by experience to answer on wood, brick, and stone, nearly as well as oil paint, and is much cheaper:

Slake half a bushel of unslaked lime with boiling water, keeping it covered during the process. Strain it and add a peck of salt, dissolved in warm water; three pounds of ground rice put in boiling water, and boiled to a thin paste; half a pound of powdered Spanish whiting, and a pound of clear glue, dissolved in warm water; mix these well together, and let the mixture stand for several days. Keep the wash thus prepared in a kettle or portable furnace, and when used put it on as hot as possible, with painters' or whitewash brushes.

CEMENT-WASHING THE OUTSIDE OF LIGHT-HOUSE TOWERS.

209. Take of fresh Rosendale cement three parts, clean sand one part, and mix them thoroughly with fresh water. This will give a gray or granite color, dark or light, according to the color of the cement. If a brick color is desired, add enough Venetian red to the mixture to produce that color. The cement, sand, and coloring matter must be mixed together. If white is desired, the walls, when new, should receive two coats of cement-wash, and then whitewash. After the work has received the first coat, a single coat every three or four years will be sufficient.

It is best to thoroughly dampen the wall with clean fresh water, and follow immediately after with the cement-wash. This course will prevent the bricks from absorbing the water from the wash too quickly, and will give time for the cement to set. Care must be taken to keep all the ingredients of the cement-wash well stirred during the application of it.

The mixture must be made as thick as it will admit of to be conveniently put on with a whitewash brush.

TO PURIFY RAIN WATER AT LIGHT-HOUSE STATIONS.

210. Water contaminated with chloride of lead from salt spray resting on the leads of light-houses, &c., whence rain water is collected, does not lose its poisonous qualities either by boiling or by exposure to the air.

To purify this water, and render it perfectly fit for all culinary and domestic purposes, it will only be necessary to put some powdered chalk or whiting into each cistern in which such rain water is collected, and to stir it up well, occasionally, after rain has fallen.

ALLOWANCES OF PROVISIONS.

211. At certain unusually isolated light-stations an allowance of provisions is granted by the special authority of the Light-House Board in each case.

A similar allowance, but necessarily greater in amount, is granted to the master and crew of light-vessels.

The articles are furnished in accordance with the following tables of allowances:

Table of quarterly allowance per man for vessels of the Light-House Establishment.

Pork	45 pounds.	Coffee	6 pounds.
Beef	45 pounds.	Butter	3¼ pounds.
Flour	20 pounds.	Beans or pease	2½ gallons.
Rice	10 pounds.	Vinegar	¾ gallon.
Raisins	6½ pounds.	Molasses	¾ gallon.
Ship biscuit	65 pounds.	Pickles	6 pounds.
Brown sugar	14 pounds.	Potatoes	2½ bushels.
Tea	1⅜ pounds.	Onions	1 bushel.

Table of annual allowance per man for light-stations and fog-signal stations.

Pork	200 pounds.	Coffee (green grain)	24 pounds.
Beef	100 pounds.	Beans or pease	10 gallons.
Flour	2 barrels.	Vinegar	4 gallons.
Rice	50 pounds.	Potatoes	2 barrels.
Brown sugar	50 pounds.		

[To Face Page 30, Instructions to Light-Keepers.]

At its meeting of December 3, 1883, the Light-House Board amended Paragraph 211 of the Instructions to Light-Keepers so as to read as follows:

Table of weekly allowance per man for vessels of the Light-House Establishment.

Beef, corned	2	pounds.	Sugar	2	pounds.
Beef, preserved	1½	pounds.	Molasses	½	pint.
Pork	2	pounds.	Coffee	7	ounces.
Codfish	2	pounds.	Tea	1¾	ounces.
Flour	4	pounds.	Butter	8	ounces.
Pilot bread	2½	pounds.	Vinegar	½	pint.
Rice	½	pound.	Pickles	½	pound.
Beans	1½	pints.	Tomatoes	12	ounces.
Potatoes	12	pounds.	Dried apples	4	ounces.
Onions	2	pounds.			

Table of annual allowance per man for light-stations and fog-signal stations.

Beef	200	pounds.	Potatoes	4	bushels.
Pork	100	pounds.	Onions	1	bushel.
Flour	1	barrel.	Sugar	50	pounds.
Rice	25	pounds.	Coffee	24	pounds.
Beans	10	gallons.	Vinegar	4	gallons.

At the request of the master of the vessel or keeper of the light-station, these quantities may be changed, some being increased and others diminished, provided the total cost of the ration is not thereby made greater.

TABLES OF KEEPERS' SALARIES.

$1,000 PER ANNUM—$250 PER QUARTER.

FIRST QUARTER. (January, February, March.) 90 days.				SECOND QUARTER. (April, May, June.) 91 days.				THIRD AND FOURTH QUARTERS. (July, Aug., Sept., & Oct., Nov., Dec.) 92 days.			
DAYS.		DAYS.		DAYS.		DAYS.		DAYS.		DAYS.	
1	$2 78	47	$130 56	1	$2 75	47	$129 12	1	$2 72	47	$127 72
2	5 56	48	133 33	2	5 49	48	131 87	2	5 43	48	130 43
3	8 33	49	136 11	3	8 24	49	134 62	3	8 15	49	133 15
4	11 11	50	138 89	4	10 99	50	137 36	4	10 87	50	135 87
5	13 89	51	141 67	5	13 74	51	140 11	5	13 59	51	138 59
6	16 67	52	144 44	6	16 48	52	142 86	6	16 30	52	141 30
7	19 44	53	147 22	7	19 23	53	145 60	7	19 02	53	144 02
8	22 22	54	150 00	8	21 98	54	148 35	8	21 74	54	146 74
9	25 00	55	152 78	9	24 73	55	151 10	9	24 46	55	149 46
10	27 78	56	155 56	10	27 47	56	153 85	10	27 17	56	152 17
11	30 56	57	158 33	11	30 22	57	156 59	11	29 89	57	154 89
12	33 33	58	161 11	12	32 97	58	159 34	12	32 61	58	157 61
13	36 11	59	163 89	13	35 71	59	162 09	13	35 33	59	160 33
14	38 89	60	166 67	14	38 46	60	164 84	14	38 04	60	163 04
15	41 67	61	169 44	15	41 21	61	167 58	15	40 76	61	165 76
16	44 44	62	172 22	16	43 96	62	170 33	16	43 48	62	168 48
17	47 22	63	175 00	17	46 70	63	173 08	17	46 20	63	171 20
18	50 00	64	177 78	18	49 45	64	175 82	18	48 91	64	173 91
19	52 78	65	180 56	19	52 20	65	178 57	19	51 63	65	176 63
20	55 56	66	183 33	20	54 95	66	181 32	20	54 35	66	179 35
21	58 33	67	186 11	21	57 69	67	184 07	21	57 07	67	182 07
22	61 11	68	188 89	22	60 44	68	186 81	22	59 78	68	184 78
23	63 89	69	191 67	23	63 19	69	189 56	23	62 50	69	187 50
24	66 67	70	194 44	24	65 93	70	192 31	24	65 22	70	190 22
25	69 44	71	197 22	25	68 68	71	195 05	25	67 93	71	192 93
26	72 22	72	200 00	26	71 43	72	197 80	26	70 65	72	195 65
27	75 00	73	202 78	27	74 18	73	200 55	27	73 37	73	198 37
28	77 78	74	205 56	28	76 92	74	203 30	28	76 09	74	201 09
29	80 56	75	208 33	29	79 67	75	206 04	29	78 80	75	203 80
30	83 33	76	211 11	30	82 42	76	208 79	30	81 52	76	206 52
31	86 11	77	213 89	31	85 16	77	211 54	31	84 24	77	209 24
32	88 89	78	216 67	32	87 91	78	214 29	32	86 96	78	211 96
33	91 67	79	219 44	33	90 66	79	217 03	33	89 67	79	214 67
34	94 44	80	222 22	34	93 41	80	219 78	34	92 39	80	217 39
35	97 22	81	225 00	35	96 15	81	222 53	35	95 11	81	220 11
36	100 00	82	227 78	36	98 90	82	225 27	36	97 83	82	222 83
37	102 78	83	230 56	37	101 65	83	228 02	37	100 54	83	225 54
38	105 56	84	233 33	38	104 40	84	230 77	38	103 26	84	228 26
39	108 33	85	236 11	39	107 14	85	233 52	39	105 98	85	230 98
40	111 11	86	238 89	40	109 89	86	236 26	40	108 70	86	233 70
41	113 89	87	241 67	41	112 64	87	239 01	41	111 41	87	236 41
42	116 67	88	244 44	42	115 38	88	241 76	42	114 13	88	239 13
43	119 44	89	247 22	43	118 13	89	244 51	43	116 85	89	241 85
44	122 22	90	250 00	44	120 88	90	247 25	44	119 57	90	244 57
45	125 00			45	123 63	91	250 00	45	122 28	91	247 28
46	127 78			46	126 37			46	125 00	92	250 00

Note: This is included as a sample;

INDEX.

Subject.	Section.	Page.
A.		
Absences from light-stations of keepers and assistants	2	5
monthly report of	3, 50	5, 9
on what occasions authorized	6	5
Absences from light-ships of crews, &c., monthly report of	118, 134	15, 16
keeper and mate at same time prohibited	129	15
crews, regulations regarding	130	15
Abstract of vessels passing light-house stations	50	9
light-ships	104, 134	14, 16
weather	99	14
Abuse of privileges by keepers of light-house stations	6	5
crews of light-ships	130	15
Allowances of provisions, table of	211	30
Anderson hand fog-signal, directions for management of	196, 198	26
Annual returns to be made by light-house keepers	50	9
light-ship keepers	134	16
Apparatus, keepers must acquaint themselves with workings of	8	5
illuminating, to be carefully covered before cleaning is begun	36	7
specific directions as to daily cleaning, &c	37	7
preparation and use of rouge and whiting for polishing lens	38, 39	8
machinery out of order, inspector and engineer to be informed	47	8
Appurtenances of lights, care of	.....	7
Aprons, linen, when to be used	36	7
Assistant keeper, subordination of, to keeper	1	5
when duties of keeper to devolve on	2	5
not to be absent without consent of keeper	2	5
proper leave of absence to be granted to	2	5
cannot be excused by keeper from regular share of duty	5	5
disability of, to be reported to inspector	5	5
duties of, to be equally shared by keeper	13	6
to report keeper for neglect of duty	14	6
Attendance, constant, of light	11	6
Awnings of light-ships to be spread in hot weather	120	15
B.		
Bad weather, special duties of light-ship keeper in	112	14
Balance of salary not to be paid till public property is accounted for	28	7
Ballast of light-ships to be moved and cleaned out semi-annually	119	15
Bedding, wet, of light-ships must not be kept below	121	15
of light-ships must be carefully aired	121	15
Bed-rooms must be neatly kept	21	6
Boats, light-house, purposes for which they may be used	26	7
liability of keepers for damage to	26	7
light-ship, &c., great care to be taken of	123	15
undue use of, by pilots prohibited	128	15
Books of record to be kept at all stations, list of	51	9
Brass, use of rotten-stone for polishing	40	8
Buildings, tower, &c., color of, not to be changed without written orders	20	6
utmost neatness demanded	21	6
Business, trade, &c., interfering with keeper's duties not to be engaged in	15	6
C.		
Capillary lamp. (See Hains lamp; Mineral-oil lamps.)		
Care of lights and their appurtenances	.....	7
Cement-wash, recipe for making, &c	209	29
Chain, riding, of light-ships, examination and report as to condition of	115	14
scope of, to be varied	116	15
Chariot of lens, directions as to care of	47	8
Charts, &c., light-ship keepers and mates to be conversant with	102	14
Chimneys, instructions as to cleaning	42	8

12 L K

INDEX—Continued.

Subject.	Section.	Page.
Cleaning apparatus, &c., specific instructions regarding	37	7
reflectors, specific instructions as to	41	8
chimneys, specific instructions as to	42	8
materials for, unauthorized, not to be used	43	8
Clock-work, directions as to care of	46	8
not working properly, inspector and engineer to be notified	47	8
Clothing, wet, on light-ships, not to be kept below	121	15
Color of towers or buildings not to be changed without written orders	20	6
Commutation of light-ship rations, regulations regarding	132	15
Condemned, &c., public property, disposition of	30	7
Condition of station, monthly report of	50	9
Conductors, lightning, of light-ships, directions regarding	111	14
Constant-level lamp. (See Lamp; Mineral-oil lamps.)		
Courtesy, visitors to be treated with, by light-house keepers	16	6
pilots and others to be treated with, by light-ship keepers	128	15
Crews of light-ships, derelictions of, to be reported to inspector	95	13
to be exercised in signals	101	14
regulations regarding absence of	130	15
Curtains of lanterns, when to be hung	36	7
D.		
Daboll fog-trumpet and Ericsson caloric engine, descriptive plates	173	23
directions for operating	174–188	23, 24
Daily-expenditure book to be kept at all stations	51	9
Damage to boats, liability of keepers for	26	7
station or apparatus, report of	50	9
Death, &c., of keeper, inventory of public property to be made	27	7
Deep-sea lead, use of, as to light-ship in heavy weather	113	14
Description and inventory, when to be sent by light-ship keeper to inspector	134	16
Diamond for cutting glass, use of, to be learned	49	9
Disability of assistant keeper to be reported to inspector	5	5
Division of watches	12	6
Dragging light-ship, lights to be extinguished; day-marks to be hid	113	14
Draw-buckets on light-ships, directions as to keeping	109	14
Driers, materials that may be used for	204	28
Dust, precautions to avoid, in sweeping	44	8
Duties of station to be equally shared by keeper and assistant	13	6
neglect of, by keeper to be reported by assistant	14	6
E.		
Economy as to expenditure of stores and supplies	9	5
Ericsson caloric engine and Daboll trumpet, descriptive plates	173	23
directions for operating	174–188	23, 24
Estimates, &c., must be explicit in statement	31	7
Expenditures of oil, &c., report of, quarterly, to be made by light-house keepers	50	9
light-ship keepers	134	16
Extinguishment of lights, when navigation is suspended on account of ice	32	7
at island stations on northern lakes	33	7
each morning, duties of keeper	36	7
Funck lard-oil float-lamp at sunrise	62	10
mineral-oil float-lamp	74	11
mineral-oil lamps, 4th, 5th, and 6th order	89	13
ignited mineral oil by sand or ashes	24, 92	6, 13
lights on dragging light-ships	113	14
F.		
Families of keepers only permitted to reside at light-stations	22	6
Fees or charges for admitting visitors to stations prohibited	18	6
Fire, precautions to be taken to guard against	24, 108	6, 14
extinguishment of, by sand or ashes	24, 92	6, 13
Fires and lights in dwellings must not be left unattended	25	7
Fire-buckets on light-ships, directions as to keeping	107	14
Flame, management of, in Funck lard-oil float-lamp	56	10
height of, in Funck lard-oil float-lamp	56	10
management of, in 1st, 2d, and 3d order Funck mineral-oil float-lamps	72, 73	11
4th, 5th, and 6th order mineral-oil lamps	85, 87	12
Fog-signal management: Condition of signal to be specified in watch book	12	6
Accountability of keepers	135	16
Duty of keeper before starting signal	136	16
Care of boiler and machinery	136	16
Report, in case of accident	137	16
Hand force-pumps to be provided	137	16

INDEX—Continued.

Subject.	Section.	Page.
Fog-signal management: Engine-room, care of	137	16
Machinery, care of, when in operation	138	16
Spontaneous combustion, precautions against	137	16
Oil-rags, &c., to be burned	137	16
Heater, commencement of firing under	139	16
Furnace, commencement of firing in	139	16
and ash pit, cleaning out	140	17
Lighting fire, preparations for	140	17
"Getting up steam," directions as to starting	140	17
Cold weather, temperature of water in boiler	141	17
Heater, precautions not to burn	142	17
examination of connection pipes	142	17
Obstruction of circulation between heater and boiler	143	17
Banking fires when heaters are not provided	143	17
Getting up steam, oiling machinery, &c	144	17
Oiling and cleaning wearing parts	144	17
Boilers, directions as to quantity of water when engine is in operation	145	17
foaming, &c., treatment of	146, 147	17
Gauge-cocks, management of	148	18
Glass gauge to be frequently blown out	149	18
Safety-valve, frequent examination of	150	18
to be taken apart once a month	150	18
Pumping, regular and continuous, essential	151	18
special directions as to	151	18
Furnace door to be kept closed	152	18
Draft, regulation of	152	18
Ash-pit door, when to be open, when closed	152	18
Furnace doors of tubular boilers, management of	153	18
Grate bars, space below, in ash pit, to be kept free	154	18
Boiler and flues to be brushed clean daily	154	18
cleaned when engine stops	154	18
Steam-pressure gauge and safety-valve, difference in indications	155	18
Water, different in quality, management of boilers	156	18
Water-blow should be opened once in twelve hours	157	18
Blow-cock not to be left while open	157	18
Sea water, blowing off, &c., in case of continuous use of	158	19
Fresh-water tanks, filling, blowing out of boiler, &c	159	19
Pressure of steam, instructions as to, by whom to be given	160	19
Freezing weather, precautions to be taken	161	19
Winter precautions	162	19
Coal, anthracite, firing with	163	19
bituminous, firing with	163	19
Hauling fires, directions as to	164	19
Starting engine, directions as to	165	19
Stopping engine, directions as to	166	19
The siren: Description of boiler	167	19, 21
engine	168	21
Starting engine	169	21
Steam-pressure	170	21
Valve-gear, disarrangement of	171	21
Steam-whistle, descriptive plates of	172	22
Ericsson caloric engine and Daboll trumpet, parts shown in plates	173	23
directions for operating	174–188	23, 24
Stevens fog-bell striking apparatus, parts shown in plates	189	24, 25
directions for operating	190–195	25, 26
Anderson hand fog-signal, directions for management of	196–198	26
Fog-signal record to be kept	51	9
report, monthly, to be made by light-house keepers	50	9
light-ship keepers	134	16
Funck lard-oil float-lamp, regulations as to use of		9
reservoir, filling the	52	9
burner, leveling the	53	10
matches or paper not to be used for lighting	54	10
lighting, details to be observed in	55	10
flame, management and height of	56	10
chimney, position of, with reference to color of flame	57	10
ventilators, regulation of	57	10
chimney breaking, action in case of	58	10
wicks, directions as to trimming	59	10
burners, spare, to be always on hand	60	10
burners, spare, directions as to placing	60	10
stoppage of oil, action in case of	61	10
extinguishing light at sunrise	62	10
dismounting and cleaning	63	10
float and float-chamber, weekly examination of	64	10

INDEX—Continued.

Subject.	Section.	Page.
Funck lard-oil float-lamp, directions as to placing	65	11
butts, lard-oil, management of	66	11
lamp, directions as to refilling	67	11
oil in lower reservoir to be drawn off each morning	67	11
daily expenditure of, not to be guessed at, &c	67	11
heating of, in cold weather	68	11
having sediment, treatment of	69	11
for house lamps	69	11
mineral-oil float-lamp for 1st, 2d, and 3d order lights, regulations as to use of	.....	11
reservoir, filling	70	11
faucet, opening	71	11
lighting, directions as to	72	11
flame, management of	72, 73	11
damper, management of	73	11
light, extinguishing	74	11
burner, changing	75	12
float, removing and replacing	76	12
wicks, fitting	77	12
plunger, removing	78	12
packing, fitting	79	12
valve leather, new, putting in	80	12
plunger, replacing	81	12
strainers to be kept in good order	82	12
lint, &c., precautions regarding	82	12
oil, mineral, care of	83	12
G.		
Gas, leakage of, from pipe of stove	41	8
General account book to be kept at all stations	51	9
Glass of lantern, broken, directions as to replacing	49	9
Grease, salted, use of, prohibited	46	8
H.		
Hains or low-reservoir and constant-level mineral-oil lamps, 4th, 5th, and 6th order:		12
description of	84	12
filling, directions as to	84, 91	12, 13
lighting, instructions as to	85	12
flame, management of	85, 87	12
chilling, precautions to prevent	86	12
changing lamps	88	13
extinguishing lights	89	13
trimming, directions as to	90	13
oil must not be poured into lamp when lighted, &c	91	13
precautions against ignition of	92	13
ignited, use of sand or ashes to extinguish	92	13
must be drawn only by daylight	93	13
cans, pargetized, use of	93	13
transporting, care of	94	13
empty, disposition of	94	13
Height of flame in Funck lard-oil float-lamp	56	10
House lamps, oil to be used in	69	11
I.		
Ice, suspension of navigation and extinguishment of light because of	32	7
drift, management of light-ship riding-chain in	117	15
Ignorance of workings of apparatus not excusable	8	5
Illuminating apparatus to be carefully covered before cleaning is begun	36	7
daily cleaning, &c., of, specific instructions as to	37	7
rouge and whiting, preparation and use of, for polishing lens	38, 39	8
machinery out of order, inspector and engineer to be informed	47	8
Instructions, general, to all light-keepers	.....	5
for painting	199	26
Intoxicated persons, prohibition relating to	17	6
Intoxicating liquors on board of light-ships prohibited	126	15
Inventory of public property to be made on resignation, &c., of keeper	27	7
property of all kinds to be taken by new keeper of light-ship	98	13
Island stations on northern lakes, lights to be continued in fall as long as possible	33	7
J.		
Journal to be kept at all stations	51	9
directions for keeping	51	9

INDEX—Continued.

Subject.	Section.	Page.
K.		
Keepers' dwellings, fires and lights in, must not be left unattended	25	7
Keeper and mate of light-ship not to be absent at same time	129	15
L.		
Laborers making repairs to be assisted by keepers	19	6
Lamps, Funck lard-oil float, regulations relating to		9
reservoir, filling	52	9
burner, leveling	53	10
matches or paper, use of, for lighting, prohibited	54	10
lighting, details to be observed	55	10
flame, management and height of	56	10
chimneys, position of, with reference to color of flame	57	10
ventilators, regulation of	57	10
chimney, breaking, action in case of	58	10
wicks, directions as to trimming	59	10
burners, spare, to be always on hand	60	10
directions as to placing	60	10
stoppage of oil, action in case of	61	10
extinguishing light at sunrise	62	10
dismounting and cleaning	63	10
float and float-chamber, weekly examination of	64	10
directions as to placing	65	11
butts, lard-oil, management of	66	11
oil in lower reservoir to be drawn off each morning	67	11
directions as to refilling	67	11
oil, daily expenditure of, not to be guessed at, &c	67	11
heating, in cold weather	68	11
having sediment, treatment of	69	11
for house lamps	69	11
Funck mineral-oil float, 1st, 2d, and 3d order, reservoir, filling the	70	11
faucet, opening the	71	11
lighting, directions as to	72	11
flame, management of	72	11
damper, management of	73	11
extinguishment of light	74	11
burner, changing	75	12
float, removing and replacing	76	12
wicks, fitting	77	12
plunger, removing	78	12
packing, directions as to fitting	79	12
valve leather, putting in new	80	12
plunger, replacing	81	12
strainers to be kept in good order	82	12
lint, precautions in regard to	82	12
oil, mineral, care of	83	12
Hains or low-reservoir and constant-level mineral-oil, for 4th, 5th, and 6th order		12
description of	84	12
filling, directions as to	84, 91	12, 13
lighting, instructions as to	85	12
flame, management of	85, 87	12
chilling, precautions to prevent	86	12
changing lamps	88	13
extinguishing lights	89	13
trimming, directions as to	90	13
oil must not be poured into lamp when lighted, &c	91	13
precautions against ignition of	92	13
ignited, use of sand or ashes to extinguish	92	13
must be drawn only by daylight	93	13
cans, pargetized, use of	93	13
transporting, care of	94	13
empty, disposition of	94	13
Lantern curtains, when to be hung	36	7
glass, broken, directions as to replacing	49	9
Lard-oil butts, management of	66	11
daily expenditure of, not to be guessed at, &c	67	11
heating, in cold weather	68	11
having sediment, disposition of	69	11
for use in house lamps	69	11
Lard-oil lamps. (See Funck lamps.)		
Latitude, light-ship keepers and mates, to be able to find	102	14
Leakage of gas from pipe of stove	41	8
Leaves of absence, proper, to be granted assistant keepers	2	5

INDEX—Continued.

Subject.	Section.	Page.
Leaves of absence, monthly report of	3	5
Lens. (See Illuminating apparatus.)		
Liability of keepers for damage to boats	26	7
quantities, &c., of public property receipted for	29	7
Lights, responsibility of keeper as to care, &c., of	1	5
visitation of, by keeper, when there is no assistant	4	5
care of, in stormy nights	4	5
and fires in dwellings, care of	25	7
must not be extinguished till final close of navigation	32	7
at island stations on northern lakes, when to be extinguished	33	7
care of, and of their appurtenances		7
to be exhibited from sunset to sunrise	34	7
early preparation for lighting, to be made	35	7
extinguishment of, each morning, duties of keeper	36	7
relighting, preliminary preparations for	36	7
Light-house never to be left unattended	11	6
premises, traffic, trade, &c., on, prohibited	15	6
utmost neatness demanded	21	6
stations, families of keepers only permitted to reside at	22	6
Lightning-conductors of light-ships, directions regarding	111	14
Light-ships, special regulations regarding	.....	13
efficiency, &c., keepers' responsibility for	95	13
crew, derelictions of, to be reported to inspector	95	13
log-book, directions as to keeping	96	13
stores, &c., care and economical use of	97	13
inventory of property to be taken by new keeper	98	13
stores expended, daily account of	99	14
weather, &c., abstract of	99	14
stores, verification of receipt and report of	100	14
signals, exercise of crews in	101	14
nautical instruments and charts, keepers and mates to be thoroughly conversant with	102	14
latitude, finding, by meridian observation of sun	102	14
wrecks, duties of keepers with reference to	103	14
wreck report, matters to be embraced in	103	14
passing vessels, account of, to be kept; abstract of account	104	14
watch, duty of keeper with reference to	105	14
regular, must be kept at all times	106	14
special duties of	106	14
pump-well, when to be sounded	106	14
fire-buckets, where to be kept	107	14
fire, precautions against	108	14
draw-buckets, when and where to be kept	109	14
wash-deck pump, examination of, &c	110	14
lightning-conductors, rigging out, &c	111	14
bad weather, personal attention of keeper	112	14
deep-sea lead, use of, in heavy weather	113	14
dragging, lights to be extinguished in case of	113	14
moving from station, except in cases of extreme danger, prohibited	114	14
riding-chain, monthly examination of	115	14
report of injury, &c., to	115	14
variation of scope of	116	15
precautions in case of drift ice	117	15
moorings, monthly report of, to be sent inspector	118	15
absences, monthly report of, to be sent inspector	118	15
ballast, when to be moved and cleaned out	119	15
pumping ship and bailing water	120	15
ventilation, precautions to secure	120	15
wind-sails and awnings, directions regarding	120	15
bedding, airing of, &c	121	15
sails, care of	122	15
boats and their equipments, care of	123	15
stores or supplies, timely notice to inspector, so that they may not run short	124	15
trade, &c., interfering with keepers' duties prohibited	125	15
traffic on board of ship prohibited	125	15
intoxicating liquors of all kinds prohibited	126	15
vessels obscuring light to be kept off	127	15
vessels prohibited from making fast to	127	15
pilots not to be permitted to make ship a rendezvous	128	15
and others to be treated with courtesy	128	15
boats, undue use of, by pilots, &c., prohibited	128	15
absence of keeper and mate at same time prohibited	129	15
crew, regulations regarding	130	15
abuse of privileges by crew to be reported to inspector	130	15
mess of keepers, mates, and crews	131	15
rations, &c., purchased with commutation money	131	15

INDEX—Continued.

Subject.	Section.	Page.
Light-ships, commutation of rations, regulations regarding	132	15
oil, mineral, care of	133	16
returns, list of, to be made by keeper to inspector	134	16
reports, monthly, quarterly, and annually, to be made	134	16
special, to be made	134	16
Log-book to be kept on light-ships	96	13
Low-reservoir or Hains lamp. (See Hains; Lamps; Mineral-oil lamps.)		
M.		
Machinery of illuminating apparatus out of order, inspector and engineer to be informed	47	8
Malt liquor on board of light-ship prohibited	126	15
Mate and keeper of light-ship not to be absent at same time	129	15
Materials for cleaning, unauthorized, not to be used	43	8
Mechanical skill of keeper to be exercised in keeping station in good order	19	6
Medicine chest, spirituous liquors, &c., may be kept in, for illness	126	15
Meridian observation of sun, finding latitude by	102	14
Mess of keepers, mates, and crews of light-ships	131	15
Mineral oil on fire, extinguishment of, by sand or ashes	24	6
care of	83, 91, 92, 133	12, 13, 16
Mineral-oil lamps, for 1st, 2d, and 3d order lights, Funck's float, reservoir, filling the	70	11
faucet, opening the	71	11
lighting, directions as to	72	11
flame, management of	72	11
damper, management of	73	11
light, extinguishment of	74	11
burner, changing	75	12
float, removing and replacing	76	12
wicks, fitting	77	12
plunger, removing	78	12
packing, directions as to fitting	79	12
valve leather, putting in new	80	12
plunger, replacing	81	12
strainers to be kept in good order	82	12
lint, precautions in regard to	82	12
oil, mineral, care of	83	12
for 4th, 5th, and 6th order lights, Hains or low-reservoir and constant-level:		
are of two kinds	84	12
description of	84	12
filling, directions as to	84, 91	12, 13
lighting, instructions as to	85	12
flame, management of	85, 87	12
chilling, precautions to prevent	86	12
changing lamps	88	13
extinguishing lights	89	13
trimming, directions as to	90	13
oil must not be poured into lamp when lighted, &c	91	13
precautions against ignition of	92	13
ignited, use of sand or ashes to extinguish	92	13
must be drawn only by daylight	93	13
cans, pargetized, use of	93	13
transporting, care of	94	13
empty, disposition of	94	13
Monthly reports to be made	50, 134	9, 16
returns to be made by keepers of light-ships	134	16
Mooring reports of light-ships, monthly, to be made	118, 134	15, 16
Muster-roll of light-ships to be made quarterly to inspector	134	16
N.		
Nautical instruments, light-ship keepers and mates to make themselves conversant with	102	14
Navigation, suspension of, on account of ice, extinguishment of lights	32, 33	7
Neatness, utmost, of buildings and premises demanded	21	6
Neglect of duty by keeper to be reported by assistant	14	6
Northern lakes, island stations, lights at, to be continued as long as possible	33	7
O.		
Oil, lard, in lower reservoir to be drawn off each morning	67	11
daily expenditure of, not to be guessed at, &c	67	11
heating, in cold weather	68	11
having sediment, treatment of	69	11
for house lamps	69	11
mineral, care of	83, 91, 92, 133	12, 13, 16

INDEX—Continued.

Subject.	Section.	Page.
Oil, mineral, precautions to prevent chilling of	66	12
must not be poured into lamp when lighted, &c	91	13
precautions against ignition of	92	13
ignited, use of sand or ashes to extinguish	24, 92	6, 13
must be drawn only by daylight	93	13
Oil butts, management of	66	11
Oil cans, pargetized, use of	93	13
transporting, care of	94	13
empty, disposition of	94	13
&c, expenditures, quarterly report of	50, 134	9, 16
P.		
Paint, mixture for removing, from old iron	201	27
preparation of, for inside and outside work	202, 203	27
hints for mixing paints	204	27
materials for driers	204	28
care of paints	206	28
hints as to putting on	207	28
Paint-brushes, description and use of	205	28
Painting, instructions for	199, 200	26, 27
Passing vessels, abstract of	50, 104, 134	9, 14, 16
record of, to be kept by light-ship keeper	104	14
Pay-roll of light-ship, when to be sent inspector	134	16
Pilots not to be permitted to make light-ship a rendezvous	128	15
unduly use boats	128	15
Polishing lens, preparation and use of rouge and whiting for	38, 39	8
brass, use of rotten-stone for	40	8
Premises, buildings, &c., utmost neatness demanded	21	6
Preparations, early, for lighting, to be made	35	7
for painting, instructions as to	.....	26
Property returns, annual, to be made	50	9
Provisions and rations of light-ships purchased with commutation money	131	15
table of allowances of	211	30
Public property, inventory of, to be made on resignation of keeper	27	7
must be satisfactorily accounted for, before payment of balance of salary	28	7
quantities, &c., of, should be verified before receipts are signed	29	7
condemned, &c., disposition to be made of	30	7
Pump, wash-deck, examination of	110	14
Pumping out of light-ship daily	120	15
Pump-well of light-ship, duties of watch as to	106	14
Punctuality in lighting at sunset	35	7
Q.		
Quarterly returns to be made by light-house keepers	50	9
light-ship keepers	134	16
R.		
Rain-water, purification of	210	29
Rations and provisions of light-ships purchased with commutation money	131	15
of light-ships, commutation of	132	15
Receipts for property, verification of quantities, &c	29	7
duplicate, to be taken for condemned property, &c	30	7
for supplies, &c., to be forwarded	50	9
Recipes for removal of paint from old iron	201	27
whitewash	208	29
cement-wash	209	29
for purification of rain-water	210	29
Record of daily issues of supplies, &c	10	5
books to be kept, list of	51	9
Reflectors, directions as to cleaning	41	8
liable to be injured by gas leaking from stove pipe	41	8
Regulations relating to Funck's lard-oil float-lamp	.....	9
mineral-oil float-lamp	.....	11
low-reservoir and constant-level lamps	.....	12
light-ships	.....	13
for the use and management of fog-signals	.....	16
Repairs, laborers making, to be assisted by keepers	19	6
to be made by keepers, when practicable	19	6
&c., needed, explicit statement as to, must be made	31	7
Report, monthly, of absences	3, 50, 118, 134	5, 9, 15, 16
of disability of assistant keeper	5	5

INDEX—Continued.

Subject.	Section.	Page.
Report, of wrecks, to be promptly made, contents of	23, 103	6, 14
monthly, &c., to state explicitly what is needed, &c	31	7
of time of discontinuance of light and of relighting station	32	7
monthly, quarterly, and annual, &c	50, 134	9, 16
shipwreck	50, 103, 134	9, 14, 16
special, of damage to station or apparatus, &c	50	9
light-ship keepers	134	16
Resignation, &c., of keeper, inventory of public property to be made	27	7
Responsibility of keeper for care, &c., of light	1	5
as to stores and supplies	9	5
of light-ship	95	13
fog-signals	135	16
Returns to be made by keepers of light-stations	50	9
light-ships	134	16
Revolving clock-work, directions as to care of	46	8
out of order, inspector and engineer to be informed	47	8
weight of, when to be kept on its rest	48	9
Riding-chain of light-ships, examination and report as to condition of	115	14
scope of, to be varied	116	15
Rotten-stone, directions as to use of	40	8
Rouge, instructions as to use of, for polishing lens	38	8
S.		
Sails of light-ships to be kept bent in stormy weather	122	15
must be loosed to dry	122	15
Salary, balance of, not to be paid until public property is accounted for	28	7
voucher for, when to be forwarded to inspector	50	9
Salary tables for $1,000		33
900		34
820		35
800		36
760		37
750		38
740		39
720		40
700		41
680		42
675		43
660		44
650		45
640		46
630		47
625		48
620		49
600		50
580		51
575		52
560		53
550		54
540		55
530		56
520		57
510		58
500		59
490		60
480		61
475		62
470		63
465		64
460		65
455		66
450		67
445		68
440		69
435		70
425		71
420		72
410		73
400		74
390		75
375		76
350		77
320		78

INDEX—Continued.

Subject.	Section.	Page.
Salary tables for $300		79
260		80
250		81
240		82
200		83
160		84
150		85
100		86
80		87
Salted grease, use of, prohibited	46	8
Shipping articles, when to be sent to inspector by light-ship keeper	134	16
Shipwrecks, reports of	23, 50, 103, 134	6,9,14,16
directions as to	103	14
wrecked persons to be aided by keepers	23	6
Sickness, duty of keeper in case of	7	5
Signals. (See Fog-signals.)		
crews of light-ships to be exercised in	101	14
Siren, steam, description and management of	167–171	19–21
Spirituous liquors on board of light-ships prohibited	126	15
may be kept in medicine chest for use in case of illness	126	15
Stations, families of keepers only permitted to reside at	22	6
relighting, at opening of navigation	32	7
light-ships not to be moved from, except in case of extreme danger	114	14
Steam-whistle, descriptive plates of	172	22
Stevens fog-bell striking apparatus, descriptive plates	189	24
directions for operating and keeping in order	190–195	25, 26
Stores and supplies, responsibility of keeper as to	9	5
daily issues of, record to be kept	10	5
utensils, &c., light-ship keeper's responsibility for	97	13
inventory of, to be taken by new keeper of light-ship	98	13
expended, daily account of, to be kept by light-ship keeper	99	14
quarterly report of, to be made by light-ship keeper	99	14
received by light-ship keeper, quantity, &c., to be verified, and report made	100	14
or supplies must not be permitted to run short; inspector to be notified	124	15
Stormy nights, care of light in	4	5
Sunset to sunrise, light to be exhibited from	34	7
Supplies, quantities, &c., should be verified before receipts are signed	29	7
keepers responsible for quantities, &c., receipted for	29	7
or stores, inspector to be informed, so that they may not run short	124	15
Suspension of navigation and extinguishment of light on account of ice	32, 33	7
Sweeping, precautions to be taken to avoid dust	44	8
T.		
Tables of salaries. (See Salary tables.)		
Towers, buildings, &c., color not to be changed without written orders	20	6
utmost neatness demanded	21	6
Trade, business, &c., when light-house keeper not to engage in	15	6
light-ship keeper prohibited from carrying on	125	15
Traffic on light-house premises prohibited	15	6
light-ships prohibited	125	15
Trumpet, Daboll steam, description and management of	173–188	23, 24
U.		
Utensils to be kept in proper place	45	8
V.		
Ventilation of light-ship	120	15
Vessels obscuring light of light-ship to be hailed	127	15
not to be permitted to make fast to light-ship	127	15
passing, abstract of	50, 104, 134	9, 14, 16
Vinous liquor on light-ship prohibited	126	15
Visitors, general regulations regarding	16	6
fees or charges for admitting, prohibited	18	6
W.		
Wash-deck pump, examination of	110	14
Watch, light-house; when and where; must be kept	4	5
duty of keeper on	4	5
division of	12	6
light-ship, keeper must see it set before leaving deck at night	105	14
regular, must be kept at all times	106	14
duties of, as to pump-well	106	14

INDEX—Continued.

Subject.	Section.	Page.
Watch book, where and how to be kept	12, 51	6, 9
Water, rain, recipe for purifying	210	29
Weather, bad, special duties of light-ship keeper in	112	14
Weight of clock-work, when to be kept on its rest	48	9
Wet clothing or bedding not to be kept below in light-ship	121	15
Whitewash, recipe for making, &c	208	29
Whiting, instructions as to use of, in polishing lens	39	8
Widow, &c., of deceased keeper, to turn over public property to new keeper	27	7
Wind-sails of light-ship to be kept up in summer	120	15
Work of station to be equally shared by keeper and assistant	13	6
Wrecks, reports of, to be made, contents of, &c	23, 103	6, 14
directions as to	103	14
Wrecked persons to be aided by keepers	23	6

O

FUNCK'S HYDRAULIC FLOAT LAMP

FOR LARD OIL

1ST AND 2ND ORDER LENSES.

Plate 1.

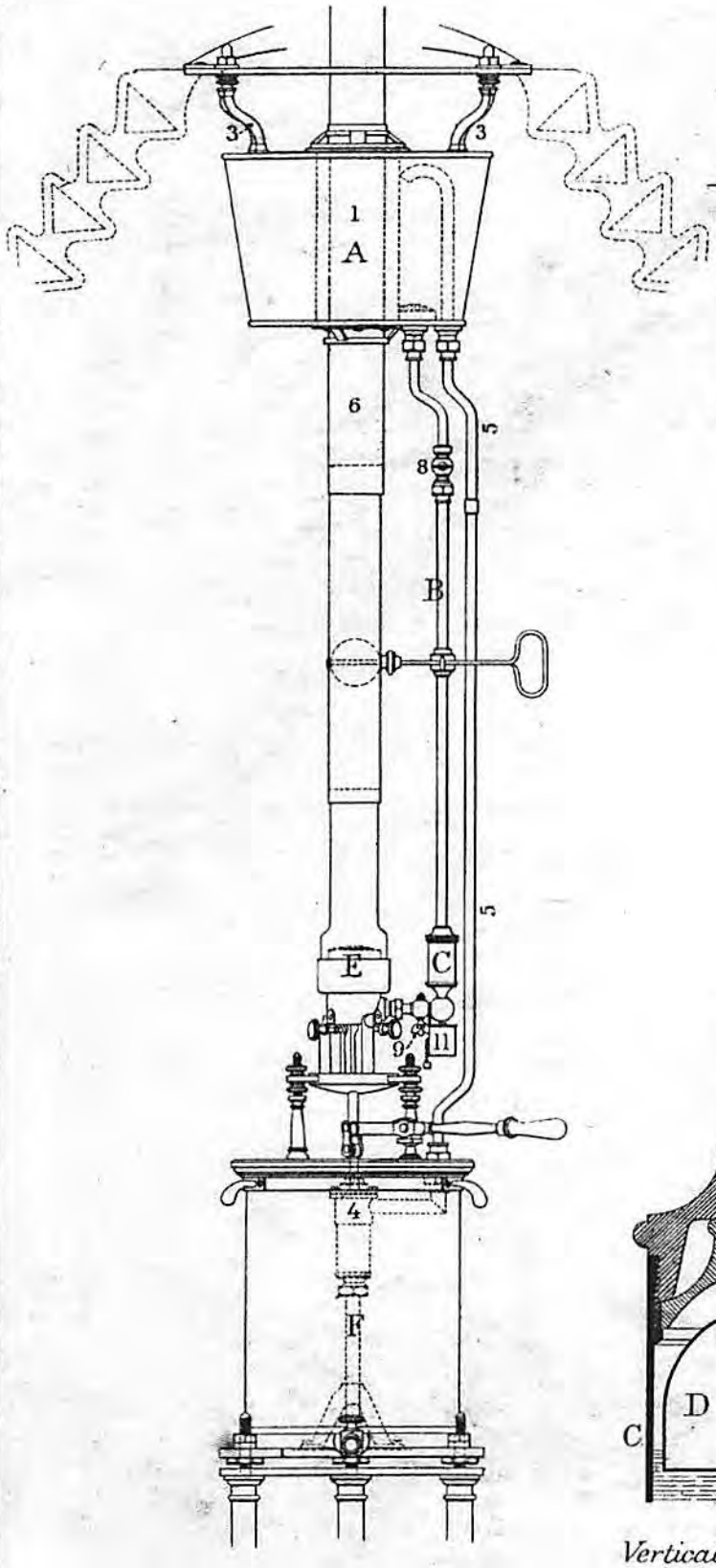

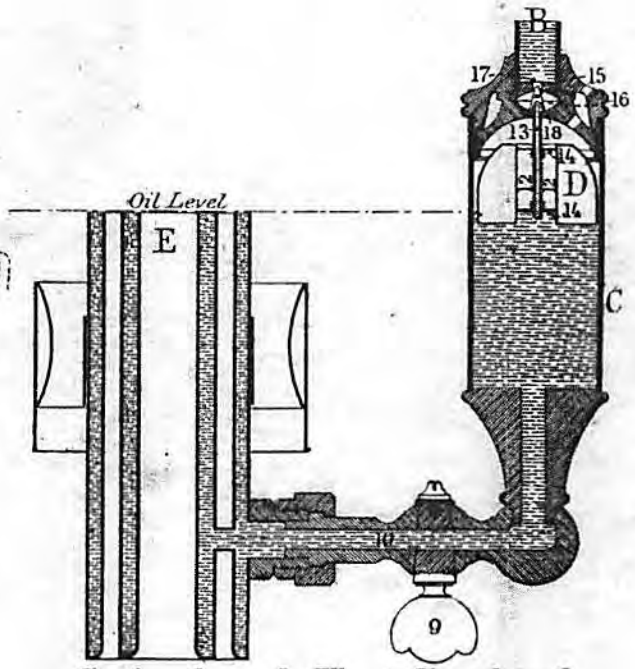

Section through Float Chamber C.

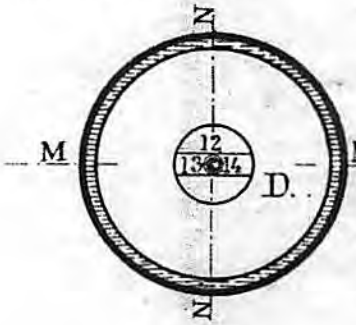

Horizontal Section.

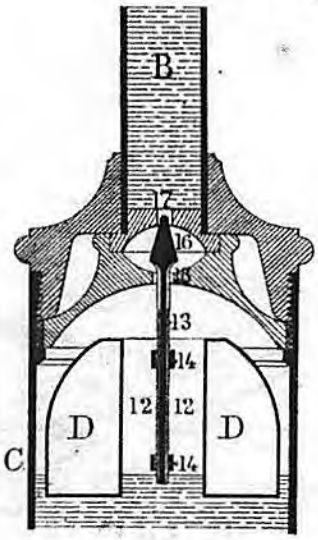

Vertical Section N. N.

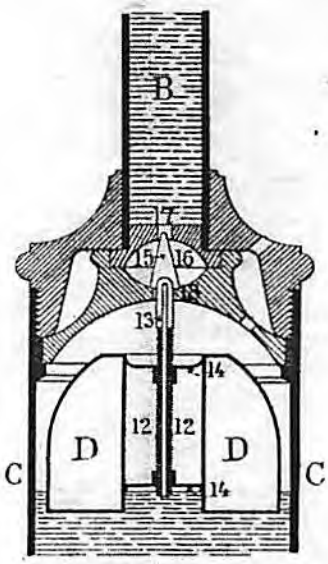

Vertical Section M. M

U.S. THREE WICK MINERAL OIL LAMP
1880.

Plate 2.

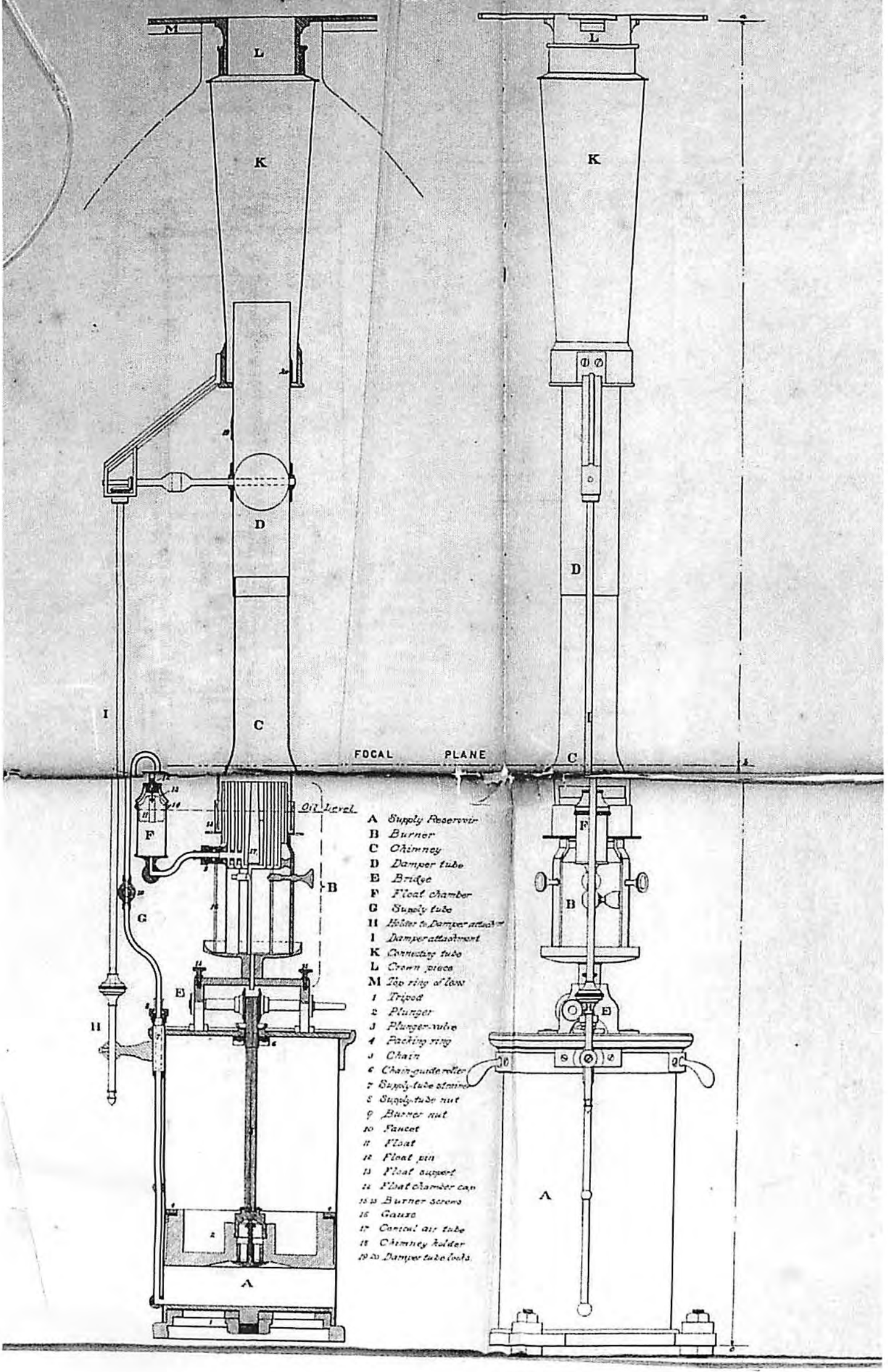

HAINS MINERAL OIL LAMP
FOR 4TH, 5TH AND 6TH ORDER LENSES.

Plate 3.

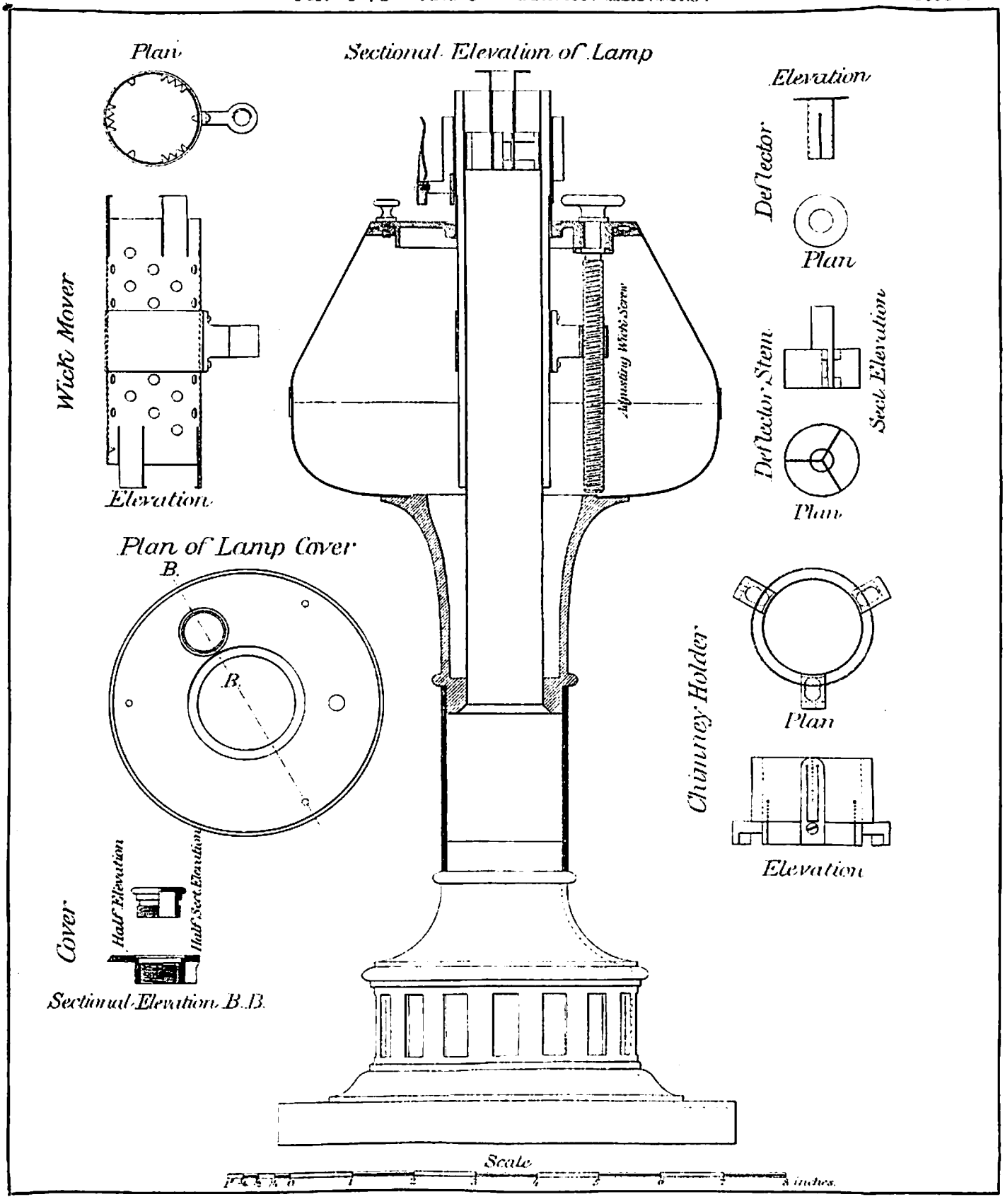

Plate 4.

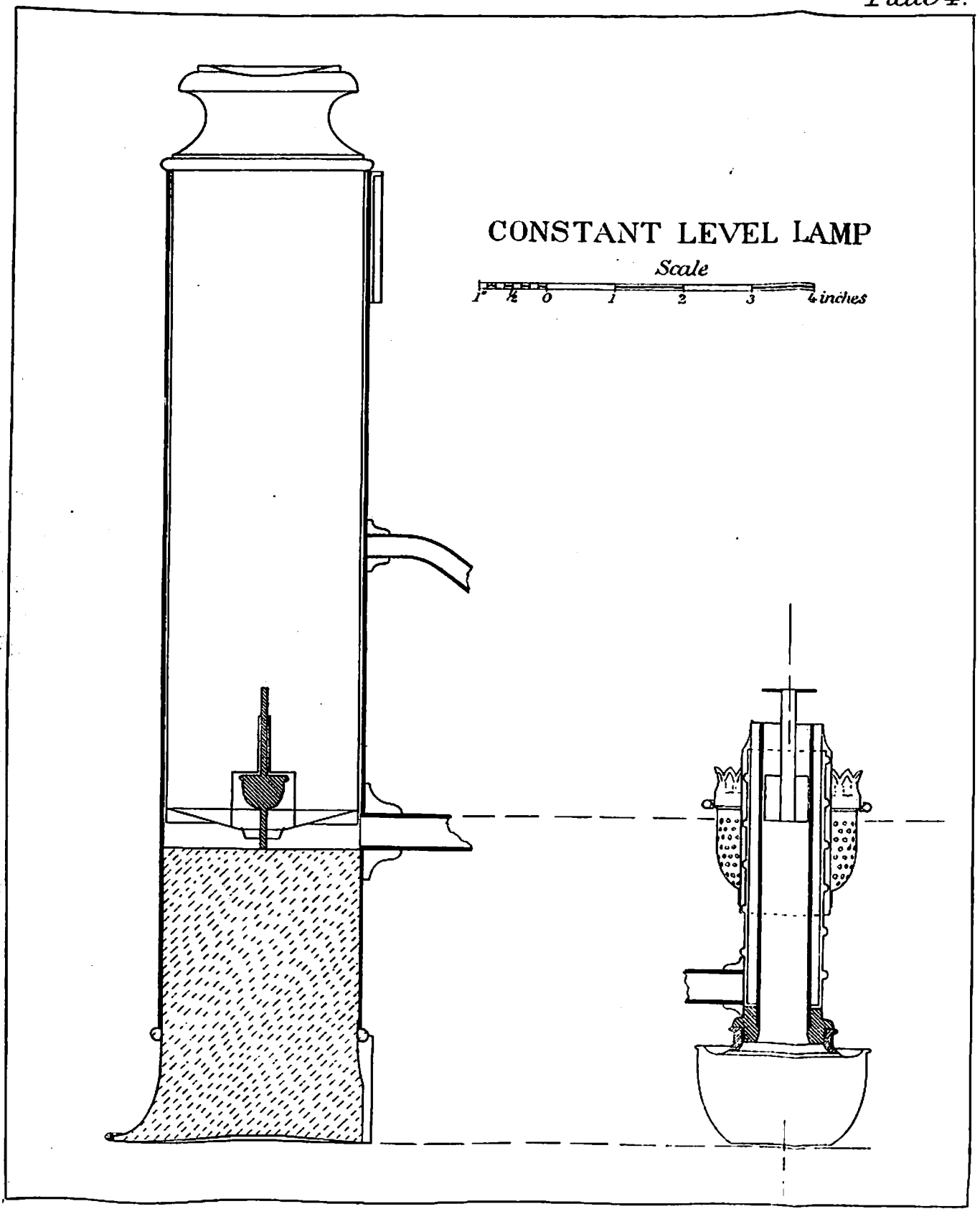

LIGHT SHIP LAMP

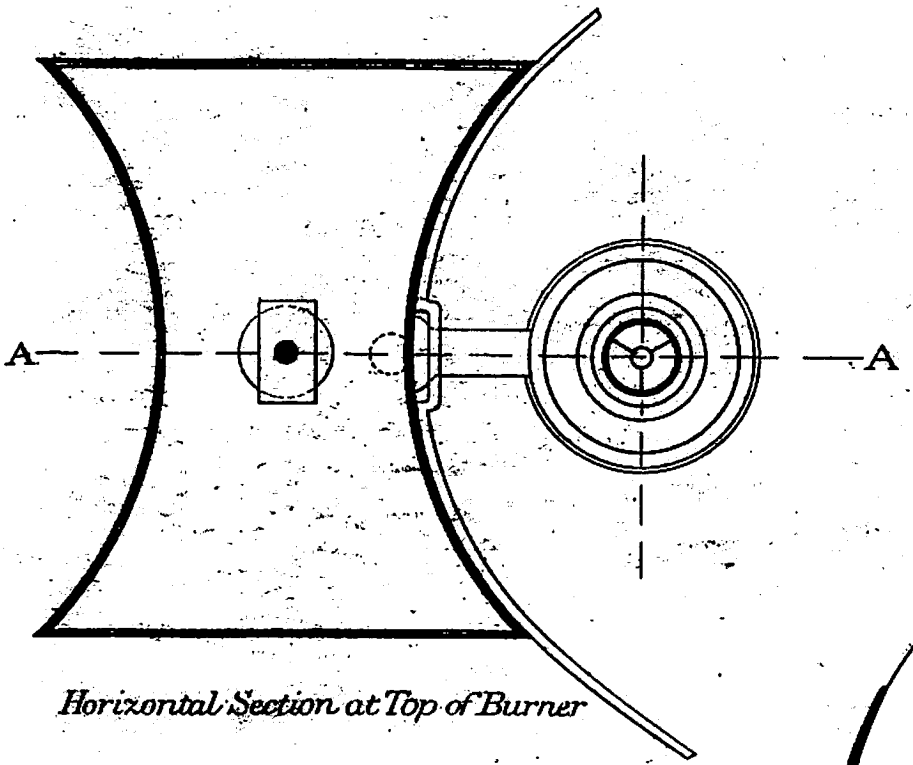

Horizontal Section at Top of Burner

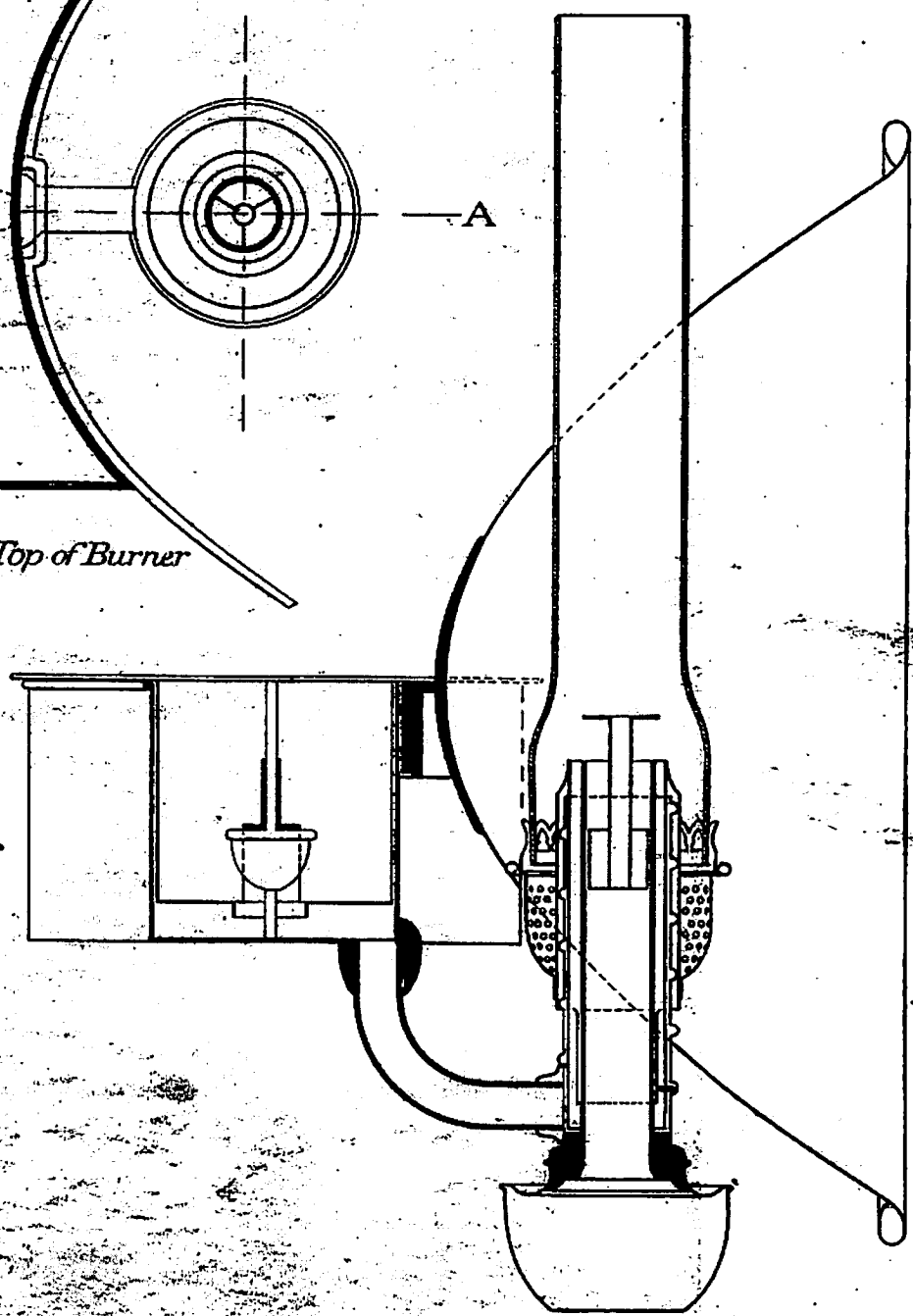

Section A. A.

RAMS OF FLAMES.—NATURAL SIZE.

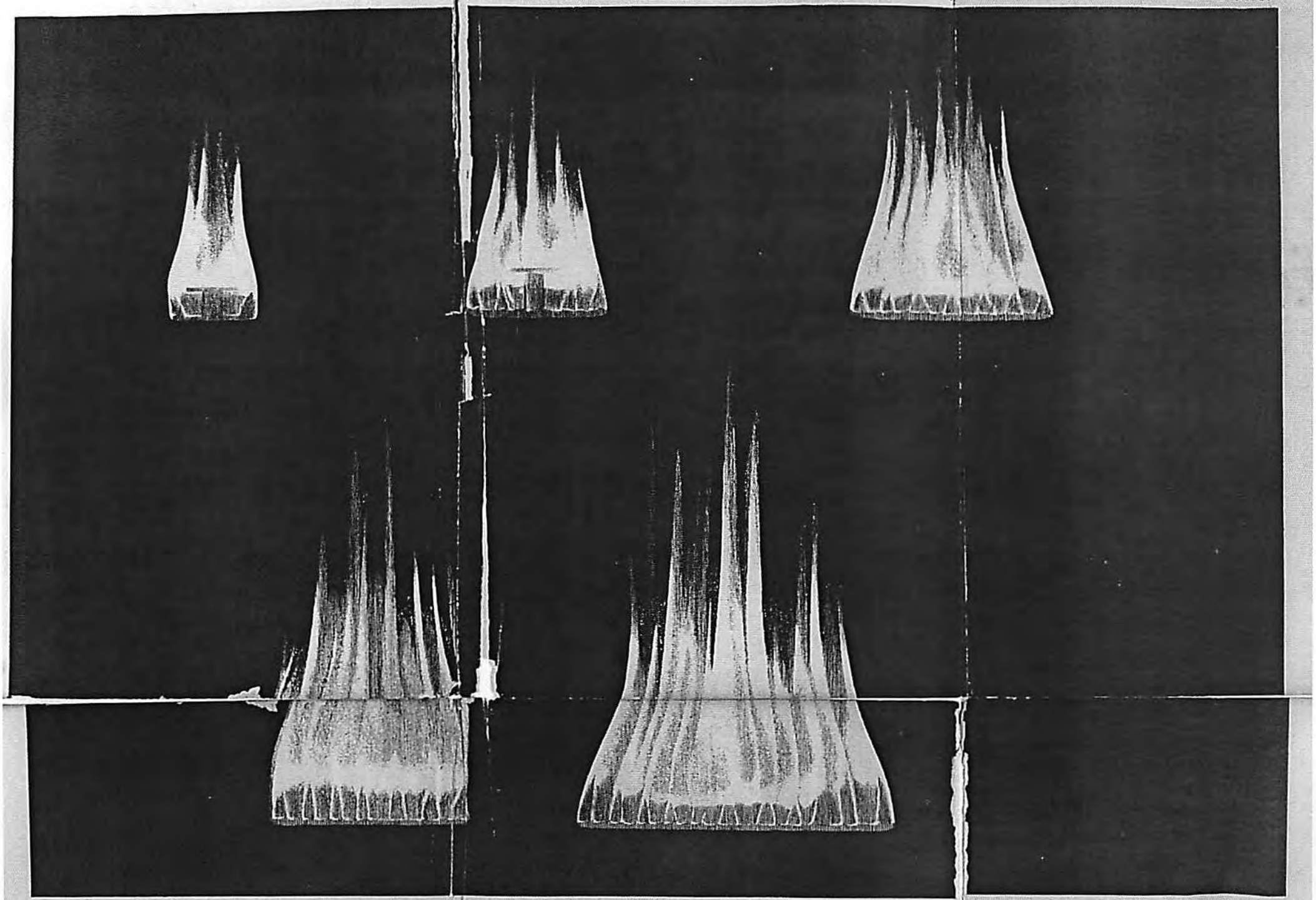

ONE WICK. FOUR WICKS. TWO WICKS. FIVE WICKS. THREE WICKS.

BROWN'S STEAM FOG SIREN

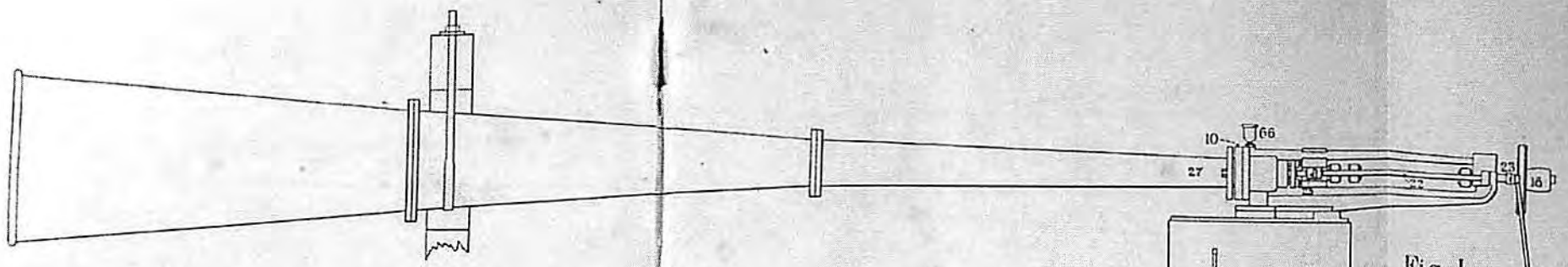

Fig. I.

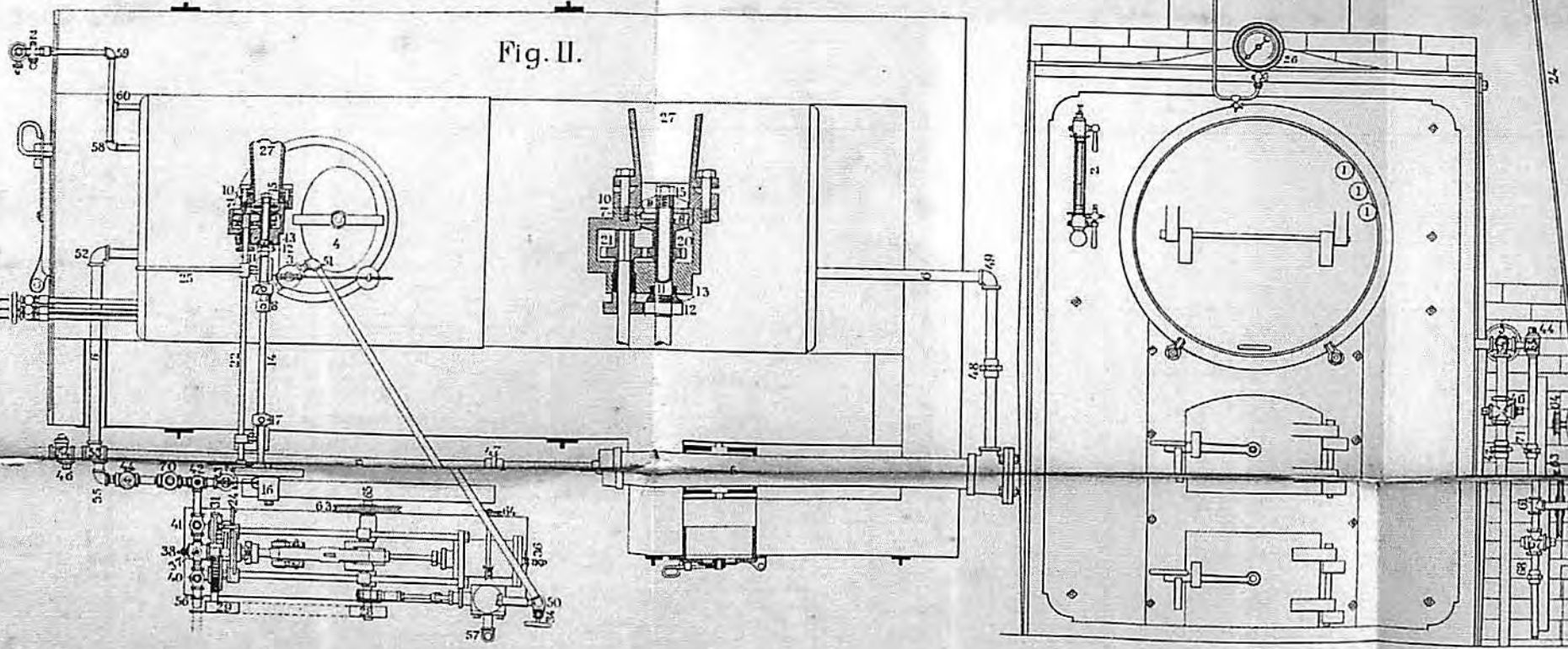

Fig. II.

STEAM FOG WHISTLE.

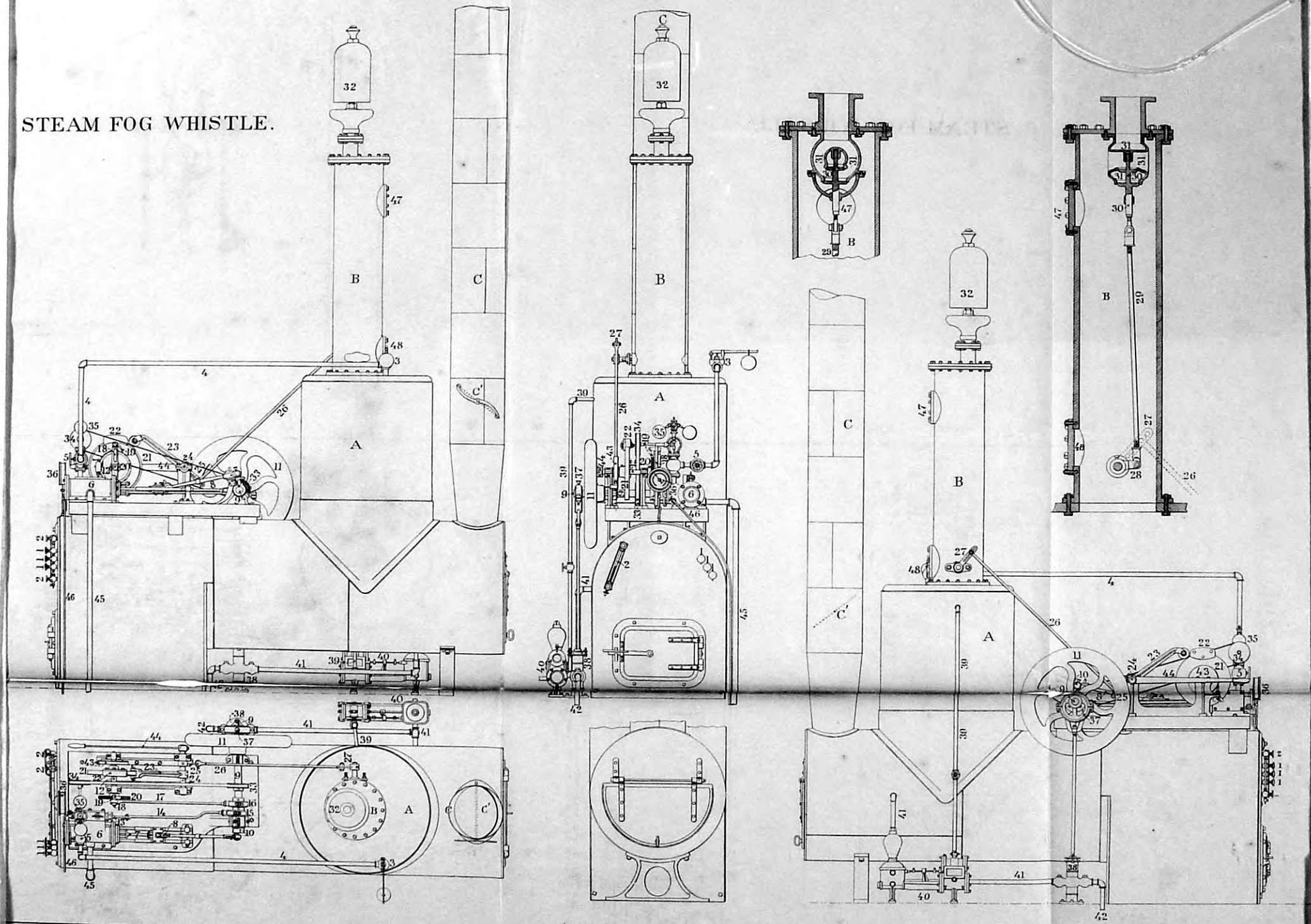

DABOLL'S FOG SIGNAL WITH ERICSSON'S CALORIC ENGINE.

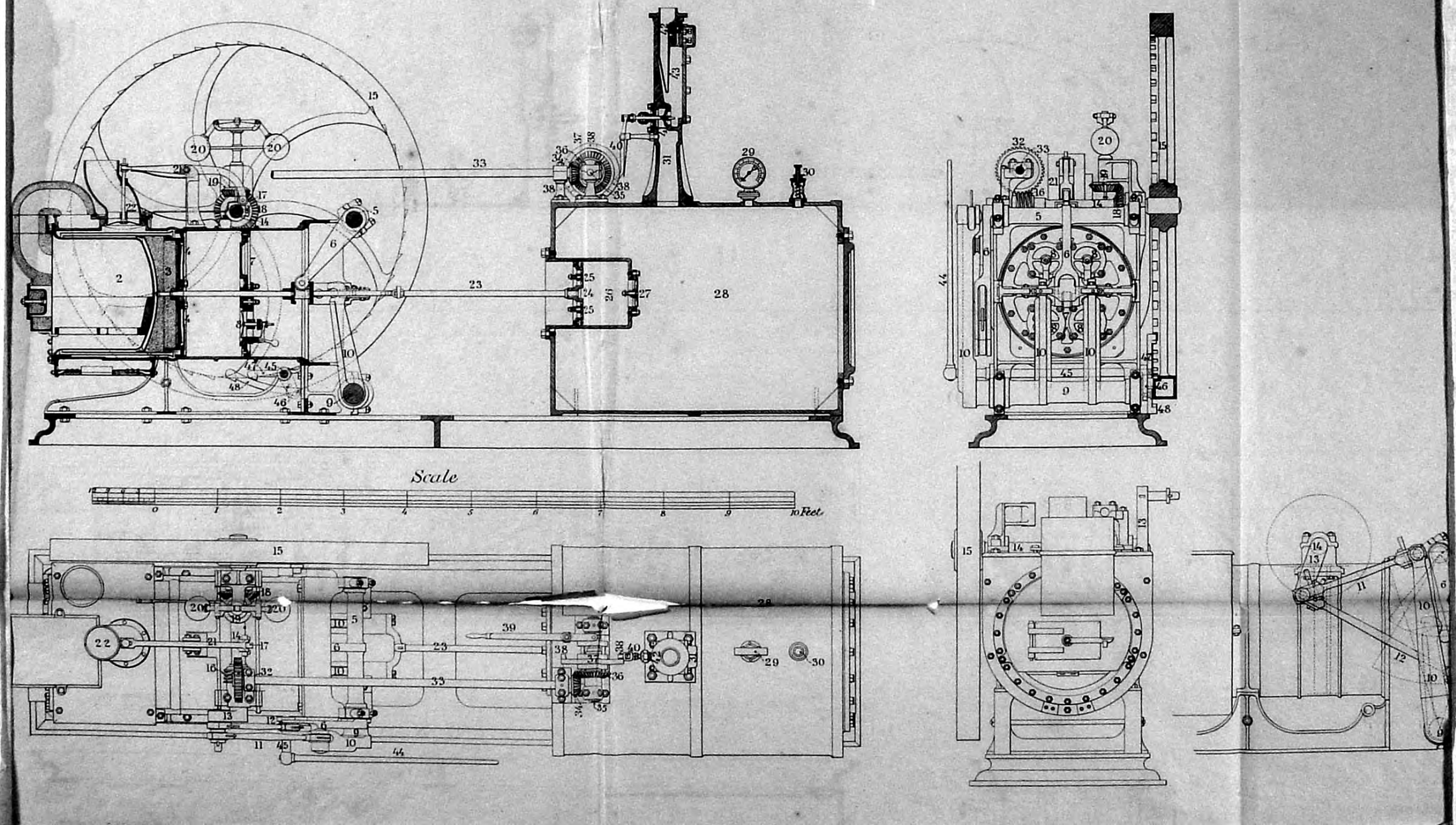

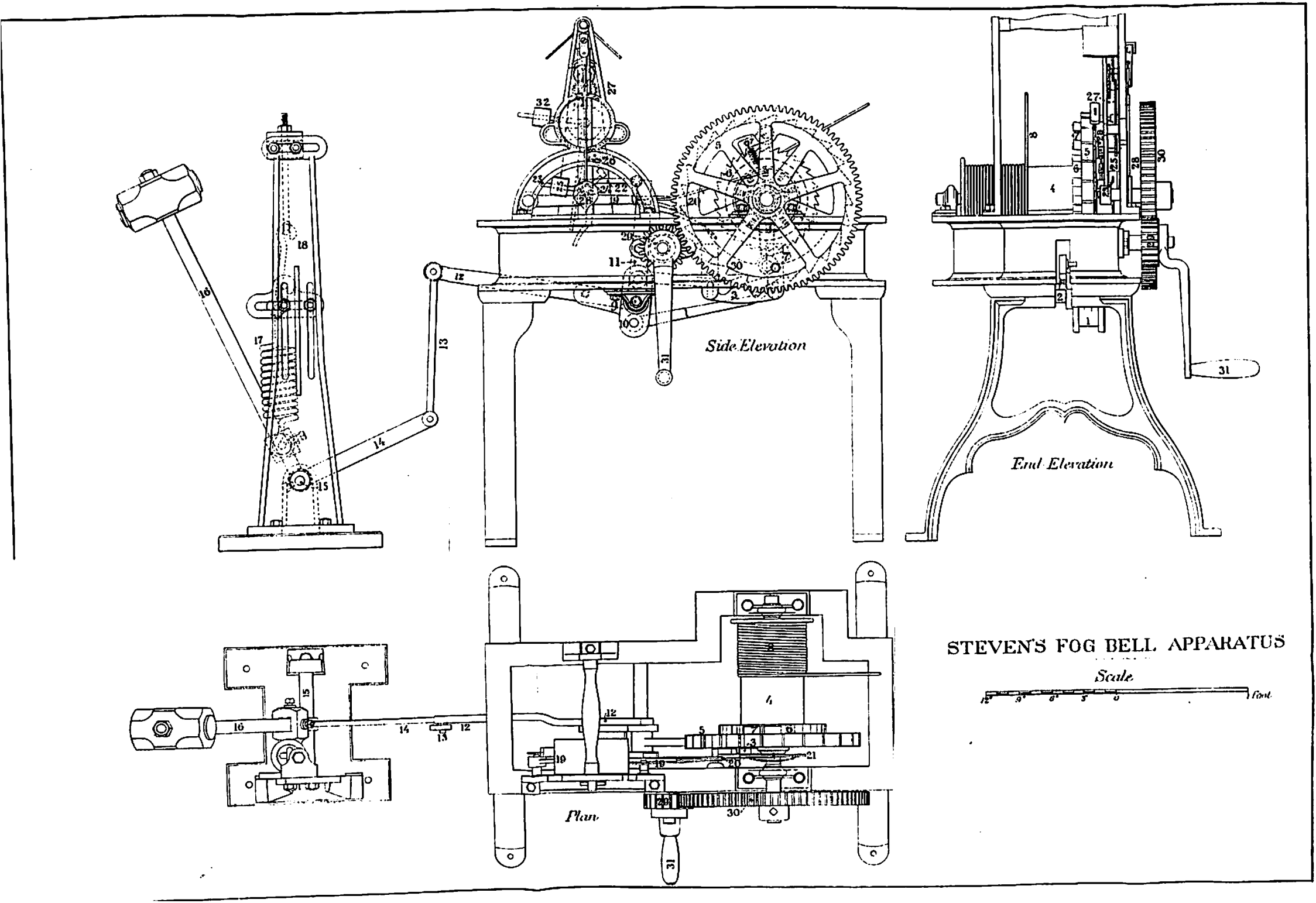

STEVEN'S FOG BELL APPARATUS

U. S. FIVE WICK MINERAL OIL LAMP

1885.

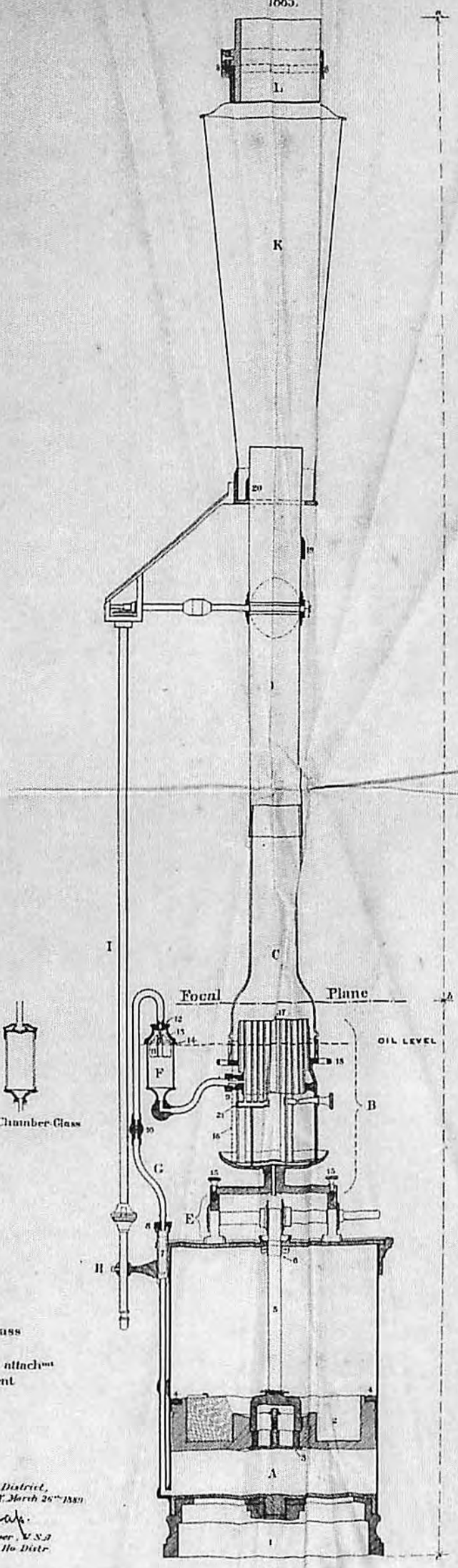

Float Chamber Glass

A Supply Reservoir
B Burner
C Chimney
D Damper tube
E Bridge
F Float Chamber-brass
G Supply tube
H Holder to Damper attachmt
I Damper attachment
K Connecting tube
L Crown piece

1 Tripod
2 Plunger
3 Plunger valve
4 Packing ring
5 Chain
6 Chain guide roller
7 Supply tube strainer
8 Supply tube nut
9 Burner nut
10 Faucet
11 Float
12 Float pin
13 Float support
14 Float chamber cap
15-15 Burner screws
16 Gauze
17 Conical air tube
18 Chimney holder
19-20 Damper tube locks
21 Cleaning tube nut

Office of Engineer 3rd L. Ho. District,
Tompkinsville N.Y. March 26th 1889

Major of Engineer, U.S.A.
Engineer 3rd L. Ho. Distr.

PLATE 12

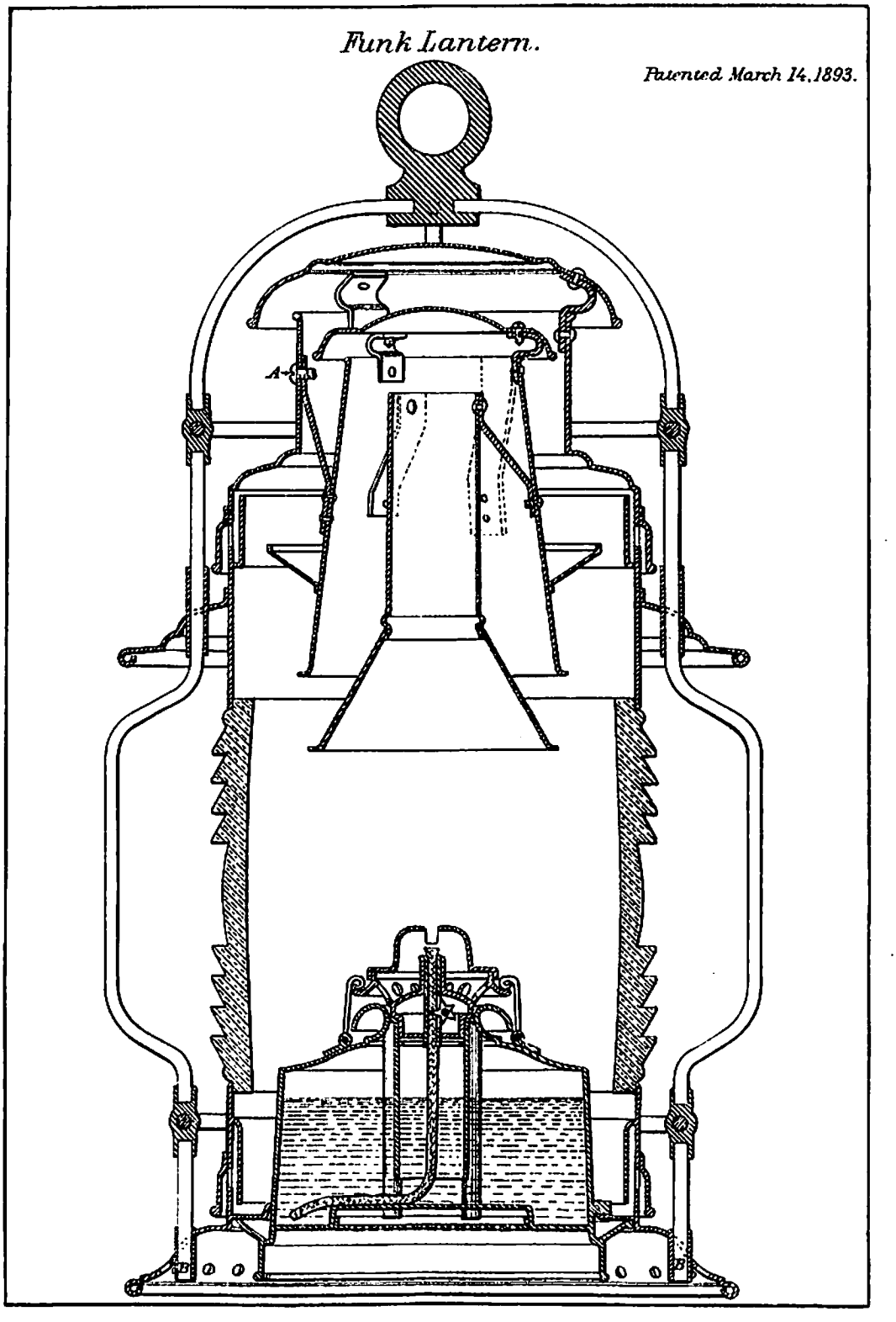

GAMEWELL FOG BELL STRIKING APPARATUS

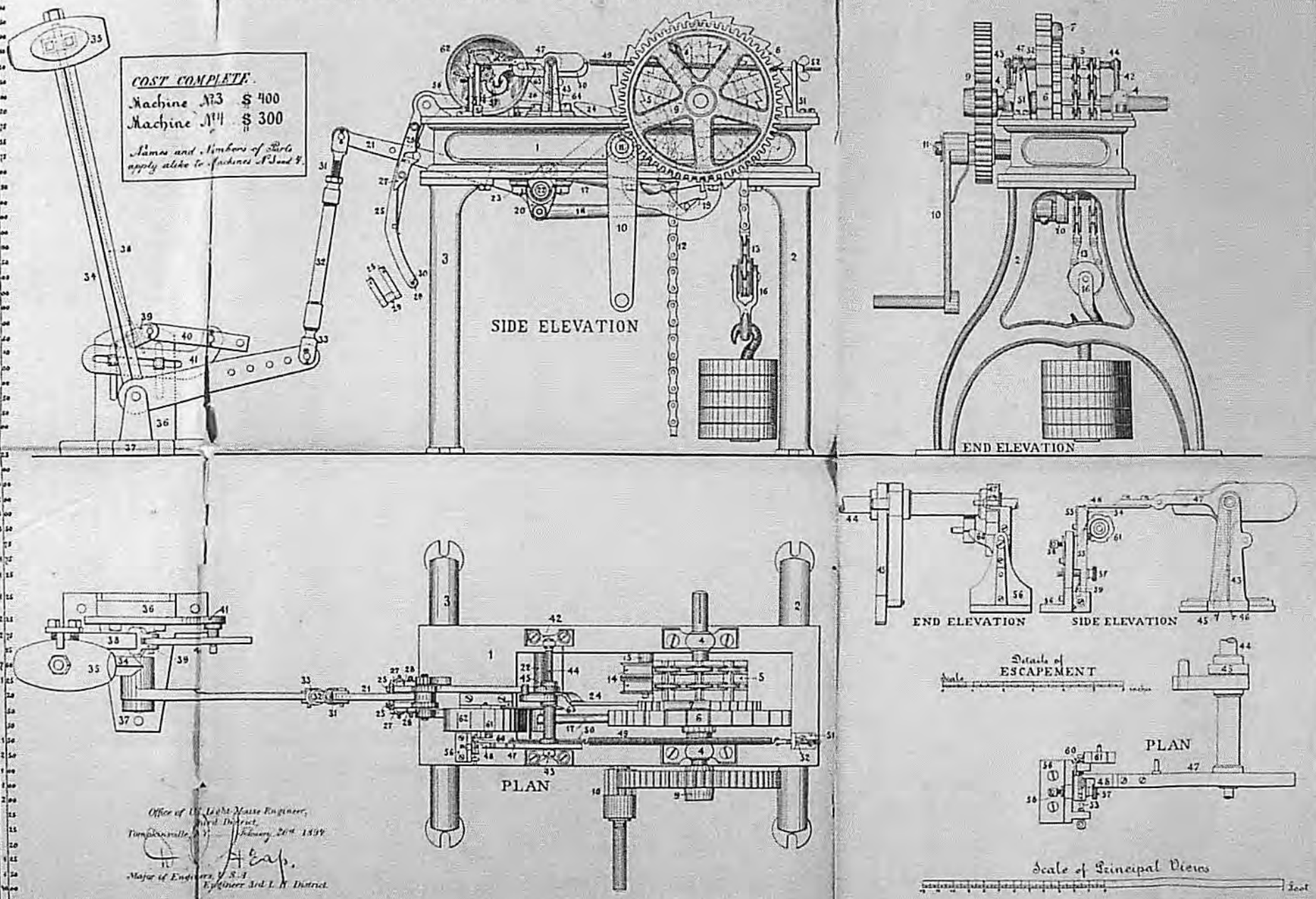

COST COMPLETE.

Machine No. 3 $ 400

Machine No. 4 $ 300

Names and Numbers of Parts apply alike to Machines No. 3 and 4.

PRICE LIST of PARTS

	Machine No. 3	Machine No. 4
1 Bed	25.00	18.00
2 Whole Leg	10.00	7.00
3 Split Leg	10.00	7.00
4 Boxes for Sprocket Shaft	6.00	4.50
5 Sprocket-Drum with Ratchet and Shaft	23.00	18.00
6 Ratchet Wheel	7.00	3.50
7 Pawl for Ratchet	2.00	1.50
8 Springs for Pawl No. 7 (long and short)	.50	.50
9 Winding Gear	5.00	4.00
10 Winding Pinion and Crank	5.00	3.50
11 Stud for Winding Pinion and Crank	2.00	1.75
12 Chain per foot	.40	.35
13 "Even-ing Chain"	2.00	1.75
14 Idler Pulleys for Chain	3.50	3.00
15 Stud for Idler Pulleys	3.00	2.50
16 "Even-ing Pulley	4.00	3.00
17 Short Striking Pallet	6.00	5.00
18 Long Striking Pallet	6.00	5.00
19 Guide for Pallets	6.00	5.00
20 "Cradle"	15.00	12.50
21 Cradle-Arm	10.00	8.00
22 Shaft for Cradle	5.00	4.00
23 Boxes for Cradle Shaft	6.00	5.00
24 Clock Winding Cam	5.00	4.00
25 Quadrant	25.00	17.50
26 Spiral Spring for Quadrant	.50	.40
27 Pawl or Click for Quadrant each	5.00	4.00
28 Latch for Quadrant, each	4.00	3.00
29 Stop Ferrule for Cradle Arm	.50	.50
30 Screw for Stop Ferrule	.50	.50
31 "Adjusting End" for Connecting Rod	3.50	3.00
32 Connecting Rod		
33 "Short End" for Connecting Rod	1.50	1.25
34 Hammer-Shaft with Lever	11.00	8.00
35 Hammer	5.00	4.00
36 Back Frame for Hammer	3.00	2.00
37 Base for Hammer	3.50	3.00
38 Hammer Spring, each	4.50	3.50
39 "Wrist Joint" Clamp	1.00	.75
40 Connection Rod for "Wrist Joint"	2.00	1.75
41 Adjustable Arm for Wrist Joint	1.50	1.25
42, 43 Stands for "Top" Shaft, each	1.50	1.25
44 "Top" Shaft	3.00	2.25
45 Figure Four Hook	3.50	2.75
46 Spring for Fig. Four Hook	.25	.25
47 Escapement Arm with Quill and "Knock Off"	10.00	7.00
48 Trip for Escapement Arm	1.50	1.25
49 Spring for Escapement Arm	.50	.20
50 Link for Spring No. 49	.50	.50
51 Stand for Spring Adjustment	.50	.50
52 Adjusting Screw and Nut for Spring No. 49	1.50	1.50
53 Detent Arm	2.50	2.50
54 Short Detent	1.50	1.00
55 Long Detent	1.50	1.00
56 Base for Detent Arm	2.50	2.00
57 Thumb-Screw for Detent Arm	.25	.25
58 Capstan-Head Screw for Detent Arm	.25	.25
59 Spring for Detent Arm	.20	.20
60 "Let-off"	1.50	1.25
61 Time Wheel	1.50	1.50
62 Clock	40.00	40.00
63 Winding Arm for Clock	1.50	1.50
64 Friction Roller for Winding Arm	.50	.50
Double Pulley	5.00	4.00

Office of U.S. Light-House Engineer,
Third District,
Tompkinsville, N.Y. February 26th 1894

H. Eap.
Major of Engineers, U.S.A.
Engineer 3rd L. H. District.