U.S. Department of
Homeland Security

United States
Coast Guard

SHIPBOARD-HELICOPTER OPERATIONAL PROCEDURES MANUAL

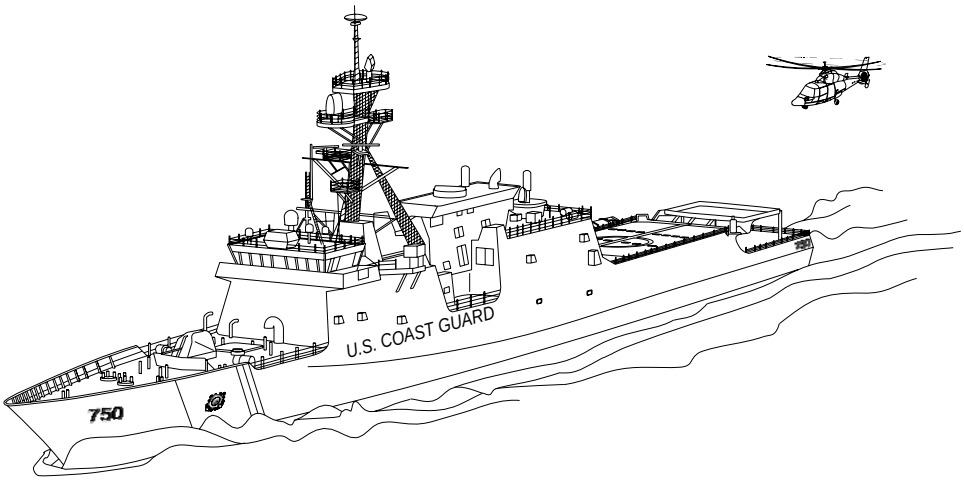

COMDTINST M3710.2E
14 February 2011

U.S. Department of Homeland Security
United States Coast Guard

Commandant
United States Coast Guard

2100 2nd ST, S.W. STOP 7359
Washington, DC 20593-7359
Staff Symbol: CG-711
Phone: (202) 372-2200
Fax: (202) 372-2907

COMDTINST M3710.2E
14 FEB 2011

COMMANDANT INSTRUCTION M3710.2E

Subj: SHIPBOARD-HELICOPTER OPERATIONAL PROCEDURES MANUAL

1. PURPOSE. This Manual promulgates a revision of the Ship-Helicopter Operational Procedures Manual.

2. ACTION. All Coast Guard unit commanders, commanding officers, officers-in-charge, deputy/assistant commandants, and chief of headquarters staff elements shall comply with the provisions of this Manual. Internet release is authorized.

3. DIRECTIVES AFFECTED. Shipboard-Helicopter Operational Procedures Manual, COMDTINST M3710.2D is cancelled.

4. MAJOR CHANGES. Major changes to the manual are summarized below, however, due to the significant revision of this Manual, a careful review is strongly recommended. This revised Manual incorporates:

   a. Interim Changes One through Six and other procedures from Commandant sent via message.

   b. Provides risk assessment guidance for contract helicopters operating with Coast Guard Ice Breakers.

   c. Establishes a single common nighttime lighting configuration for ship-board operations and allows cutter and aircraft personnel to use NVGs independent of each other.

   d. Establishes new H-65 operating limits for legacy cutters based on HH-65C DI with shaded areas depicting where increased power margins may be required.

   e. A special missions section to provide guidance for hoist operations and special mission training with flight deck equipped cutters.

5. REQUESTS FOR CHANGES. Units and individuals may recommend changes by writing via the chain of command to: Commandant (CG-711); U. S. Coast Guard 2100 2nd ST SW STOP 7359, Washington, DC 20593-7359.

DISTRIBUTION – SDL No. 156

	a	b	c	d	e	f	g	h	i	j	k	l	m	n	o	p	q	r	s	t	u	v	w	x	y	z
A	3	3			3	3																				
B	1*	3	3	1	1	2	2	2	3		3	10			1						2					
C	20*	10*						20																		
D	1*	1								1		*	1						1							
E	1																									
F																										
G																										
H																										

NON-STANDARD DISTRIBUTION: B:a CG-711 (4), CG-751 (2), CG-731 (1), CG-41 (2), CG-45 (2), CG-531 (1), CG-1131 (2); C:a: Airsta Sacraments (1); C:b: Airsta Sitka (6); D:a: Gant only (2); D:l; ATG Pearl Harbor (1), ATG Pacific (1), ATG Atlantic (1), FTG Norfolk (1), ATG Mayport (1), OPBAT (1). Note – Other cutters units will be sent an electronic copy of the manual on CD-ROM.

6. ENVIRONMENTAL ASPECT AND IMPACT CONSIDERATIONS. Environmental considerations were examined in the development of this Manual and have been determined not to be applicable.

7. FORMS/REPORTS. The forms referenced in this Manual are available in USCG Electronic Forms on the Standard Workstation or on the Internet: http://www.uscg.mil/forms; CGPortal at https://cgportal.uscg.mil/delivery/Satellite/uscg/References; and Intranet at http://cgweb.comdt.uscg.mil/CGForms.

BRIAN M. SALERNO /s/
Rear Admiral, U. S. Coast Guard
Deputy Commandant for Operations

RECORD OF CHANGES

CHANGE NUMBER	DATE OF CHANGE	DATE ENTERED	BY WHOM ENTERED
Basic	14 February 2011		

TABLE OF CONTENTS

CHAPTER 1 CONCEPT, AUTHORITY, AND POLICY
A. Introduction 1- 1
B. In this Chapter 1- 1
C. Manual Concept 1- 1
D. Authority 1- 2
E. Policy 1- 3

CHAPTER 2 ORGANIZATION
A. Introduction 2- 1
B. In this Chapter 2- 1
C. Terminology and Control 2- 1
D. Cutter Organization 2- 2
E. Cutter Billet Descriptions. 2- 7
F. Cutter Flight Quarters Staffing 2-10
G. Aviation Detachment Organization 2-12
H. Aviation Detachment Billet Descriptions 2-12
I. Aviation Detachment Personnel Assignments 2-13
J. Aviation Detachment Berthing 2-13
K. Aircraft Crew Requirements 2-13

CHAPTER 3 CERTIFICATION, QUALIFICATION, AND STANDARDIZATION
A. Introduction 3- 1
B. In this Chapter 3- 1
C. Cutter Certification 3- 1
D. Cutter Qualification 3- 7
E. Cutter Personnel Qualification and Training 3- 8
F. Pilot Qualification and Training. 3- 9
G. Aircrew Qualification and Training 3-10
H. Air Station Standardization Visits 3-15

CHAPTER 4 EQUIPMENT AND MATERIALS
A. Introduction 4- 1
B. In this Chapter 4- 1
C. Equipment 4- 1
D. Personal Protective Equipment (PPE) and Clothing 4- 1
E. Flight Deck Operating Criteria and VLA. 4-19

CHAPTER 5 PLANNING, LIMITATIONS, COMMUNICATIONS, AND NAVIGATION
A. Introduction 5- 1
B. In this Chapter 5- 1

C. Mission Planning 5- 1
D. Flight Deck Motion Limitations 5- 4
E. Weather Considerations and Limitations 5- 6
F. Helicopter and Aircrew Limitations 5- 9
G. Communications and Navigation 5-10

CHAPTER 6 LAUNCH AND RECOVERY PROCEDURES
A. Introduction 6- 1
B. In this Chapter 6- 1
C. Cutter Preparation 6- 1
D. Flight Quarters 6- 4
E. Flight Quarters Billet Responsibilities 6- 6
F. Engine Start and Rotor Engagement 6-12
G. Launch Procedures 6-15
H. Traffic Pattern 6-17
I. General Recovery Procedures 6-17
J. Shutdown Phase 6-24
K. Post-Shutdown 6-25
L. Waveoff 6-26
M. Oblique (Angled) Lineup Line Operations 6-27
N. Athwartships Procedures 6-30
O. Nighttime Recovery 6-31

CHAPTER 7 AIR TRAFFIC CONTROL AND INSTRUMENT APPROACH PROCEDURES
A. Introduction 7- 1
B. In this Chapter 7- 1
C. Responsibilities 7- 1
D. Control 7- 2
E. Communications 7- 6
F. Departure Procedures 7- 6
G. Arrival Procedures 7- 7
H. Flight Following Procedures 7- 7
I. Approach Procedures. 7-12

CHAPTER 8 AVIATION FUEL HANDLING
A. Introduction 8- 1
B. In this Chapter 8- 1
C. General Fuel Information 8- 1
D. Fuel System Equipment 8- 6
E. Fuel System Design 8-10

F. Fuel Tests and Inspections 8-15
G. Fuel Maintenance Procedures 8-25
H. Fuel Safety Precautions 8-30

CHAPTER 9 HELICOPTER REFUELING PROCEDURES
A. Introduction 9- 1
B. In this Chapter 9- 1
C. Refueling Methods 9- 1
D. Refueling Procedures 9- 3
E. Contaminated Fuel 9-17
F. Defueling Procedures 9-17

CHAPTER 10 VERTICAL REPLENISHMENT (VERTREP)
A. Introduction 10- 1
B. In this Chapter 10- 1
C. VERTREP General Information 10- 1
D. VERTREP Mission Planning 10- 2
E. VERTREP Equipment 10- 2
F. VERTREP Load Preparation 10-10
G. VERTREP Procedures 10-16
H. Nighttime VERTREP 10-24

CHAPTER 11 HELICOPTER SECURING AND TRAVERSING
A. Introduction 11- 1
B. In this Chapter 11- 1
C. General Information 11- 1
D. Mooring Aids 11- 3
E. Primary Tiedowns 11- 7
F. Secondary Tiedowns 11-16
G. Heavy Weather Tiedowns 11-18
H. Blade Security 11-19
I. Traversing 11-21
J. Helicopter Security and Fire Checks 11-27

CHAPTER 12 SHIPBOARD HELICOPTER MAINTENANCE
A. Introduction 12- 1
B. In this Chapter 12- 1
C. Predeployment Maintenance 12- 1
D. Helicopter Support Kit 12- 1
E. WMSL, WHEC, and WMEC Deployments 12- 1
F. WAGB Deployments 12- 1

G. Deployment Maintenance 12- 2

CHAPTER 13 WATER SALVAGE OPERATIONS
A. Introduction 13- 1
B. In this Chapter 13- 1
C. Salvage Responsibilities 13- 1
D. Salvage Personnel. 13- 1
E. Salvage Safety 13- 2
F. Salvage Equipment 13- 3
G. Salvage Priorities 13- 3
H. Salvage Procedures 13- 3
I. Salvage Special Considerations 13- 5

CHAPTER 14 FLIGHT DECK FIRE FIGHTING
A. Introduction 14- 1
B. In this Chapter 14- 1
C. General Flight Deck Fire Fighting Information 14- 1
D. Classification of Fires 14- 2
E. General Hazards and Precautions 14- 3
F. Fire Fighting Agents 14- 7
G. Fire Fighting Equipment 14-11
H. Fire Party Organization 14-15
I. Crash With Class B Fire 14-16
J. Other Fires 14-25
K. Jettisoning the Helicopter 14-26

CHAPTER 15 SPECIAL MISSIONS
A. Introduction 15- 1
B. In this Chapter 15- 1
C. Cutter Preparation 15- 1
D. Special Missions 15- 2
E. Emission Control (EMCON) Operations 15- 2

GLOSSARY

APPENDIX A
Shipboard-Helicopter Certification, Qualification, and Standardization Program

APPENDIX B
Relative Wind and Ship Motion Envelopes for Shipboard-Helicopter Operations

APPENDIX C
Signals

APPENDIX D
Aircraft Pre-Accident Plan

APPENDIX E
Coast Guard Helicopter Operating Capabilities

APPENDIX F
Air Station Deployment Checklist

APPENDIX G
Air Direction Control Communications Doctrine

APPENDIX H
Checklists

CHAPTER 1. CONCEPT, AUTHORITY, AND POLICY.

A. INTRODUCTION. The safe and efficient operation of helicopters from Coast Guard cutters and other air capable ships requires a high degree of skill, training, and coordination. A thorough understanding of the procedures and policies involved is required to safely and effectively accomplish missions and avoid mishaps.

B. IN THIS CHAPTER. This chapter discusses the following topics:

1. Manual Concept.
2. Authority.
3. Policy.

C. MANUAL CONCEPT.

1. Overview. This Manual provides the primary source of information for operation of the shipboard-helicopter (ship-helo) team in the execution of all Coast Guard missions. This Manual contains specific direction and guidance, and serves as a reference to other directives and publications.

2. Application. The policies, standards, and procedures set forth in the Coast Guard Air Operations Manual, COMDTINST M3710.1 (series) and this Manual are applicable to all Coast Guard ship-helo operations. Records discussed throughout this Manual will be maintained in accordance with the Information and Life Cycle Management Manual, COMDTINST M5212.12 (series). Questions pertaining to the content of this Manual should be referred to Commandant (CG-711) or the Ship-Helo Branch, Aviation Training Center (ATC) Mobile.

   a. Deviations. Adherence to the provisions of this Manual is essential to the safety of ship-helo operations. Where mission urgency dictates, deviations from the provisions of this Manual are authorized, but require the concurrence of the Senior Aviator, Pilot In Command (PIC), and the cutter Commanding Officer (CO). If a deviation occurs, Commandant (CG-711) shall be advised by message via the chain of command of the nature of the deviation and the prevailing circumstances. The Ship-Helo Branch, ATC Mobile shall be an info addressee.

   b. Waivers. COs of Coast Guard cutters and air stations may request waivers to specific provisions of this Manual from Commandant (CG-711), via the chain of command. Each request shall contain justification for requesting the waiver and an analysis of its impact on mission safety. Waivers shall be considered on a case-by-case basis and will be granted only when mission safety will not be jeopardized. The Ship-Helo Branch, ATC Mobile shall be an info addressee.

   c. Amendments. The Ship-Helo Branch, ATC Mobile is responsible for reviewing and submitting recommended amendments to this Manual. Direct liaison between ATC Mobile and other commands is authorized. Commands are encouraged to comment and make recommendations to ATC Mobile. An information copy of all written correspondence concerning the content of this Manual shall be forwarded to Commandant (CG-711).

3. Warning, Cautions, and Notes. The following definitions apply to Warnings, Cautions, and Notes found throughout this Manual:

WARNING

OPERATING PROCEDURES, TECHNIQUES, PRACTICES, OR CONDITIONS WHICH MAY RESULT IN PERSONAL INJURY OR LOSS OF LIFE IF NOT CAREFULLY OBSERVED OR FOLLOWED.

CAUTION

OPERATING PROCEDURES, TECHNIQUES, PRACTICES, OR CONDITIONS WHICH MAY RESULT IN DAMAGE TO EQUIPMENT IF NOT CAREFULLY OBSERVED OR FOLLOWED.

NOTE

Operating procedures, techniques, practices, or conditions that are considered essential to emphasize.

4. Wording. These words, followed by their intended meanings, are used in this Manual:

   a. Shall has been used when application of a procedure is mandatory.

   b. Should has been used when application of a procedure is highly recommended.

   c. May and need not have been used when application of a procedure is optional.

   d. Will has been used to indicate futurity and never to indicate any degree of requirement for, or application of, a procedure.

D. AUTHORITY.

1. Overview. The Commandant has primary authority for the operation of aircraft in the Coast Guard. Subordinate commanders may be delegated authority for flights to accomplish various missions.

2. Authority for Flights. Cutter COs with aircraft embarked or deployed are authorized to initiate flights in support of Coast Guard missions subject to the policy set forth in the Coast Guard Air Operations Manual, COMDTINST M3710.1 (series).

3. Authority for Clearance.

   a. Definition. For this paragraph, clearance is defined as military permission to execute a specific aircraft movement (helicopter start and rotor engagement with intent for flight). It is not to be confused with Air Traffic Control (ATC) clearance that is required for flight under instrument conditions in controlled airspace, or with clearances for evolutions contained in this Manual.

   b. Coast Guard Aircraft. Chapter 2 of the Coast Guard Air Operations Manual, COMDTINST M3710.1 (series) provides clearance policy for Coast Guard aircraft.

(1) COs of cutters with Coast Guard aircraft under their operational control have the same responsibility and exercise the same authority to initiate flight as that granted to COs of aviation units.

(2) The CO, Senior Aviator, and PIC each have the responsibility and authority to cancel a flight if, in their judgment, the flight cannot be initiated, continued, or completed without undue risk. However, once the flight is approved, the PIC has final responsibility for the safe conduct of the mission.

c. Other Agency Aircraft. Aircraft of other military and government agencies shall be granted clearance in accordance with (IAW) their parent agency directives. However, cutter COs shall refuse clearance for these aircraft if, in their judgment, safety of the cutter or cutter personnel is unduly jeopardized.

d. Passenger Transportation. Cutter COs with aircraft under their operational control may authorize transportation of passengers in categories designated for approval by COs. For additional guidance, refer to the Coast Guard Air Operations Manual, COMDTINST M3710.1 (series).

e. Transportation of Cargo. Policy contained in Coast Guard Air Operations Manual, COMDTINST M3710.1 (series) applies.

NOTE

Transportation of personnel on emergency leave does not constitute an emergency for purposes of this section. Such transportation shall be considered as in the same category as “logistics and other.”

E. POLICY.

1. Overview. Certain key points of policy intended to provide cutter COs with guidance to enhance the safety and effectiveness of ship-helo operations are prescribed in this chapter.

2. General Mission Decisions.

a. Cutter COs with deployed aircraft are faced with making mission decisions involving risks to aircrews and equipment. The CO shall carefully weigh the urgency of each mission and assess the benefits to be gained versus the risks involved. In essence, the cutter CO is placed in a situation similar to that of an air station CO, but without the benefit of personal aviation experience. For this reason, the counsel of the Senior Aviator shall be solicited and considered. While not all possible contingencies can be addressed, established policy guidelines exist to assist cutter COs in making risk-versus-gain analyses for various ship-helo missions. Refer to Chapter 5.

b. The CO has overall responsibility for control of flight operations and shall be familiar with all types of flight evolutions and flight quarters staffing responsibilities.

3. Aircrew Survival and Recovery. Mission planning for any helicopter operation shall include an assessment of aircrew survivability. This assessment shall be based on the possibility that the aircrew might be forced into a survival situation during any phase of the flight. Planning shall consider whether the aircrew could be recovered within the survival time for the worst anticipated condition. Survival and rescue are discussed in accordance with the Information and Life Cycle Management Manual, COMDTINST M5212.12 (series), U.S. Coast Guard Addendum to the United States National Search and Rescue Supplement (NSS) to the International Aeronautical and Maritime Search and Rescue Manual (IAMSAR), COMDTINST M16130.2 (series), and the Coast Guard Air Operations Manual, COMDTINST M3710.1 (series), and apply to ship-helo mission planning. Refer to the above Manuals for guidance, particularly the Coast Guard Air Operations Manual, COMDTINST M3710.1 (series).

4. Helicopter Operations with Coast Guard Cutters.

   a. Coast Guard Helicopter. Landing of Coast Guard helicopters is authorized on any Coast Guard cutter, provided the following conditions are met:

      (1) The cutter is certified to operate with the specific model of helicopter and is qualified to conduct helicopter operations.

      (2) Flight deck wind and ship motion does not exceed the limits specified in Appendix B for the particular ship-helo combination, or the general limits specified in Figure B-1, if limits are not otherwise defined.

      (3) The PIC is qualified for shipboard operations according to the requirements of Chapter 3, or in the case of an emergency, has a clear understanding of the cutter's flight deck procedures.

   b. Joint Service Procedures. Joint Publication 3-04.1 (Joint Tactics, Techniques, and Procedures for Shipboard Helicopter Operations) provides guidance and standard operating procedures (SOP) to plan, coordinate, and conduct joint shipboard helicopter operations for U.S. Army and U.S. Air Force aircraft with U.S. Navy and U.S. Coast Guard ships. The procedures contained in Joint Publication 3-04.1 are nearly identical to those outlined in Naval Warfare Publication (NWP) 3-04.1 and this Manual. Coast Guard aircrews shall continue to follow procedures outlined in these service Manuals.

   c. Other Military and U.S. Government Helicopters. Landing of U.S. Navy, U.S. Marine Corps, U.S. Army, U.S. Air Force, and nonmilitary U.S. Government helicopters aboard Coast Guard cutters is authorized, provided that the following conditions are met:

      (1) The cutter is certified to operate with the specific model of helicopter and qualified to conduct helicopter operations.

      (2) The operational procedures contained in this Manual apply and are clearly understood by the PIC.

(3) Flight deck wind and ship motion does not exceed the limits specified in Appendix B for the particular ship-helo combination, or the general limits specified in Figure B-1, if limits are not otherwise defined.

(4) The helicopter PIC is qualified for ship-helo operations IAW parent service directives.

(5) Operations are conducted only in day visual meteorological conditions (VMC), unless the PIC is specifically qualified for night and/or instrument meteorological conditions (IMC) ship-helo operations.

NOTE

Where procedures differ between services, the procedures of the vessel's parent service shall take precedence.

NOTE

The importance of premission briefs and training sessions between the aircrew and flight quarter's personnel cannot be overemphasized. The increased risk exposure of these operations shall be counterbalanced with briefings and static, on-deck training. Serious consideration shall be given to canceling a proposed operation if no opportunity exists for a briefing between the cutter and aircrew.

d. Other Helicopters. Shipboard landings by helicopters not previously discussed in Paragraph 1.E.4.c.are authorized but shall be attempted only if the following conditions are met:

(1) The cutter is certified to operate with the specific model of helicopter and qualified to conduct helicopter operations.

(2) The procedures contained in this Manual are followed and are clearly understood by the Pilot in Command (PIC).

(3) Flight deck wind and ship motion do not exceed the limits shown in Figure B-1.

(4) The operation is conducted in day VMC.

(5) The notes for Paragraph 1.E.4.c. are followed.

(6) The decision to install tiedowns while the rotor blades are turning at 100% shall consider the risks of an unfamiliar aircraft and rotor blade droop against the effects of wind and ship motion on the aircraft.

5. Landing of Coast Guard Helicopters on Other Military Ships. Landing Coast Guard helicopters on other flight deck-equipped military ships is authorized, provided that the following conditions are met:

a. The ship is certified to conduct flight operations.

b. The ship is qualified to conduct flight operations IAW parent service directives.

c. Flight deck wind and ship motion do not exceed the lesser of:

(1) Limits specified in Appendix B for the particular ship-helo combination.

(2) Limits shown in Figure B-1, if no other limits are specified in Appendix B.

(3) Limits established in the directives of the ship's parent service.

d. The PIC is qualified to conduct ship-helo operations. In situations where the PIC has lapsed shipboard qualification, but the Pilot at Controls (PAC) is qualified and current for the specific evolution, the PAC may conduct operations with the ship.

e. The PIC and/or PAC clearly understand the ship's flight deck arrangement and operational procedures.

f. If mooring chains are to be attached while the rotor is turning, the vessel's flight deck personnel understand that they are to be attached only to mooring rings on the helicopter's main landing gear and with sufficient slack to prevent the possibility of ground resonance.

NOTE

The certification requirement may be waived for urgent operational missions provided the following criteria can be met:

1. Safe landing can be accomplished with the minimum buffer distance required for the specific aircraft type. Maximum obstruction heights and minimum required buffer distances for each type of aircraft are specified in Air Capable Ships Aviation Facilities Bulletin 1 (series).
2. Obstructions to landing gear can be avoided.
3. Flight deck strength is adequate.
4. Where procedures differ between services, the procedures of the vessel's parent service shall take precedence.

g. U.S. Navy ship-helo operational procedures are set forth in The Helicopter Operating Procedures for Air-Capable Ship NATOPS Manual, NAVAIR 00-80T-122. Flight deck dimensions and other pertinent information for U.S. Navy and Coast Guard cutters are contained in the Shipboard Aviation Facilities Resume, NAEC-ENG-7576 (series).

h. Ship-Helo operational procedures for North Atlantic Treaty Organization (NATO) navies are discussed in Helicopter Operations From Ships Other Than Aircraft Carriers (HOSTAC), APP-2 (series). Flight deck dimensions and other pertinent information are contained in the HOSTAC Supplement. IAN-HOSTAC and PAC-HOSTAC contain information on Inter-American and Pacific naval vessels.

6. Landing of Coast Guard Helicopters on Nonmilitary Vessels. Landing of Coast Guard helicopters on nonmilitary vessels is authorized only for urgent missions, provided the following conditions are met:

a. Clear approach and departure paths are provided.

b. Safe landing can be accomplished with a minimum of 10 feet of buffer distance between the rotors (including tail rotor) and the nearest obstruction above 24 inches for H-65 helicopters, or 48 inches for H-60 helicopters.

c. Obstructions to landing gear can be avoided.

d. Landing area strength is adequate.

e. Flight deck wind and ship motion do not exceed the limits shown in Appendix B, Figure B-1.

f. The PIC is qualified to conduct ship-helo operations. In situations where the PIC has lapsed shipboard qualification, but the PAC is qualified and current for the specific evolution, the PAC may conduct operations with the ship, with the concurrence of the PIC.

g. No attempt is made to tiedown the helicopter or secure the rotors.

h. The operation is conducted in VMC.

7. Contract Helicopters Operating with Coast Guard Ice Breakers.

NOTE

Unless all provisions of Paragraph 1.E.4.d. are met, a waiver from Commandant (CG-711) is required to operate with contract helicopters.

NOTE

Restricted Operations is the flight envelope of no lower than 300 feet and no slower than 40 knots originating and recovering at a ship or other prepared aviation facility.

NOTE

Operational Limit is the range of the aircraft as limited by fuel, precise navigation capability, two-way communications, and weather.

a. The radius of action for contract aircraft operating from Coast Guard Ice Breakers shall comply with the following whenever there is eight-tenths ice coverage or greater exists with a minimum thickness of 12 inches:

(1) A single engine aircraft with no backup aircraft available may conduct unrestricted operations within a radius of action of 50 nm from the ship or its operational limit, whichever is less.

(2) A single dual engine aircraft with no backup aircraft available may conduct restricted operations within a radius of action equal to its operational limit.

(3) Single helicopter operations to remote areas inaccessible to the ship where the ship is the only SAR resource available are prohibited.

(4) Two aircraft may conduct unrestricted operations within a radius of action equal to their operational limit.

b. If less than eight-tenths ice coverage exists or ice thickness is less than 12 inches, shipboard helicopter operations shall be considered as occurring in open water:

(1) The radius of action of a single engine aircraft shall be predicated upon the estimated time to recover the aircrew and passengers based on current ice conditions and the estimated time to loss of useful consciousness derived from Figure 4-1 in Chapter 4, Section J, of Coast Guard Air Operations Manual, COMDTINST M3710.1 (series). In no case shall the time associated with the estimated loss of useful consciousness be shorter than the estimated time to recovery in the event of a mishap.

(2) A single dual engine aircraft with no backup aircraft available may conduct restricted operations within a radius of action equal to its operational limit.

(3) Single helicopter operations to remote areas inaccessible to the ship where the ship is the only SAR resource available are prohibited.

(4) Two aircraft may conduct unrestricted operations within a radius of action equal to their operational limit.

8. VERTREP.

a. All flight deck-equipped Coast Guard cutters should be certified and qualified to conduct Vertical Replenishment (VERTREP) with the Coast Guard and Department of Defense (DOD) helicopters specified in Chapter 3, Table 3-1, and are authorized to do so. Refer to Chapter 10 for specific procedures.

b. Coast Guard helicopters are authorized to conduct VERTREP with appropriately certified and qualified vessels. VERTREP may be conducted with Coast Guard cutters that are not certified or qualified provided procedures outlined in Chapter 10 are followed.

9. HIFR.

   a. All flight deck equipped Coast Guard cutters should be certified and qualified to conduct Helicopter in Flight Refueling (HIFR) with the Coast Guard and Navy helicopters specified in Chapter 3, Table 3-1. Refer to Chapter 9 for specific procedures.

   b. Coast Guard H-65s are authorized to conduct HIFR with all HIFR-certified Coast Guard Cutters and with those HIFR-certified U.S. Navy ships whose JP-5 systems incorporate an installed GO-NO-GO fuel monitor. Coast Guard H-60s have a GO-NO-GO monitor incorporated into the HIFR receptacle and are authorized to conduct HIFR with all HIFR-certified ships. Navy HIFR procedures are established in NAVAIR 00-80T-122.

WARNING

HIFR SHALL NOT BE USED TO EXTEND THE RANGE OF A COAST GUARD HELICOPTER BEYOND A POINT FROM WHICH, IN THE EVENT OF SUBSEQUENT HIFR EQUIPMENT FAILURE, A SAFE LANDING SITE (SHIPBOARD OR ASHORE) COULD BE REACHED.

10. Night Vision Goggle (NVG) Evolutions. The use of NVGs affords pilots, aircrews, and flight deck crews with improved night vision acuity. NVG operation provides increased safety and operational capabilities over nighttime unaided flight operations. However, inherent NVG limitations (ie, field of view, depth perception, and environmental interference) require comprehensive training, awareness, and strict compliance with established procedures to ensure safe and effective nighttime flight operations aboard cutters. NVGs shall be Aviator Night Vision Imaging System (ANVIS) 9 generation or better.

   a. Night and NVG Standardization. Shipboard lighting configurations have been standardized for ALL nighttime helicopter operations, including aided and unaided evolutions. The term "nighttime" refers to any operation between sunset and sunrise, regardless of whether NVGs are used by pilots or LSOs. The mixed use of NVGs is authorized (i.e., pilots may use NVGs while the LSO is unaided or vice versa).

   b. NVG Operations Authority. The NVG operation procedures in this Manual apply to all NVG flight deck equipped cutters involving USCG, USN, USMC, USA, USAF, DEA, U.S. Customs, and foreign services. All cutters, units, and personnel involved in or anticipating involvement in shipboard aviation NVG evolutions shall be familiar with and comply with all parent service directives pertaining to NVG flight operations. In case of conflict, this Manual shall take precedence except as noted below.

NOTE

All DoD special operations shall be guided by current Memorandums of Understanding (MOU) and Letters of Intent (LOI). If conflict arises concerning shipboard use of NVGs for a special operation, the MOU or LOI shall take precedence over guidance or provisions of this Manual.

c. NVG Requirements and Limitations. Maintaining of flight deck safety is the major concern during shipboard nighttime operations. NVGs shall only be used when the following conditions are met:

(1) All NVG evolutions require a discernible, visible horizon. NVGs may be used in determining the presence of a visible horizon.

(2) NVGs operate on the principle of ambient light amplification. Operation under extremely low light conditions (i.e., moonless, overcast night) diminishes the performance of NVGs and renders them less useful both operationally and as a safety tool. NVG evolutions conducted under extremely low light levels should be conducted only when an extensive risk assessment is conducted, and approved by the CO. Anticipated illumination levels may be degraded by cloud cover, humidity, dust, low moon angle, etc. A decision to fly in conditions that are less than optimal shall be tempered with sound judgment and err on the side of safety.

11. Dynamic Interface Trials. Each combination of helicopter and ship has unique factors (i.e., ship obstructions, helicopter hovering characteristics, etc.) that affect the ship motion and relative wind envelopes considered safe for ship-helo operations. Dynamic Interface (DI) trials are conducted to determine these envelopes. All approved ship-helo operating envelopes are depicted in Appendix B. Operations with various ship and helicopter combinations for which Dynamic Interface trials have not been conducted shall be restricted to the General Launch and Recovery Limitations shown in Figure B-1.

a. Occasions Requiring DI Trials. Trials shall be conducted:

(1) Any time a ship class receives major structural modifications to its flight facilities that potentially change the relative wind or pitch and roll effects on the flight deck.

(2) Any time a significant structural modification is made to a model of helicopter or ship class that may affect existing limitations.

b. Coast Guard Helicopters on Coast Guard Cutters . DI trials will be conducted as prescribed by Navy procedures.

c. Navy Helicopters on Coast Guard Cutters and Coast Guard Helicopters on Navy Ships. DI trials will be conducted as prescribed by Navy procedures.

d. Coast Guard Helicopters on Other Ships. DI trials will be conducted as agreed upon by the Commandant (CG-711) and the vessel's parent organization.

e. Flight Operations While Towing Another Vessel.

(1) There may be situations that require flight operations while towing another vessel. In these situations, extreme care shall be given to ensure safe launch and recovery of the helicopter.

(2) On cutters with fore and aft center line approaches, extreme care shall be given to maintain a safe distance from the towed vessel during the approach. While on approach, minimum time shall be spent between the cutter and towed vessel.

(3) If concern exists that the towline or towed vessel hardware may part during towing, launch and recovery of the helicopter shall be terminated.

(4) The rescue boat shall be ready at the gunwale, with the rescue crew available for immediate launch with a vessel in tow due to the limited maneuverability of the cutter during flight operations.

NOTE

Training and non-operational flights are prohibited while towing another vessel. Night launch and recoveries while towing another vessel are prohibited except for urgent SAR.

12. Deployment Requirements. Submit a post-deployment cruise report with a copy to Commandant (CG-711, CG-41, CG-1131), and Ship-Helo Branch, ATC Mobile. The exact format of this report is at the discretion of each unit. However, since these reports aid in providing information regarding potential problems critical to future deployments, the following data shall be captured:

a. Aviation facility support issues.

b. The number of days the aircraft was secured in the hangar or reasons why the hangar was not used.

c. Policy conflicts or confusion.

d. Aviation Detachment (AVDET) berthing issues affecting mission accomplishment.

e. Recommendations that could improve future deployments.

f. Use the Deployment Checklist provided in Appendix H for further guidance and deployment requirements.

CHAPTER 2. ORGANIZATION.

A. INTRODUCTION. The organizational relationship between helicopters and cutters will depend on the nature and duration of the mission, which may range from a brief series of practice operations with a single helicopter and crew to a lengthy deployment with multiple helicopters and a full AVDET.

B. IN THIS CHAPTER. This chapter discusses the following topics:

1. Terminology and Control.
2. Cutter Organization.
3. Cutter Billet Descriptions.
4. Cutter Flight Quarters Staffing.
5. AVDET Organization.
6. AVDET Billet Descriptions.
7. AVDET Personnel Assignments.
8. AVDET Berthing.
9. Aircraft Crew Requirements.

C. TERMINOLOGY AND CONTROL.

1. Embarkation Versus Deployment.

   a. Generally, a helicopter and crew should be considered as embarked for single missions of short duration when mission requirements and length do not require the use of a Helicopter Support Kit (HSK).

   b. A deployed helicopter and crew are normally assigned to a particular cutter for longer, more complex missions and are accompanied by an HSK.

2. Control of Helicopters and Aircrew. If an AVDET is to be embarked or deployed, the ordering authority shall indicate whether the AVDET will be performing missions under the tactical control (TACON), operational control (OPCON), and/or administrative control (ADCON) of the cutter. Appendix F contains further guidance on deployments.

   a. When an AVDET is embarked, OPCON and ADCON normally remain with the parent command. However, the cutter will normally exercise TACON.

   b. For short deployments of approximately 6 weeks or less, OPCON is normally transferred to the cutter, while ADCON remains with the parent command. Deploying aircrews should take health records to the cutter.

   c. For long deployments of approximately 6 weeks or greater, both OPCON and ADCON (including personnel records, health records, and leave granting authority) are normally transferred to the cutter.

d. For deployments in support of Navy missions (operational Commander in Chief, Navy (CINC) deployments), if the Navy has OPCON and TACON over the cutter and assigned aircraft, then the Navy controlling element has authority over AVDET missions. Cutter COs and AVDET Senior Aviators shall be cognizant that policy differences between the Navy and the Coast Guard exist. When differences occur, and Coast Guard policy is more restrictive, Coast Guard policy shall take precedence.

D. CUTTER ORGANIZATION.

1. Overview.

a. Each flight-deck equipped cutter shall create a Helicopter Operations Bill providing for the operation of helicopters, either deployed, embarked, or transient.

b. The bill shall be consistent with the organization and billet descriptions set forth in the following paragraphs.

c. The number of people engaged in a helicopter operation should be kept to the minimum needed to safely conduct the operation, consistent with the specific requirements of this chapter.

d. The CO has overall responsibility for control of flight operations and shall be familiar with all types of flight evolutions, to include flight quarters staffing responsibilities.

e. The CO is responsible for periodically reviewing the cutter's Helicopter Operations Bill.

f. The overall cutter organization for flight operations is depicted in Figure 2-1.

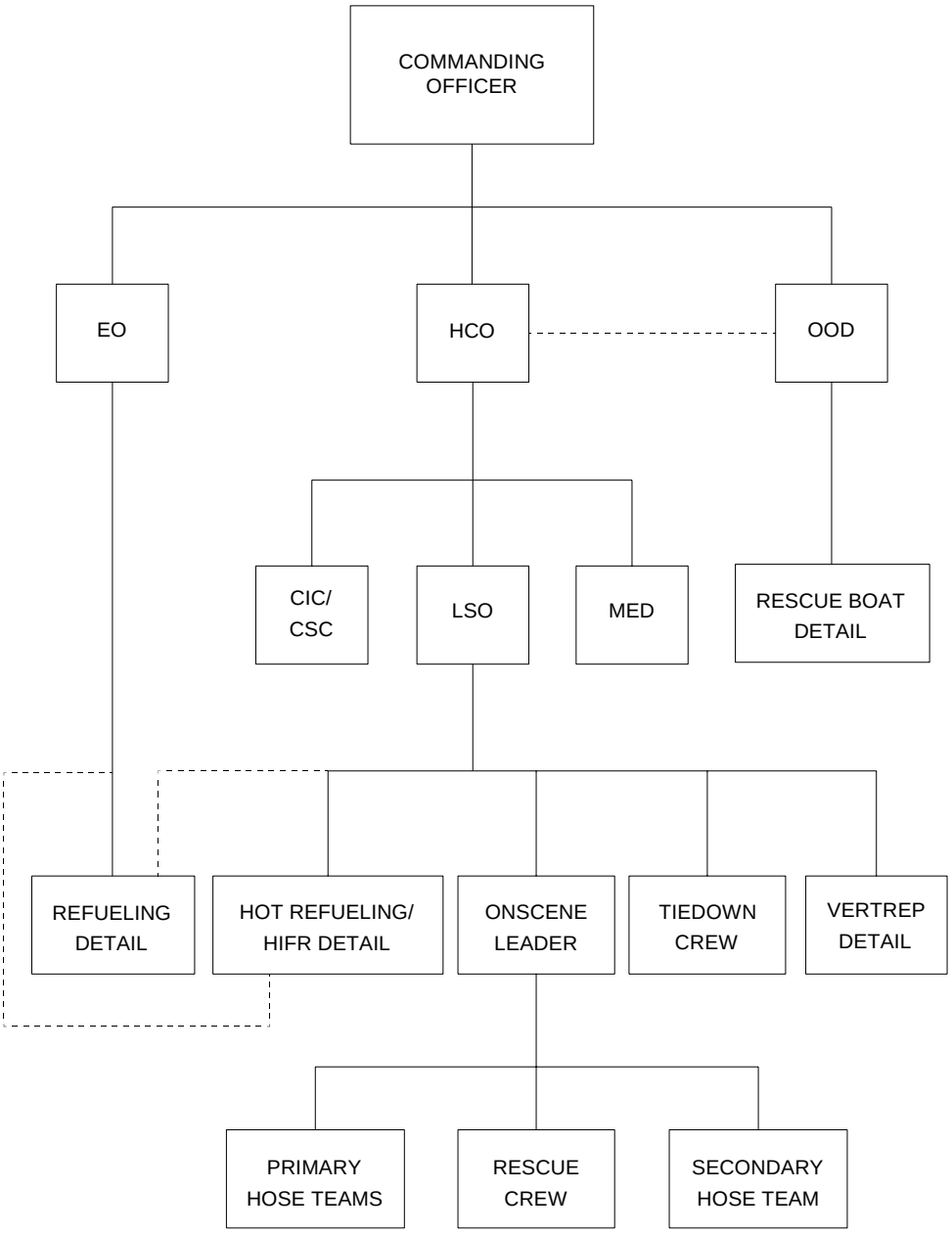

cg9100044a

Figure 2-1. Cutter Flight Quarters Organization

2. Bridge Organization.

   a. During helicopter operations, two distinct tasks require detailed attention and coordination on the bridge:

      (1) The safe navigation of the cutter, and

      (2) The conduct of flight operations.

   b. To accomplish these tasks simultaneously on cutters not equipped with a separate Helo Control Station, the normal underway bridge staff is supplemented by the Helicopter Control Officer (HCO) and if used, HCO phone talker.

3. Combat Information Center (CIC)/Combat Support Center (CSC) Organization.

   a. During helicopter operations, the normal underway watch in the CIC or CSC shall be supplemented with additional personnel any time helicopter control from CIC or CSC is anticipated. These additional personnel report to the HCO/OOD. They normally consist of:

      (1) The Air Direction Controller (ADC), and

      (2) Talkers or plotters required to support the ADC.

   b. The ADC provides flight following at all times and traffic advisories when operating under Level I.

   c. Refer to Chapter 7 for additional information.

4. Flight Deck Organization.

   a. During flight quarters, all flight deck personnel shall be under the supervision of the LSO.

   b. The LSO reports directly to the HCO via a reliable means of communication.

   c. In the interest of safety, only those personnel filling a flight quarters billet specified in the Helicopter Operations Bill are permitted on weather decks exposed to the flight deck during helicopter operations.

NOTE

Additional break-in personnel may be allowed on the flight deck during helicopter operations for training purposes and shall be dressed out in the proper Personal Protective Equipment (PPE) for the position in which they are breaking in.

   d. Fire Party. In the event of a crash on deck the Onscene Leader (OSL) shall assume all responsibility of the flight deck and direct the LSO as needed. The OSL supervises the fire party and reports directly to the HCO. The flight deck fire party shall consist of:

      (1) OSL;

      (2) Two primary hose teams;

(3) A designated secondary hose team;

(4) Rescue crew.

e. Tiedown Crew. The tiedown crew shall consist of a crew of four personnel under the direct supervision of the LSO.

f. Helicopter Refueling Detail. The refueling detail functions under the supervision of the Engineering Officer or designated representative. The detail should only muster for evolutions that require fueling or defueling. The detail shall consist of the following:

(1) One member stationed in the JP-5 pump room.

(2) One member stationed at the fueling station.

(3) One petty officer (usually the fuel king) on the flight deck to fuel the helicopter and take samples from the fuel hose.

(4) One Aqueous Film Forming Foam (AFFF) hose team serving as fire watch.

NOTE

Appropriate communications between the bridge, JP-5 pump room, fueling station, and flight deck shall be maintained.

g. Helicopter Hot Refueling Detail. The helicopter hot refueling detail is under the direct supervision of the LSO. The detail shall consist of the following:

(1) Helicopter fueling detail

(2) Two fuel hose handlers

(3) Fire guard (in a full proximity suit) with a fire extinguisher

(4) The normal flight deck fire party

h. HIFR Detail. The HIFR detail is under the direct supervision of the LSO and shall consist of the following:

(1) Helicopter fueling detail

(2) One tiedown crewmember to ground the helicopter hoist hook

(3) One tiedown crewmember to hookup the HIFR nozzle

(4) Tiedown crewmembers to act as fuel hose handlers

i. VERTREP Detail.

(1) The VERTREP detail on flight deck equipped cutters is under the direct supervision of the LSO and shall consist of:

(a) Two person team (one to hookup the load and one to act as safety/backup)

(b) Grounding wand handler, maybe needed if VERTREP conducted with non-insulated pendant

(c) Additional cargo handling personnel for staging and removing the load

(2) The VERTREP area shall be cleared of all cargo handling personnel during pickup and delivery. Refer to Chapter 10 for additional information including VERTREP to non-flight deck equipped cutters.

j. Rescue Boat Detail.

(1) The rescue boat detail is under the supervision of the Officer of the Deck (OOD) and shall consist of:

(a) Boat lowering detail, and

(b) Rescue boat crew, which shall include an appropriately dressed out cutter swimmer qualified IAW current directives. With the approval of the CO, the swimmer MAY stage with boat crew and not fully dress out if weather and duration of flight operations would cause excessive fatigue.

(2) During flight quarters, the rescue boat crew is not required to remain on station but shall maintain a readiness posture as set forth in the cutter Helicopter Operations Bill. The rescue boat detail is required to muster whenever flight quarters are set. The detail shall muster, brief, and ensure all gear is ready and staged during the first occurrence of each flight quarters period (i.e., morning operations, afternoon operations), make a report to the HCO, and then may return to normal duties at the CO's discretion.

k. Medical Detail. The medical detail shall consist of either a Health Services Technician (HS) or Physician Assistant (PA). The HS or PA are not required to muster during flight operations. The HS or PA shall acknowledge the setting of flight quarters to the HCO and then may return to normal duties. The HS or PA SHALL muster for FLICON FIVE involving vertical insertion operations, a helicopter emergency landing, or upon activation of the crash alarm.

5. Communications Organization.

a. The CO shall determine the mode of communication based on the cutter configuration. The requirement for phone talkers may be eliminated if communications can be established and maintained using other reliable means. The rapid and efficient flow of information is of primary importance during ship-helo operations.

b. Internal communications within different areas of the ship shall be established and reliable. Preferred means of communication consist of one or a combination of the following:

(1) Very High Frequency (VHF) or Ultra High Frequency (UHF) radio.

(2) Sound-powered phone.

(3) 1MC

c. External communications with the aircraft will normally be by radio.

d. Emission Control (EMCON) procedures can be found in Chapter 15.

E. CUTTER BILLET DESCRIPTIONS.

1. Overview. The following paragraphs describe each flight operations billet and provide guidance for the selection of individuals to perform the various duties of the Helicopter Operations Bill. Specific training requirements for each billet are set forth in Chapter 3 and in the Cutter Training and Qualification Manual, COMDTINST M3502.4 (series).

2. OOD.

   a. In addition to normal underway duties, the OOD is responsible for maneuvering the cutter to provide the optimum relative wind and flight deck motion for ship-helo operations.

   b. The OOD shall maintain a steady course and speed during rotor engagement and disengagement (any time that the rotor RPM is less than 100%), helicopter takeoff and landing, when the helicopter is not secured on deck, and during helicopter traversing.

   c. At all other times during ship-helo operations, the OOD shall notify the HCO before course or speed changes.

3. Rescue Boat Coxswain. The rescue boat coxswain supervises the rescue boat crew and reports directly to the OOD. The coxswain shall ensure that the rescue boat is properly outfitted and crewed to include a cutter swimmer.

4. AFFF Station Operator. The AFFF Station Operator is not required to remain on station throughout normal flight operations. The AFFF station shall be energized at the commencement of flight quarters and secured at the end of the evolution. The operator may return to normal duties between evolutions. The AFFF Station Operator shall remain on station in the event a helicopter emergency landing or upon activation of the helicopter crash alarm.

5. HCO.

   a. The HCO exercises overall control of flight operations by ensuring that the cutter, flight deck, and helicopter are ready for each phase of the flight evolution.

   b. The HCO shall keep the OOD informed of the requirements of the flight operations so that the cutter may be maneuvered as required to meet the needs of the helicopter and safe navigation.

   c. HCO shall:

      (1) Ensure radio communications are maintained with the helicopter (or radios monitored as prebriefed for EMCON.

      (2) Ensure communications are maintained with the flight deck.

      (3) Monitor and actively track flight operations via the Flight Deck Video System (FDVS).

      (4) Control the flight deck visual landing aid (VLA) lighting.

   d. On Coast Guard Polar Class Icebreakers (WAGB), the HCO or a designated assistant, also maintains helicopter flight following.

6. HCO Phone Talker. If used, the HCO phone talker shall be familiar with the special terminology associated with helicopter operations.

7. Lookout. When conducting helicopter operations, the lookout assumes the additional responsibility of establishing and maintaining visual contact with the helicopter whenever it is in visual range. The lookout shall have sufficient familiarity with helicopter operations to recognize and report any unusual aircraft actions.

8. ADC. For Level I operations, a qualified and current ADC operator is required. The ADC is responsible for:

   a. Level I: Exercising positive helicopter control (including radar vectors, traffic separation, and radar approach service) (see Chapter 7).

   b. Level II and Level III helicopter operation:

      (1) Providing flight following and traffic advisories.

      (2) Taking the position as the radar operator trained in Air Traffic Control (this may be an officer or petty officer possessing the aptitude and skills necessary to carry out the Level II/III controller functions described in Chapter 7).

9. Flight Deck Personnel.

   a. LSO.

      (1) The LSO is in charge of the flight deck during ship-helo operations and is usually an officer, but may be a senior petty officer, E-6 or above. In the event of a flight deck mishap, the OSL becomes the flight deck supervisor and directs the LSO as needed.

      (2) Only persons who exhibit good judgment, aggressive leadership, and a professional attitude shall be selected for this duty.

      (3) Selected personnel shall meet the requirements for a LSO physical as set forth in the Medical Manual, COMDTINST M6000.1 (series).

WARNING

IF CORRECTIVE LENSES ARE REQUIRED FOR VISION, THEY SHALL BE WORN BENEATH GOGGLES DURING SHIP-HELO OPERATIONS. UNDER NO CIRCUMSTANCES SHALL CORRECTIVE LENSES BE USED INSTEAD OF GOGGLES TO PROVIDE EYE PROTECTION.

   b. NVG Safety Observer (NSO). The NSO shall be an NVG qualified LSO. The NSO shall be stationed where they can observe the LSO and tiedown crew when performing their duties. The NSO shall maintain communication with the HCO. The NSO has the responsibility and authority to stop flight operations when an unsafe condition exists.

   c. Tiedown Crew. The tiedown operation is critical to a safe helicopter landing and requires a coordinated and rapid team effort. Personnel selections shall be made accordingly. The tiedown teams shall not be stationed in the catwalks.

NOTE

The tiedown crew shall not be stationed adjacent to the LSO. They may be designated as the secondary hose team and positioned on the side of the hangar or ship's superstructure off the flight deck. On cutters whose configuration prevents either of these staging points, tiedown personnel shall stage in the hangar. The tiedown crew shall also complete the Flight Deck Hose Man Personnel Qualification Standards (PQS) in COMDTINST M3502.15 (series).

d. Onscene Leader (OSL). The OSL is the direct supervisor of the primary and secondary hose teams and the rescue crew. The OSL shall be well acquainted with helicopter fire fighting procedures and shall possess superior leadership skills. In the event of a flight deck mishap, the OSL becomes the flight deck supervisor.

e. Hose Team Leader and Hose Team.

(1) The hose team leader coordinates movement and employment of the hose, as directed by the OSL. The hose team leader shall occupy the hose handling position immediately behind the nozzle man.

(a) Nozzle Man. The nozzle man operates the nozzle and employs the fire fighting agent.

(b) Plug Man/Hose Handler. Hose team member(s) who assist in the movement of the hose. If more than one hose handler is employed, the last member on the hose also serves as plug man.

(c) AFFF Handler. Responsible for keeping an adequate supply of portable AFFF containers at the hose station. Required only for secondary hose team.

(2) The secondary hose team only responds in the event of a helicopter emergency landing or upon activation of the helicopter crash alarm. The secondary hose team members must be identified by name, properly trained, and not double billeted in that section.

f. Rescue Crew. Personnel selected for flight deck rescue crew duty shall be capable of functioning under adverse conditions. They may be required to extract unconscious personnel from inside the helicopter or perform other duties which require above-average physical strength and endurance. Personnel should be selected accordingly.

g. Engine Start Fire Guard.

(1) The aircraft crewmember should act as the fire guard for engine and auxiliary power unit (APU) starts of aircraft that incorporate an engine fire extinguisher system. Both the Coast Guard H-65 and H-60 incorporate an internal engine fire extinguisher system. A CO2 fire extinguisher with a 3-foot extension pipe shall be positioned on the flight deck as backup.

(2) For engine start of aircraft without an internal fire suppression system, a member of the fire party (not the OSL) shall be stationed with a CO2 fire extinguisher with a 3-foot extension pipe at the side of the helicopter engine being started. The fire guard shall be in position to discharge the extinguisher under the direction of the helicopter aircrew.

(3) When operating with non-CG helicopters, the ship shall determine the engine fire suppression capabilities of the helicopter in question before starting the engines and employ the appropriate procedures.

F. CUTTER FLIGHT QUARTERS STAFFING. The minimum number of qualified personnel needed to satisfy flight quarters staffing requirements on all flight deck equipped Coast Guard cutters is specified in Table 2-1. Individuals selected to perform the duties of the various billets shall be chosen on the basis of their ability to best perform the assigned tasks, rather than by rank, rate, or seniority.

Table 2-1. CUTTER MINIMUM STAFFING REQUIREMENTS

Billet	Personnel Required
HCO	1
ADC	1
LSO	1
Tiedown Crew (Note (b))	4
Onscene Leader (OSL)	1
Primary Hose Teams (Note (c))	6
Secondary Hose Team (Note (d))	4
Rescue Crew	2
Rescue Boat Detail (Note (e))	Note (f)
Medical Detail (Note (g))	1
AFFF Station Operator	1
Refueling Detail (Note (h))	3
VERTREP Detail	2 Note (i)
NSO	1 Note (j) (k)

Notes:

(a) Personnel shall not be “double billeted” in the same section (port or starboard) for any evolution.

(b) May be designated as the secondary hose team.

(c) Two hose teams composed of three members each.

(d) May designate the tiedown crew as the secondary hose team.

(e) The rescue boat detail is required to muster on each setting of flight quarters. They shall muster, brief, and ensure all gear is ready and staged during each flight quarters, make a report to the HCO, and then may return to normal duties at the CO’s discretion.

(f) Includes one cutter swimmer qualified per the Cutter Surface Swimmer Program, COMDTINST M16134.2 (series). Not required to be on station, but shall be able to respond immediately upon sounding of the helicopter crash alarm.

(g) The HS or PA shall muster during FLICON FIVE involving vertical insertion operations.

(h) Only muster during evolutions when fueling or defueling is expected or at the CO’s discretion.

(i) May require an additional member to ground the helicopter cargo hook when using an electrically conductive pendant. Refer to the Multiservice Helicopter External Air Transport: Basic Operations and Equipment, COMDTINST M13482.2 (series).

(j) NSO only required when conducting NVG operations.

(k) The NSO is not required aboard LEGEND Class cutters and CGC HEALY since HCO has unobstructed view of the flight deck.

G. AVIATION DETACHMENT ORGANIZATION.

1. Status as Department within Cutter's Organization. The Organization and Regulations Manual of each flight deck equipped cutter shall include provisions for establishing an Aviation Department during a deployment. This organization may be partially implemented as required for each embarkation.

2. Senior Aviator. Unless another officer is designated in writing by the ordering authority, the ranking aviator holding an Aircraft Commander designation in the type of aircraft being flown shall be the AVDET Senior Aviator.

H. AVIATION DETACHMENT BILLET DESCRIPTIONS.

1. Senior Aviator.

   a. The AVDET Senior Aviator reports to the CO concerning conduct of flight operations and the Executive Officer for all administrative matters.

   b. In addition to supervising the AVDET, the senior aviator shall perform the following duties as the Aviation Department Head:

      (1) Act as advisor to the cutter CO on all aviation matters, including flight safety.

      (2) Provide flights within the ability and limits of available resources in support of the mission of the cutter.

      (3) Provide training flights as practicable to maintain the proficiency of pilots, aircrews, and flight deck crews to meet the requirements of the Coast Guard Air Operations Manual, COMDTINST M3710.1 (series).

      (4) Determine crew requirements for each mission.

      (5) Conduct drills, lectures, and training as practicable for cutter personnel in all phases of ship-helo operations.

      (6) Ensure adequate security of the aircraft.

      (7) Ensure that required maintenance and corrosion control is performed, within the limitations of available resources.

      (8) Prepare all required records and reports.

      (9) Inspect cutter helicopter operations facilities, equipment, bills, logs, and records.

      (10) Complete predeployment checklist requirements perAppendix H.

2. AVDET Members. Other AVDET personnel shall function under the direct supervision of the Senior Aviator.

I. AVIATION DETACHMENT PERSONNEL ASSIGNMENTS.

1. An AVDET shall have a minimum of two pilots (at least one aircraft commander) and one aircrew member. Additional personnel may be assigned as deemed necessary by the parent aviation unit.

2. AVDETs are normally sized only to the level necessary to perform the mission and to maintain the related equipment. Therefore, AVDET personnel should not be assigned additional or collateral duties while deployed that conflict with their performing aviation duties.

3. The Senior Aviator, within the framework of the ship's liberty policy, shall control liberty for AVDET personnel.

J. AVIATION DETACHMENT BERTHING. Cutter berthing assignments for AVDETs should be as follows:

1. Officers. Officers should be assigned staterooms commensurate with their rank.

2. Chief Petty Officers (CPO). CPOs should be berthed in CPO quarters.

3. Other Crew. AVDET crewmembers in pay grades E-6 and below should be berthed together where possible for crew rest concerns.

K. AIRCRAFT CREW REQUIREMENTS.

1. Aircraft crew size shall be based on several considerations:

   a. Present and forecast weather conditions

   b. Available navigation systems

   c. Pilot experience

   d. Mission requirements

   e. Distance operating from the cutter

2. In the absence of compelling operational requirements, it is better to assign two pilots for H-65 operations. The minimum aircrew manning requirements for helicopters conducting shipboard operations are depicted in Table 2-2.

Table 2-2. AIRCRAFT MINIMUM CREW REQUIREMENTS

Aircraft	Condition	Pilots	Aircrew members (a)
H-60	Day	2 Note (b)	1
	Night or IMC Note (c)	2 Note (d)	1
H-65	Day VMC	1 Note (e)	1
	Night or IMC Note (c)	2 Note (d)	1

Notes:

(a) Shall be appropriately qualified for the mission.

(b) Shall include a shipboard qualified and current Aircraft Commander or First Pilot.

(c) For the purpose of determining pilot requirements, IMC is defined as ceiling below 500 feet, or visibility less than 3 miles.

(d) Shall include a shipboard qualified and current Aircraft Commander.

(e) Aircraft Commander or First Pilot; shipboard qualified and current.

CHAPTER 3. CERTIFICATION, QUALIFICATION, AND STANDARDIZATION.

A. INTRODUCTION. Before conducting ship-helo operations, the cutter's flight operations facilities shall be certified, and the flight quarters and aircrew personnel qualified and proficient in the procedures defined in this Manual.

B. IN THIS CHAPTER. This chapter discusses the following topics:

1. Cutter Certification.
2. Cutter Qualification.
3. Cutter Personnel Qualification and Training.
4. Pilot Qualification and Training.
5. Aircrew Qualification and Training.
6. Air Station Standardization Training.

C. CUTTER CERTIFICATION.

1. Overview.

   a. Aviation facility certification is required for all Coast Guard flight deck equipped cutters. Certification verifies that the facilities and equipment necessary for safe and efficient helicopter operations are installed, available, and operate according to approved plans and procedures.

   b. Certification is categorized by levels, classes, and types of aircraft to be operated. The desired levels and classes of certification are shown in Table 3-1.

   c. Certification standards for air capable cutters are published in the Naval Air Warfare Center, Aircraft Division (NAWCAD) Lakehurst Air Capable Ship Aviation Facilities Bulletin No. 1 (series).

NOTE

The certification requirements listed in Table 3-1 are the goals for each cutter class. At times, actual ship certification level/class may be less than those published in Table 3-1.

Table 3-1. DESIRED LEVELS AND CLASSES OF CUTTER CERTIFICATION

WAGB 420 Cutter: Level II	
Class 1	USCG H-65
Class 2A	USN/USMC H-1, H-2, H-3, H-60B/F/H
	USCG H-60
	USA H-1, H-6, H-58
	USAF H-1, H-3
Class 4, Type 2	USN/USMC H-1, H-2, H-3, H-46, H-60A/B/F/H
	USCG H-60, H-65
	USA H-1, H-47, H-60A/K
	USAF H-1, H-3E, H-60G
WMSL 418 Cutters: Level I	
Class 1	USCG H-65
Class 2	USCG H-60 (all variants)
	USN/USMC H-60 (all variants), H-3, H-46
	USA H-60 (all variants), H-1, H-6, H-58
	USAF H-60 (all variants), H-1
	DHS H-60 (all variants)
Class 4	USCG H-60 (all variants), H-65
	USN/USMC H-60 (all variants), H-3, H-46
	USA H-60 (all variants), H-1, H-47
	USAF H-60 (all variants), H-1
	DHS H-60 (all variants)
Class 6	USCG H-60 (all variants), H-65
	USN/USMC H-60 (all variants), H-3, H-46

Table 3-1. DESIRED LEVELS AND CLASSES OF CUTTER CERTIFICATION Continued

WAGB 399 Cutters: Level II	
Class 1	USCG H-65
Class 2A	USN/USMC H-1, H-2, H-3, H-60B/F/H
	USCG H-60
	USA H-1, H-6, H-58
	USAF H-1, H-3
Class 4, Type 2	USN/USMC H-1, H-2, H-3, H-46, H-60A/B/F/H
	USCG H-60, H-65
	USA H-1, H-47, H-60A/K
	USAF H-1, H-3E, H-60G
WHEC 378 Cutters: Level I Hangar Retracted	
Class 1	USN H-2
	USCG H-65
Class 2	USN/USMC H-1
Class 2A	USA H-1, H-6, H-58
	USAF H-1
Class 4, Type 2	USN/USMC H-1, H-2, H-3, H-46, H-60A/B/F/H
	USCG H-60, H-65
	USA H-1, H-47, H-60A/K
	USAF H-1, H-3, H-60G
Hangar Extended or Retracted	
Class 5, Type 2	USN/USMC H-1, H-2, H-3, H-46, H-53, H-53E, H-60A/B/F/H
	USCG H-60, H-65
	USA H-1, H-47, H-54, H-60A/K
	USAF H-1, H-3, H-53, H-60G
Class 6R	USN/USMC H-2, H-3, H-46, H-53, H-53E, H-60B/F/H
	USCG H-60, H-65

Table 3-1. DESIRED LEVELS AND CLASSES OF CUTTER CERTIFICATION Continued

WMEC 282 Cutter Level II	
Class 1	USCG H-65, H-60
Class 4, Type 2	USCG H-65, H-60
Class 5, Type 2	USCG H-65, H-60
Class 6R	USCG H-65, H-60
WMEC 270 Cutters: Level I Hangar Retracted	
Class 1	USN H-2, USCG H-65
Class 2	USN/USMC H-1
Class 2A	USN H-60B/F/H (B Class 270s Only)
	USCG H-60 (B Class 270s Only)
	USA H-1, H-6, H-58
	USAF H-1
Class 4, Type 2	USN/USMC H-1, H-2, H-3, H-46, H-60A/B/F/H
	USCG H-60, H-65
	USA H-1, H-47, H-60A/K
	USAF H-1, H-3, H-60G
Class 6R	USN/USMC H-2, H-3, H-46, H-53, H-53E, H-60B/F/H
	USCG H-60, H-65
WMEC 210 Cutters: Level II	
Class 2	USCG H-65
Class 4, Type 2	USN/USMC H-1, H-2, H-46, H-60A/B/F/H
	USCG H-60, H-65
	USA H-1, H-60A/K
	USAF H-1, H-60G
WMEC 210 Cutters: Level III	
Class 6R	USN/USMC H-2, H-3, H-46, H-53, H-53E, H-60B/F/H
	USCG H-60, H-65
Notes: Levels and classes are defined as follows:	
Level I: Day and night, IMC operations	
Level II: Day and night, VMC operations	
Level III: Day only, VMC operations	

Table 3-1. DESIRED LEVELS AND CLASSES OF CUTTER CERTIFICATION Continued

Class 1: Landing area with service and maintenance facilities
Class 2: Landing area with service facilities
Class 2A: Landing area with limited service facilities
Class 3: Landing area without support facilities
Class 4: VERTREP area, hover height in excess of 5 feet, Type 2 installations provide pickup and delivery zones exceeding the minimum requirements
Class 5: VERTREP area, hover height in excess of 15 feet
Class 6: HIFR capable, provides a minimum fuel flow of 50 gallons per minute to a helicopter hovering at 40 feet above the water
Class 6R: HIFR capable, provide a minimum fuel flow of 25 gallons per minute to a helicopter hovering 40 feet above the water, but insufficient flow rate for Class 6
NVG certified (compliance with Air-Capable Ships (ACS)) Visual Landing Aids (VLA) Service Change No. 32, Revision B.

2. Certification Training.

   a. Certification is valid for 36 months, but shall be suspended or withdrawn whenever the cutter becomes unable to comply with the specified standards.

   b. Newly constructed cutters shall be certified while in “In Commission, Special” status. Cutters that undergo major structural modifications affecting flight operations facilities shall require recertification.

   c. Area Commanders shall coordinate initial and recertification inspection visits with the appropriate certification authority for the cutter’s class to ensure that certification does not lapse.

3. Certification Authority.

   a. Naval Air Systems Command (NAVAIR) Inspection Authority. Aviation facility certification for WAGB 420, WMSL 418, WHEC 378, WMEC 282, WMEC 270, and WMEC 210 cutters are granted by Naval Air Warfare Center, Aircraft Division Lakehurst (NAVAIRWARCENACDIVLKE). Certifications issued are applicable for operations with Coast Guard, as well as Navy, Marine Corps, and other DoD helicopters.

   b. NAVAIR Aviation Facility Inspectors. Certification inspections are conducted by Navy Aviation Ship Installation Representatives (ASIR) and are scheduled through NAVAIRWARCENACDIVLKE by the cutter’s Area Commander.

   c. NAVAIR Aviation Facility Inspection Preparation. In preparation for Navy certification, technical assistance visits should be requested from NAVAIRWARCENACDIVLKE via the Area Commander. Flight operations facilities information and current certification levels for cutters

certified by NAVAIRWARCENACDIVLKE are listed in Shipboard Aviation Facilities Resume, NAVAIRWARCENACDIVLKE-ENG-7576 (series).

d. NVG Aviation Facility Certification. NVG Certification of Coast Guard cutters is issued by Naval Air Systems Command (NAVAIR).

(1) Cutter lighting and light discipline are critical to NVG performance and the safe conduct of NVG flight operations. Lighting configurations and intensities will vary with ambient conditions and aircrew and flight deck personnel proficiency and preference. In addition to NVG certification, each cutter shall have the following items aboard and in serviceable condition before commencing NVG operations:

(a) A low light FDVS.

(b) Three sets of NVGs (ANVIS9 or better).

(c) Three aviator style helmets (radio capable) for mounting ANVIS style NVGs.

(d) Shatterproof clear eye protection for the LSO and NSO.

(e) Chemlights or other NVG compatible lights (blue or green) to mark all personnel on the flight deck.

(f) Portable radios for use by the LSO, NSO, and other stations. Each station shall maintain appropriate circuit discipline.

e. Commanding Officer, ATC Mobile.

(1) Aviation facility certifications for WAGB 399 cutters are granted by ATC Mobile. The certification remains in effect until the last day of the 24th month in which the inspection was completed.

(2) ATC Mobile Ship-Helo Instructors shall review the condition of all cutter aviation facilities as part of a recurrent standardization training visit.

(3) ATC Mobile Ship-Helo Instructors shall issue a suspension of a cutter's aviation facilities certification, subject to review by CG-711, if the cutter's aviation facilities do not comply with applicable standards. The suspension remains in force until the reported problem is corrected or the certification expires.

(a) Certifications issued by the CO, ATC Mobile, are applicable for operations with Coast Guard aircraft only.

(b) Certification inspections are conducted by instructors from the Ship-Helo Branch, ATC Mobile, and are scheduled through ATC Mobile by the cutter's Area Commander.

(c) In preparation for this certification, technical assistance visits may be requested from ATC Mobile via the Area Commander.

4. Casualties Affecting Certification. Casualties affecting a cutter's certification shall be reported via message to the cognizant certification authority, Commandant (CG-711, CG-751), the Area Commander, and ATC Mobile Ship-Helo Branch. The cutter shall also downgrade their certification status

to the appropriate level and class. When the casualty is corrected, the cutter shall upgrade their certification status by notifying the cognizant certification authority via message, info Commandant (CG-711, CG-751), Area Commander, and ATC Mobile Ship-Helo Branch.

D. CUTTER QUALIFICATION.

1. Overview. All flight deck-equipped cutters shall complete the qualification requirements of this Manual. Qualification ensures that the cutter meets the minimum staffing requirements and that the individuals filling flight quarters billets are properly trained in standardized procedures. Cutter qualification level may not always match the cutter's certification level (i.e, cutter is certified for level I but qualified for level 2).

NOTE

Currency shall not be mistaken for proficiency. Both cutters and air stations shall proactively seek opportunities to maintain proficiency in ship-helo operations.

2. Qualification Authority. CO, ATC Mobile, shall qualify all flight deck-equipped cutters for ship-helo operations.

3. Initial Qualification. Initial qualification training is conducted by the ATC Mobile Ship-Helo Branch following a cutter's initial certification. The requirements for initial qualification are listed in Appendix A.

4. Maintaining Qualifications.

   a. A cutter remains qualified as long as the minimum required number of qualified flight quarters personnel specified in Chapter 2, Table 2-1 are on the cutter. The qualification remains in effect until the last day of the 24th month in which the inspection was completed.

   b. When cutters are being manned by multiple crews, qualifications shall follow the crew. Area Commanders shall be responsible for tracking multicrew qualifications.

   c. The Area Commander shall be advised if it is anticipated that the minimum staffing requirements cannot be met due to the temporary absence of qualified personnel or other reasons.

   d. A cutter's qualification lapses whenever these requirements are not achieved and may be suspended or withdrawn for cause. If a cutter's qualification lapses through failure to meet recurrent training requirements or transfer of qualified personnel, qualification may be regained by satisfying requalification requirements or by assignment of qualified personnel from another cutter of the same class.

   e. Area Commanders shall ensure cutters are provided sufficient opportunity to conduct flight operations to maintain qualification.

5. Standardization Inspections.

   a. Standardization inspections are conducted to:

      (1) Review and practice standard ship-helo procedures.

(2) Introduce new procedures.

(3) Assist cutters in maintaining a high standard of proficiency.

b. Standardization inspections conducted by the ATC Mobile Ship-Helo Branch are required for all flight deck-equipped cutters every 24 months, and are normally conducted between 18 and 24 months.

c. Area Commanders shall coordinate the scheduling of standardization inspections to meet this requirement.

d. Requests for additional training or assistance visits may be made when required. The cutter's Area Commander shall provide funding for these additional visits.

6. Cross Qualification. Upon qualification with one model of helicopter, cutters are considered qualified to conduct operations with all models of helicopters.

NOTE

Before conducting operations with an unfamiliar model of helicopter, a cutter shall complete the orientation requirements outlined in Appendix A.

E. CUTTER PERSONNEL QUALIFICATION AND TRAINING.

1. Overview.

a. COs shall ensure that flight quarter's personnel are properly qualified and proficient in helicopter operations.

b. Personnel are qualified to perform in specific flight quarter's billets when they have completed the training requirements set forth below. An individual remains qualified in billet as long as the recurrent requirements are met semiannually. The recurrent periods are 1 January through 30 June and 1 July through 31 December each year.

c. Personnel whose qualifications have lapsed shall complete the requalification requirements.

2. Qualification Requirements.

a. Table 3-2 through Table 3-6 specifies minimum training required to initially qualify, maintain currency, and requalify cutter flight quarters personnel. Although not mandatory for qualification, courses for LSOs with an established NVG syllabus are available at U.S. Navy Fleet Training Schools. Attendance is recommended.

NOTE

During initial qualification, a Ship-Helo Instructor or Aviation Training Team (ATT) member may credit up to four tiedown operations by break-in personnel toward day qualification with the helicopter shut down. The remaining operations shall be accomplished with actual landings or an aircraft operating at 100% rotor speed secured on deck. If operating above general limits, TALON or the Aircraft Ship Integrated Secure and Traverse (ASIST) system shall be used to secure the H-65 during these training evolutions.

b. Record Keeping. Upon initial qualification of an individual in any flight quarter's billet, an appropriate service record and training record entry shall be made.

c. Maintaining Currency. A qualification lapses when the recurrent requirements have not been satisfied during the preceding semiannual calendar period. Recurrent requirements exist only for NVG-Landing Signal Officers (NVG-LSO), LSOs, Air Direction Controllers (ADC), and tiedown personnel.

d. Training. Training of NVG-LSOs, NSOs, and tiedown crewmembers may be conducted by a ship crew member qualified in the same billet. In the absence of qualified NVG-LSO personnel at the unit, training may be accomplished by qualified NVG-LSO personnel from another cutter of the same class or by a Ship-Helo Instructor.

3. Personnel Qualification Standards (PQS). Personnel Qualification Standard (PQS) - Shipboard Helicopter Operations, COMDTINST M3502.15 (series), contains watch station qualification requirements for cutter crewmembers assigned to duties in support of flight operations. PQS completion is mandatory before granting initial qualifications.

4. Cross Qualification. Upon qualification with one model of helicopter, personnel are considered qualified to conduct operations with all models of helicopters. Before conducting operations with any model of helicopter with which they are unfamiliar, personnel shall complete the orientation requirements outlined in Appendix A.

F. PILOT QUALIFICATION AND TRAINING.

1. Initial and Recurrent Training.

a. Table 3-6 lists minimum requirements for qualification to operate a Coast Guard helicopter on a ship. Initial day and night qualification for Coast Guard pilots shall be conducted in Coast Guard helicopters on Coast Guard cutters under the supervision of a shipboard qualified unit instructor pilot (IP). Initial qualification for NVG shipboard operations may be conducted on an NVG certified Coast Guard cutter or U.S. Navy ship, under the supervision of an NVG shipboard qualified and current unit IP.

b. Training in landings and takeoffs should be conducted under various pitch, roll, and wind conditions until a high level of proficiency is attained. The Coast Guard standard qualification syllabus developed for the type of helicopter flown shall be used.

c. After initial qualification landings on any military ship certified for helicopter operations may be credited towards currency requirements.

d. Qualifications shall lapse if the recurrent training requirements are not met during the preceding semiannual calendar period.

e. A shipboard qualified aircraft commander can be used for all shipboard pilot training other than initial qualification.

NOTE

Initial H-60 deck landing qualifications may be conducted aboard U.S. Navy vessels under the supervision of a shipboard qualified unit Instructor Pilot. This qualification shall be annotated as "USN ONLY". Prior to acting as the AC for ship-helo operations involving a Coast Guard Cutter, a "USN ONLY" shipboard qualified pilot shall complete the requalification minimums on a Coast Guard Cutter with a "Coast Guard" shipboard qualified Aircraft Commander or Instructor Pilot.

2. Cross Qualification. A pilot previously shipboard qualified in one model of helicopter shall complete the requalification requirements specified in Table 3-6 to become qualified in another model helicopter. Pilots previously shipboard qualified in other military branches shall complete the initial qualification requirements specified in Table 3-6.

3. NVG Operations. Pilots shall complete the NVG Shipboard Landing Syllabus with a qualified shipboard NVG IP before commencing NVG flight operations. The specific initial qualification and currency requirements are described in Table 3-6.

4. Special Missions. An aircraft commander shall be assigned as PIC of aircraft on difficult or unusual missions, or on flights carrying non-mission-essential personnel.

G. AIRCREW QUALIFICATION AND TRAINING. Although no specific qualification requirements exist for helicopter crewmembers, familiarization training in shipboard operations is strongly encouraged. This should include:

1. Static refueling.
2. Hot refueling.
3. HIFR.
4. Secondary and heavy weather tiedowns.
5. Blade folding and unfolding.
6. Helicopter traversing and hangaring.
7. NVG Shipboard Operations.

Table 3-2. LSO AND NVG-LSO QUALIFICATION REQUIREMENTS

Qualification Requirement			
Evolution	**Initial (Note 2)**	**Recurrent (Note 3)**	**Requalification (Note 4)**
Day Landing	15	5	8
Night Landing	8	2	4
NVG Landing	8	4	6

Notes:

1. Medical Requirement

   (a) LSO trainees shall have an approved LSO physical before commencing training IAW Medical Manual, COMDTINST M6000.1 (series). The LSO physical is effective for 24 months.

2. Initial Requirements

   (a) LSO watch station qualification requirements contained in Personal Qualification Standard (PQS) - Shipboard Helicopter Operations, COMDTINST M3502.15 (series), shall be completed before initial designation.

   (b) NVG PQS shall be completed prior to commencing NVG flight operations training.

   (c) Day landings shall be completed before night landing, and night landings before NVG landings.

   (d) Before beginning NVG-LSO syllabus, the LSO shall be qualified and current in day and night operations.

   (e) Primary tiedowns shall be used on a minimum of 4 day, 4 night, and four NVG landings.

3. Recurrency Requirements

   (a) Primary tiedowns shall be used on a minimum of four evolutions (2 day and 2 night/NVG). Tiedown evolutions are counted IAW note in Table 3-3.

   (b) Recurrency requirements may be completed on another cutter of the same class.

   (c) LSO instructor MAY count up to five instructional landings toward their own semiannual requirements.

4. Requalification

   (a) Day landings shall be completed before night landing, and night landings before NVG landings.

   (b) Both night and NVG requalification requirements must be completed to regain night/NVG currency.

   (c) Requalification requirements may be completed on another cutter of the same class.

   (d) Primary tiedowns shall be used on a minimum of 2 day, 2 night, and 2 NVG landings.

Table 3-3. TIEDOWN CREW QUALIFICATION REQUIREMENTS

Qualification Requirement			
Evolution	**Initial**	**Recurrent**	**Requalification**
Day Landing	10	4	8
Night Landing	6		
Note: Tiedown crewmember watch station qualification requirements contained in PQS - Shipboard Helicopter Operations, COMDTINST M3502.15 (series), shall be completed before initial designation. During initial qualification, a Ship-Helo Instructor or ATT member may credit up to four tiedown operations by break-in personnel toward day qualification with the helicopter shut down. The remaining operations shall be accomplished with actual landings or an aircraft operating at 100% rotor speed secured on deck. If operating above general limits, TALON or the ASIST system shall be used to secure the H-65 during these training evolutions. Tiedown personnel are credited with one evolution each time they enter the rotor arc. Therefore, installing, then removing a tietown is considered two evolutions.			

Table 3-4. FLIGHT DECK FIRE PARTY AND HELICOPTER REFUELING PERSONNEL QUALIFICATION REQUIREMENTS

Billet	Qualification Requirement
Onscene Leader (OSL)	OSL watchstation qualification requirements contained in COMDTINST M3502.15 (series) shall be completed before initial designation.
Primary Hose Teams, Secondary Hose Team, Rescue Crew	Hose Team and Rescue Crew qualification requirements contained in COMDTINST M3502.15 (series) shall be completed before initial designation.
Helicopter Refueling Personnel	Aviation Fuel Handler qualification requirements contained in COMDTINST M3502.15 (series) shall be completed before initial designation.

Table 3-5. HCO, ADC, RESCUE BOAT CREW, AND CUTTER SWIMMER QUALIFICATION REQUIREMENTS

Billet	Qualification Requirement
HCO	HCO watch station qualification requirements contained in COMDTINST M3502.15 (series) shall be completed prior to initial designation.
ADC	ADC watch station qualification requirements contained in COMDTINST M3502.15 (series) shall be completed before initial designation. USN ADC course is required for initial designation for Level I operations. Level I only applies to cutters certified for positive control operations.
	Controllers shall maintain a current record of accomplished air control using an ADC logbook. Visual Flight Rules (VFR) flight following time does not satisfy currency requirements.
	To maintain qualification, complete 10 hours of actual or simulated aircraft positive control per semiannual period. At least 2 hours shall be with an actual aircraft.
	To renew a lapsed qualification, complete 10 hours of actual or simulated aircraft positive control under the supervision of a qualified controller. At least 2 hours shall be with an actual aircraft.
Rescue Boat Crew	Be qualified per the Cutter Training and Qualification Manual, COMDTINST M3502.4 (series).
Cutter Swimmer	Be qualified per the Cutter Swimmer Program Manual, COMDTINST M16134.2 (series).

Table 3-6. PILOT TRAINING REQUIREMENTS

Shipboard Landing Qualification Earned						
Evolution	**Initial** (Note 1, 3)		**Recurrent** (Note 2)		**Requalification** (Note 3)	
	Day Only	Day, Night, and NVG	Day Only	Day, Night, and NVG	Day Only	Day, Night, and NVG
Day Landing	15	15	5	5	8	8
Night Landing		8				4
Shipboard NVG Landing		8				6
Night/NVG Landing				6 (Note 2)		
Helo Start Sequence	1					
Helo Shutdown	1					
Shipboard Refueling	1					

Notes:

1. The number of landings listed is considered the minimum required. Additional landings may be necessary in order to achieve the proficiency required for qualification. Pilots shall be day and night shipboard current and qualified before beginning the NVG Shipboard Syllabus.
2. Recurrent requirements may be completed at any time during each semiannual calendar period. Night and NVG landings may be counted toward day landings for currency requirements only. Pilots shall also review NVG emergency procedures every calendar year with an NVG IP (within 15 months of the previous review). NVG recurrency can be conducted on any NVG certified cutter or ship. To satisfy night/NVG recurrency requirements, a pilot must complete a total of six landings at night, at least four of which shall be NVG landings.
3. For initial and requalification, day landings shall be completed before night landings and night landings before NVG landings. Pilots are required to complete the NVG initial qualification syllabus with a unit IP. If currency lapses, a pilot may complete a requalification flight with a qualified and current Aircraft Commander or IP. Both night and NVG requalification requirements must be completed to regain night/NVG currency.

Non-Coast Guard aircrews shall train IAW pertinent parent service directives and shall ensure that all prerequisite training requirements to operate with Coast Guard cutters have been met before engaging in shipboard NVG operations.

H. <u>AIR STATION STANDARDIZATION VISITS</u>. ATC Mobile shall provide Rotary Wing Air Stations classroom training in shipboard helicopter operational procedures every 24 months. Air Station COs shall ensure maximum participation by pilots and aircrew during these training visits.

CHAPTER 4. EQUIPMENT AND MATERIALS.

A. INTRODUCTION. This chapter covers the equipment and materials required for all Coast Guard flight deck-equipped cutters.

B. IN THIS CHAPTER. This chapter discusses the following topics:

1. Equipment.
2. Personal Protective Clothing and Equipment.
3. Flight Deck Operating Criteria and Visual Landing Aids.

C. EQUIPMENT.

1. Overview.

   a. Specific equipment and material requirements for all Coast Guard flight deck-equipped cutters are contained in Naval Air Warfare Center, Aircraft Division Lakehurst (NAVAIRWARCENACDIVLKE) Air Capable Ship Aviation Facilities Bulletin No. 1 (series) and the Coast Guard Shipboard Aviation Allowance Equipage List (AEL).

   b. Additional requirements are listed throughout this Manual. All equipment and material shall be available and working properly for a cutter to be certified.

   c. Equipment and material discrepancies affecting certification shall be reported immediately to the cutter's Operational Commander, Commandant (CG-711 and CG-751), ATC Mobile (Ship-Helo Branch), and NAVAIRWARCENACDIVLKE.

   d. Operations in the affected certification categories shall be suspended until the discrepancies are resolved.

2. Aircraft. Minimum equipment and material standards for Coast Guard helicopters conducting shipboard operations are contained in the appropriate flight handbook and maintenance publications.

D. PERSONAL PROTECTIVE EQUIPMENT (PPE) AND CLOTHING.

1. Overview.

   a. All personnel on or near the flight deck during flight operations shall wear protective clothing and equipment color coded to allow identification by function. Table 4-1 indicates billet color codes. Personnel assigned to both a primary and secondary flight deck billet shall wear the color of their primary billet. All break-in personnel shall wear the color of the primary billet for which they are training.

   b. The AEL lists National Stock Numbers (NSN) for all flight deck protective clothing and equipment.

Table 4-1. FLIGHT DECK COLOR CODES

Billet	Helmet	Jersey	Life Preserver
ATT	Note *	Note *	Note *
LSO	Yellow	Yellow	Yellow
NSO	Yellow	Yellow	Yellow
Tiedown Crew	Blue	Blue	Blue
Fire Party	Red	Red	Red
Back-Up Fire Party	Red	Red	Red
Rescue Crew (Proximity Suit and Hood)	Note **	Red	Red
Fuel Detail	Purple	Purple	Purple
Medical Detail	White	White	White
Ship-Helo Instructor	Green	Green	Green

Notes:

* The ATT shall wear a green jersey. The cranial assembly and vest should be the color of the primary position in which they are conducting training.

** Helmets are not required to be worn under proximity suit hoods.

2. Cranial Helmet. Cranial helmets shall be worn by all flight deck personnel and helicopter passengers. Two types of cranials are authorized, the HGU-25P and the K-10. The HGU-25P is a two-piece cranial consisting of a front and back plastic outer shell, covering a cloth liner and aural protectors. The K-10 is a one piece cranial with a single external plastic shell, aural protectors, and integrated communication system with microphone and jack plug. The K-10 is designed for use with a handheld radio and is normally used for all operations by the LSO and NSO.

   a. Assembly. Remove the retaining C-clips from all aural protectors and communications headsets and discard them. Assemble the aural protector to the fabric liner as follows:

      (1) Disconnect the ear cups.

         (a) Insert the ear cups through the ear holes in the liner.

         (b) Reconnect the ear cups.

         (c) Snap the headset into place on the top of the liner.

      (2) Install a 2- by 2-inch piece of Velcro®-style pile tape (for distress light attachment) along the left side of the front cranial assembly.

      (3) Attach the front and back pads to the front and back outer shells.

(4) Snap the shell assemblies onto the liner, making sure that the square notch on each shell is at the top of the helmet (creating an opening for the aural protector) (Figure 4-1 through Figure 4-3).

(5) Apply the reflective tape to the helmet. Center it on each shell as follows:

The outer shells are marked with white reflective tape: 6 inches wide by 6 inches high on the back shell and 6 inches wide by 3 inches high on the front shell.

(6) Additionally, the LSO, and Ship-Helo Instructor cranials are marked with leadership stripes as follows:

(a) Three 1- by 6-in long vertical red or international orange reflective tape stripes on the back shell and three 1-inch wide by 3-inches long vertical red or international orange reflective tape stripes on the front shell.

(b) The stripes are evenly spaced and placed over the white reflective tape. Start at the outside edges of the white reflective tape and create two vertical white stripes between them.

(c) On the one-piece K-10 cranial, all indented surfaces shall have white reflective tape with three 1-inch red stripes spaced evenly across the back of the helmet.

b. Maintenance. Maintenance for the cranial helmet is as follows:

(1) Replace ear cup seals annually or as they become hard.

(2) Disassemble helmets and wash fabric liners as they become soiled.

(3) Replace fabric liners as they become worn.

(4) Check condition of reflective tape and replace as necessary.

c. Assembly, maintenance, and operation of the K-10 shall be IAW the manufacturer’s publications and directives.

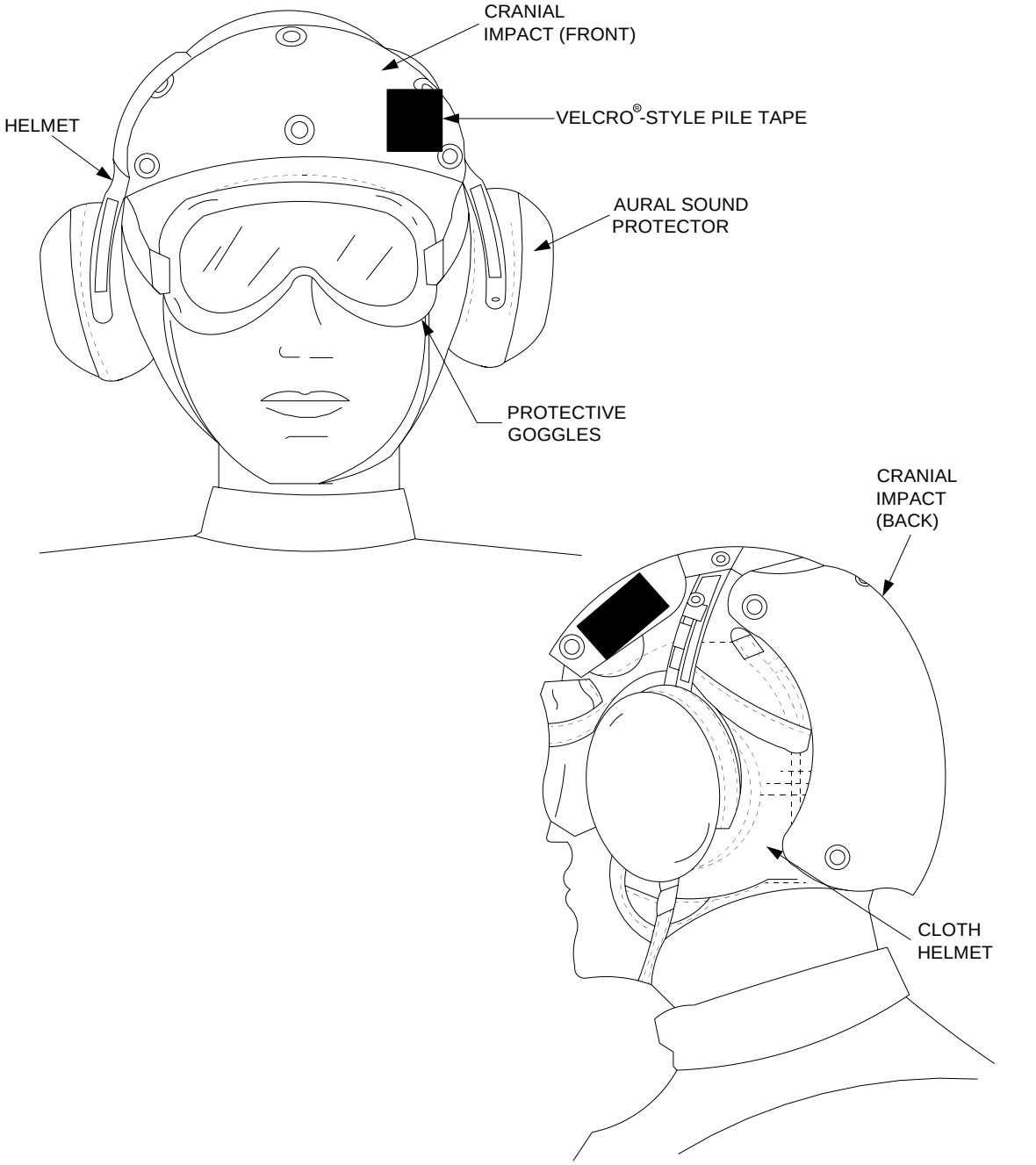

cg9100045a

Figure 4-1. HGU-25/P Helmet

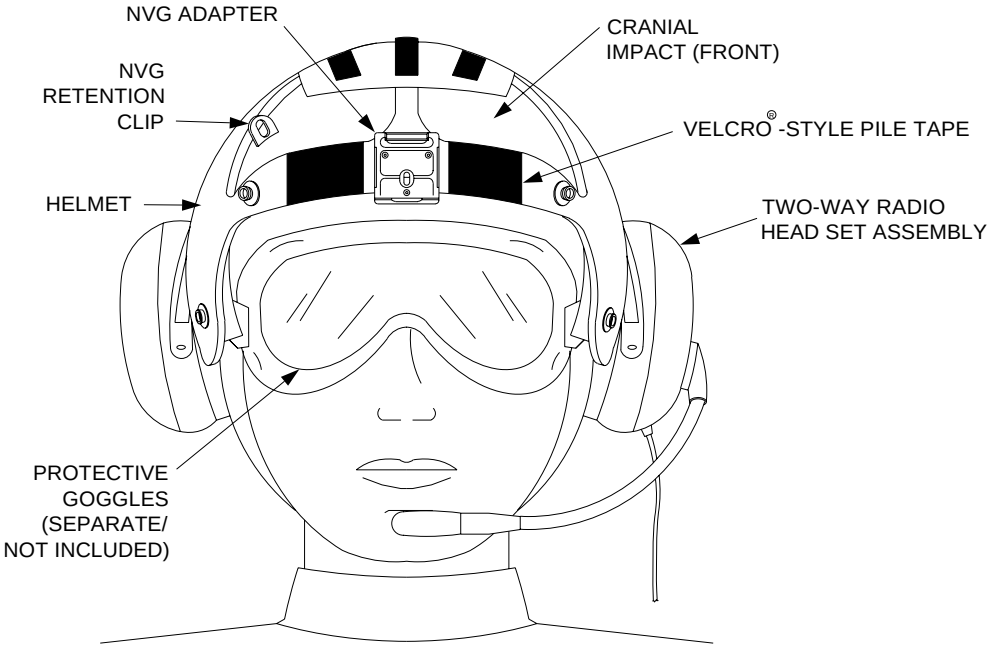

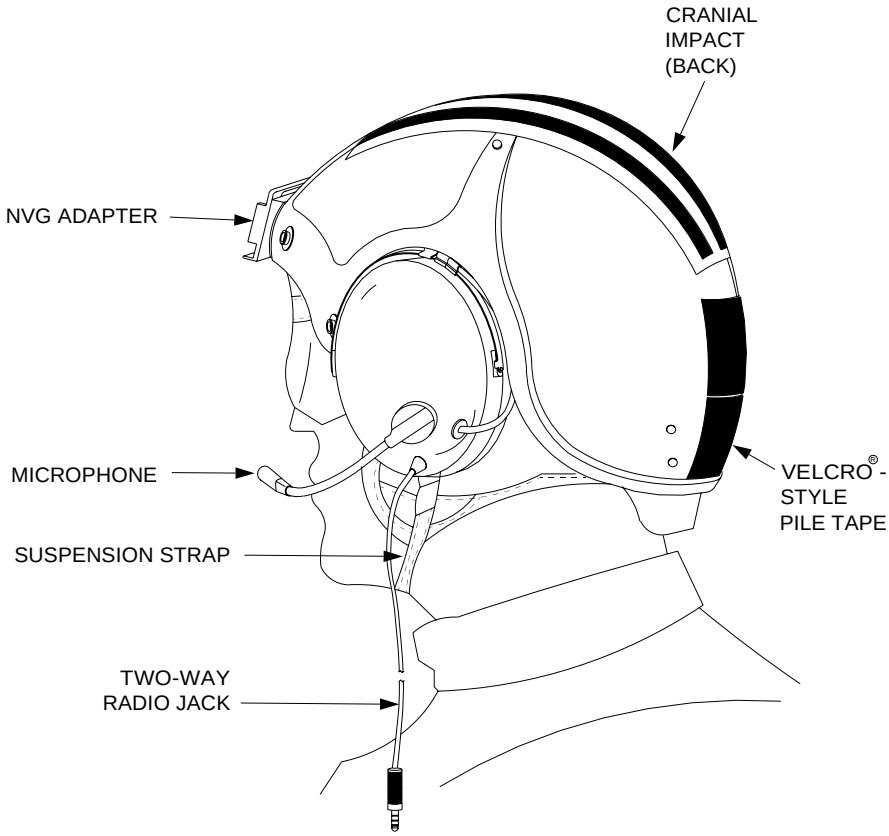

cg9100046a

Figure 4-2. K-10 Helmet Assembly

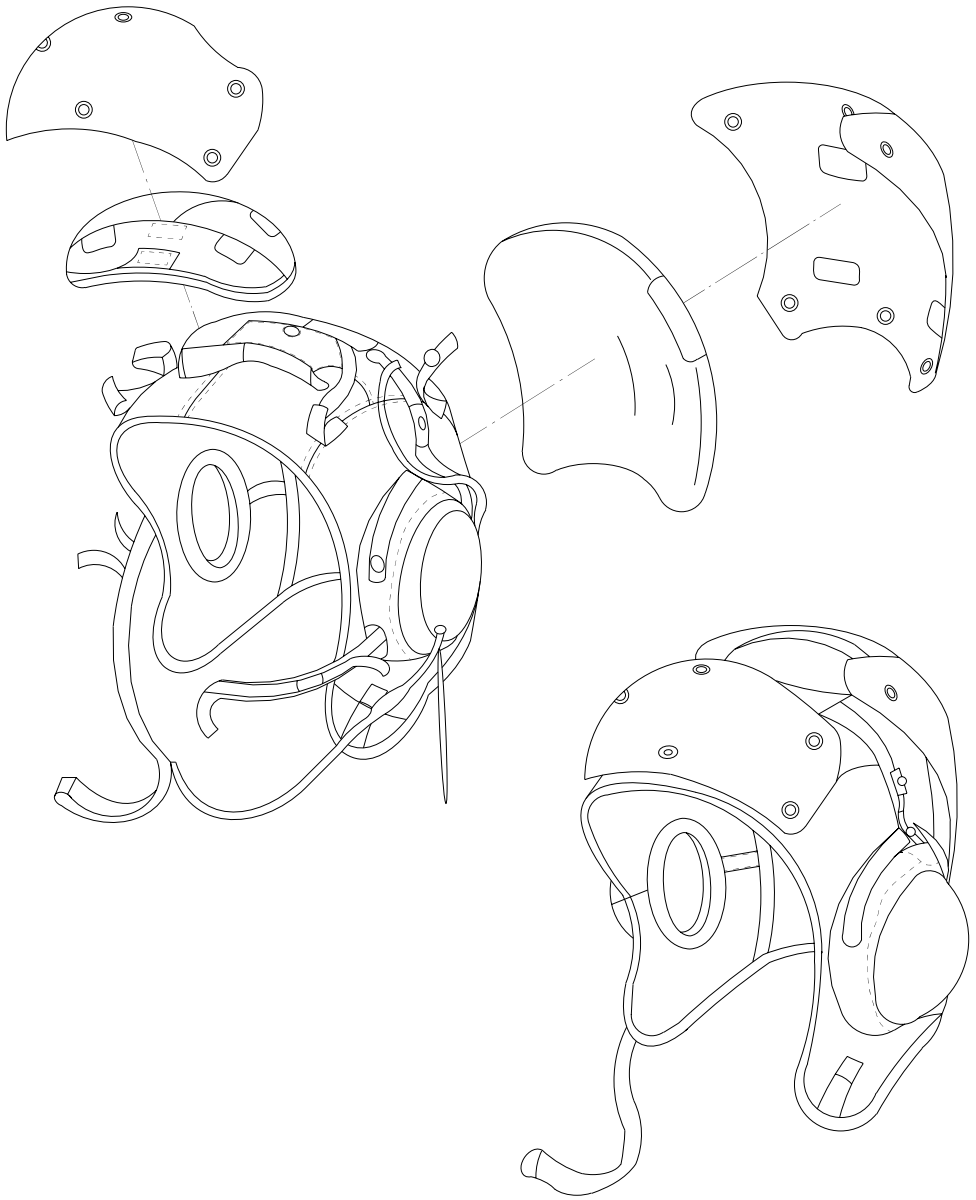

cg9100047a

Figure 4-3. HGU-25/P Helmet Assembly

3. Jersey. All flight deck personnel shall wear fire-resistant, long-sleeved jerseys, except for the rescue crew. For maintenance, machine wash with hot water (no bleach) and tumble-dry. Replace if torn or worn.

4. Lifevest.

   a. The LPU-30 is the CG designation for the Stearns LPU-30 Lifevest. The LPU-30 Lifevest is worn by all flight deck personnel. The LPU-30 inflates automatically upon immersion in water, providing a minimum of 24 pounds of buoyancy, and is self-righting. The design keeps an unconscious wearer's head face up and out of the water while awaiting rescue. The LPU-30 Lifevest consists of:

      (1) An outer cover and a bladder with a CO2 inflation assembly.

      (2) Oral inflation tube.

      (3) Pockets containing a strobe light and sea dye marker that are sewn onto the outer cover.

      (4) Whistle with lanyard.

   b. The LPU-30 Lifevest may be ordered fully assembled, with bladder, auto-inflate mechanism, outer cover, and survival equipment. Individual components of the lifevest may also be procured individually. Assembly of the LPU-30 Lifevest is completed in three stages:

      (1) Assembly of the bladder.

      (2) Installing the bladder in the outer cover.

      (3) Installing the survival equipment.

   c. Refer to Figure 4-4 through Figure 4-7 for assembly details.

   d. Outer Cover. New outer covers are supplied with dye marker and strobe light pouches already installed. The cutter's name shall be stenciled on the back of the vest, using 1-inch letters. Each vest shall be numbered for Preventive Maintenance System (PMS) tracking.

   e. Bladder. If a protective shipping cover is installed on the pressure relief valve, remove and discard it (not applicable on new style Stearns bladder). Ensure that a 2- by 4-in Velcro®-style hook tape is installed on the bladder; if not, use adhesive, NSN 8040-00-515-2246, to install the strips on the left front side of the bladder (not required on new style Stearns bladder). Ensure that the Velcro® pieces hold the bladder assembly in place to prevent twisting. New style Stearns bladders have integrated snaps on the left and right lobes, which attach to the outer cover.

      (1) Chemical Pill Automatic Inflation Assembly.

         (a) Attach the Chemical Pill auto-inflation assembly to the bladder as follows (not necessary on fully assembled Stearns bladders with incorporated auto-inflate):

[1] Remove and discard any setscrews from the side of the inflation assembly.

[2] Remove the retaining nut from the inflation assembly stem on the bladder.

[3] Slide the small ID gasket over the stem until it is positioned in the notch at the bottom of the stem.

[4] Slide the inflation assembly all the way onto the stem, ensuring proper alignment.

[5] Slide the large ID gasket onto the stem.

[6] Install the retaining nut and torque to 8 (+/-1) inch-pounds, being careful not to damage the gasket.

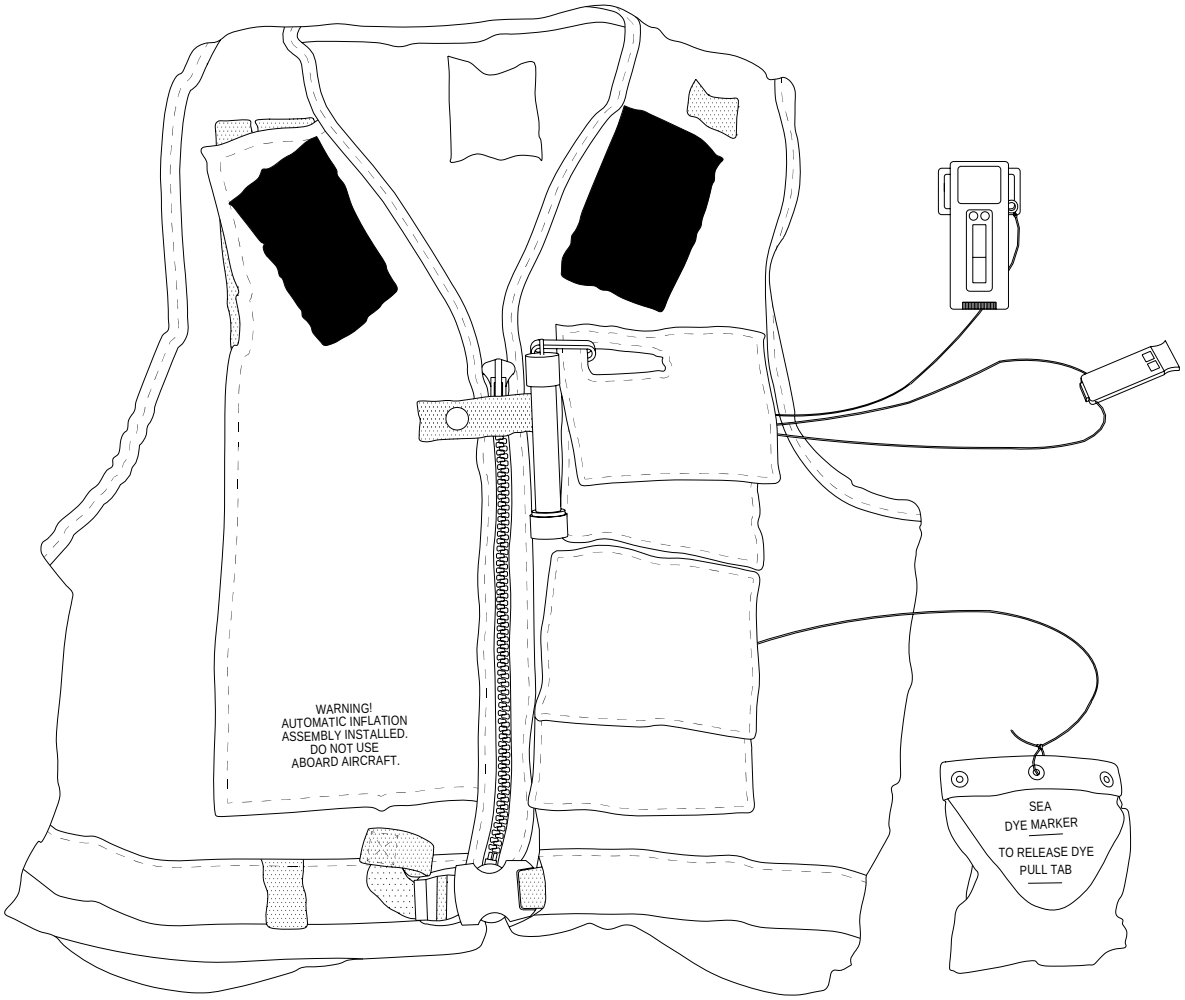

cg9560001a

Figure 4-4. LPU-30 Life Preserver Assembly and Parts Nomenclature

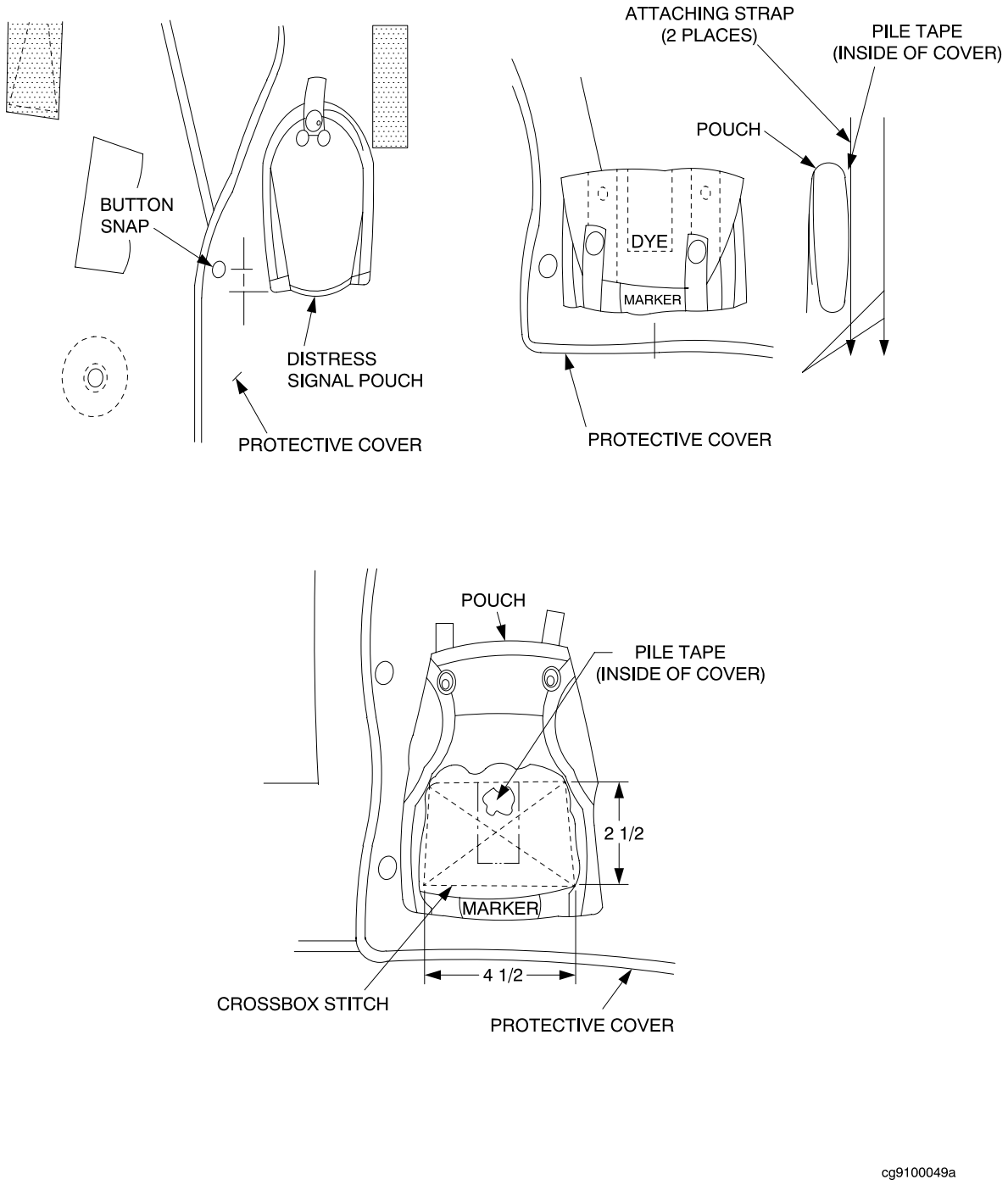

Figure 4-5. LPU-30/P Assembly Details

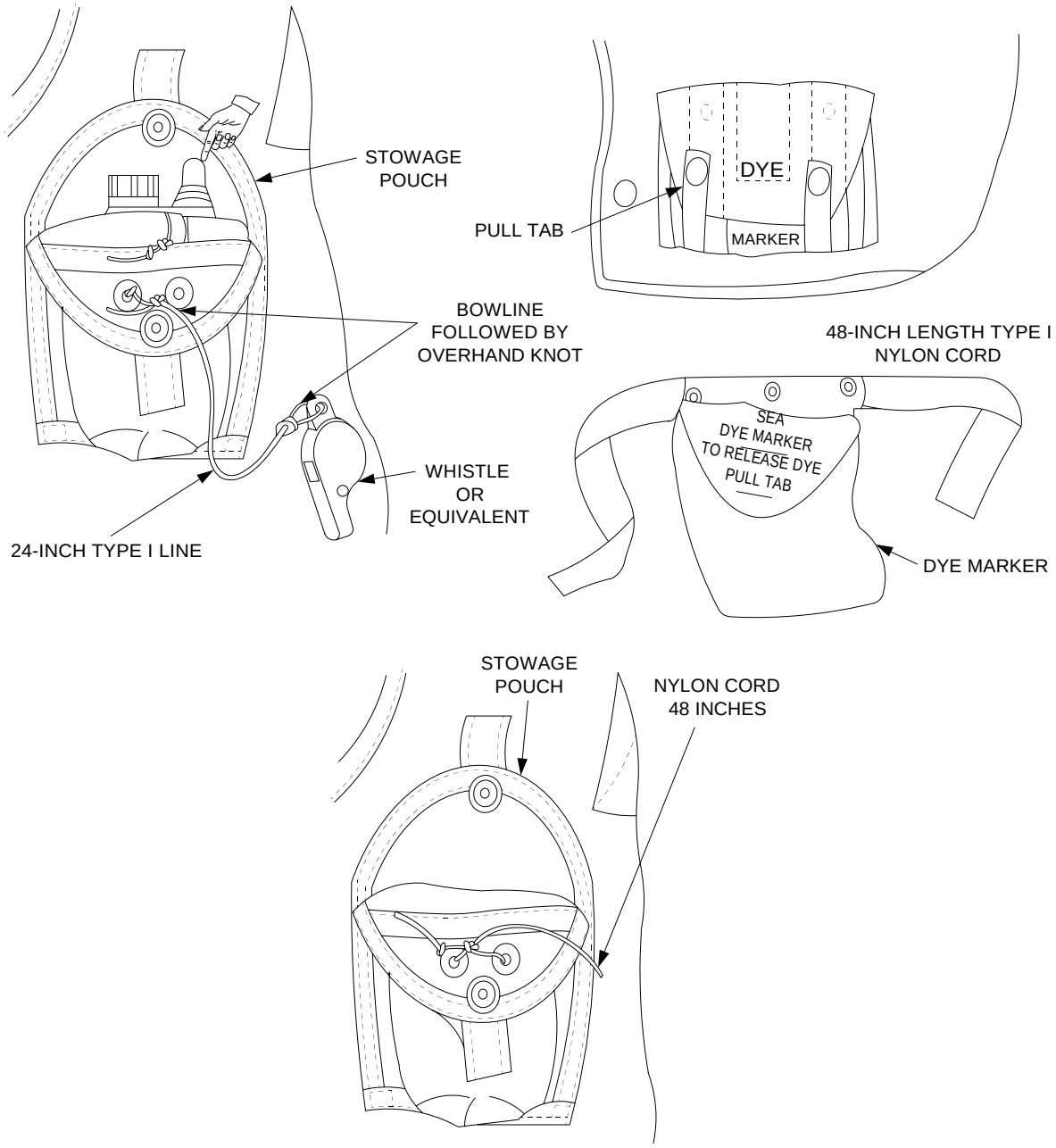

cg9100050a

Figure 4-6. LPU-30/P Equipment Details

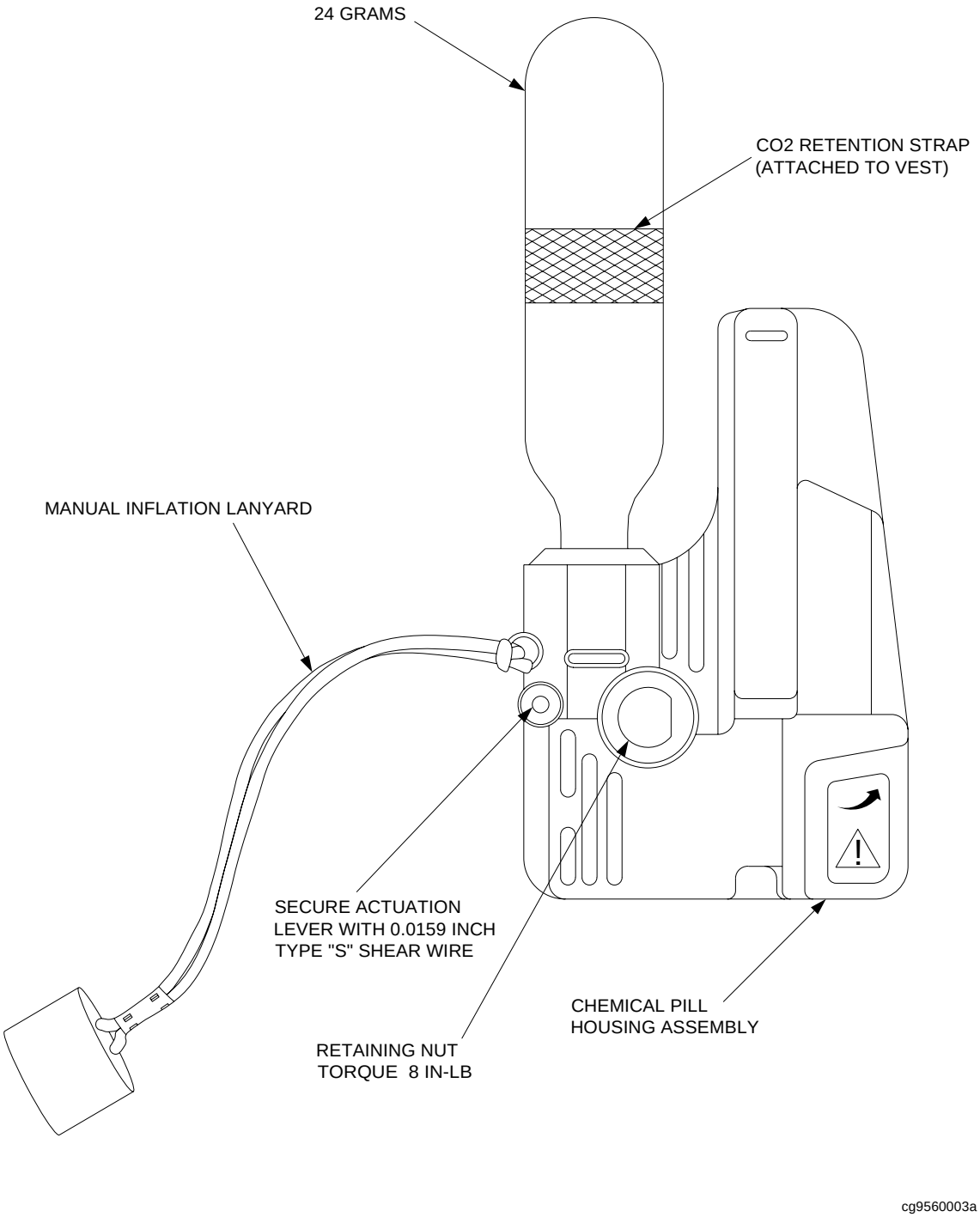

Figure 4-7. LPU-30/P Inflation Assembly Detail

CAUTION

AN IMPROPERLY TORQUED NUT MAY RESULT IN LEAKAGE WHEN INFLATING.

(b) Pass one strand of uncoated 0.0159-inch Type-S shear wire (NSN 6145-00-838-9444) through the hole in the inflation assembly, with the actuation lever up against the body of the inflation pass the wire through the hole in the actuation lever.

(c) Secure the wire by twisting both ends together a minimum of four times and trim off the excess.

(d) Install the chemical pill in the assembly. The red to green indicator at the left of the pill compartment will change from red to green when the pill is correctly installed. Failure to install the pill before inserting bottle will cause the CO2 bottle to expend its charge.

(e) Install the CO2 cylinder hand-tight, being careful not to cross-thread. Vests with red to green indicator at base of bottle near the Manual actuation lanyard should change from red to green when the bottle in tightened down (see Figure 4-7).

(2) Installing the Bladder in the Cover. With the bladder and cover laid out right side up:

(a) Install the bladder.

[1] Start with the bottom of the side of the bladder that does not have the inflation assembly installed.

[2] Go up through the opposite side of the cover, through the collar, and down the other side of the cover.

(b) Make sure the bladder does not become twisted during installation.

(c) Insert the oral inflation tube through its hole in the outer cover and position it under the keeper.

(d) Insert the bladder assembly through its hole in the cover. Position the CO2 cylinder under the inflation cylinder keeper webbing.

(e) Secure both snaps on the bladder (if equipped) to the corresponding snaps on the outer cover. For older style bladders without snaps, utilize hook and pile tape to secure the bladder to the outer cover.

CAUTION

DO NOT REMOVE AND REATTACH THE INFLATION ASSEMBLY AFTER INSERTING BLADDER INTO OUTER COVER. A FAULTY SEAL WILL RESULT IF FABRIC FROM THE COVER BECOMES PINCHED BETWEEN THE INFLATION ASSEMBLY AND THE BLADDER.

(3) Other Inflation Assemblies/Updated Auto-Inflation Assembly (AIA).

(a) Manual inflation assemblies and battery operated auto-inflation assemblies are not authorized for flight deck use.

CAUTION

WHEN INSTALLING THE AIA ON THE BLADDER, IT IS IMPERATIVE THAT THE INFLATION ASSEMBLY RETAINING NUT BE TORQUED BETWEEN 8 AND 10 INCH-POUNDS. AN IMPROPERLY TORQUED NUT MAY RESULT IN LEAKAGE WHEN INFLATING.

(4) AIAs in Aircraft. The AIAs were not designed to be worn in aircraft. Automatic inflation of the assembly in a ditching situation could trap the wearer in a submerged aircraft. To prevent inadvertent use, stencil the following directly on the inflation assembly cover flap or on a white or reflective piece of material which is then sewn on the inflation assembly cover flap:

WARNING

AUTOMATIC INFLATION ASSEMBLY VESTS ARE NOT PERMITTED ABOARD AIRCRAFT.

(5) AIAs Chemical Pill Installation. Installation of auto-inflate chemical pill:

(a) Remove cylinder from inflation assembly.

(b) Lift actuation lever until a click is heard; this will relieve pressure on the chemical pill.

(c) Tilt inflation assembly to allow chemical pill to fall out.

(d) Discard chemical pill.

(e) Insert new chemical pill in holder.

(f) Lower actuation lever to original closed position against inflation assembly body.

(6) Survival Equipment Installation.

(a) Strobe Light

[1] Remove and discard the protective plastic switch cover from the strobe light (if supplied).

[2] Apply a 2- by 2-in piece of Velcro®-style hook tape to one side of the light. Install the battery(ies) and test.

[3] Tie one end of a 48-inch length of Type I nylon cord (MIL-C-5040) using a bowline followed by an overhand knot to one of the brackets on the strobe light and to the grommets on the outside of the pocket.

[4] Stow the light and cord in the pouch with the light dome facing down, and snap the cover shut. The Firefly 2 strobe light has been replaced with the Firefly 3 water bug strobe light. The new strobe light is water activated. The stock number remains the same as the Firefly 2 strobe light. Firefly 3 shall be installed with the light dome facing up.

(b) Whistle

[1] Tie one end of a 24-inch length of Type I nylon cord (MIL-C-5040) to the whistle.

[2] On older model vests (with sewn-on strobe pouches): Tie the other end through the grommets on the outside of the strobe light pouch. Use a bowline followed by an overhand knot to stow the whistle on top of the strobe light.

[3] On newer versions of the vest (with integral pockets): Tie the other end through the grommets on the outside of the inflation assembly cover, using a bowline followed by an overhand knot, stowing the whistle and cord in the installed pocket at the top of the cover.

[4] The cord shall be routed inside of the inflation assembly cover.

[5] In addition to the conventional whistle, there is also a flat orange whistle designed to fit in the small, flat pocket in the inflation assembly cover flap. This whistle is attached to the tape on the pocket with 24 inches of nylon cord secured with a bowline knot and installed in the flat pocket.

(c) Dye Marker

[1] Tie one end of a 48-inch length of Type I nylon cord (MIL-C-5040) to the center grommet on the dye marker. Tie the other end through the pull-tab on the left side of the pouch, using a bowline followed by an overhand knot.

[2] Stow the dye marker and cord in the pouch and snap it shut.

Table 4-2. LPU-30 LIFEVEST MAINTENANCE RECORD

VEST NUMBER _____ DATE PLACED IN SERVICE _____				
Task	Annual Date Completed	Quarterly Date Completed	Quarterly Date Completed	Quarterly Date Completed
Year One				
1. Check condition of cover for wear and cleanliness.				
2. Remove and check CO2 cartridge, replace as required.				
3. Inflate bladder through oral inflation tube with 1 PSIG for 4 hours.	N/A			
4. Check safety equipment for proper operation.				
5. Check pill for erosion and replace as necessary.				
6. Remove bladder from cover, inflate with CO2 assembly, check for leaks. Leave bladder inflated for 4 hours. Ensure the bladder maintains pressure (not required on newer style Stearns bladders with auto-inflate).		N/A	N/A	N/A
Year Two				
1. Check condition of cover for wear and cleanliness.				
2. Remove and check CO2 cartridge, replace as required.				
3. Inflate bladder through oral inflation tube with 1 PSIG for 4 hours.	N/A			
4. Check safety equipment for proper operation.				
5. Check pill for erosion and replace as necessary.				
6. Remove bladder from cover, inflate with CO2 assembly, check for leaks. Leave bladder inflated for 4 hours. Ensure the bladder maintains pressure.		N/A	N/A	N/A
Year Three				
1. Check condition of cover for wear and cleanliness.				
2. Remove and check CO2 cartridge, replace as required.				
3. Inflate bladder through oral inflation tube with 1 PSIG for 4 hours.	N/A			
4. Check safety equipment for proper operation.				
5. Check pill for erosion and replace as necessary.				
6. Remove bladder from cover, inflate with CO2 assembly, check for leaks. Leave bladder inflated for 4 hours. Ensure the bladder maintains pressure.		N/A	N/A	N/A

(7) Maintenance Requirements. LPU-30 Lifevest maintenance consists of quarterly inspections and annual functional tests. Each life preserver shall be individually identified and tracked in a PMS program. The LPU-30 Lifevest/LPU-30 Maintenance Log, shown in Table 4-2, is required and shall be retained on file for 3 years. Ensure the cutter name is stenciled in 1-inch letters on the back of the vest (i.e., USCGC BEAR).

(a) Annual Functional Check. Once a year, at the beginning of the quarterly inspection, conduct a functional check of the life preserver.

[1] Manually inflate the bladder by pulling the Manual inflation lanyard.

[2] Check for leaks around the inflation assembly.

[3] Leave the bladder inflated for 4 hours. Ensure the bladder maintains pressure.

[4] Deflate the bladder through the oral inflation tube. Reset and rewire the actuation lever, install new CO2 cylinders, and reinstall the bladder in the outer cover (see Paragraph 4.D.4.e.(2)).

[5] Complete the quarterly inspection.

[6] Record the functional check and inspection in the LPU-30 lifevest PMS log. The LPU-30 lifevest/LPU-30 Maintenance Log shown in Table 4-2, is required and shall be retained on file for 3 years.

(b) Quarterly Inspections. The following inspections shall be completed on each life preserver once a quarter:

[1] Check the condition of the life preserver cover for wear and cleanliness.

[2] Make necessary repairs to tears in the fabric. Replace the cover if beyond repair.

[3] Soiled covers may be washed with mild soap and water after removing the bladder and the contents of the pouches; do not use bleach.

[4] Remove the CO2 cylinder(s) and check that they are not expended. If CO2 cylinders show signs of corrosion, replace with new cylinders.

[5] Replace the cylinders and hand tighten. Ensure not to damage the threads on the inflation assembly.

[6] Inspect and, if necessary, replace the shear wire around the actuation lever (see Paragraph 4.D.4.e.).

[7] Check that the strobe light, dye marker, and whistle are not missing.

[8] Test the strobe light and ensure proper operation.

[9] Replace strobe light batteries every two years or sooner if required.

[10] Check the condition of the dye marker and replace it if it shows signs of leakage.

[11] Ensure that the knots are tight on all of the lanyards.

[12] Replace the pill quarterly or as needed (check for erosion of pill due to exposure to water and/or high humidity).

[13] Record the inspection in the LPU-30 Lifevest PMS log. The LPU-30 Lifevest/LPU-30 Maintenance Log shown in Table 4-2, is required and shall be retained on file for 3 years.

5. Trousers. Uniform blousing straps shall not be worn by flight deck personnel during flight operations. Trousers shall be tucked into boots.

6. Safety Shoes. Rubber soled, full ankle length boots with steel toes shall be worn by all flight deck personnel, except for the rescue crew. Rescue crew equipment is described in Chapter 14. Replace boots when the soles wear out, the heels become loose, or the leather becomes torn.

7. Goggles. All flight deck personnel, except for the rescue crew, shall wear protective goggles. Rescue crew equipment is described in Chapter 14. Dark lenses are used for day operations and clear lenses for night operations. Lenses designed for protection from laser light alter and eliminate red light and shall not be worn. For maintenance, replace lenses when they become scratched or cracked. Both lenses shall be readily available to personnel.

8. Flash Hoods and Gloves. Flash hoods and gloves shall be worn by all fire party personnel and helicopter refueling teams and are recommended for all other flight deck personnel. For maintenance, machine wash with hot water and tumble dry. Replace if worn or torn.

9. Proximity Suits. Proximity suits for rescue crews are described in Chapter 14.

10. Cutter Swimmer Equipment. The cutter swimmer's equipment is normally stored in a flyer's kit bag. Swimmers SHALL ensure gear is free of moisture and salt while stored. Items should include the following:

    a. Full wet suit and/or dry suit (shorty wet suit may be used when water temperature permits).

    b. Mask, snorkel, and fins.

    c. Swimmer's harness.

    d. Safety line (600 feet of 1/4-inch polyethylene line) on a reel.

    e. Diver's rescue knife.

    f. V-blade or J-blade knife for strap cutting.

    g. SAR-1 lifevest with whistle and strobe light.

NOTE

Swimmer equipment shall be inspected and recorded using lifevest maintenance record, Table 4-2.

E. FLIGHT DECK OPERATING CRITERIA AND VLA.

1. Overview.

   a. Operating criteria and VLA include:

      (1) Deck surface and all landing area markings.

      (2) Clearances, lighting, visual approach equipment.

      (3) Accessories that permit a helicopter to operate safely from or in conjunction with a cutter.

   b. Operations with less than the minimum VLA imposed by this chapter are not permitted except with written authorization from Commandant (CG-711).

2. Flight Deck Surface. Flight deck and hangar decks shall be coated with a nonskid surface, as outlined in the Coatings and Color Manual, COMDTINST M10360.3 (series) and the NAVAIRWARCENACDIVLKE Air Capable Ship Aviation Facilities Bulletin No. 1 (series).

NOTE

Only Epoxy, roll-on, nonskid is authorized for use on Coast Guard cutters.

   a. Nonskid Surface.

      (1) The surface shall show a pattern of peaks and ridges. The ridge profile shall be continuous and reasonably uniform. Peaks and ridges shall be generally in the same direction (fore and aft preferred), approximately 1/2 to 1 inch apart, and approximately 1/16 to 3/32 in high.

      (2) Aggregate shall present a rough uniformly coarse appearance over the entire surface with no loosely bound clumps of particles. All weld seams shall be cross rolled from a minimum of 3 inches on either side of the weld.

      (3) All equipment not to be painted with nonskid shall be adequately taped or covered. Nonskid shall be applied up to 6 inches of the deck coaming. This will allow water to flow easily along the flight deck edge into the drains. All areas that are not nonskid shall be painted.

   b. Marking and Color Topping. Flight deck marking and nonskid locations shall be IAW applicable VLA guidance drawings. The marking and color topping shall be compatible with the paint system and from the same manufacturer. VLA and safety markings may be touched up or repainted for visibility with the appropriate paint.

NOTE

Use of color topping for cosmetic purposes is prohibited and cause for rejection of the nonskid installation and withdrawal of certification or authorization to conduct flight operations.

c. Delamination. There shall be no evidence of delamination of the nonskid. If delamination is present, the delaminated area shall be satisfactorily repaired before flight deck certification.

d. Nonskid Cosmetic Appearance. Cleaning, touch up, and remarking of the nonskid shall be accomplished IAW the Coatings and Color Manual, COMDTINST M10360.3 (series). Nonskid may be washed with a cleaner approved by the coating's manufacturer to remove stains, chalking, and residual oil in order to maintain the cosmetic appearance.

e. Nonskid Repair. With prior approval from ATC Mobile Ship-Helo Branch, cutters are authorized to make minor repairs to areas of delaminated nonskid. All repairs shall be IAW Coating and Color Manual, COMDTINST M10360.3 (series) and the NAVAIRWARCENACDIVLKE Air Capable Ship Aviation Facilities Bulletin No. 1 (series).

3. In-Deck and Bulkhead Tiedown Fittings. Deck and bulkhead fittings shall be installed and tested IAW NAVAIRWARCENACDIVLKE Air Capable Ship Aviation Facilities Bulletin No. 1 (series). New or replacement deck fittings shall be in-deck crossbar-type.

WARNING

THE TAIL STINGER ON THE H-65 CAN BECOME EMBEDDED IN RAISED DECK TIEDOWN FITTINGS, AND MAY RESULT IN INJURY TO PERSONNEL AND/OR LOSS OF THE AIRCRAFT.

4. Deck Edge Protection (Safety Nets and Catwalks).

a. Deck edge protection shall be installed and tested IAW NAVAIRWARCENACDIVLKE Air Capable Ship Aviation Facilities Bulletin No. 1 (series).

b. New or replacement deck edge protection shall be IAW NAVSEA drawings 803-5000902 or 803-51484097 (group). Nylon webbing used in catwalks shall be IAW MIL-W-23223A.

5. Landing Area Markings. Flight deck markings provide required obstacle clearance for helicopter operations and assist the pilots and LSO with situational awareness during launch and recovery. They shall be IAW the appropriate NAVAIR drawing. All portions of any equipment that impinges on a VLA marking shall be painted white, so that the VLA marking appears to be continuous. Typical VLA arrangements are shown in Figure 4-8 and Figure 4-10.

a. Peripheral Lines. These lines outline the helicopter landing area and indicate the clear (obstruction-free) deck area.

b. Touchdown Circle. The 24-foot diameter touchdown circle indicates the area that the helicopter's forward wheels or skid supports must touch down. No obstructions above deck level, including raised deck tiedown fittings, are permitted inside the touchdown circle.

NOTE

The H-65 shall be landed with both the nose wheel and the main landing gear inside the touchdown circle to ensure proper rotor obstruction clearance and positioning of the tail stinger over the flight deck.

c. Landing Spot. A 4-foot diameter solid white dot is located in the center of the touchdown circle.

d. Landing Lineup Line. Solid white lines through the landing spot indicate the approach path for landings. Helicopters landed on the appropriate lineup line with the forward wheels or skid supports within the landing circle will have all other wheels on deck, and will be clear of all obstructions. The landing lineup line(s) may be oriented fore and aft, at an angle (oblique), or athwartships (WAGB only). The fore and aft lineup line is extended up the superstructure.

e. VERTREP T-Line. A white T-line through the landing circle that provides obstacle clearance for the helicopter. The helicopter's main and tail rotor hubs must remain at or aft of this line during VERTREP operations. The VERTREP area is aft of the VERTREP line. This area is used for pickup and delivery of cargo.

f. VERTREP T-Ball Line. In addition to the T-line, the WMSL 418 is equipped with a white T-Ball line located aft of the T-Line. The T-Ball line provides obstacle clearance for larger aircraft and does not apply to Coast Guard H-60 and H-65 helicopters. For applicable helicopters, the main and tail rotor hubs must remain over or aft of the T-Ball during VERTREP operations.

g. HIFR Marking. Cutters capable of HIFR display the letter H at the aft port corner of the flight deck.

h. TALON Alignment Lines. A set of two white lines are painted on the starboard side of the flight deck to enable the aircrew to assist the pilot with fore-and-aft positioning of the aircraft over the TALON grid.

(1) Each line is 12 inches wide, begins at the deck edge, and extends 30 inches inboard.

(2) The aft line shall be painted in a position so that the forward edge of the line is 11 inches forward of a line drawn tangent to the forward edge of the TALON grid.

(3) The forward line shall be painted in a position so that the aft edge of the line is 82 inches forward of a line drawn tangent to the forward edge of the TALON grid (Figure 4-10).

6. Hangar Area Markings.

   a. Hangar Deck Markings. Hangar area markings provide specific information for helicopter traversing and parking, and shall be IAW Air Capable Ship Aviation Facilities Bulletin No. 1 (series).

   b. Hangar Door Markings.

      (1) On cutters with vertically activated doors, the lower 2 feet of the door (exterior and interior) is painted with alternating yellow and red stripes. This provides a visual indication that the door has been fully retracted before helicopter movement into and out of the hangar.

      (2) Doors that leave yellow or red stripes visible in the fully retracted position shall have black alignment stripes painted in the upper corners of the doorway, on the door (exterior and interior), and on the adjacent track or bulkhead to indicate full retraction for adequate helicopter traversing clearance. Each alignment stripe segment shall be 2 inches wide, 6 inches long and readily visible from the deck.

   c. TALON Alignment Line Marking. On TALON equipped cutters with oblique approach requirements, a 12-inch wide black stripe is painted down the center of the hangar door to aid in lateral alignment of the helicopter.

   d. Hangar Access Line(s) and Wheel Spot Marking. These markings are used to park helicopters in the hangar and for guiding helicopters into and out of the hangar.

7. Obstacle Clearance Criteria. Flight deck markings meet the minimum obstacle clearance criteria established in the Air Capable Ship Aviation Facilities Bulletin No.1 (series), to provide a minimum safe deck area in which to operate helicopters.

   a. The helicopter landing area is the area outlined by the white peripheral lines. Obstructions within the area but outside the touchdown circle are smoothly contoured, and do not exceed 4½ inches in height.

   b. No obstructions above deck height exist within the touchdown circle.

WARNING

STOWAGE OF ITEMS ON THE FLIGHT DECK SHALL NOT BE PERMITTED DURING FLIGHT OPERATIONS.

8. Lighting and Visual Approach Equipment. Lighting and visual approach equipment shall be installed IAW applicable NAVAIR drawings, which are based upon the requirements of NAVAIRWARCENACDIVLKE Air Capable Ship Aviation Facilities Bulletin No. 1 (series). The VLA equipment is designed to provide sufficient lighting over the landing area to allow the pilot to land or take off visually, provide reflected lighting on the superstructure forward of the landing area to allow for maximum depth perception, and provide other lights as required to aid the pilot in cutter location and orientation. Lighting not

specifically addressed in the following paragraphs shall not be used during flight operations.

a. Homing Beacon (White). The homing beacon provides a visual guide to aid the pilot in locating the cutter at night and during periods of low visibility. During nighttime operations, the homing beacon shall be secured once the aircraft is on final approach with cutter in sight. The beacon is a flashing white light located as high up on the mast as feasible and positioned so that it may be readily seen at all azimuth angles. The beacon produces approximately 90 white flashes per minute.

b. Deck Edge Lights (Red). These lights provide the pilot with a visual indication of the deck edge on the landing approach path. During nighttime operations, deck edge lighting is optional. If used, recommend setting the light intensity to approximately 10% illumination. Further adjustments to the illumination level may be made with the concurrence of the aircrew and LSO.

c. Deck Lineup Lights. These lights assist the pilot in finding the cutter, determining the cutter orientation at night, and during periods of low visibility. Lineup lights shall be set to steady when the aircraft is on final approach with the cutter in sight.

SYMBOL	NOMENCLATURE/COLOR	SYMBOL	NOMENCLATURE/COLOR
	HOMING BEACON (WHITE)		OVERHEAD FLOODLIGHTS (YELLOW)
	DECK EDGE LIGHTS (RED)		DECK SURFACE FLOODLIGHT (RED)
	LINEUP LIGHTS (WHITE), DECK INSTALLED		HANGAR WASH FLOODLIGHTS (RED)
	FORWARD EXTENDED LINEUP LIGHTS (WHITE)		DECK STATUS LIGHT (RED, AMBER, GREEN)
	AFT EXTENDED LINEUP LIGHTS (RED)		SGSI (RED, AMBER, GREEN)
	FLASH SEQUENCER		WAVEOFF LIGHTS (RED)
	OBSTRUCTION LIGHTS (BLUE)		

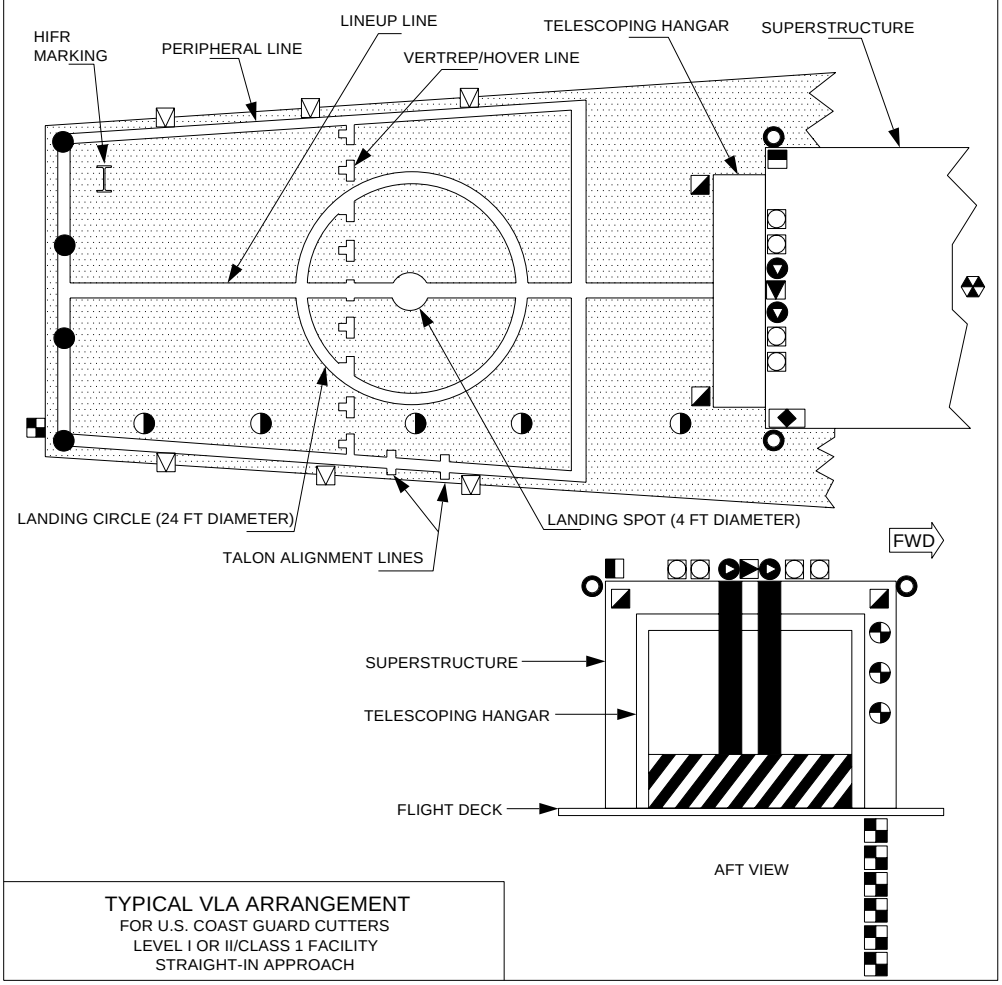

TYPICAL VLA ARRANGEMENT
FOR U.S. COAST GUARD CUTTERS
LEVEL I OR II/CLASS 1 FACILITY
STRAIGHT-IN APPROACH

cg9100053a

Figure 4-8. Typical VLA Arrangement: Straight-In Approach

SYMBOL	NONMENCLATURE/COLOR	SYMBOL	NONMENCLATURE/COLOR
	HOMING BEACON (WHITE)		OVERHEAD FLOODLIGHTS (YELLOW)
	DECK EDGE LIGHTS (RED)		DECK SURFACE FLOODLIGHTS (RED)
	LINEUP LIGHTS (WHITE), DECK INSTALLED		HANGAR WASH FLOODLIGHTS (RED)
	AFT EXTENDED LINEUP LIGHTS (RED)		DECK STATUS LIGHT (RED, AMBER, GREEN)
	OBSTRUCTION LIGHTS (BLUE)		SGSI (RED, AMBER, GREEN)
	FORWARD EXTENDED LINE-UP DEVICE		WAVEOFF LIGHTS (RED)

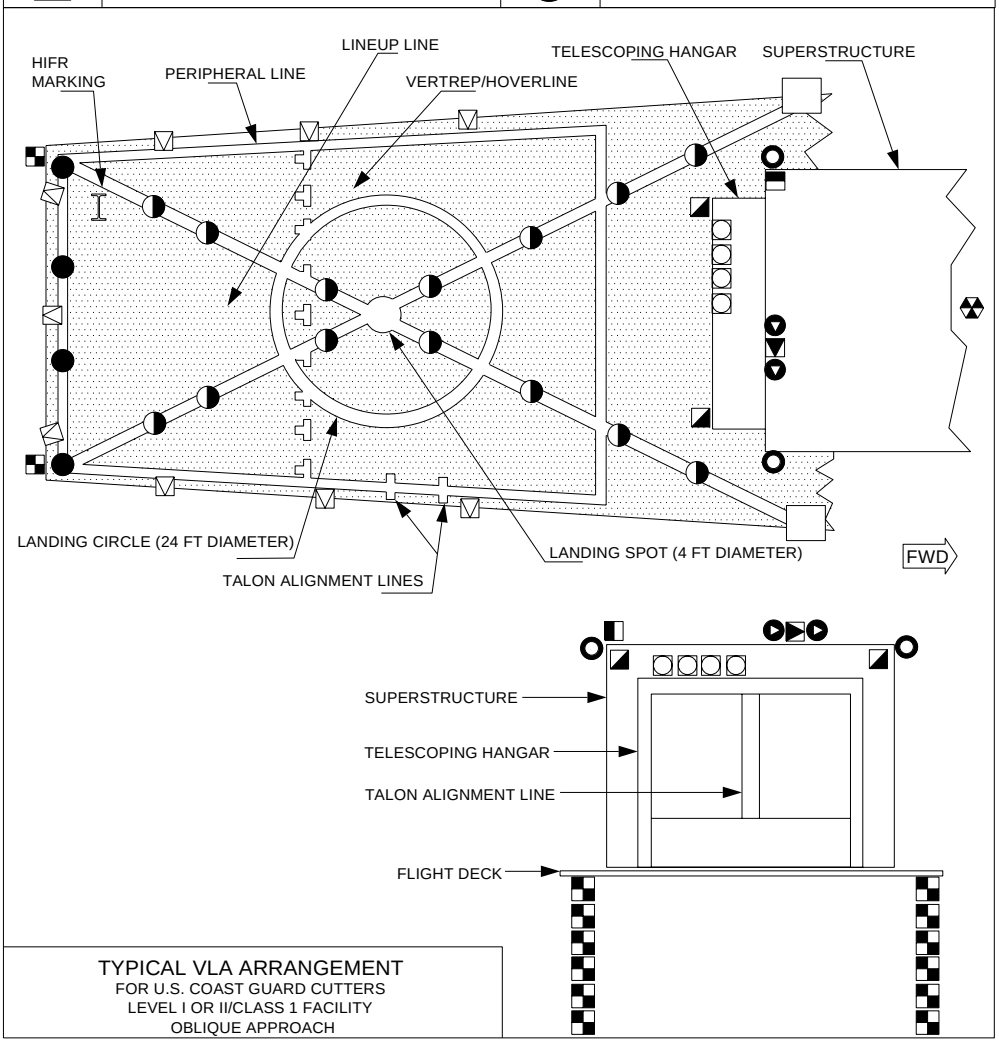

cg9100054a

Figure 4-9. Typical VLA Arrangement: Oblique Approach

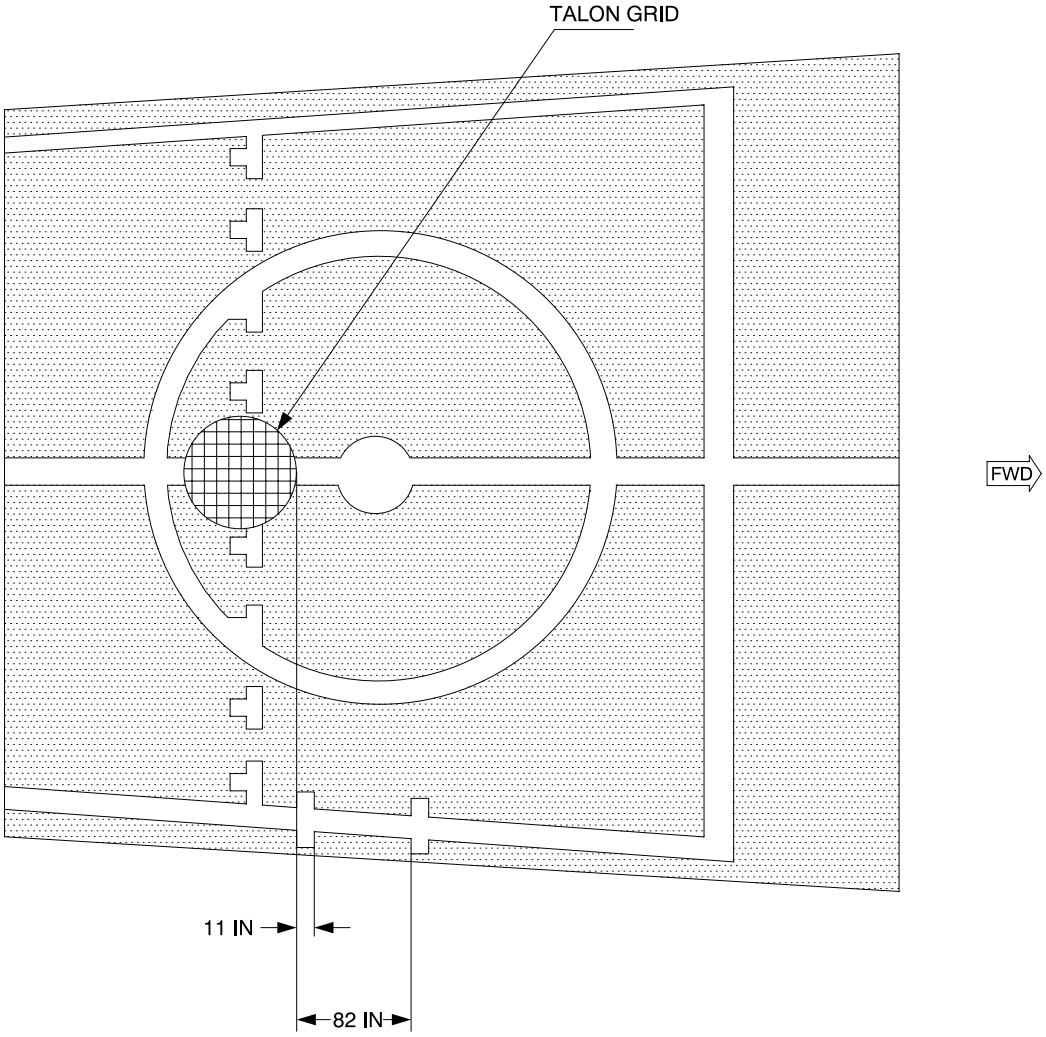

cg9100055a

Figure 4-10. Typical H-65 TALON Alignment Line Layout

(1) Deck Installed (White). These lights are installed in the flight deck parallel to the landing lineup line(s). Lights can be set on either steady illumination, or to strobe sequentially from aft to forward.

(2) Forward Extended (White). These lights extend the line of deck installed lights forward, above the flight deck level. See Paragraph 4.E.8.m.

(3) Aft Extended (Red). A vertical drop line light bar assembly extends the line of the deck installed lights aft, below the flight deck level.

(4) Lineup Lights. During nighttime operations, deck edge lighting is optional. If used, recommend setting the light intensity to approximately 10% illumination. Further adjustments to the illumination level may be made with the concurrence of the aircrew and LSO.

d. HIFR Heading Lights (Yellow/Red). Three lights, mounted along the port superstructure above the flight deck, provide a visual reference to assist the pilot in maintaining proper position during HIFR operations. HIFR lights are not installed on WMEC 210 cutters.

(1) Yellow lenses are used for non-NVG operations. Red lenses may be installed during times of war.

(2) HIFR lights are not used during NVG operations and are optional for unaided pilots.

(3) WMEC 210 cutters are approved to conduct night and NVG HIFR evolutions without HIFR heading lights with Coast Guard aircraft only.

e. Obstruction Lights (Blue). Obstruction lights mark hazards and are installed at the top and outboard limits of shipboard structures closest to the operating area. Obstruction lights are not used during nighttime operations.

f. Overhead Floodlights .

(1) Typical Installation. These lights are installed above and forward of the operating area to provide light for visual hovering over the landing area. The lights are aimed at the forward peripheral line (as depicted in Figure 4-8 and Figure 4-9).

(a) Yellow lenses are used during peacetime.

(b) Blue/green lenses are installed at all times on NVG-certified cutters. Recommend setting the light intensity to 100% illumination for nighttime operations. Further adjustments to the illumination level may be made with the concurrence of the aircrew and LSO.

(c) Red lenses are installed in time of war. (Does not apply to NVG-certified cutters.)

(2) Yellow or red overhead floodlights shall not be used on NVG-certified cutters.

NOTE

On WAGB 399 cutters the overhead floodlights are red.

g. Deck Surface Floodlights.

(1) Typical Installation. These lights are installed around and illuminate the landing area (Figure 4-8 and Figure 4-9). They are

aimed, in conjunction with the overhead floodlights, to provide best possible illumination while keeping spill over (illumination beyond the deck edge) at a minimum.

(2) The lights are equipped with an installed clear lens and removable red lens. Blue/green lenses are installed at all times on NVG-certified cutters. Recommend setting the light intensity to 100% illumination for nighttime operations. Further adjustments to the illumination level may be made with the concurrence of the aircrew and LSO.

(3) All parts of the deck surface floodlights that protrude over any VLA marking shall be painted white to provide continuity of VLA markings.

(a) HIFR/VERTREP Guards. Only the light closest to the H requires guards. The stock may be attached by either bolts or pop rivets. The guards, when installed, shall not alter the illumination characteristics of the light or the flight deck.

(b) WAGB 399 Cutters. These lights are not installed. Illumination is provided by two white utility floodlights, one mounted at each aft flight deck corner.

(4) The lights are mounted to provide for movement horizontally and vertically for positioning and shall not extend more than 18 inches above the deck. They are lined up on the point where the aft part of the landing circle crosses the fore and aft lineup line, and are aimed at the deck about 3 feet in front of the light fixture. Glare shields minimize interference with the vision of the LSO and tiedown crew.

NOTE

Because of their optical characteristics, red lenses may appear red, orange, or amber when the lights are energized.

h. Hangar or Structure Wash Floodlights.

(1) Typical Installation. These lights illuminate the aft face of the hangar or superstructure, and help improve the depth perception of the pilots.

(2) The lights are equipped with an installed clear lens and removable red lens. Blue/green lenses are installed at all times on NVG-certified cutters. Recommend setting the light intensity to 100% illumination for nighttime operations. Further adjustments to the illumination level may be made with the concurrence of the aircrew and LSO.

(3) WAGB 399 Cutters. These lights are not installed. Illumination is provided by the utility floodlights.

i. Deck Status Light System.

(1) This system has a fixture consisting of three lights (red, amber, and green) and produces approximately 90 flashes per minute.

(2) The deck status light allows the HCO to provide visual indications to the helicopter crew and flight deck personnel of aircraft clearance to land, takeoff, start engine, engage rotors, or cleared for an evolution.

(3) The fixture is installed on the aft face of the hangar or superstructure. It can be readily seen by the pilot while preparing for takeoff and during the approach and landing evolution.

(4) The deck status light shall not be used during nighttime operations.

(5) In conjunction with LSO signals and radio messages:

(a) A green light signifies clearance for a particular evolution(s).

(b) Red signifies not cleared for a particular evolution(s).

(c) Amber signifies cleared to start or secure engines and engage or disengage rotors.

(6) This system is not installed on WAGB 399 cutters.

j. Stabilized Glideslope Indicator (SGSI). The SGSI provides the pilot with a visual tricolored indication of the proper approach path to the cutter at night and during low visibility. This system is not installed on WMEC 210 or WAGB 399 cutters. The SGSI shall not be used during nighttime operations unless requested by the pilot.

k. Waveoff Lights. Waveoff lights flash at approximately 90 flashes per minute and provide the pilot with a visual signal to abort an approach or landing. The HCO can activate the lights. The waveoff lights shall not be energized during nighttime operations. This system is not installed on WMEC 210 or WAGB 399 cutters.

WARNING

THE USE OF WAVEOFF LIGHTS DURING NIGHT-TIME OPERATIONS IS PROHIBITED.

l. Additional Lights. Other lights, including deck lighting, cargo lights, and searchlights trained into the water can aid the pilots in visual orientation upon pilot requests.

CAUTION

ANY SHIPBOARD LIGHTING NOT SPECIFICALLY APPROVED FOR USE DURING NIGHTTIME OP-ERATIONS SHALL NOT BE ENERGIZED WITHOUT APPROVAL OF THE CO AND PIC.

m. Forward Extended Lineup Device. The forward extended lineup device provides a forward extension of the oblique lineup line and gives the pilot final positioning information for the touchdown maneuver. The device can have lights or reflective tape to aid night operations. The device extends beyond the deck edge and above the flight deck level and the elevation angle is limited by obstacle clearance criteria.

9. Minimum Lighting. For night training, night operations, and periods of low visibility, all efforts shall be made to provide all the lights previously discussed.

Cutters shall carry adequate spare bulbs for the VLA system. If mission urgency requires and the cutter CO and PIC agree that safety will not be compromised:

a. Any one overhead floodlight, any one deck surface floodlight, and/or any one hangar or superstructure wash floodlight may be inoperative

b. Up to 20 percent of the in-deck and/or extended lineup lights may be inoperative if no two adjacent lights are inoperative.

10. Flight Deck Video System (FDVS). FDVS with full clear view of the flight deck is required on all cutters.

a. Two cameras, both with recording capability, one being a fixed view and one with pan, tilt, and zoom features are required for ROUTINE operations. At least one camera SHALL have date and time stamp recording capability. If using two different recording devices, every effort shall be made to synchronize date time stamps. For this requirement, a routine operation is defined as training or any mission that would not impact life, property, or national security interests.

b. COs may conduct helicopter operations using reduced camera capability for operational missions. Reduced camera capability is defined as a failure of recording capability, or failure of one camera. Cutters shall report operating with reduced camera capability via message to Commandant (CG-711) and their operational commander with Commandant (CG-751) and Ship-Helo as info addressees.

c. Ensure that video recordings of each helicopter operation are retained for at least 24 hours.

d. If a mishap or other incident occurs, a copy of the video of that mishap or event shall be forwarded to the Ship-Helo Branch, ATC Mobile. In case of a mishap requiring a Mishap Analysis Board (MAB), video recordings shall be impounded with all other pertinent logs and records and presented to the President of the MAB. This should include, but is not limited to, all fueling logs for last 12 months, aircraft log books, applicable medical records, and flight schedules for previous 72 hours.

11. Anemometers. Dual anemometers are requires for flight operations. If one or both are inoperative, cutters may request a waiver from Commandant (CG-711) to operate with Coast Guard aircraft. The Navy will consider the cutter uncertified for flight ops with an inoperative anemometer, so a waiver if approved, will be restricted to flight operations with Coast Guard aircraft only. See Chapter 1 for the waiver process.

CHAPTER 5. PLANNING, LIMITATIONS, COMMUNICATIONS, AND NAVIGATION.

A. INTRODUCTION. This chapter establishes criteria essential to the safety of flight operations conducted from or with Coast Guard cutters.

B. IN THIS CHAPTER. This chapter discusses the following topics:

1. Mission Planning.
2. Flight Deck Motion Limitations.
3. Weather Considerations and Limitations.
4. Helicopter and Aircrew Limitations.
5. Communications and Navigation.

C. MISSION PLANNING.

1. Overview.

   a. Careful and thorough mission planning is required for safe and effective ship-helo operations. The primary element of good mission planning is an assessment of the purpose and objectives of each mission weighed against the risks to which personnel and equipment will be exposed. Factors shall be analyzed, such as:

      (1) Aircrew and equipment capabilities and limitations.

      (2) Illumination levels for night and NVG operations.

      (3) Weather, flight deck motion.

      (4) Aircrew survivability.

   b. Changing factors shall also be analyzed, such as:

      (1) Rapid variations in weather conditions.

      (2) Malfunctions of helicopter or shipboard equipment, which can seriously affect the outcome of the flight and will require a re-evaluation of the mission plan.

   c. While not all possible contingencies can be addressed, the operational parameters delineated in this chapter and the guidance provided by the Risk Assessment Chart in the Coast Guard Air Operations Manual, COMDTINST M3710.1 (series), establish guidelines that should assist cutter COs and/or controlling agencies in their mission planning process.

2. Mission Planning Session.

   a. A mission planning session shall be conducted between the cutter's Operations Officer (for deployed helicopters) or controlling agency (for land-based helicopters, see Chapter 7) and the Senior Aviator or the PIC for the mission. The purpose and objectives of the mission shall be discussed and weighed against the risks that personnel and equipment will be exposed. A planned itinerary shall be developed that considers:

      (1) Cutter's intentions during the flight.

(2) Pattern to be flown by the helicopter, include the following:

(a) Magnetic courses.

(b) Leg distances and times.

(c) Turn points.

(d) Total expected flight time.

(e) Intended launch and recovery points.

(3) Other factors to be discussed include:

(a) Present and forecast weather.

(b) Routine takeoff data.

(c) Tactical procedures (i.e., code words and confidential datums).

(d) Communications and EMCON plan.

(e) Navigation and flight following equipment and methods.

(f) Alternate landing sites and fuel required to reach them.

(4) Mission situational awareness factors include:

(a) Airspace clearances.

(b) Training itinerary during mission.

(c) Sunset and sunrise.

(d) Water temperature and survivability factor.

(e) Solar Lunar Almanac Program (SLAP).

(f) Other surface and air assets.

(g) Current certification status.

(h) Hazards (cliffs, oil rigs, military exercise, etc.).

(i) Final risk assessment.

b. NVG Operations Planning Overview. This section on NVG planning is to assist pilots planning NVG operation(s). The considerations are broad in scope to enable all participants to use this section as a guideline for any NVG operation or training sortie.

(1) NVG Operations Objective. Whether a training or operational mission, pilots shall know their ultimate objective or goal.

(2) NVG Law Enforcement (LE) Objective. When planning NVG operations, consideration should be given to how effective the LE objective is under the cover of darkness.

(a) Detection capability at night. Visual or optical with NVGs to include image intensification systems and thermal systems as well as radar or electronic capabilities.

(b) Weapons system capabilities at night.

(c) Possible use of artificial illumination.

(3) Non-NVG Retrofitted Cutters. For missions other than training and with the concurrence of the Aircraft Commander and CO, aircraft may operate with a non-NVG retrofitted ship under the following conditions:

(a) The PAC is NVG shipboard qualified and current.

(b) A thorough brief is conducted before operations commence.

(c) All shipboard lighting (non-NVG compatible) visible from the deck landing qualification (DLQ) pattern is secured, masked, or turned to its lowest intensity.

(d) The waveoff lighting system is secured.

(e) The ship's crew is briefed on the importance of light discipline and light leakage from the interior of the ship.

(f) The aircraft has position lights illuminated for visibility by the LSO.

(g) The LSO is briefed on the evolution and uses either NVG compatible signaling devices or unlit signaling devices.

(h) Ambient light is sufficient to allow adequate pilot visual cues over the flight deck environment.

(4) NVG Operations Environmental Considerations.

(a) Illumination. NVGs operate on the principle of light amplification from both natural (moon, stars, etc.), as well as artificial (city lights, ship lights, etc.) NVGs should not be used under high light conditions such as when the sun is just below the horizon. Consideration should be given to other bright light sources such as a full moon or lights from nearby ships or oil rigs. In situations where bright light sources exist, the planner should take these sources into account and brief both the pilots and LSOs on their significance.

(b) Weather. Weather will influence NVG operations. Special consideration should be given to any atmospheric phenomena which obscures or distorts ambient or artificial light sources. Particular areas of interest are:

[1] Cloud Cover. This affects ambient light levels and creates shadows cast by clouds that can create visual illusions.

[2] Atmospheric Obscurants. These phenomena include haze, fog, snow, rain, smoke, dust, etc., that reduce NVG capabilities. Severe haze or fog can eliminate the ability of the NVG user to see a horizon, which is one of the major attributes of NVG use.

3. International, Special Use, or Foreign Airspace. Aviation flight planning in or near international, special use, or foreign airspace may require precise coordination with sufficient lead time. The consequences of inadequate or

improper flight planning may cause a political incident and can place the aircrew in a dangerous situation. COs shall ensure pre-mission planning, and in particular, that changes in missions are properly coordinated to preclude these problems. Normally, cutter CIC or CSC and operations personnel do not possess the expertise or aviation charts to conduct the in-depth planning required, so close coordination with the AVDET is essential.

D. FLIGHT DECK MOTION LIMITATIONS.

1. Overview.

   a. Flight deck motion includes the resulting effect of pitch, roll, list, heave, and yaw. The combined effect of two or more of these forces may produce accelerating forces independent of their individual values that exceed the structural and/or aerodynamic limits of the helicopter.

   b. The pilot shall evaluate overall deck motion before attempting a takeoff or landing. The determination to conduct operations remains a matter of judgment. Where doubt exists, it is better to cancel or postpone the operation in the absence of compelling requirements.

   c. Flight deck motion limits are listed in Appendix B for several specific combinations of helicopters and ships. If limits are not specifically indicated for a particular ship and helicopter combination, the general limits shown in Figure B-1 shall apply.

WARNING

LANDINGS OF NON-TALON OR NON-ASIST CAPABLE AIRCRAFT REQUIRE EFFICIENT COORDINATION BY THE FLIGHT DECK CREW TO RAPIDLY SECURE THE AIRCRAFT WHILE OPERATING NEAR OR AT MAXIMUM FLIGHT DECK MOTION LIMITATIONS LISTED IN Appendix B.

2. Pitch and Roll. Most flight deck motion is caused by the movement of a vessel about the pitch and roll axes. The motion causes the plane of the landing surface to constantly change in relation to the helicopter, making landing and takeoffs more difficult. Bubble-type clinometers, installed on the Bridge or the Helicopter Control Station (HCS), shall be used to measure pitch and roll (used to establish limits). Clinometers shall be illuminated for nighttime operations.

CAUTION

IF THE MOTION IS SUFFICIENTLY SEVERE, PARTS OF THE AIRFRAME SUCH AS THE TAIL, HORIZONTAL STABILIZER, LATERAL FINS, ETC. CAN COME IN CONTACT WITH THE DECK, CAUSING SEVERE DAMAGE AND POSSIBLE INJURY TO PERSONNEL.

NOTE

For helicopter operations, roll is measured from the vertical and shall be read directly from the clinometer. Digital readouts shall not be used as the primary measurement. Reported roll is equal to the maximum bubble reading on the inclinometer.

3. List. Whenever possible, a vessel's list should be eliminated before helicopter landing or takeoff. During operations with no visual horizon, list can cause the pilot(s) to suffer from vertigo (spatial disorientation). Ballasting as a means to reduce or eliminate list should be considered prior to conducting flight operations. Ballasting may exacerbate list dependent upon environmental conditions present at the time flight operations are conducted, limiting launch and recovery course options. List shall be reported for advisory purposes only and shall include the side to which the cutter is listing. For example, the HCO reports, "PITCH 2, ROLL 4, LIST 2 DEGREES TO STARBOARD."

WARNING

LIST CAN BE A MAJOR CONTRIBUTOR TO HELICOPTER DYNAMIC ROLLOVER. WIND INDUCED HEEL AND THE RESULTING TEMPORARY LIST OF THE FLIGHT DECK CAN BE A CONTRIBUTOR TO HELICOPTER DYNAMIC ROLLOVER AND SHOULD BE CONSIDERED.

4. Dynamic Rollover. Dynamic rollover occurs when forces combine to cause a helicopter to roll over on its side. As its name implies, the condition occurs when the helicopter's rotor head is turning and only when part of the landing gear is in contact with the surface or some other fixed obstruction, providing a pivot point around which a rolling moment can be generated. It can occur on land or on a ship, but is more likely to occur on a ship because of its motion.

   a. Factors. Once a pivot point is established, a rolling moment can be generated through the combination of lateral forces generated by any of the following factors. The greater the lateral forces, the larger (faster) the rolling moment:

      (1) Lateral movement of the flight deck.

      (2) Cutter's roll angle and rate of roll.

      (3) Cutter's list.

      (4) The crosswind component of relative wind.

      (5) Application of collective pitch.

      (6) Tail rotor thrust.

      (7) Unequal extension of the helicopter's main landing gear struts.

      (8) Unequal servicing of the helicopter's main landing gear tires.

      (9) Unequal fuel, cargo, or personnel loading which may change the lateral center of gravity of the helicopter.

(10) Pilot management of flight controls during takeoff; especially, allowing the helicopter to drift laterally, using excessive pedal inputs, or making unusually abrupt or untrimmed control movements.

b. Prevention of Dynamic Rollover. The most effective way of preventing dynamic rollover is to reduce or eliminate as many lateral forces as possible, especially if they are cumulative toward one side (e.g., relative wind from the port side, cutter's list to starboard, helicopter's right strut under serviced). During takeoff or landing, the helicopter must be hovered at an altitude which provides adequate clearance from the flight deck before it moves laterally (or the flight deck moves laterally), especially when the cutter has a relative large amount of pitch and heave. Subsequent to a successful takeoff or landing, if a wheel makes contact with the flight deck, a raised deck obstruction, or the deck edge coming, while moving laterally, the helicopter could enter dynamic rollover.

WARNING
THE RISK OF DYNAMIC ROLLOVER IS INCREASED WHEN NOT USING A RAPID SECURING DEVICE

5. Heave and Yaw.

a. Heave and yaw can have an adverse effect during takeoff and landing and shall be taken into account when evaluating deck motion.

(1) Heave is the vertical displacement of the vessel independent of movement about the pitch axis.

(2) Yaw is the lateral displacement of a vessel independent of the roll axis.

b. Combinations of heave and yaw results in a figure-eight motion of the flight deck that can seriously complicate the timing of touchdown or takeoff. Both are unpredictable and can cause helicopter structural damage during landing even though pitch and roll are within limits.

E. WEATHER CONSIDERATIONS AND LIMITATIONS.

1. Overview. Existing and forecast weather may be a limiting factor in ship-helo operations. Wind, coverage and thickness of cloud layers, visibility, temperature, sea state, precipitation, and distance to a suitable alternate landing site shall be considered in determining if the mission will proceed and whether the flight will require one or two pilots.

2. Wind.

a. Wind direction and velocity have a significant effect on helicopter performance.

b. True wind affects the helicopter's groundspeed over the route of flight.

c. Relative wind affects the efficiency of the helicopter's rotor system. Excessive relative wind velocity can produce turbulence downwind of the vessel's superstructure. It can also be hazardous while engaging or disengaging the helicopter's rotor system and folding, unfolding, or removing or installing the helicopter's rotor blades. Relative wind envelopes for specific ship and helicopter combinations are shown in Appendix B. A general launch and recovery envelope is provided in the absence of a specific envelope as shown in Appendix B.

d. Whenever possible, a course should be steered that produces the best combination of relative wind and flight deck motion.

WARNING

ATTEMPTS TO TAKEOFF OR LAND WITH RELATIVE WIND BEYOND ESTABLISHED LIMITS MAY RESULT IN ABRUPT, EXCESSIVE, AND UNCONTROLLABLE HELICOPTER YAW, PITCH, OR ROLL, AND/OR LOSS OF ALTITUDE. ATTEMPTS TO ENGAGE THE ROTOR SYSTEM IN EXCESSIVE WINDS MAY RESULT IN ROTOR BLADES CONTACTING THE FUSELAGE OR DECK.

CAUTION

RELATIVE WIND, PITCH, AND ROLL SHALL BE MONITORED FREQUENTLY DURING TAKEOFF AND LANDING EVOLUTIONS. SIGNIFICANT CHANGES SHALL BE REPORTED TO THE HELICOPTER. THE HCO IS RESPONSIBLE FOR ENSURING THAT LIMITS ARE NOT EXCEEDED.

3. Ceiling and Visibility. The ceiling and visibility minimums above which a cutter may conduct ship-helo operations are dependent on the cutter certification and qualification level. Cutters certified and qualified for Level III shall only conduct day operations in VMC. Those certified and qualified for Level II shall only conduct day and night operations in VMC. Cutters possessing Level I certification and qualification may conduct day and night operations in VMC or IMC.

a. VMC versus IMC. For purposes of this Manual, a ceiling (defined as the cloud base height of the lowest layer of clouds affecting more than 50 percent of the sky in the operating area) of 500 feet and visibility of 1 mile (500/1) are considered the minimum conditions which will allow Level II or III (VMC) operations. Ceilings and visibility of less than 500/1 require Level I (IMC) operations, except in cases of national defense, emergency, or where the saving of life is probable.

b. Reduced Weather Operations. Coast Guard helicopters working only with Coast Guard Cutters may lower the Level III ceiling limits for advisory control to 300 feet with visibility remaining at 1 mile or greater (300/1), while remaining clear of clouds. Routine operations to these lower levels are dependent on aircraft mechanical status, a risk assessment, and approval of both the CO and Senior Aviator.

c. Reduced Weather Operations. The criteria for each operational category are set forth in Table 5-1 and shall apply to all Coast Guard ship-helo operations. See Chapter 7 for additional information on operations below 500/1.

NOTE

Two pilots are required if any portion of the flight is to be conducted before sunrise or after sunset, or daytime operations when the current or forecast weather is less than a 500 foot ceiling and three miles visibility (see Chapter 2, Table 2-2).

4. Weather Observations and Reports. Accurate weather observations and timely reports are extremely important to the safe conduct of any flight operation. A helicopter operating with a cutter depends on local observations taken on the cutter and on forecasts available via communications with shore based or other afloat reporting facilities.

Table 5-1. MINIMUM CEILING AND VISIBILITY CRITERIA

Type of Operation	Ceiling	Visibility
Level I (Dual Pilot)	200 feet	½ mile
Level II/III (Dual Pilot)	500 feet	1 mile (Note 1, 2, and 4)
Training (Dual Pilot)	500 feet	3 miles (Note 4)
Single Pilot	500 feet	3 miles (Note 3)
Maintenance	1000 feet	3 miles
National Defense or Urgent SAR	NO ESTABLISHED LIMITS (Note 1)	

Notes:

1. Operations to Level I minimums are allowed aboard Level II/III certified and qualified cutters for missions where the saving of life is probable. Guidance contained in Chapter 1, Paragraph 1.E.2., applies.
2. For CG helicopters working with CG cutters only and depending on the helicopter's mechanical status and approval of both the PIC and cutter CO, Level II/III ceiling limits may be lowered to 300 feet with visibility of at least 1 mile (300/1).
3. Requires Aircraft Commander or First Pilot.
4. NVG operations shall be conducted in VMC (i.e., a discernible/visible horizon). NVGs may be used in determining the presence of a visible horizon. U.S. Navy NVG operational minimums may be more restrictive.

a. Weather Planning Observations. When a rendezvous with a helicopter is planned, the cutter should provide the following on-scene information to the PIC before the departure of the helicopter for the cutter.

(1) Height of lowest cloud base layer and percent of sky coverage.

(2) Horizontal visibility.

(3) Wind direction and velocity. Velocities sustained for less than 1 minute should be reported as gusts.

(4) Barometric pressure in inches of mercury (i.e., 29.92).

(5) Air and water temperature.

(6) Maximum pitch and roll on selected recovery heading.

(7) Status of flight following radar.

(8) Status of flight deck lighting (night operations).

(9) Present latitude, longitude, intended course, and SOG.

(10) Frequencies, EMCON, and lost communications procedures.

(11) Other air and surface assets.

(12) Status and frequency of the Tactical Air Navigation (TACAN)/Distance Measuring Equipment (DME).

(13) Latitude and longitude coordinates of rendezvous point.

(14) Discernible or visible horizon (NVG operations).

(15) Moonrise/moonset/moon phase (night operations).

(16) Any remarks or noteworthy atmospheric phenomena.

CAUTION

THE PILOT SHALL RECEIVE REAL-TIME WEATHER INFORMATION, EVEN IF EMCON PROCEDURES MUST BE RELAXED TO PASS THE INFORMATION. A DECISION TO FLY IN CONDITIONS THAT ARE LESS THAN OPTIMAL SHALL BE TEMPERED WITH SOUND JUDGMENT AND ERR ON THE SIDE OF SAFETY.

b. Current Weather Observations. During ship-helo operations when the helicopter is not within visual range of the cutter, bridge personnel shall monitor weather and sea conditions, keeping the helicopter pilot and the Combat information Center (CIC) or the Combat Support Center (CSC) informed of any significant changes. CIC or CSC personnel shall be prepared to provide the helicopter with range and magnetic course to the cutter or nearest suitable landing site whenever it appears that weather may become a factor.

c. Pre-Departure Weather Observations. Before the helicopter departs to another cutter or a shore-landing site, the cutter shall ascertain the existing and forecast weather at destination, and at an alternate destination if required or desired by the PIC. For purposes of this requirement, destination is defined as the first point of intended landing.

F. HELICOPTER AND AIRCREW LIMITATIONS.

1. Overview. To enhance the effectiveness of the ship-helo team, certain helicopter and aircrew limitations must be understood and applied.

2. Helicopter Limitations. Each type of helicopter has different characteristics and limitations. Cutter Commanding Officers shall posses a basic knowledge of these limitations as a basis for risk analysis and mission planning. A listing of Coast Guard helicopter operating features and limitations is provided in Appendix E. Information on Navy helicopters can be found in NAVAIR 00-80T-122 (series).

3. Aircrew Use. Certain limits have been placed on the flight hours that may be accumulated by aircrews. There are limits established for daily, weekly, monthly, and yearly periods. Aircrews shall receive off-duty time after exceeding certain flight time and/or crew mission hours. Specific mandatory rest and flight time limitations are established in the Coast Guard Air Operations Manual, COMDTINST M3710.1 (series). The definitions of duty and crew mission time in the following paragraphs apply to aviation personnel deployed or embarked aboard a cutter.

   a. Duty. A person is on duty when engaged in the performance of any official Coast Guard business to include cutter work, maintenance, or flight related duties. This includes time subject to immediate recall for aircrew or other assignment.

   b. Crew Mission Time. Crew mission time commences and accrues IAW the guidelines established in the Coast Guard Air Operations Manual, COMDTINST M3710.1 (series).

G. COMMUNICATIONS AND NAVIGATION.

1. Overview. A complete communications network is an essential element of effective operations. Operations with less than a complete communications network shall be limited to urgent missions approved by the CO and PIC, and conducted with caution.

2. Voice Communications. Voice communications shall be operational during any FLICON.

   a. Cutter Internal Communications.

      (1) During FLICON ONE, THREE, FOUR, and FIVE communications shall be established and maintained on the bridge, on the flight deck, and in CIC or CSC (and at the AFFF and flight control stations).

      (2) Primary communications are generally conducted on VHF-FM. When VHF-FM cannot be used or is not desired, sound powered phones may be used.

      (3) For FLICON FOUR and "hot refueling" evolutions, communications with the JP-5 pump room and helicopter fueling station shall also be established.

(4) During helicopter static refueling, communications shall be established on the bridge or HCS, on the flight deck, in the JP-5 pump room, and at the refueling stations. If sound powered telephones are used, all stations shall be connected on the same circuit.

(5) The 1MC is used to transmit both general and emergency information during any FLICON.

b. Cutter External Communications.

(1) Primary external communications between the HCO or CIC and/or CSC and the helicopter are conducted via radio using the appropriate UHF, VHF-AMT, or VHF-FM frequencies.

(2) When communications cannot be carried out via line of sight or short-range frequencies, communications should be carried out on appropriate high frequency single side band (HF-SSB) or HF-AM frequencies (subject to NAVAIR certification restrictions).

(3) Primary, secondary, and tertiary frequencies, as well as any special communications procedures shall be determined IAW the appropriate section of the Spectrum Management Policy and Procedures, COMDTINST M2400.1 (series).

(4) Radio frequencies and any mission-specific procedures shall be briefed between the helicopter crew and CIC or CSC or the HCO before each flight or for flights not originating on the cutter, upon initial radio contact.

c. Helicopter External Communications. Aircraft transmissions on VHF-FM are limited to 3000 feet above ground level (AGL) or lower, as set forth in appropriate directives and Chapter 15 of the Telecommunications Manual, COMDTINST M2000.3 (series). This restriction shall be observed in all but emergency situations.

3. Visual Signals. Visual signals are used during ship-helo operations to provide a secondary means of communication between the HCO and the flight deck, between the cutter and the helicopter, and between vessels.

a. Day Shapes and Navigational Lights. The “vessel restricted in ability to maneuver” day shapes and lights are shown during flight operations.

b. HOTEL Flag. The ATP-1 tactical signal HOTEL flag is displayed when conducting flight operations in company with other U.S. and NATO vessels. Refer to Appendix C for more information.

c. Deck Status Light . The deck status light is controlled by the HCO to provide the pilot with a visual cue for start engine, engage rotors, takeoff, landing, HIFR, VERTREP, and rotor shutdown clearances. Refer to Appendix C for more information.

CAUTION

DECK STATUS LIGHT SHALL NOT BE USED DURING NIGHTTIME OPERATIONS UNLESS PRE-BRIEFED FOR EMCON COMMUNICATIONS WITH THE CONCURRENCE OF THE PIC AND CO.

d. LSO Signal Devices. Refer to Appendix C for LSO signals.

(1) Launch/Recovery and VERTREP Signals. Barehanded signals are used in daytime (gloves may be worn). Blue/green lighted wands or Chemlights are used for nighttime operations.

(2) HIFR Signals. DAYTIME: Red and green devices (flags or paddles) are used.

NIGHTTIME: Green wand will indicate “THE PUMP IS ON” and extinguishing the green wand will indicate “THE PUMP IS OFF.”

(3) Nighttime Signal Devices. All signaling devices used for nighttime operations shall be NVG compatible and shall be tested for compatibility with NVGs. Devices include but are not limited to:

(a) Blue or green Chemlights, traditional or battery powered affixed externally to all personnel on the flight deck during night operations.

(b) Blue NVG filter inserts for flashlights or wands, and cones masked with four vertical slits

(c) Infrared chemlights are NOT approved for shipboard operations.

e. Waveoff Lights. The waveoff lights may be activated by the HCO. They provide the pilots with a visual signal to abort an approach or landing.

WARNING

THE WAVEOFF LIGHTING SYSTEM SHALL NOT BE ENERGIZED DURING NIGHTTIME OPERATIONS.

f. LSO and Pilot Hand Signals. The LSO and pilot hand signals, as depicted in Appendix C, are the primary method of communication between the LSO and the helicopter during all flight deck evolutions. Lighted wands are used at night.

WARNING

ALL SIGNALS FROM THE LSO TO THE HELICOPTER ARE ADVISORY, WITH THE EXCEPTION OF WAVEOFF, EMERGENCY BREAKAWAY, AND HOLD SIGNALS, WHICH ARE MANDATORY.

CHAPTER 6. LAUNCH AND RECOVERY PROCEDURES.

A. INTRODUCTION. The procedures set forth in this chapter are for operations involving Coast Guard cutters and Coast Guard helicopters. Operations with elements of other services or nations may require modification of these procedures. Procedures relating solely to other types of ships or helicopters are noted as such.

B. IN THIS CHAPTER. This chapter discusses the following topics:

1. Cutter Preparation.
2. Flight Quarter Conditions.
3. Flight Quarters Billet Responsibilities.
4. Engine Start and Rotor Engagement.
5. Launch Procedures.
6. Traffic Pattern.
7. General Recovery Procedures.
8. Shutdown Phase.
9. Post-Shutdown.
10. Waveoff.
11. Oblique (Angled) Lineup Line Operations.
12. Athwartship Operations.
13. Nighttime Operations.

C. CUTTER PREPARATION.

1. Overview. The cutter should prepare for helicopter operations sufficiently in advance of launch or recovery to ensure readiness before arrival or departure of the helicopter. If a deficiency is discovered during preparations that will delay achieving readiness, the PIC or the controlling activity shall be notified by the most expeditious means.

2. Safety Precautions. The following precautions shall be observed when operating with helicopters:

   a. The WAVEOFF, HOLD, and EMERGENCY BREAKAWAY Signals are mandatory and shall be executed immediately.

   b. Except in cases of emergency, pilots shall not disengage rotors or stop engines without proper signal from the LSO.

   c. Helicopters shall not be launched or recovered nor shall rotors be engaged or disengaged while the ship is turning.

   d. Personnel required to be in the area of helicopters that are disengaging rotors shall stand within arm’s length of the aircraft, or well outside the rotor arc.

   e. Helicopters shall never be towed or pushed while rotors are engaged or while the ship is turning.

f. On cutters carrying more than one helicopter, spotting of the next helicopter for launch shall be delayed until an OPERATIONS NORMAL report has been received from the helicopter launched first.

g. Helicopters shall not be ground taxied on the flight deck, repositioning a helicopter under power shall only be accomplished by hover taxi.

h. When changing pilots or hot refueling, the aircraft shall have the tiedowns attached or have TALON engaged.

i. Aircraft shall be chocked (minimum) for passenger loading and unloading when a cutter is moored pier side or hove to in the ice. Underway cutters shall use TALON or primary tiedowns before transferring passengers.

j. While the rotor is turning, TD1A chains shall NOT be attached to any mooring rings other than those on the landing gear. Chains attached to the fuselage with the rotor turning may cause ground resonance.

k. During nighttime, IMC, or demanding takeoff conditions, no radio transmissions shall be made to the helicopter for at least 1 minute after takeoff or until an “Operations Normal” report is received.

l. Pedal turns over the flight deck shall not be conducted on takeoff unless prebriefed and the cutter is hove to in the ice or moored pier side.

m. Personnel on the flight deck during flight operations shall be limited to those essential to the evolutions in progress.

3. Operations Department. The following are duties of the Operations Department.

a. Conduct mission planning session (Chapter 5).

b. Advise affected personnel of future flight operations.

c. Conduct preflight briefing (Appendix H).

d. Determine optimum course and speed for the planned operation.

e. Make weather observations (Chapter 5).

f. Tune and test all communications, navigation (TACAN), and flight following equipment.

g. If requested, energize the SGSI (night and/or IMC).

h. Check operation of the FDVS including date-time generator and recording system. FDVS requirements discussed in Chapter 4.

i. Designate the ready boat.

j. Conduct foreign object damage (FOD) walk down of all weather decks above the flight deck. Ensure all containers on fantail are secured.

k. Break out day shapes and HOTEL flag.

l. Report completion and any deficiencies to the OOD.

4. Engineering Department. The following are duties of the Engineering Department:

a. Ensure proper operation of the JP-5 aviation fuel system.

b. Conduct tests of JP-5 aviation fuel and report results to the HCO.

c. Energize fire pump and align AFFF system for flight operations.

d. Break out fire fighting and crash rescue equipment (Chapter 14).

e. Ensure that helicopter starting power is available, if required.

f. Report completion and any deficiencies to the OOD.

5. Deck Department. The following are duties of the Deck Department:

a. Secure all weather doors and hatches.

(1) WMEC 210: Aft of frame 90.

(2) WMEC 270: Aft of frame 103.

(3) WMEC 282: Aft of frame 25.

(4) WHEC 378: Aft of frame 190.

(5) WAGB 399: Aft of frame 141.

(6) WMSL 418: Aft of frame 52.

(7) WAGB 420: Aft of frame 96.

b. Fully retract hangar and close hangar door.

c. Inspect, lower, and check the security of the safety nets or catwalks including flight deck net pins attached to a wire lanyard.

d. Lower or remove flight deck lifeline stanchions.

e. Remove maintenance floodlights, if installed.

f. Lower flagstaff.

g. Remove canvas covers from all equipment (including the Close in Weapons System (CIWS)) in the immediate vicinity of flight deck. Check that all other covers are securely lashed.

h. Remove all gasoline stored within 25 feet of the flight deck peripheral marking that is exposed on any weather deck.

i. Conduct FOD walk down of the flight deck and fantail. Remove or securely tiedown any objects that may become airborne from the helicopter rotor wash. Wash down the flight deck and fantail, if necessary.

j. Assist AVDET with the helicopter traversing and preparation for launch, if applicable.

k. Prepare the ready boat for lowering (the ready boat SHALL be placed at the rail or launched). If the only ready boat is located on the fantail, it SHALL be launched before commencing flight operations. If an alternative rescue resource is immediately available, the CO may waive this requirement. Shipboard pickup by the launching cutter does not meet the requirement of an alternate rescue source.

l. Check all lighting and visual approach equipment including waveoff lights for proper operation.

m. Report completion and any deficiencies to the OOD.

6. Aviation Department. The following are duties of the Aviation Department:
   a. Assist in development of mission plan (Appendix H).
   b. Participate in preflight briefing (Appendix H).
   c. Ensure that the helicopter is ready for flight.
   d. Assign and brief the flight crew. If necessary for safety of helicopter and/or aviation equipment, supervise retraction of the hangar and/or opening and closing of the hangar door.
   e. Supervise traversing of the helicopter.
   f. Review daily aviation fuel testing results.
   g. Report completion and deficiencies to the OOD.
7. Preflight Briefing.
   a. A mission briefing shall be conducted before setting flight quarters. One or both pilots, the Operations Officer, the HCO, LSO, the CICO (or ADC), flight briefer, and an engineering representative should be present.
   b. The briefer shall fill out a Flight Planning Sheet and a Preflight Briefing Sheet, which shall be reviewed at the briefing. Cutters may generate a custom planning or briefing sheet that shall contain at a minimum the items depicted in Table H-1 and Table H-2.
   c. The HCO shall finalize the flight planning sheet after setting FLICON ONE and deliver it to the pilot via messenger or by radio.

D. FLIGHT QUARTERS.

1. Conditions. Upon completion of required preparations, any of five conditions may be set, depending on the planned operation.
   a. Flight Quarters Condition One (FLICON ONE). FLICON ONE shall be set for launch and recovery.
      (1) Specific procedures for launch and recovery operations can be found later in this chapter and shall be thoroughly reviewed before commencing operations.
   b. Flight Quarters Condition Two (FLICON TWO). FLICON TWO may be set when an immediate takeoff or landing is not planned, or when the helicopter is secured on deck for a short period, such as during a meal break.
      (1) FLICON TWO should be sequential to FLICON ONE when a lesser readiness posture is acceptable, allowing personnel to stand down with equipment remaining ready. FLICON ONE shall be attainable from FLICON TWO within 5 minutes.
      (2) Normal helicopter control is from CIC during FLICON TWO.
      (3) FLICON ONE is normally maintained for 5 minutes after the departure of the helicopter before the setting of FLICON TWO. This is to allow for the rapid recovery of the helicopter in the event of an inflight emergency.

c. Flight Quarters Condition Three (FLICON THREE). FLICON THREE shall be set for VERTREP operations using the cargo sling. See FLICON FIVE for hoisting operations.

(1) To attain FLICON THREE, set FLICON ONE with the following variations:

(a) Members of the tiedown crew shall be designated as the hookup crew:

[1] One grounding wand handler, as needed.

[2] Two hookup personnel (one to hook up the load and one to act as safety/backup).

(2) Specific procedures for VERTREP operations are in Chapter 10 and shall be thoroughly reviewed before commencing operations.

d. Flight Quarters Condition Four (FLICON FOUR). FLICON FOUR shall be set for HIFR operations. To attain FLICON FOUR, set FLICON ONE and the helicopter refueling detail with the following variations:

(1) The tiedown crew shall act as hookup crew and fuel hose handlers on the flight deck.

(2) The JP-5 pump room shall have direct communications with the bridge. Depending upon the location of the pump room, this may be accomplished via radio or by sound powered phone circuit.

(3) Specific procedures for HIFR operations are in Chapter 9 and shall be reviewed thoroughly before commencing operations.

e. Flight Quarters Condition Four (FLICON FIVE). FLICON FIVE shall be set for hoist operations, and special missions, including vertical insertion (VI) and Aviation Use of Force (AUF) judgemental scenario training.

(1) To attain FLICON FIVE, set FLICON ONE with the following variations:

(a) The Landing Signal Officer (LSO) shall complete the following responsibilities:

[1] Inspect the mission area, which is the area intended for hovering operations (flight deck, fantail, bow, and/or other prebriefed areas) for FOD and loose gear.

[2] Clear ALL personnel from the mission area.

[3] Report any delays in attaining readiness to the HCO.

[4] When complete, report readiness to the HCO: “MISSION AREA READY.”

(b) Tiedown Crew (two members with grounding wand may be needed for hoist operations).

(c) Onscene Leader (OSL).

(d) Hose Team(s).

(e) Rescue Crew.

(f) Foam Machinery and/or Fire Monitor Crew.

(g) NVG Safety Officer (NSO).

(2) Specific procedures for Special Mission operations are located in Chapter 15 and shall be thoroughly reviewed before commencing operations.

NOTE

FLICON FIVE is appropriate for special mission training in isolation only. If other evolutions such as launch/recover, HIFR, or VERTREP are anticipated, then the specific FLICON for that operation shall be accomplished.

E. FLIGHT QUARTERS BILLET RESPONSIBILITIES. The following specific actions shall be accomplished in preparation of and upon setting FLICON ONE, in addition to any special requirements of the mission, cutter, or helicopter:

1. Officer of the Deck (OOD).

a. Request permission from the CO to set flight quarters.

b. Set flight quarters. Order the smoking lamp out on all weather decks. Hoist day shapes and HOTEL flag, as appropriate.

c. Report completion of required preparations to HCO and CO.

d. Maneuver cutter to appropriate heading and speed, as recommended by the HCO. A port relative wind is preferred for H-65 operations. Refer to Appendix B for relative wind and ship motion operating envelopes.

e. Report the readiness of the rescue boat crew or alternate rescue resource to the HCO. Launch the rescue boat, as required.

f. Maintain heading and speed during landings, takeoffs, when the helicopter is not secured on deck, and when the rotor is turning at less than 100 percent (deck status light at AMBER). If it becomes necessary to maneuver the ship, advise the HCO immediately.

WARNING

IT IS CRITICAL THAT THE CUTTER MAINTAINS A STEADY HEADING AND SPEED WHILE IN "AMBER" DECK STATUS. ANY CHANGES IN THE CUTTER HEADING AND/OR SPEED DURING ROTOR ENGAGEMENT OR SHARP CHANGES IN HEADING RESULTING IN SHIP HEEL GREATER THAN 10 DEGREES MAY CAUSE EXCESSIVE ROTOR BLADE DEFLECTION, RESULTING IN A BLADE STRIKE TO THE AIRFRAME.

CAUTION

CHANGES IN THE CUTTER HEADING OF MORE THAN A FEW DEGREES WHILE THE HELICOPTER IS ON DECK WITH THE ROTOR AND STABILIZATION EQUIPMENT ENGAGED MAY CAUSE LARGE TAIL ROTOR CONTROL INPUTS, RESULTING IN OVERSTRESS OF THE TAIL SECTION OR OTHER AIRCRAFT DAMAGE.

NOTE

The OOD and HCO roles may be filled by the same crewmember when the cutter is moored pier side or hove to in the ice as long as the OOD is a qualified HCO.

2. HCO.

   a. Man the Helicopter Control Station (HCS).

   b. Initiate and complete the HCO checklist found in Appendix H.

NOTE

Cutters may generate their own HCO checklist. However, as a minimum, ship-generated checklists must contain ALL items listed on the HCO checklist found in Appendix H.

   c. Be familiar with the safety precautions in this chapter.

   d. Receive all COMMS checks and readiness reports via radio or phone talker.

   e. Provide the OOD with recommended heading and speed for the operation.

   f. Supervise preparation of HCO phone talker (if used), including a communications check.

   g. Illuminate the RED deck status light, except during nighttime operations.

   h. Energize appropriate flight deck lighting and/or visual approach equipment for nighttime and/or IMC operations.

   i. Once cutter is on desired heading, verify that flight deck motion and wind are within limits specified in Appendix B.

   j. Ensure that all necessary communications, navigation (TACAN), and flight following equipment are energized.

   k. Ensure that the FDVS and video recording equipment are energized and operational with a date-time display to record all phases of flight operations. Refer to Chapter 4 for FDVS operational requirements.

   l. If a helicopter is onboard, have LSO ensure that strut collars and secondary tiedowns have been removed.

m. When the cutter is ready for helicopter launch or recovery, request permission from the CO to commence flight operations.

NOTE

The cutter CO grants permission to commence flight operations. Following this initial clearance, the CO may delegate control of actual flight operations, including flight and landing clearances, transition between FLI-CONs, and clearance changes, to the HCO. The cutter CO is not required to approve each individual or set of evolutions.

n. Verify that the cutter is maintaining constant heading and speed before authorizing engine start and rotor engagement. Signal clearance by illuminating the AMBER deck status light, except during nighttime operations.

o. Provide the helicopter with the numbers recorded on a Preflight Briefing Sheet (Appendix H) via a messenger or by radio. At a minimum, the following information should be included in the numbers:

(1) Cutter certification level and class, qualification level, and any applicable waivers.

NOTE

Certification, qualification, and waivers should only be passed on initial aircraft check-in and is not necessary when passing subsequent "numbers" to the same aircraft and crew as long as the certification, qualification, and waivers have not changed.

NOTE

The cutter’s qualification level may not always match the cutter’s certification level (ie., cutter my be certified for Level I but qualified for Level II operations).

(2) Cutter magnetic heading and speed. In polar regions, it may be preferred to express headings in degrees true.

(3) Cutter position (latitude and longitude).

(4) Magnetic wind direction and velocity. In polar regions, it may be preferred to express headings in degrees true.

(5) Relative wind direction and velocity.

(6) Current maximum pitch and roll and appropriate amplifying information, such as occasional excursions or existing list or heel.

NOTE

For helicopter operations, pitch and roll are measured from the vertical and shall be read directly from the inclinometer. Report the maximum pitch and roll value over a period of observation as read for the center of the bubble.

NOTE

For determining pitch and roll limits, occasional shall be defined as a span of time sufficient for a pilot to safely execute an approach and landing in the period between excursions. The use of occasional is only authorized between sunrise and sunset.

NOTE

The use of occasional is prohibited on Legend Class cutters without use of rapid securing device.

(7) Altimeter setting in inches of mercury (i.e., 29.92). Read back of altimeter setting is required from the pilot. If the helicopter is on the flight deck, recommend cross checking between altimeters and against deck elevation.

p. Ensure an accurate navigational plot of the position of the helicopter is maintained (Chapter 7).

q. Monitor relative wind, pitch, and roll frequently during takeoff and landing evolutions. Significant changes shall be reported to the helicopter. The HCO is responsible for ensuring that limits are not exceeded. Pitch and roll shall be reported IAW with Chapter 5.

3. Landing Signal Officer (LSO).

a. Be familiar with the safety precautions in this chapter.

b. Ensure that all required equipment is ready.

c. Ensure that all flight deck personnel are in position and properly outfitted in protective gear. For nighttime operations, ALL flight deck, the LSO, NVG Safety Officer (NSO), and tiedown personnel shall wear a blue or green chemlight or other NVG compatible light securely fastened to the life preserver unit (LPU).

d. Inspect the flight deck and fantail for FOD and loose gear.

e. Clear all nonessential personnel from the flight deck area.

f. Ensure that strut collars and secondary tiedowns have been removed from the helicopter, and report completion to the HCO.

g. Remove the TALON grid cover as appropriate.

NOTE

The TALON grid cover shall be removed before operations with a TALON-equipped aircraft and should be installed at all other times to ensure nonskid and visual landing aid integrity.

h. Report “FLIGHT DECK MANNED AND READY” to the HCO via radio:

(1) (Helicopter onboard) “SECONDARY TIEDOWNS REMOVED, REQUEST PERMISSION TO START ENGINE(S) AND ENGAGE ROTORS.”

(2) (No helicopter onboard) “FLIGHT DECK CLEAR.”

4. Night Vision Goggle Safety Officer (NSO).

   a. The NSO is required during nighttime operations when qualifying an NVG LSO or whenever an NVG LSO conducts NVG aided operations. The NSO is responsible for monitoring the safety of operations. When needed, the NSO shall be stationed on the flight deck adjacent to the LSO and be equipped with ANVIS style NVGs. The NSO helmet shall be capable of hard mounting the NVGs and have two-way communications capability with the HCO, LSO and aircraft at all times. The NSO shall be qualified as an NVG LSO and act as the training officer during initial qualification for NVG LSOs.

   b. Report readiness to the LSO.

NOTE

The NSO is not required aboard LEGEND Class cutters and CGC HEALY since HCO has unobstructed view of the flight deck.

5. Tiedown Crew.

   a. Break out and don appropriate protective gear. For nighttime operations, tiedown personnel shall wear a blue or green chemlight or other NVG compatible light (blue or green) securely fastened to the LPU.

   b. Break out, install, and/or overhaul primary tiedown assemblies, as appropriate.

   c. Report readiness to the LSO.

6. Rescue Boat Coxswain.

   a. Muster boat crew and cutter swimmer. Swimmer should be dressed out. With the approval of the Commanding Officer, the swimmer may stage with boat crew and not fully dress out if weather and duration of flight operations would cause excessive fatigue.

   b. As sea state dictates, inspect equipment and prepare ready boat for launching.

   c. Report readiness to OOD.

   d. Maintain readiness posture IAW Chapter 2, Table 2-1, or Helicopter Operations Bill.

7. CIC Air Direction Controller (ADC)/Flight Follower.

   a. Report readiness to the HCO.

   b. Maintain radar, Identification Friend or Foe (IFF), and/or dead reckoning (DR) plot of the helicopter as appropriate. Report ALL radar deficiences to the HCO.

   c. Provide communications interface, navigational assistance, and other flight following functions as directed by the HCO and/or Combat Information Center Officer (CICO) in conditions other than Level I.

d. Provide air traffic advisories for the helicopter using procedures set forth in Chapter 7.

NOTE

On WAGB class cutters, the HCO shall assume the responsibilities of flight follower.

8. Onscene Leader (OSL).

   a. Designate flight deck fire hoses to use and verify necessary fire pumps are on line and the AFFF system is ready.

   b. Ensure all fire fighting and rescue personnel possess the appropriate protective gear.

   c. Supervise attaching appropriate nozzles and faking out hoses. Primary and secondary hoses shall not be pressurized unless required for use.

   d. Ensure all flight deck fire fighting and rescue personnel are staged on the forecastle or inside the cutter forward of and accessible to the flight deck area. Fire fighting and rescue personnel shall be in a position to hear and rapidly respond to the helicopter crash alarm.

   e. Report readiness to the LSO.

9. Hose Team.

   a. Don appropriate protective gear.

   b. Check equipment, fake out hoses, and verify nozzle settings.

   c. Stage in the appropriate space IAW the Helicopter Operations Bill. If stationed in the interior of the ship during nighttime flight operations, the hose team shall stage in an area with red or blue interior lights in an effort to preserve night vision capability in the event of a crash.

   d. Report readiness to the OSL.

10. Rescue Crew.

   a. Inspect crash kit and fire extinguishers. For a list of required crash kit tools and components, see Chapter 14.

   b. Inspect and don proximity suit trousers, boots, LPUs, hearing protection, and aviator gloves (flash gloves may be used in lieu of flight gloves). Trouser suspenders shall be placed outside of LPUs. The jackets and hood need not be worn except when actually responding to a flight deck fire.

   c. Stage in the appropriate space IAW the Helicopter Operations Bill. If stationed in the interior of the ship during nighttime flight operations, the rescue crew shall stage in an area with red or blue interior lights to preserve night vision capability in the event of a crash.

   d. Report readiness to the OSL.

NOTE

The rescue crew shall lay out the primary hose and report readiness to the LSO on cutters equipped with flight deck fire monitors when the flight deck fire fighting party is not manned during FLICON ONE.

11. Foam Machinery/Fire Monitor Crew.
    a. Ensure all required equipment is operational.
    b. Verify that the required fire pumps are on line and the AFFF system is energized before commencing flight operations. Secure the same equipment at the conclusion of flight operations.
    c. Assist rescue crew in faking out primary hoses when fire parties are not manned for FLICON ONE.
    d. Report readiness to the HCO.
    e. Requirements for use of a flight deck fire monitor and flight deck foam flooding system are found in Chapter 14.
12. Medical Detail. During normal flight operations, the HS or PA is only required to acknowledge the setting of FLICON ONE to the HCO. However, for a helicopter emergency landing, activation of the helicopter crash alarm, or during FLICON FIVE involving vertical insertion, the HS or PA shall:
    a. Break out and check equipment.
    b. Be prepared to provide triage services in staging area defined by the Helicopter Operations Bill.
    c. Organize and supervise stretcher bearers, as required.
    d. Report readiness to the HCO.
13. Pilot in Command (PIC).
    a. Be familiar with the safety precautions in this chapter.
    b. Ensure that required preflight inspections are complete. This includes the removal of strut collars and secondary tiedowns before the aircrew enters the helicopter.

F. ENGINE START AND ROTOR ENGAGEMENT. The following is the sequence of events and activities required for a helicopter start. Except as noted, it is assumed that FLICON ONE has been set and the HCO has received permission from the CO to commence flight operations.

WARNING

TIEDOWN CHAINS SHALL NOT BE ATTACHED TO ANY MOORING RINGS OTHER THAN THOSE ON THE LANDING GEAR. CHAINS ATTACHED TO THE FUSELAGE WITH THE ROTOR TURNING MAY CAUSE GROUND RESONANCE.

1. Engine Starting and Rotor Engagement.
    a. LSO/HCO verifies that secondary tiedowns have been removed.

b. As soon as the flight deck is manned and ready, the LSO shall contact the HCO: “REQUEST PERMISSION TO START ENGINES AND ENGAGE ROTORS.” The LSO should not wait for complete cutter readiness to request clearance for start.

c. The HCO verifies that the cutter is on steady heading and speed and authorizes start: “PERMISSION GRANTED TO START ENGINES AND ENGAGE ROTORS. AMBER DECK.” The HCO then illuminates the AMBER deck status light, except during nighttime operations, and announces, “AMBER DECK” over the radio.

d. The LSO acknowledges the amber deck status light and clearance, which grants authority to provide DC or AC power to the helicopter, start the engines, and engage the rotors. The engine(s) may be started using the helicopter battery, portable DC power cart, or cutter DC or AC power. Any of these are considered a normal procedure and is the choice of the pilot.

NOTE

H-60 helicopters are equipped with an APU. The APU is used to start the main engines. The APU can be started using either the aircraft battery or the cutter 400 Hz/115 VAC power. An APU start may be completed before AMBER deck but not before the LSO has requested and received permission from the bridge. The hand signals for an APU start are the same as the “START ENGINE(S)” signal with three fingers extended for day and three flashes for nighttime operations.

e. If using the ship’s external power or portable battery cart, perform the following steps:

(1) When ready, the pilot gives the CONNECT GROUND ELECTRICAL POWER SUPPLY signal (see Appendix C) to the flight mechanic.

(2) Flight mechanic installs external power. This may be accomplished during the setting of FLICON ONE.

(3) At pilot’s request, LSO directs energizing of external power.

(4) LSO signals that power is being supplied by returning the CONNECT GROUND ELECTRICAL POWER SUPPLY signal to the pilot.

(5) The pilot confirms that external power is being received.

f. When ready, the pilot gives the READY TO START ENGINE signal to the LSO.

g. LSO returns the START ENGINE signal to the pilot.

h. After engine start using external power, the pilot gives the DISCONNECT GROUND ELECTRICAL POWER SUPPLY signal to the LSO.

i. LSO directs external power to be disconnected and stowed, as appropriate.

WARNING

FOR EXTERNAL POWER STARTS, AVOID DRAGGING THE POWER CABLE ON DECK POSSIBLY DAMAGING THE CABLE AND CREATING SERIOUS ELECTRICAL SHOCK HAZARD. THE POWER CABLE SHOULD NOT BE CONNECTED TO OR DISCONNECTED FROM THE HELICOPTER WHILE ENERGIZED.

CAUTION

THE HANGAR DOOR MAY BE PARTIALLY OPEN DURING ENGINE START TO FACILITATE STOWING OF THE POWER CABLE, BUT SHALL BE FULLY CLOSED PRIOR TO SWITCHING TO GREEN DECK STATUS LIGHT.

NOTE

For helicopter engine starting with ship DC power, if the power unit is equipped with a current limit switch, the switch should be OFF and the current should NOT be limited.

j. If rotor is not already engaged:

(1) The pilot gives the READY TO ENGAGE ROTORS signal to the LSO when ready to engage.

(2) The LSO, after checking that all flight deck personnel are clear, returns the ENGAGE ROTORS signal to the pilot.

NOTE

The rotor will engage immediately upon first engine start for all Coast Guard helicopters. H-65 helicopters have the capability of starting a single engine with the rotor brake engaged for maintenance purposes. This procedure shall be prebriefed prior to engine start.

k. When rotor RPM reaches 100%, the HCO changes to a RED deck status light, except during nighttime operations, and announces “RED DECK” over the radio.

l. The LSO acknowledges the “red deck” status light. The cutter is now free to maneuver as necessary.

2. Helicopter Systems, Equipment, and Communications Checks.

a. Following a successful engine start and rotor engagement, the pilot completes a systems and equipment check.

b. The pilot initiates communications checks on designated frequencies.

c. Following the communications checks, the HCO passes the “Numbers.”

G. LAUNCH PROCEDURES.

1. Takeoff Clearance.

   a. The pilot completes all necessary checks and advises the HCO on primary frequency, “BEFORE TAKEOFF CHECKS COMPLETE, REQUEST PERMISSION TO TAKEOFF TO PORT/STARBOARD/AFT.”

   b. The HCO verifies pitch, roll, and wind are within limits and that complete readiness has been attained, then transmits to the pilot, “YOU ARE CLEARED FOR TAKEOFF TO PORT/STARBOARD/AFT. TAKE SIGNALS FROM THE LSO. GREEN DECK.”

   c. The HCO then illuminates the GREEN deck status light, except during nighttime operations.

   d. The LSO acknowledges green deck status light to the HCO.

2. Takeoff Procedures. Once the pilot is ready and has been cleared for takeoff with a green deck status light, the following procedures are followed.

   a. If primary tiedowns are installed:

      (1) The pilot gives the REMOVE TIEDOWNS signal to the LSO.

      (2) The LSO then gives the REMOVE TIEDOWNS signal to the tiedown crew.

      (3) The tiedown crew removes the tiedowns using the procedures in Chapter 11.

   b. The pilot, after ensuring tiedowns have been removed, gives the READY FOR TAKEOFF signal to the LSO.

   c. The LSO responds with the TAKEOFF signal in the direction authorized by the takeoff clearance.

   d. If TALON is engaged:

      The pilot releases the TALON probe and delays takeoff for approximately 2 seconds after activating the TALON release to allow the probe to lift clear of the grid. The TALON LKD light shall be off before attempting takeoff.

   e. The pilot executes a vertical takeoff to a hover. Maintaining heading alignment with the appropriate flight deck lineup line and keeping the nose of the helicopter behind the forward peripheral line, the pilot verifies aircraft performance then slides the helicopter clear of the cutter into a position where a normal transition to forward flight, instrument takeoff, or box pattern can be initiated.

   f. When applicable, the LSO gives the “INSTALL/OVERHAUL TIEDOWNS” signal to the tiedown crew after the helicopter is clear of the cutter and has begun transition to forward flight, Instrument Takeoff (ITO), or box pattern.

   g. The HCO illuminates the RED deck status light and announces, “RED DECK” over the communication circuit when the helicopter clears the flight deck, except during nighttime operations.

h. The LSO acknowledges red deck status light and reports readiness status to the HCO upon overhaul of the tiedowns.

3. Helicopter Takeoff .

a. Execute a positive liftoff with the flight deck as level as possible to reduce the risk of dynamic rollover.

b. Excessive flight deck motion at liftoff can cause the H-65 lateral fins and/or tail stinger to contact the flight deck.

c. The helicopter shall be moved laterally clear of the cutter before commencing any forward movement in order to maintain adequate obstacle clearance. The helicopter should takeoff over the windward side of the cutter unless hove to in the ice or pier side and the evolution has been prebriefed.

d. While moving laterally, extreme care shall be taken to ensure that the helicopter does not descend before clearing the cutter. During the initial portion of the transition to forward flight or ITO, extreme care shall be taken to ensure that the helicopter does not drift back toward the cutter or descend into the water.

e. During H-60 aft takeoffs, the helicopter climbs to allow the cutter to move forward underneath the helicopter and cross the fantail at approximately 50 to 70 feet. This will appear as a takeoff aft.

f. Single Pilot Takeoffs. Single pilot takeoffs should be accomplished to the side of the cutter that places the pilot closest to the superstructure or obstructions.

g. Nighttime Takeoff Procedures. The nighttime takeoff procedures are the same as day takeoff procedures until the aircraft is clear of the cutter. During unaided takeoffs, the pilot should be prepared to transition to an ITO profile when clear of the cutter unless conducting a touch-and-go box pattern. It may be desirable for the pilot in the outboard seat to conduct the ITO and the pilot in the inboard seat to act as Safety Pilot to ensure adequate clearance from the cutter.

4. Dynamic Tiedown Training Procedures.

a. For tiedown crew training and proficiency, primary tiedowns may be used with TALON engaged or anytime the ship is operating within general launch and recovery limits of 2 degrees pitch and 4 degrees roll. This applies to all helicopter models.

b. Normal Takeoff Procedures shall be followed, omitting all takeoff signals.

c. If operating above general launch and recovery limits, the pilot SHALL NOT disengage the TALON at anytime. Aircraft without any type of securing device (i.e., TALON/ASIST) may not conduct this training above general limits.

d. Before beginning the training, the pilot, HCO, and LSO shall be briefed on the procedures, the number of primary tiedown training evolutions to be performed, and each member's responsibilities. Once briefed, the LSO can direct the tiedown crew to enter and exit under the rotor system multiple times without a helicopter takeoff between tiedown evolutions.

e. It is not required to overhaul tiedowns between evolutions.

H. TRAFFIC PATTERN.

1. Normal Pattern.

   a. The traffic pattern is a racetrack pattern (left or right), flown visually, normally at 500 feet.

   b. Pattern operations are not permitted if the ceiling is less than 500 feet or the visibility is less than 1 mile.

2. Box Pattern .

   a. In order to save time during multiple Touch and Go landing operations, the pilot may elect to remain in a hover while maneuvering into position for successive landings.

   b. After sliding clear of the cutter, the pilot reduces forward speed of the helicopter relative to the water, allowing the cutter to advance.

   c. When the cutter is clear ahead of helicopter, the pilot slides the helicopter into a position aft of the cutter (aligned with the appropriate lineup line) and requests clearance to land or Touch and Go as appropriate.

   d. When clear of the cutter, the pilot should adjust altitude and reposition for normal approach to the flight deck upon receipt of landing or Touch and Go clearance.

I. GENERAL RECOVERY PROCEDURES.

1. Overview. The following are the sequence of events and activities required for a helicopter landing evolution. Except as noted, it is assumed that preparations for helicopter operations have been made, and FLICON ONE has been set.

2. Pre-Approach Phase. This phase includes all actions required before the helicopter is cleared to land and commence an approach to the flight deck.

   a. Helicopter passes position, number of persons onboard (POB), Estimated Time of Arrival (ETA), and time to fuel exhaustion which shall be passed in an hours plus minutes (e.g., one plus two-zero) format. It is critical to note both the remaining fuel time and the time of the call.

   b. If properly equipped, the cutter establishes radar contact and provides radar flight following for the helicopter per Chapter 7.

   c. Cutter establishes communications with the helicopter, conducts communications checks, provides navigational assistance to the helicopter as required, and assumes the helicopter radio guard.

   d. If properly equipped/qualified and requested by the helicopter, the cutter provides a radar-controlled approach.

e. If the helicopter is conducting a visual approach, the HCO should be notified of helicopter's position and estimated time of recovery (ETR). The HCO shall take control of the helicopter when the pilot reports the cutter in sight. HCO shall report to the helicopter that "TOWER HAS CONTROL."

3. Approach Phase.

a. Approach Phase - Pilot Actions.

(1) Before beginning an approach, the pilot shall complete the prelanding checks and report "PRELANDING CHECKS COMPLETE, GEAR DOWN, RIGHT/LEFT SEAT LANDING (FOR H-60 OPERATIONS ONLY) " and request permission for:

(a) Landing with TALON engagement (above general limits) or

(b) Touch and Go to port/starboard with TALON engagement or

(c) A series of (number of landings) TALON Touch and Go to port/starboard with TALON engagement or

(d) Landing with primary tiedowns or

(e) Landing with TALON engagement or primary tiedowns

(f) Touch and Go to port/starboard or

(g) A series of (number of landings) Touch and Go to port/starboard

(2) If requesting NVG landings, the pilot shall add NVG to the request; for example, "REQUEST NVG LANDING WITH TALON ENGAGEMENT."

(3) For ships with an authorized oblique or athwartships approach, it may be necessary or desirable to pedal turn to centerline. In such cases, this intention must be added to the end of the above request: "PORT TO STARBOARD/STARBOARD TO PORT LANDING WITH PEDAL TURN TO CENTERLINE."

(4) If engine shutdown after landing is desired, the pilot shall also request: "FOLLOWED BY ENGINE WASH (AS APPLICABLE), ENGINE AND ROTOR SHUTDOWN"

(5) During nighttime operations, all aircraft external lighting will remain secured except for the position lights during unaided LSO operations.

b. Approach Phase - HCO and LSO Actions.

(1) The HCO issues the clearance with any changes to the helicopter: "YOU ARE CLEAR FOR …" All clearances are followed by, "TAKE SIGNALS FROM THE LSO."

(2) The HCO illuminates the GREEN deck status light, except during nighttime operations, and passes green deck status to LSO over the radio.

(3) LSO acknowledges the landing clearance and deck status via the communications circuit by stating “ROGER GREEN DECK.” The LSO should not repeat the landing clearance back to the HCO. If a change to the aircraft lighting configuration is desired during nighttime operations, the LSO should also state either "REQUEST AIRCRAFT POSITION LIGHTS" if LSO unaided, or "REQUEST AIRCRAFT SECURE POSITION LIGHTS" if LSO NVG aided.

(4) For oblique approaches and H-60 landings, the LSO shall move laterally off the lineup line to keep the landing pilot in sight.

(5) The pilot commences a normal approach to arrive in an air taxi or hover, aligned with the lineup line, approximately three rotor diameters short of the flight deck at a minimum height of 50 feet (or 75 feet for H-60) above the water and adjust as necessary for the intended approach profile to the flight deck.

(6) Once behind the cutter, the pilot makes a final evaluation of deck motion and other existing conditions.

(7) Before the helicopter crosses the flight deck, the LSO shall visually check that the helicopter wheels are down. Except during nighttime operations, a blue light on the nose of the H-65 will be illuminated, indicating the wheels are down. If the wheels are up, the LSO shall notify the pilot by radio or give the WAVEOFF signal to the pilot.

c. Approach Phase - Flight Mechanic (FM) Actions.

(1) The FM should use the following advisory reports to assist the pilot in positioning the helicopter over the landing spot:

(a) "WHEELS OVER THE FANTAIL"

(b) "WHEELS OVER THE FLIGHT DECK"

(c) "WHEELS IN THE CIRCLE"

(d) "IN THE GRID" for TALON landings

(2) During takeoff and landing, the FM shall position the FM adjustable seat in such a way as to allow a clear egress route for personnel seated in the aft part of the cabin.

4. Cutter Delay in Recovery.

a. The cutter should be at FLICON ONE no later than the scheduled recovery time as established during the preflight briefing or amended during the sortie.

b. If complete cutter readiness has not been attained by the time the pilot requests landing clearance, the cutter response depends on the estimated length of delay. The HCO shall be proactive and provide timely notification to the helicopter if it appears the cutter readiness will not be attained as scheduled.

(1) If it appears that readiness will not be achieved by the time the helicopter arrives overhead, the HCO shall advise the pilot: “NOT READY FOR RECOVERY, (provide brief explanation of reason for delay), STANDBY.” The HCO provides the appropriate clearance when readiness is attained and without further request from the pilot.

(2) For longer delays, the HCO advises the pilot of a recommended action, the nature of the delay, and the estimated duration of the delay. For example, “CONTINUE TO ORBIT. WE ARE MANEUVERING AND EXPECT RECOVERY IN 5 MINUTES.”

NOTE

In case of an aircraft emergency, the CO, at the PIC’s request, may authorize landing on a clear deck, even if complete cutter readiness has not been attained.

5. Landing Procedures.

a. General

(1) LSO commences signals to assist the pilot in positioning the helicopter for landing.

(2) Pilot verifies the GREEN deck status light and hover taxies over the flight deck while maintaining sufficient altitude to preclude unintentional deck contact, while keeping the closure rate under positive control.

(3) Once an acceptable hover is established and the helicopter wheels are in the circle, the LSO gives the LAND signal. The LSO should not attempt to fine tune the aircraft position.

(4) Pilot observes flight deck motion and wave period, then lands when flight deck is approaching or passing through a level or horizontal attitude. Prolonged periods of hovering over the flight deck should be avoided.

(5) The landing is accomplished by maintaining position over the optimum touchdown point, aligned with the lineup line, and smoothly lowering the collective until deck contact is made.

(6) The pilot should not attempt a soft touchdown as this may lead to multiple contacts and result in excessive stresses on the landing gear.

(7) When deck contact is made, the pilot continues lowering the collective to the full down position, while simultaneously centering the cyclic.

(8) No further flight control inputs should be made by either pilot. Cyclic movement on deck may have an adverse effect on helicopter stability and can be dangerous to flight deck personnel.

WARNING

LANDING THE H-65 WITH THE NOSE WHEEL FORWARD OF THE TOUCHDOWN CIRCLE REDUCES OBSTACLE CLEARANCE AND IS PROHIBITED.

WARNING

IF THE H-65 IS LANDED WITH THE MAIN WHEELS AFT OF THE TOUCHDOWN CIRCLE, THE TAIL SKID MAY NOT BE OVER THE FLIGHT DECK, ALLOWING THE TAIL BOOM CONTACT WITH THE DECK EDGE COAMING OR DECK SURFACE FLOODLIGHTS.

CAUTION

DURING PERIODS OF EXCESSIVE PITCH AND/OR ROLL, THE H-65 LATERAL FINS MAY CONTACT THE FLIGHT DECK BEFORE THE TAILSKID OR MAIN LANDING GEAR.

NOTE

Landing position varies with the type of helicopter. For most helicopters, the landing position is normally with the forward wheels or skids in the touchdown circle. For the H-65, the landing position is with all wheels in the touchdown circle.

b. TALON Procedures. TALON is the primary means of securing the H-65 helicopter to the flight deck and should be installed on all H-65s scheduled to operate on Coast Guard cutters.

(1) When positioned over the forward aircrew seat tracks, the aircrew uses the TALON alignment lines to determine the fore and aft position of the helicopter relative to the grid.

(2) The pilot, after touchdown (when TALON is not set for automatic engagement), verifies that the TALON probe is positioned over the grid using aircrew input and the TALON alignment lines, and then activates the probe.

(3) Pilots confirms TALON engagement, signals for tiedowns or engine/rotor shutdown. This indicates to LSO and HCO that TALON is engaged and no further flight is intended.

(4) The HCO illuminates the RED deck status light (except during nighttime operations) and passes red deck status to LSO over the communications circuit.

(5) LSO acknowledges and verifies red deck status light over the communications circuit.

CAUTION

THE TALON GRID COVER SHALL BE REMOVED BEFORE OPERATIONS WITH A TALON-EQUIPPED AIRCRAFT AND SHOULD BE INSTALLED AT ALL OTHER TIMES TO ENSURE NONSKID AND VLA INTEGRITY.

c. TALON Malfunctions and Missed-Grid Procedures.

(1) In the event of a missed-grid landing, the helicopter is automatically cleared to execute either of the following evolutions with appropriate signaling to the LSO:

(a) Liftoff into a hover and reposition over the flight deck for TALON engagement, or

(b) Secure aircraft with primary tiedowns.

(2) The HCO shall pass the above missed-grid procedures to the aircraft prior to conducting initial helicopter operations. This SHALL be accomplished at the preflight brief if the helicopter is already embarked or over the radio when the aircraft is inbound for its first landing.

(3) The above missed-grid procedures do not apply to a series of Touch-and-Go landings with TALON; in the event of a missed grid during a series of touch-and-go landings, the helicopter may simply lift off and continue the series.

d. Single or Multiple Touch-and-Go Evolutions with or without TALON.

(1) The pilot requests a “SERIES OF (NUMBER OF LANDINGS) TOUCH-AND-GO LANDINGS TO PORT/STARBOARD/AFT.” Add “WITH TALON ENGAGEMENT” to the end of the clearance request, as applicable.

(2) The HCO advises the pilot: “YOU ARE CLEARED FOR A SERIES OF (NUMBER OF LANDINGS) TO PORT/STARBOARD/AFT (WITH TALON ENGAGEMENT). TAKE SIGNALS FROM THE LSO. GREEN DECK.” The HCO simultaneously illuminates the GREEN deck status light, except during nighttime operations.

(3) The LSO acknowledges the landing clearance and verifies GREEN deck status light over the communications circuit.

(4) The pilot, when ready for takeoff, verifies the GREEN deck status light (except during nighttime operations) and gives the READY FOR TAKEOFF signal to the LSO.

(5) The LSO responds with the TAKEOFF signal in direction of takeoff clearance.

(6) If TALON is engaged, the pilot releases the TALON probe and delays takeoff approximately 2 seconds after activating the TALON release to allow the probe to lift clear of the grid. The TALON LKD light shall be extinguished before attempting takeoff.

(7) Unless a change in clearance is required, the HCO ensures that the GREEN deck status light remains illuminated for the duration of the approved Touch-and-Go series (except during nighttime operations). Once the helicopter completes the last takeoff of the series, the HCO then illuminates the RED deck status light (except during nighttime operations) and passes red deck status to the LSO over the communications circuit.

(8) The LSO acknowledges and verifies RED deck status light over the communications circuit.

(9) The HCO shall keep track of the landings in the Touch-and-Go series and advise the pilot via radio when one landing remains in the series.

(10) There is no limit to the number of touch-and-go landings in a series. HCOs may grant any number of evolutions but should consider the effects of environmental conditions and fatigue on flight deck personnel.

NOTE

Clearance for multiple touch and go landings are issued in a series (e.g., "YOU ARE CLEARED FOR A SERIES OF TEN TOUCH-AND-GO LANDINGS"). The clearance can be canceled at the discretion of the CO, HCO, or anytime the pilot requests to change the clearance. A Touch and Go series shall not be extended if more landings are required. The original series shall be canceled and a new clearance request shall be made for the requested deviation.

NOTE

During TALON operations and multiple Touch-and-Go landings, tiedown crew are not required on the flight deck unless considered essential for safety due to weather, aircraft emergency, or when conducting tiedown crew training. When the tiedown crew is not required, they should muster in the same space as the fire party personnel and be ready to respond to the LSO on short notice.

e. Primary Tiedown Procedures.

(1) After landing, the pilot gives the INSTALL TIEDOWNS signal to the LSO.

(2) The LSO then gives the INSTALL/OVERHAUL TIEDOWNS signal to the tiedown crew.

(3) The HCO illuminates the RED deck status light (except during nighttime operations) and passes red deck status to the LSO over the communications circuit when any of following is observed by the HCO:

(a) INSTALL TIEDOWNS signal from the pilot,

(b) INSTALL/OVERHAUL TIEDOWNS signal from the LSO, or

(c) Movement of the tiedown crew toward the helicopter.

(4) The cutter shall maintain heading and speed until the helicopter is secure on deck.

(5) The tiedown crew simultaneously attaches all tiedowns IAW Chapter 11.

WARNING

ONCE THE PILOT HAS GIVEN THE INSTALL TIEDOWNS SIGNAL, ATTEMPTS AT FURTHER FLIGHT ARE PROHIBITED. THE COLLECTIVE SHALL REMAIN AT THE MINIMUM PITCH POSITION AND THE CYCLIC SHALL REMAIN IN THE NEUTRAL/CENTERED POSITION.

NOTE

If the helicopter lands outside the touchdown circle, a secure tiedown may not be possible. Accordingly, the LSO should give the HOVER signal and reposition the helicopter. However, during conditions of heavy pitch and roll or strong winds, and if, in the estimation of the LSO, the helicopter can be reached with the tiedowns, it should be secured in the initial landing position.

NOTE

Helicopters landing on cutters moored pier side or icebreakers hove to in the ice may omit the use of tiedowns and tiedown crews with the concurrence of the CO and the Senior Aviator. However, the flight deck shall be free of ice and snow to operate without tiedowns.

J. SHUTDOWN PHASE.

1. Overview. The pilot(s) shuts down both the engines and the rotor(s) to secure the helicopter.

CAUTION

IF THE H-65 HELICOPTER IS TO REMAIN ON DECK RUNNING FOR AN EXTENDED PERIOD OF TIME, THE PILOT SHALL DISENGAGE THE HELICOPTER AUTOMATIC FLIGHT CONTROL SYSTEM (AFCS) TO AVOID INDUCING A FULL RUDDER PEDAL DEFLECTION SHOULD THE CUTTER CHANGE HEADING.

a. Engine Wash (H-65).

(1) After helicopter is secured on deck and the cutter is at red deck, the pilot initiates the Engine Wash Procedure unless an immediate shutdown is necessary.

(2) The LSO observes the aircraft flight mechanic and directs him/her in and out of the rotor arc, as necessary, to complete the engine wash on both engines.

b. Engine and Rotor Shutdown.

(1) After helicopter is secured on deck, the cutter is at red deck, and the engine wash has been completed (as required), the pilot shall give the DISENGAGE ROTORS signal to the LSO.

(2) The LSO contacts the HCO over the communications circuit and makes the following request: “REQUEST AMBER DECK FOR ENGINE AND ROTOR SHUTDOWN.”

(3) The HCO, after verifying the cutter is maintaining heading and speed, illuminates the AMBER deck status light (except during nighttime operations) and passes amber deck status to LSO over the communications circuit.

(4) The LSO returns the DISENGAGE ROTORS signal to the pilot.

(5) The pilot then completes the helicopter shutdown checklist.

(6) The LSO, when rotor comes to a complete stop, reports “HELICOPTER IS SECURED” over the communications circuit.

(7) The HCO reports to the OOD red deck status.

(8) The HCO sets the refueling detail or secures from flight quarters, as appropriate.

WARNING

STEADY HEADING AND SPEED SHALL BE MAINTAINED WHILE THE AMBER DECK STATUS LIGHT IS ILLUMINATED. ANY CHANGES IN THE CUTTER HEADING OR SPEED DURING ROTOR DISENGAGEMENT MAY CAUSE EXCESSIVE ROTOR BLADE DEFLECTION, RESULTING IN A BLADE STRIKE TO THE AIRFRAME.

WARNING

MAIN ROTOR BLADES MAY DIP AS LOW AS 1 FOOT ABOVE THE FLIGHT DECK DURING SHUTDOWN IN EXTREMELY WINDY CONDITIONS.

K. POST-SHUTDOWN.

1. After shutdown, when using TALON or primary tiedowns, secondary tiedowns should also be installed at the discretion of the Aircraft Commander.

2. When operating with TALON, primary and secondary tiedowns shall be installed and the TALON system disengaged after aircraft shutdown if the aircraft is to remain on deck for more than 1 hour.
3. If resumption of flight operations is planned within a brief period and weather conditions permit, secondary tiedowns may be omitted at the discretion of the Senior Aviator and/or the CO.
4. If more than a brief stay is intended, blade boots and intake and exhaust plugs shall be installed. If inclement weather is anticipated, the blades shall be folded or removed if possible (see blade folding weather parameters outlined in Chapter 11) and the helicopter secured with secondary tiedowns, strut collars, and intake and exhaust plugs.
5. On cutters with hangars, the helicopter shall be secured in the hangar when no further flights are scheduled for the day (see Chapter 11). If fueling is required, it should be accomplished promptly after securing to provide a lower center of gravity and prevent condensation in the helicopter fuel cells.
6. Any maintenance being conducted aloft on helicopter requires strict supervision from the bridge. The OOD SHALL maintain steady course and speed at all times while crewmembers are aloft. The FDVS SHALL be activated and recording any time the air crewmembers are working aloft on helicopter. See Chapter 11 for further details concerning aircraft security.

L. WAVEOFF.

1. When it appears that continuation of an approach or landing is unsafe, a waveoff shall be given by the HCO and/or the LSO. A waveoff given by the HCO shall be verbal via the primary radio frequency with simultaneous activation of the waveoff lights (day ONLY), depending on the nature of the waveoff.
2. Once the aircraft is clear of the deck, the HCO shall announce "RED DECK." HCO shall ensure the aircrew is immediately informed of the reason for the waveoff. A new flight clearance must be given before operations proceed.
3. The LSO shall give the WAVEOFF hand signal. When the helicopter is in a safe condition, the pilot shall be informed of the reason the waveoff was initiated.
4. Waveoff Situations. Depending on the urgency of the situation, announcement of “RED DECK” to the pilot may suffice. Situations that a waveoff is appropriate include, but are not limited to:
   a. During approach, if the pilot attempts to cross the edge of the flight deck with the helicopter wheels up.
   b. A low approach that could result in the helicopter striking the edge of the deck or other obstructions.
   c. A high approach which could result in the pilot losing sight of the LSO or which could require a high rate of descent to correct.
   d. A fast closure rate which could result in the helicopter overrunning the flight deck, or which could require an excessive nose high/tail low attitude to stop the helicopter forward movement.

e. When the pilot is unable to establish or maintain a stable hover over the flight deck.

f. Anytime the LSO loses eye contact with the pilot for an extended period.

5. Waveoff Procedures.

a. There is no set pattern for a waveoff due to many variables.

b. The pilot objective is to maneuver the aircraft to a safe flight condition clear of the cutter and resolve the cause of waveoff before beginning another approach.

c. During periods of reduced visibility, the recommended waveoff procedure is to maneuver the helicopter to establish a stable hover three rotor diameters astern of the cutter. This location enables the pilot to follow visual signals in the event of a communications failure or where the cutter could observe a forced landing to the water or ice.

d. All crewmembers SHALL be cognizant of the maneuver being conducted at the time WAVEOFF is initiated, i.e., if during a VERTREP, if the load is hooked up, the pilot SHALL consider pickling the load if the load presents a possibility of contacted/snagging any portion of the flight deck.

WARNING

THE WAVEOFF SYSTEM SHALL NOT BE ENERGIZED DURING NIGHTTIME OPERATIONS. INADVERTENT USE OF THIS SYSTEM WILL ADVERSELY AFFECT THE NVGS AND MAY ALSO TEMPORARILY BLIND THE PILOTS WHEN UNAIDED.

NOTE

Compliance by the pilot with a WAVEOFF signal is MANDATORY.

M. OBLIQUE (ANGLED) LINEUP LINE OPERATIONS.

1. Helicopter Oblique Procedures.

a. The normal approach is flown aligned with the landing lineup line. Pilot landing requests shall indicate the orientation of the approach. For example, “REQUEST LANDING, STARBOARD-TO-PORT WITH PEDAL TURN FOR TALON ENGAGEMENT,” or “REQUEST TOUCH AND GO, PORT-TO-STARBOARD.” The HCO clearance shall specify the approach orientation for which the helicopter is cleared (i.e., starboard-to-port or port-to-starboard).

b. Use of the term “on the oblique” is not necessary since it is assumed when landing without TALON. Approach procedures remain unchanged except for helicopter lineup. Approaches may be made aligned with either port or starboard lineup lines, as wind, seas, and operational requirements dictate.

c. When over the touchdown circle, the landing should be made without changing heading (remain aligned with the lineup line) for a landing with primary tiedowns or for a Touch and Go without TALON.

d. Pedal turns are only authorized over the touchdown circle for the following reasons:

(1) A pedal turn to establish fore and aft alignment shall be executed to facilitate TALON engagement.

(2) To position the helicopter for hot refueling. The aircraft should be landed using the lineup line that places the pressure refueling receptacle closest to the superstructure. This affords a better view of the operation for the HCO, LSO, and fire party.

(3) To facilitate the loading of cargo or personnel in sight of the LSO.

(4) To land the helicopter with a fore and aft alignment to facilitate blade folding and/or hangaring.

e. Takeoffs are made by lifting to a hover while maintaining the oblique heading and sliding perpendicular to the cutter's centerline.

f. Box patterns may be used for training purposes. Clearing the flight deck as discussed in the previous paragraph and constant awareness of the helicopter position relative to the CIWS (on WHEC 378 cutters) are critical. Hovering position is approximately three rotor diameters from the ship on the appropriate extended lineup line vice aft of the stern.

g. The helicopter may be aligned with the ship's centerline for the first takeoff of a sortie or when using TALON. This alignment may be preferable at night or in reduced visibility to allow the cross-cockpit pilot a better view of the ship. In this case, the takeoff and departure is accomplished in the same manner as aboard a cutter with a straight-in approach or lineup line.

h. The pilot sight picture is changed and offers fewer visual cues to the position of the helicopter. Exacerbating this situation is the lack of extended lineup lines or lights for either approach. As a result, pilots will most likely need to refer to the LSO advisory signals more than they might for a straight-in approach.

i. Cross-cockpit visibility in the H-65 is limited and the workload increases for the pilot flying the cross-cockpit approach. Therefore, cross-cockpit oblique approaches (right seat pilot flying port-to-starboard approach or vice versa) in the H-65 are only authorized to be performed by an Aircraft Commander.

j. Cross-cockpit approaches in the H-60 are prohibited.

WARNING

FOLLOWING A PATH THAT IS PERPENDICULAR TO THE OBLIQUE LINE MAY RESULT IN AIRCRAFT CONTACT WITH THE CIWS ON THE FANTAIL OF WHEC 378 CUTTERS.

WARNING

THE NOSE OF THE HELICOPTER SHALL REMAIN AFT OF THE FORWARD PERIPHERAL LINE TO ENSURE ADEQUATE BLADE TIP AND OBSTRUCTION CLEARANCE.

CAUTION

THE H-65 TALON SHALL NOT BE ENGAGED WHILE ON THE OBLIQUE.

2. Helicopters Aligned Fore-and-Aft.

   a. For helicopter operations on cutters with oblique lineup lines, wind envelopes for helicopters aligned fore-and-aft for takeoffs or landings shall be based on the helicopter's actual or intended flight path.

      (1) Starboard-to-port envelopes are valid when arriving over the starboard deck edge or departing over the port deck edge.

      (2) Port-to-starboard envelopes are valid when arriving over the port deck edge or departing over the starboard deck edge.

3. Cutter Oblique Procedures.

   a. The LSO stands near the upwind corner of the superstructure or hangar in a position to maintain eye contact with the pilot. The LSO shall move left or right as necessary to maintain eye contact with the pilot to allow the pilot to see the signals.

   b. Tiedown personnel, when used, are stationed on the side of the hangar or cutter superstructure with one tiedown team member to maintain visual contact with the LSO and pass signals to the remaining members.

   c. Tiedown personnel, when not employed, shall be staged inside the cutter, or on the forecastle, and be in constant communications with the HCO. When needed for tiedown duties, the personnel shall report to the LSO on the flight deck when notified by the HCO.

   d. If the SGSI is used, it shall be aligned to the side that the approach to landing will be made.

NOTE

The SGSI shall remain secured unless requested by the pilot.

4. Relative Wind and Ship Motion Envelopes.

   a. Specific envelopes are provided in Appendix B for helicopter and ship combinations using oblique approaches. Otherwise, the envelope shown in Figure B-1 shall apply.

   b. Relative winds shall be passed to the pilot as relative to the ship centerline.

N. ATHWARTSHIPS PROCEDURES.

1. Athwartships Takeoff.

   a. Athwartships takeoffs are authorized only when hove to in the ice, moored pier side, at anchor, or using an operational dynamic position system with no flight deck motion.

   b. Athwartships takeoffs are only authorized on WAGBs.

   c. The procedures used are the same as those for a normal takeoff, except that the helicopter's heading is perpendicular to the ship's centerline.

   d. The LSO is positioned on the forward portion of the flight deck near the edge over which the helicopter will depart.

   e. The helicopter should be spotted in the direction of intended takeoff in the touchdown circle to ensure obstacle clearance. Pedal turns to align the aircraft with the takeoff direction may be accomplished only with concurrence of cutter Commanding Officer and the PIC.

WARNING
THE TIEDOWN CREW HANDLING THE TIEDOWNS ON THE FAR SIDE OF THE HELICOPTER, IF USED, SHALL BE INSTRUCTED TO WALK AROUND THE NOSE OF THE HELICOPTER WHEN MOVING TO AND FROM THEIR READY POSITIONS.

WARNING
ATHWARTSHIPS TAKEOFFS OR LANDINGS ARE NOT AUTHORIZED AT NIGHTTIME.

2. Athwartships Recovery Procedures.

   a. Athwartships APPROACHES are authorized on all cutters when hove to in the ice, moored pier side, at anchor, or using an operational Dynamic Positioning System, with no flight deck motion.

   b. ATHWARTSHIPS LANDINGS ARE ONLY AUTHORIZED ON WAGBs.

   c. The athwartship procedures are the same as those for a normal landing, except the approach shall be flown on a heading perpendicular to the cutter, aligned with the center of the touchdown circle, to arrive in a 50 to 75 foot hover approximately three rotor diameters abeam of the flight deck.

   d. On cutters other than WAGBs, the landing procedure shall be accomplished from the transition point where the approach terminates over the flight deck. The pilot pedal turns the helicopter to align with the appropriate lineup line with wheels in the touchdown circle. Relative wind limitations for this landing procedure are 15 knots.

e. The HCO shall issue the clearance. For example: “CLEARED TO LAND WITH PORT/STARBOARD ATHWARTSHIP APPROACH, PEDAL TURN, (PRIMARY TIEDOWNS AND/OR TALON ENGAGEMENT, AS APPROPRIATE), ENGINE AND ROTOR SHUTDOWN. TAKE SIGNALS FROM THE LSO.”

f. If the helicopter is approaching from starboard, the LSO should be positioned at the forward portion of the flight deck on the port side. If the helicopter is approaching from port, the LSO will be positioned at the forward portion of the flight deck on the starboard side.

g. The helicopter shall land with its centerline aligned with the center of the landing area. The forward wheel(s) shall be in the touchdown circle to ensure adequate obstacle clearance.

WARNING

THIS PROCEDURE SHALL BE ACCOMPLISHED ONLY AFTER BOTH THE CUTTER CO AND PIC CONCUR THAT APPROPRIATE ROTOR CLEARANCE AND WEATHER CONDITIONS EXIST TO SAFELY CONDUCT THIS MANEUVER.

WARNING

OBSTACLE CLEARANCE SHALL BE MAINTAINED BY THE PILOT. SHOULD THE HELICOPTER BECOME UNSTABLE SUBSEQUENT TO GIVING THE INSTALL TIEDOWNS SIGNAL TO THE POINT WHERE A MISHAP IS IMMINENT, THE PILOT SHALL SHUT DOWN THE ENGINE(S), APPLY THE ROTOR BRAKE, AND SECURE THE ELECTRICAL SYSTEMS.

WARNING

THE TIEDOWN CREW HANDLING THE TIEDOWNS ON THE FAR SIDE OF THE HELICOPTER, IF USED, SHALL BE INSTRUCTED TO APPROACH THE HELICOPTER FROM THE 45 DEGREE POINT AND WALK AROUND THE NOSE OF THE AIRCRAFT TO THE OTHER SIDE.

WARNING

ATHWARTSHIPS TAKEOFFS OR LANDINGS ARE NOT AUTHORIZED AT NIGHTTIME CONDITIONS.

O. NIGHTTIME RECOVERY.

1. Safety Precautions. The following precautions shall be observed when operating with helicopters under nighttime conditions:

   a. Pilots shall not use shipboard NVGs (LSO/NSO NVG) in the aircraft. Shipboard NVGs do not have the same PMS cycle as those designated for aircraft use.

b. Flight deck personnel operating with ANVIS style NVGs on the flight deck during NVG flight operations shall wear clear shatter-proof non-distorting-type eye protection devices.

c. The use of the waveoff lighting system is PROHIBITED at all times during nighttime operations.

d. In no case shall any lights be allowed to shine directly into the eyes of the pilots.

e. Prolonged periods of hovering over the flight deck should be avoided.

NOTE

Cutter lighting and light discipline are critical to NVG performance and to the safe conduct of NVG flight operations. Lighting configurations and intensities will vary with ambient conditions and aircrew and flight deck personnel proficiency and preference.

2. Shipboard Lighting.

a. Cutters shall make the following 1MC announcement at least every 30 minutes during nighttime operations to remind personnel of required light discipline: "ALL HANDS ARE REMINDED OF NIGHTTIME OPERATIONS IN PROGRESS. MAINTAIN STRICT LIGHT DISCIPLINE THROUGHOUT THE SHIP."

b. Interior Shipboard Lighting. NVG-certified cutters should consider converting applicable interior red (night time) lighting to NVG blue lighting to facilitate LSO, NSO, and aircrew eye adaptation to the night environment. Cutter conversion to NVG compatible blue lighting also ensures that any light leaks will not adversely effect nighttime operations.

c. Exterior Shipboard Lighting.

(1) All unnecessary lighting, external to or visible from the helicopter, shall be secured during nighttime operations. All portable, non-NVG compatible lighting (e.g., flashlights, indicator lights) shall be extinguished and shall not be pointed at the helicopter under any circumstances.

(2) Cutters modified with NAVAIR approved NVG compliant shipboard flight deck lighting, such as blue light filters are not required to change overhead lighting configuration to launch and recover unaided aircraft.

(3) Intensity of VLA and other cutter lighting should be adjusted when possible to accommodate atmospheric conditions and pilot desire.

(4) The following lights are required for nighttime operations and shall be NVG compliant:

(a) Overhead Floodlights.

(b) Hangar/Superstructure Wash Lights.

(c) Deck Surface Floodlights.

(5) The following lights are not NVG compliant and shall be secured or dimmed to an acceptable level for aided operations. When dimmed for aided operators unaided personnel may not be able to see these lights, dependent upon ambient light conditions.

(a) Deck Lineup Lights (recommend 10% intensity).

(b) Deck Edge Lights (recommend 10% intensity).

(6) During NVG operations, all other cutter exterior lights SHALL be secured with the exception of cutter navigational lights.

(7) At no time SHALL flash photography be conducted during nighttime operations.

(8) While the helicopter is in the vicinity of the cutter, the ship should not energize any exterior lights without the concurrence of the aircraft commander.

CAUTION

OPERATING NAVIGATION LIGHTS IN DIM OR OFF POSITION DOES NOT CONFORM TO THE NAUTICAL RULES OF THE ROAD. CLOSE COORDINATION WILL BE NECESSARY, BOTH INTRASHIP AND INTERSHIP, WHEN USE OF NAVIGATION LIGHTING REQUIRES MODIFICATION.

d. Aircraft Lighting.

(1) During unaided LSO operations, the following aircraft lights shall be secured prior to crossing the deck edge unless the lights are specifically NVG compatible:

(a) Anti-collision Light.

(b) Landing/Hover Light (prior to crossing the cutter's deck edge).

(c) Nose Landing Gear Lock Light.

(2) During NVG aided LSO operations, the following aircraft lights shall be secured prior to crossing the deck edge unless the lights are specifically NVG compatible:

(a) Anti-collision Light.

(b) Landing/Hover Light (prior to crossing the cutter's deck edge).

(c) Position Lights.

(d) Nose Landing Gear Lock Light.

(e) Any other non-NVG compatible exterior lights.

(3) Once the aircraft is on final approach with the cutter in sight, the deck lineup light strobe switch shall be set to steady as it may induce vertigo in the pilots.

(4) Once the aircraft is on final approach with the cutter in sight, the homing beacon shall be secured as it may induce vertigo in the pilots.

(5) During nighttime operations, the landing or hover lights shall not be turned on until the helicopter is clear of the flight deck. The anti-collision light(s) and position lights shall not be turned on until the helicopter is established in a climb.

(6) Use of the flood and hover lights are permitted in the racetrack/box pattern.

3. Nighttime Takeoffs.

a. Certain evolutions require higher intensity NVG lighting than is used during normal nighttime operations. Any flight deck personnel movement, with the exception of tiedown operations, shall be conducted with the overhead floodlights, hangar/superstructure wash lights, and deck surface floodlights at 100% intensity in the interest of personnel safety. These evolutions include but may not be limited to aircraft fueling, passenger movement, traversing, HIFR, VERTREP, and aircrew change out.

4. Nighttime Pattern.

a. Cutter lighting and light discipline is critical. Lighting configurations and intensities will vary with ambient conditions and aircrew and flight deck personnel proficiency and preference.

b. The nighttime pattern does not differ from the day pattern.

c. Other vessels in close proximity shall be notified by the OOD via the bridge radio of current cutter navigational lighting configuration and to warn them of the dangers that bright lights affect the safety of aircraft during nighttime operations.

NOTE

If delay in receiving a landing/touch and go clearance is anticipated while in a hover, the pilot should consider departing the box pattern in favor of a normal traffic pattern.

5. Nighttime Recovery.

a. Nighttime pattern, approach, and landing procedures are the same as those for day operations with these exceptions:

(1) The helicopter should cross the deck edge at a slightly higher altitude than during daylight to ensure adequate obstacle clearance because of the difficulty discerning deck motion at night.

(2) All clearances should be passed to the helicopter via radio and/or LSO signals.

(3) The use of the waveoff lighting system is prohibited during nighttime operations.

(4) When the pilots are aided, the clearance includes the term NVG, i.e., “CLEARED FOR A SERIES OF FIVE NVG TOUCH AND GO LANDINGS TO PORT. TAKE SIGNALS FROM THE LSO.”

(5) Light discipline aboard the cutter is critical and shall be adhered to by all personnel during flight operations.

(6) The use of Computer Approach to a Coupled Hover (CATCH), Manual Approach to a Coupled Hover (MATCH), Precision Approach to a Coupled Hover (PATCH), NVG Aided Approach to a Coupled Hover (NATCH), and Indicated Air Speed-Vertical Speed (IAS-VS) procedures are highly recommended.

WARNING

VISUAL APPROACHES AT NIGHT ARE ONLY AUTHORIZED WHEN THE CEILING IS 500 FEET OR HIGHER, THE VISIBILITY IS 1 MILE OR GREATER (500/1), AND THE PILOT CAN MAINTAIN POSITIVE VISUAL CONTACT WITH THE CUTTER AND EITHER THE SGSI, IF AVAILABLE, OR THE WATER SURFACE. IF ANY DOUBT EXISTS AS TO CEILING, VISIBILITY, OR VISUAL CONTACT, AN INSTRUMENT APPROACH SHALL BE ACCOMPLISHED.

WARNING

BECAUSE OF THE MOTION OF THE CUTTER, THE PILOT SHALL CONSCIOUSLY AVOID USING THE CUTTER SUPERSTRUCTURE AS A HORIZON REFERENCE. UNAIDED OPERATIONS REQUIRE USE OF OTHER HOVER CUES TO OBTAIN A STABILIZED HOVER WHILE NVGS AID PILOT IN DISCERNING A VISIBLE HORIZON.

6. NVG Operations Aboard Non-NVG Retrofitted Ships.

a. For urgent missions, and with the concurrence of the Aircraft Commander and CO, aircraft may operate off of a non-NVG retrofitted ship under the following conditions:

(1) The PAC is NVG shipboard qualified and current.

(2) A thorough brief is conducted before operations commence.

(3) All shipboard lighting (non-NVG compatible) visible from the helicopter is secured, masked, or turned to its lowest intensity.

(4) The waveoff lighting system is secured.

(5) The ship's crew is briefed on the importance of light discipline and light leakage from the interior of the ship.

(6) The aircraft has position lights illuminated for visibility by the LSO.

(7) The LSO is briefed on the evolution and uses either NVG compatible signaling devices or unlit signaling devices.

(8) Ambient light is sufficient to allow adequate pilot visual cues over the flight deck environment.

CHAPTER 7. AIR TRAFFIC CONTROL AND INSTRUMENT APPROACH PROCEDURES.

A. INTRODUCTION. This chapter defines the Air Traffic Control doctrine to be used by cutters, including procedures for conducting flight operations in VMC and IMC, instrument approaches with helicopters, and control of aircraft working with a cutter. It also describes pilot procedures for conducting visual and instrument approaches to cutters.

B. IN THIS CHAPTER. This chapter discusses the following topics:

1. Responsibilities.
2. Control.
3. Communications.
4. Departure Procedures.
5. Arrival Procedures.
6. Flight Following Procedures.
7. Approach Procedures.

C. RESPONSIBILITIES.

1. Overview. The CO retains the overall responsibility for the safety of the cutter and crew. He/she shall ensure that personnel engaged in control of aircraft possess the knowledge and skills required for safe operations.
2. PIC. As directed by the Coast Guard Air Operations Manual, COMDTINST M3710.1 (series), the PIC is responsible for the safe and orderly conduct of the flight. The success and safety of the flight depend upon his/her knowledge and adherence to the procedures contained herein. Any deviation from these procedures or from other controlling instructions shall be reported immediately to the controlling agency.
3. Operations Officer. The Operations Officer shall be responsible for operational control of airborne aircraft, except when the control is assigned to another authority. This control refers to all airborne operations not incidental to the actual launch or recovery operations.
4. Combat Information Center Officer (CICO) or Combat Support Center Officer (CSCO). The CICO or CSCO is responsible for communication and navigation control of aircraft operating with the cutter. This includes providing advisory or positive control. Positive control, with the exception of the Emergency Low-Visability Approach (ELVA), shall only be executed with an operable air search radar and fully qualified ADC. The CICO or CSCO shall ensure that the ADCs know and follow standard Air Traffic Control procedures, and are proficient in providing advisory and/or positive control.
5. Controlling Agency (OSC, SMC, etc.). When planning combined cutter and aircraft operations, a controlling agency shall coordinate arrival and departure times, communications, navigation, separation of aircraft, etc.
   a. The controlling agency shall ensure that the pilots are familiar with the control requirements established in this chapter as well as any other special instructions and restrictions.

b. In the interest of safety, controlling agencies may also impose more stringent minimums (higher ceiling, greater visibility, etc.) than those contained in this Manual. This action is particularly appropriate for multiaircraft operations.

D. CONTROL.

1. Airspace.

a. Cutters generally operate in areas of uncontrolled airspace. As the term implies, no control is exercised over either civil or military aircraft, and the "see and avoid" rule applies. To provide a greater margin of safety for aircraft operating in conjunction with cutters, the following areas of airspace are established:

b. Control Area. The area of airspace surrounding a cutter within a 50 nm radius, in which the cutter has the capability of providing either positive (under IMC with air search radar coverage) or advisory control (under VMC) (Figure 7-1).

NOTE

No attempt shall be made by a cutter to exercise positive control of an aircraft already under the control of a different authority. Advisory control may and should be used until that authority relinquishes positive control.

NOTE

Compliance with the criteria in this chapter ensures International Civil Aviation Organization (ICAO) compliance for "Due Regard" procedures.

c. Control Zone. The airspace within a 5 nm radius of the cutter, extending from the surface to an altitude of 2,500 feet above Mean Sea Level (MSL) (see Figure 7-1). In order to establish a control zone, a cutter shall be certified Level I, qualified to conduct positive control operations, and have an operating air search radar. The following limitations apply:

(1) The control zone shall not overlap or adjoin the controlled airspace of another vessel or airport. If available, appropriate aeronautical charts should be consulted.

(2) The control zone shall not overlap or adjoin any special use airspace (restricted area, warning area, memorandum of agreement (MOA), etc.) unless authorized by the designated controlling agency. If available, appropriate aeronautical charts should be consulted.

(3) Where two or more cutters are in company, only a single control zone shall be established, as directed by the Senior Officer Present Afloat (SOPA).

WARNING

AIRCRAFT NOT OPERATING IN CONJUNCTION WITH A CUTTER MAY NOT BE AWARE OF THE CUTTER'S PRESENCE OR CONDUCT OF FLIGHT OPERATIONS. UTMOST VIGILANCE AND SURVEILLANCE IS REQUIRED, PARTICULARLY IN AREAS NEAR AIRWAYS, AIRPORTS, CONTROLLED AIRSPACE, OR SPECIAL USE AIRSPACE.

2. Control Criteria for Non-Coast Guard Helicopters. The degree of control to employ during flight operations with non-Coast Guard helicopters depends upon the weather.

   a. When the ceiling and visibility are at or above 500 feet and 1 mile, respectively (500/1), either positive control or advisory control may be provided.

   b. Any time the ceiling and/or visibility are below 500/1, except in cases of national defense, emergency, or when the saving of life is probable (Chapter 1), positive control shall be provided.

3. Control Criteria for Coast Guard Helicopters. The degree of control to employ during flight operations with Coast Guard Helicopters depends on the weather.

   a. When the ceiling and visibility are at or above 300 feet and 1 mile, respectively (300/1), either positive control or advisory control may be provided.

   b. Any time the ceiling and/or visibility are below 300/1, except in cases of national defense, emergency, or when the saving of life is probable (see Chapter 1), positive control shall be provided.

4. Advisory Control. Advisory control consists of monitoring radio frequencies and if available, using radar to advise aircraft of other traffic and operational or hazardous areas. Advisory control shall be used anytime the cutter is conducting flight operations, or has the radio guard of an aircraft, when positive control is not required (ceiling and visibility at least 300/1). Advisory control may be provided by either a Level I ADC or a Level II/III ADC.

WARNING

THE ADC IS NOT RESPONSIBLE FOR SEPARATION OF AIRCRAFT WHEN PROVIDING ADVISORY CONTROL. THIS RESPONSIBILITY LIES ENTIRELY WITH THE FLIGHT CREW. RADAR TRACKING IS NOT A PREREQUISITE FOR ADVISORY CONTROL. THEREFORE, OTHER AIRCRAFT MAY BE PRESENT NEAR THE CUTTER WITHOUT THE CUTTER'S KNOWLEDGE.

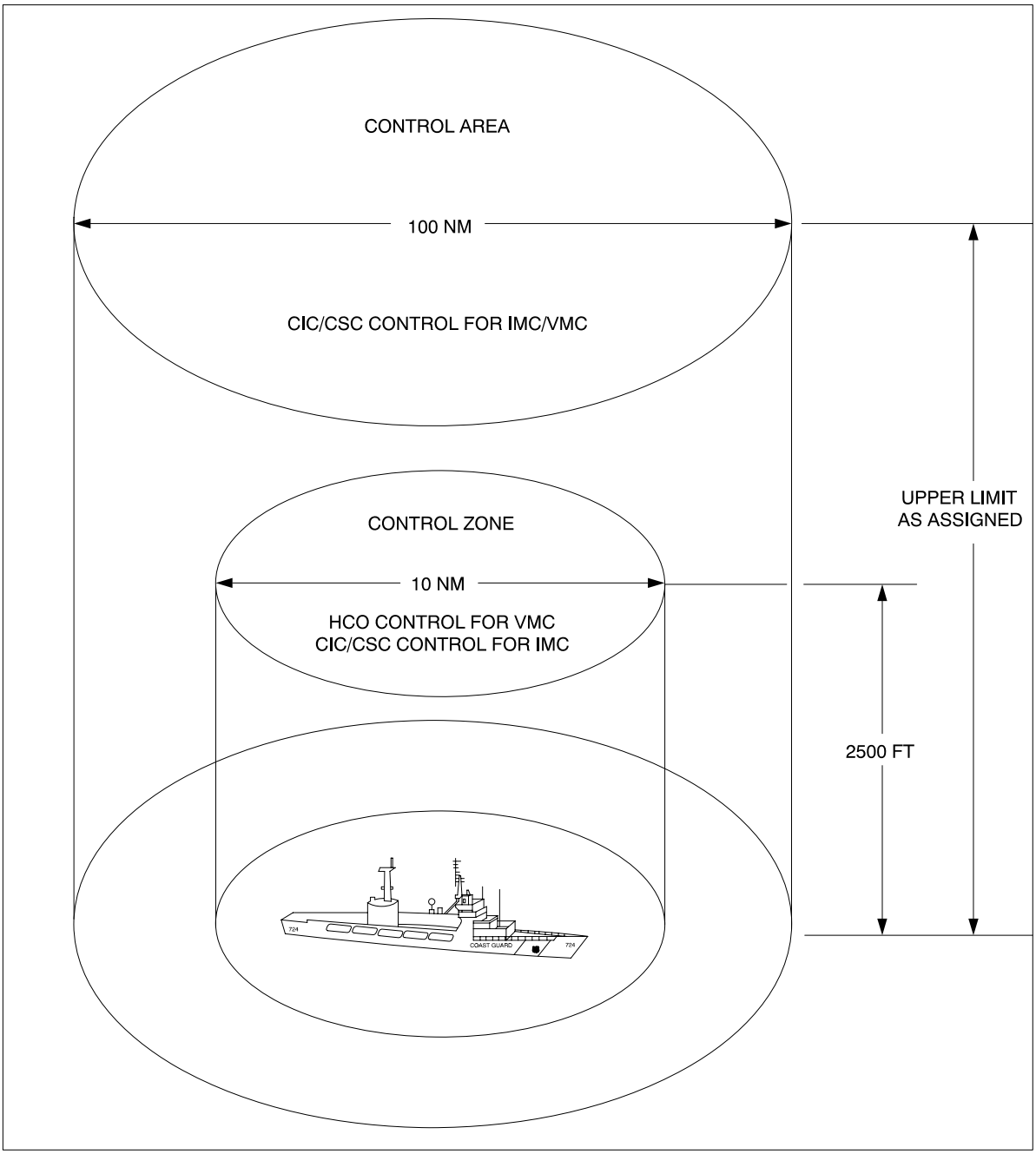

cg9100056a

Figure 7-1. Control Area and Control Zone Designations

5. Positive Control.

   a. Positive control shall be provided only by a qualified Level I ADC using IFF and air search radar capable of tracking all aircraft within the radar effective range. It requires both radar and radio contact with the aircraft being controlled. An aircraft is under positive control when it is complying with ADC instructions and clearances, including heading and altitude assignments and approach and departure procedures.

   b. Except where safety of flight would be jeopardized, compliance with these instructions and procedures is mandatory. Instructions issued by the ADC shall ensure that traffic separation is provided.

   c. Except for operations involving national defense, emergency, or when the saving of life is probable (Chapter 1), positive control is required for all operations when ceiling and/or visibility are less than 300/1, but may also be provided for operations when ceiling and visibility are 300/1 or greater.

WARNING

POSITIVE CONTROL DOES NOT NEGATE THE RESPONSIBILITY OF THE FLIGHT CREW FOR MAINTAINING TRAFFIC SEPARATION IN VMC.

6. Separation Criteria. The ADC shall ensure adequate separation of aircraft when providing positive control. Either lateral or vertical separation shall be provided as indicated below. These restrictions do not apply to launch and recovery operations or tactical maneuvers such as air intercepts, rendezvous, and close Antisubmarine warfare (ASW) Action.

   a. Lateral Separation.

      (1) At least 3 nm within 50 nm of the cutter's radar antenna.

      (2) At least 5 nm beyond 50 nm from the cutter's radar antenna.

   b. Vertical Separation.

      (1) Helicopters shall be separated by a minimum of 500 feet.

      (2) Helicopters shall be separated from fixed wing aircraft by a minimum of 1000 feet.

      (3) Fixed wing aircraft shall be separated by a minimum of 1000 feet.

NOTE

The controlling authority may require greater separation of aircraft. This is particularly appropriate in reduced ceilings and/or visibility and with aircraft not squawking altitude (Mode C).

   c. Traffic Reporting. All air contacts passing within 10 nm of an aircraft under control of the cutter shall be reported to the pilot, even if no evasive action is anticipated. In high-density air traffic areas, pilots may elect to modify air contact reporting requirements (i.e., San Francisco

Bay). The ADC should use the appropriate communications format for traffic reporting that is set forth in Appendix G.

E. COMMUNICATIONS.

1. Overview. Except under conditions of national defense or urgent SAR or when tactical situations dictate otherwise, two-way radio communications are required during all helicopter operations at night, during periods of low ceiling and visibility, and for flights beyond visual range of the cutter. Strict radio discipline is essential. However, procedures may be adjusted to meet the needs of the mission. Transmissions should be as brief as possible. Except as specified in this Manual, language should not vary appreciably from the standard air control phraseology detailed in the Allied Communications Operational Brevity Code Publication, ACP-165 (series).
2. HCO Communications. The HCO shall control communications as follows:
   a. Primary control during launch and recovery.
   b. Secondary control of departure and approach frequencies.
3. CIC or CSC Communications Control. CIC or CSC shall control communications as follows:
   a. Primary control of departure, approach, and air control frequencies.
   b. Secondary control during launch/recovery.
4. Electronic Emission Control (EMCON). Refer to Chapter 15.
5. Terminology. Expeditious, standardized communications are desirable in all circumstances. ADCs and pilots should use the brevity codes listed in Appendix G.

F. DEPARTURE PROCEDURES.

1. Overview. The responsibility for adherence to the assigned departure instructions rests with the PIC. However, as a minimum, CIC or CSC shall provide advisory control.
2. Radio Checks. Before launch, radio checks on the designated frequencies, using the appropriate aircraft and cutter call signs, shall be conducted unless equipment performance requires an airborne check (i.e., high frequency (HF) radio).
3. Night VMC. After departure, the helicopter shall climb to a minimum safe altitude before commencing its turn on course. If under positive control, deviations are permitted only with the concurrence of the ADC unless required for safety of flight.
4. IMC. After departure, the helicopter shall remain in visual contact with the surface until positive control has been established, and shall climb to a minimum of 300 feet before commencing its turn on course.
5. Radio Frequencies and Transponder Codes.
   a. The helicopter shall be launched using the predetermined frequency.
   b. At night or in IMC, the helicopter shall not change frequencies or transponder codes until achieving level flight and in cruise configuration.

c. Radio guard channels shall be monitored at all times.

d. When under positive control, the helicopter shall not shift from an assigned frequency or transponder code without the concurrence of the ADC.

e. When under advisory control, the pilot shall inform the ADC before changing frequencies or transponder codes.

G. ARRIVAL PROCEDURES.

1. When arriving within the control area (50 nm radius) of the recovery cutter and upon release from the previous control authority, an inbound aircraft shall contact CIC or CSC for control. The dialog format for initial contact is outlined in Appendix G.

WARNING
AIRCRAFT SHALL NOT ENTER A CUTTER'S CONTROL ZONE WITHOUT SPECIFIC APPROVAL FROM CIC OR CSC.

2. The compulsory arrival, holding, and approach voice reports required of the pilot are:

   a. Arrival within controllable range and release from the previous control agency.

   b. Acknowledge receipt of:

      (1) Holding or marshal instructions.

      (2) Estimated recovery time.

      (3) Altimeter setting, wind, weather (read back required for altimeter setting).

   c. Entering holding.

   d. Altitude or other assignment changes.

   e. Commencing approach.

   f. Initial approach fix (IAF) and final approach fix (FAF) or procedure turn.

   g. Cutter in sight (Talley Ho).

   h. Missed approach or waveoff.

H. FLIGHT FOLLOWING PROCEDURES.

1. Overview. The combined navigational capabilities of the cutter and helicopter may vary greatly, depending on geography, visual references, and the availability or status of land-based, shipboard, and airborne navigation equipment. Personnel and equipment capabilities shall be weighed against the particular mission objective when deciding the suitability of available navigation and flight following methods.

2. Cutter Responsibility.

   a. The cutter shall maintain a continuous position plot, on paper or computer, of all helicopters for which it has the radio guard. This plot shall be as accurate as possible.

   b. Using air and/or surface search equipment, the cutter shall maintain radar contact with the helicopter to the maximum extent possible. When radar contact is established or lost, or other shipboard position fixing information (TACAN, DF, etc.) becomes unreliable, the pilot shall be advised. If radar contact is not held or is lost, the ship shall maintain a dead reckoning (DR) plot of the helicopter's anticipated flight path, updating the plot with each helicopter position report received.

   c. Although this plot will normally be maintained in CIC or CSC, it is the Operations Officer's responsibility, through the OOD, to ensure that it is maintained.

3. Helicopter Responsibility.

   a. To enable the cutter to maintain an accurate DR plot, the pilot shall advise the cutter of their position and heading every 15 minutes.

   b. Significant deviations from the anticipated flight path originally given to the cutter or any helicopter equipment failures that may reduce navigation capability shall be reported as they occur.

   c. Final responsibility for the safe conduct of the flight shall rest with the PIC, using accepted navigation equipment and procedures.

4. Flight Following Methods.

   a. Flight following positions and headings shall be manually recorded every 15 minutes; however, the 5 minute DR recordings may be recorded electronically. The following are rank ordered procedures for position plots:

      (1) 5-minute shipboard radar or IFF fixes.

      (2) 5-minute DR positions updated by 15-minute fixes based on the helicopter's Inertial Navigation System (INS) or Global Positioning System (GPS) position.

      (3) 5-minute DR positions updated by 15-minute fixes based on the helicopter's position derived visually or from land-based navigational aids (TACAN/Very High Frequency Omnidirectional Range Station (VOR)).

      (4) 5-minute DR positions updated by 15-minute fixes based on the helicopter's position (radial and DME) from the cutter's TACAN.

      (5) 5-minute DR positions updated by 15-minute fixes based on the helicopter's position, using the helicopter's radar.

      (6) 5-minute DR positions updated every 15 minutes with the helicopter's bearing and distance from the cutter, using the cutter's DF equipment and DME arc.

b. The helicopter's operating distance from the cutter shall be reduced appropriately as the accuracy of flight following method being used decreases.

WARNING

USE OF DR AS THE SOLE SOURCE OF HELICOPTER POSITION FIXING IS PROHIBITED UNLESS VISUAL CONTACT WITH THE CUTTER CAN BE MAINTAINED. FOR MISSIONS INVOLVING NATIONAL DEFENSE, EMERGENCY, OR WHEN THE SAVING OF LIFE IS PROBABLE (Chapter 1), A WAIVER MAY BE GRANTED BY THE CUTTER'S CO.

5. Coordination and Safety.

a. Personnel and equipment capabilities, weather conditions, rescue capabilities and operational goals shall be considered when judging the acceptability of particular flight following methods.

b. Covert operations do not justify compromising acceptable navigation or flight following procedures. Benchmarks, discrete radio frequencies, prebriefed transponder codes, etc., may be used to satisfy covert objectives without abandoning proper flight following procedures.

c. Both the helicopter and the cutter shall be aware of and agree upon the method of flight following to be used, and alternate methods available. Operational checks of all navigation equipment shall be accomplished as soon as feasible.

d. The aircrew and all responsible personnel aboard the cutter shall be notified immediately of changes in weather conditions, cutter or helicopter malfunctions, or any other factors that may limit operations or compromise safety.

NOTE

The ADC or HCO shall inform the helicopter in the event radar contact is lost.

6. Aircraft Operational Status Reports. Cutters shall normally maintain the radio guard for the aircraft they control. Because of the hazards associated with operating over water and in areas with poor navigational aid coverage, operational status reports shall be made as follows:

a. Per the CG Telecommunications Manual COMDTINST M2000.3 (series), Chapter 15, airborne helicopters having their communications guard with a Coast Guard Station shall report (or otherwise signal as prebriefed during EMCON operations) "OPERATIONS NORMAL" to the cutter every 15 minutes (30 minutes fixed wing) and a Position Report every 30 minutes (60 minutes fixed wing).

b. Helicopters shall also report fuel state every 30 minutes or whenever there are changes in mission or changes in weather from time of flight brief. Fuel state shall be reported as "TIME TO SPLASH."

NOTE

Coast Guard Helicopters SHALL land with minimum 20 minutes of fuel in reserve. Flight followers should subtract 20 minutes from the reported time to splash in order to determine flight time remaining before the aircraft must land. Example: Pilot reports 1+30 to splash, the aircraft must land in 1+10.

c. When appropriate, the helicopter shall also report “FEET WET” or “FEET DRY.”

WARNING

THE ADC OR HCO SHALL INFORM THE HELICOPTER IN THE EVENT RADAR CONTACT IS LOST, OR OTHER SHIPBOARD POSITION FIXING EQUIPMENT (JOINT MARITIME COMMAND INFORMATION EXCHANGE (JMCIS)/JOINT OPERATIONAL TACTICAL SYSTEM (JOTS), TACAN, DIRECTION FINDER (DF), ETC.) BECOMES UNRELIABLE. THE HELICOPTER SHALL INFORM THE CUTTER OF AIRCRAFT EQUIPMENT FAILURES THAT MAY REDUCE NAVIGATION, POSITION FIXING, OR COMMUNICATIONS CAPABILITY. USE OF DR AS THE SOLE SOURCE OF HELICOPTER POSITION FIXING IS PROHIBITED UNLESS VISUAL CONTACT WITH THE CUTTER CAN BE MAINTAINED. FOR MISSIONS INVOLVING NATIONAL DEFENSE, EMERGENCY, OR WHEN THE SAVING OF LIFE IS PROBABLE (CHAPTER 1,), A WAIVER MAY BE GRANTED BY THE CUTTER CO.

7. Lost Communications Procedures (Cutter). When the cutter cannot establish communications and is not in visual or radar contact with the helicopter, the cutter shall initiate lost communications procedures indicated below.

a. Initial Indicators. When the helicopter misses an “OPERATIONS NORMAL” report by 5 minutes or communications cannot be established on primary radio frequency, the cutter shall attempt to regain contact on secondary, tertiary, and guard frequencies.

b. 15 Minutes Overdue. When the helicopter is 15 minutes overdue on an “OPERATIONS NORMAL” report, the cutter shall initiate the UNCERTAINTY phase, as follows:

(1) Set a course for the last known or estimated position of helicopter.

(2) Monitor UHF guard frequency (243.0 MHz) for ELT or voice transmissions while continuing attempts to communicate on predesignated primary, secondary, and tertiary frequencies.

(3) Activate the TACAN on the prebriefed frequency.

(4) At night, turn on the flashing homing beacon, SGSI, and flight deck lineup lights. Also, turn on the search light(s) and train skyward if practicable.

(5) Notify the SAR coordinator.

(6) Activate appropriate sections of the SAR Bill.

c. 30 Minutes Overdue. When the helicopter is 30 minutes overdue, the cutter shall proceed to the ALERT phase. In addition to continuing the action listed above, the following shall be accomplished:

(1) Make best possible speed for last known position of helicopter. Depending on the situation, it may be advisable to proceed to the last known position via the intended route or trackline of the aircraft.

(2) Continue to monitor all appropriate frequencies for signals from emergency communications equipment carried on the helicopter.

(3) Request appropriate additional SAR forces from the SAR Coordinator.

(4) Initiate immediate response procedures contained in the Aircraft Preaccident Plan.

(5) Make all preparations for recovery to be ready if the helicopter arrives overhead.

WARNING

THE HELICOPTER MAY ARRIVE OVERHEAD AT ANY TIME AND WITH LITTLE OR NO WARNING, POSSIBLY EXPERIENCING A SERIOUS EMERGENCY OR CRITICALLY LOW FUEL LEVELS. IT IS IMPERATIVE THAT THE CUTTER BE PREPARED TO LAND THE AIRCRAFT IMMEDIATELY.

d. At Fuel Endurance. When the helicopter's fuel endurance time is reached, the cutter shall proceed to the DISTRESS phase. In addition to continuing the actions above, the following shall be accomplished:

(1) Issue or request that the SAR Coordinator issue an urgent marine information broadcast. Continue attempts to communicate with the helicopter.

(2) Contact any other vessels in the area for possible assistance.

(3) Initiate secondary response procedures contained in the Aircraft Preaccident Plan.

e. If Helicopter Arrives Overhead. If the helicopter arrives overhead, recover using visual signals in Appendix C. Advise the SAR coordinator to stand down.

8. Lost Communications Procedures (Aircraft). When the helicopter loses communications with the cutter, the pilot shall:

a. If in visual contact with the cutter or if the cutter's position is known, abort the mission (unless mission urgency dictates continuing) and return to the cutter. Enter and maintain a holding pattern over the cutter until landing clearance is received.

b. If the cutter's position is unknown, abort the mission (unless mission urgency dictates continuing) and proceed to the nearest suitable landing area.

(1) Advise the cutter by the most expeditious means available.

(2) If unable to ascertain that the cutter has been notified, advise the cognizant SAR Coordinator.

(3) If a safe landing area cannot be reached with remaining fuel, proceed towards the last known position of the cutter via the last position reported by the aircraft or the prebriefed rendezvous point.

(4) Once the cutter is located, enter and maintain a holding pattern over the cutter until landing clearance is received.

c. If orbiting overhead the cutter, use the visual signals in Appendix C to obtain landing clearance.

9. TACAN/DME . When the helicopter is out of visual range of the cutter and is not receiving navigational information from land-based facilities, the cutter shall activate the TACAN/DME on the prebriefed frequency, unless prebriefed EMCON procedures are in effect. Regardless of EMCON, the TACAN/DME shall be activated any time requested by the pilot or when communications are assumed to have been lost. The cutter's call sign shall be transmitted three times in succession at least every 2 minutes. Cutters without automatic keying devices shall transmit a steady carrier.

I. APPROACH PROCEDURES.

1. Approach Criteria. The pilot's weather estimate as well as the cutter observed weather shall dictate the type of control and approach required for the recovery.

a. Visual Approach.

(1) If the helicopter is operating in VMC below the cloud ceiling, a visual approach to the cutter may be used.

(2) When the helicopter reports "TALLY HO," and the HCO has visual contact of the aircraft, the HCO should take control of the helo (regardless of cutter preparations for the appropriate FLICON) to complete the recovery.

(3) If the cutter is not prepared, the ADC or HCO shall issue orbit instructions until the cutter is ready for recovery.

b. Stabilized Glideslope Indicator (SGSI).

(1) The MK 1 MOD 0 SGSI system is an electro-hydraulic optical landing aid designed for ship use. With it, a pilot may visually establish and maintain the proper glideslope for a safe approach and landing. The visual acquisition range is approximately 3 miles at night under optimum environmental conditions.

(2) The SGSI provides a single bar of green light (1.5 degrees), amber light (1 degree), or red light (6.5 degrees) as shown in Figure 7-2. The light is projected through a 40 degree horizontal azimuth. The color of the light indicates to the pilot whether he/she is above (green), below (red), or on (amber) the proper glideslope.

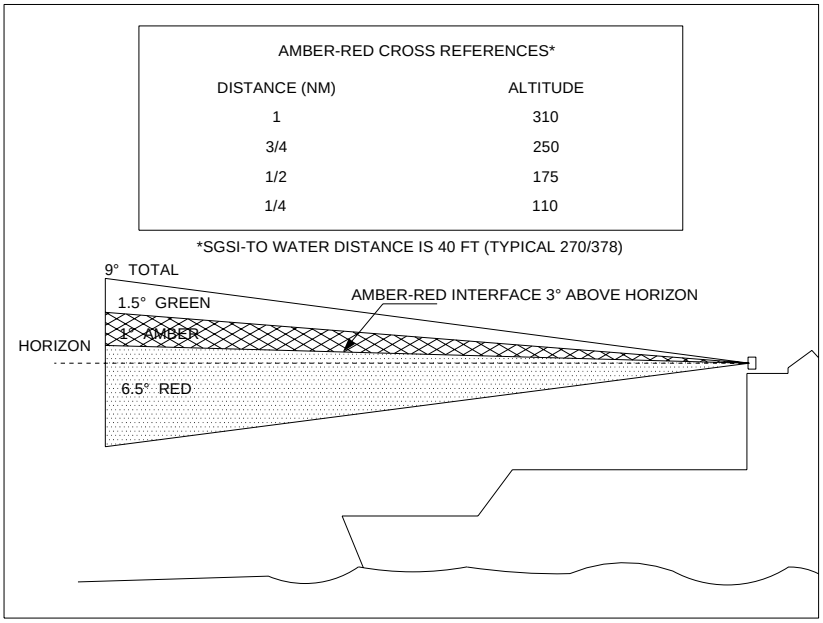

cg9100057a

Figure 7-2. Stabilized Glideslope Indicator Tricolor Beam

(3) Adjust the helicopter's altitude to keep the amber-red interface visible to maintain a 3 degree glideslope to the cutter. Fly the amber-red transition zone to minimize glideslope deviations. (Glideslope change information available.) Flying in the center of the amber zone requires large changes in glideslope before the pilot notices any error. Flying the amber-green transition zone would provide a steeper approach angle.

(4) A helicopter executing an SGSI approach would normally intercept the glide slope at an altitude of approximately 350 feet and a distance of 1 mile.

(5) If requested by the pilot, the SGSI may be energized for all night and IMC approaches to aid the pilot in the final phase of the approach.

c. Instrument Approach Procedures (IAP).

(1) Helicopters operating in IMC or in VMC above the cloud ceiling shall execute an instrument approach to the cutter. Figure 7-3 depicts the TACAN helicopter instrument approach procedure authorized for cutters. Approaches in IMC may be made only to cutters certified and qualified to conduct Level I operations.

(2) Practice approaches in VMC may be made to any cutter with an operating TACAN, or to any cutter that can provide radar vectoring (Air Surveillance Radar (ASR) approach).

(3) The altitude and distance checkpoints depicted on the approach path profile in Figure 7-3 are consistent with SGSI use. The final approach courses shown in Figure 7-3 are typical and apply to most cutters. They shall be adjusted as necessary to conform to the cutter's existing lineup lines.

d. Holding. The primary holding pattern, depicted in Figure 7-3, is PRIMARY MARSHAL. CIC or CSC shall specify which pattern to use in the holding instructions. When the cutter is prepared for recovery, CIC or CSC shall clear the helicopter for the approach.

e. TACAN Approach.

(1) When cleared for the TACAN approach by CIC or CSC, the pilot proceeds to the Initial Approach Fix (IAF) using radar vectors, TACAN information, or from holding, as depicted in Figure 7-3.

(2) After being cleared for the approach but before reaching the IAF the pilot completes the before landing checklist.

(3) At the IAF, the pilot reports, "COMMENCING APPROACH."

(4) Before the Final Approach Fix (FAF), the pilot reports, "PRE-LANDING CHECKS COMPLETE, GEAR DOWN, RIGHT/LEFT SEAT LANDING (SEAT POSITION IS FOR H-60 ONLY). REQUEST PERMISSION FOR…(TOUCH AND GO OR SECURING OPTION)."

(5) The CIC or CSC replies with a "CLEAR TO LAND" call.

(6) At the Missed Approach Point (MAP), the pilot reports, "NOT VISUAL, EXECUTING MISSED APPROACH" and executes the prescribed missed approach, or "VISUAL CONTACT," and completes the approach and landing using SGSI, VLAs, and LSO signals.

NOTE

The pilots may use NVGs during the approach.

APPROACH FREQ _____
SECONDARY FREQ _____
ALTIMETER _____
SHIP'S HEADING _____
PITCH _____
ROLL _____
LIST _____

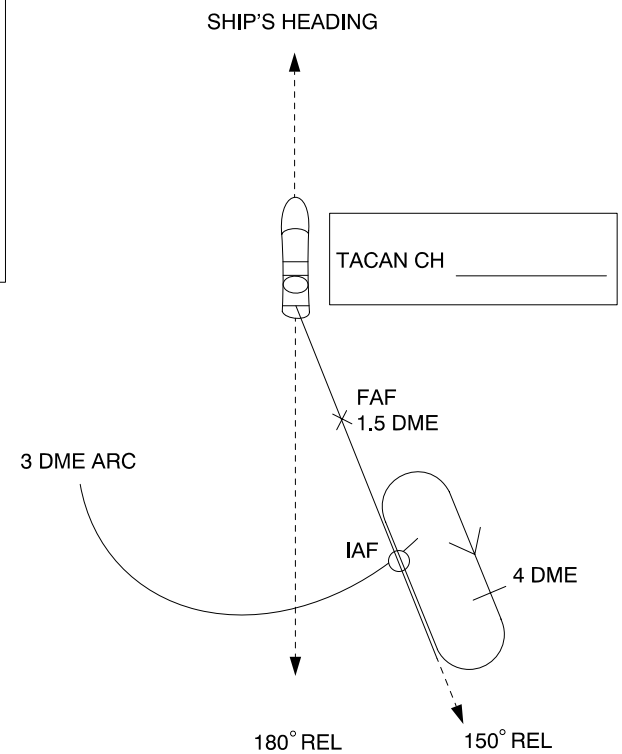

MISSED APPROACH
IF VISUAL CONTACT IS NOT MADE AT MAP, CLIMB STRAIGHT AHEAD TO 400 FT FOR 3 MIN OR 3 DME, PROCEED TO IAF AND HOLD AS PUBLISHED.

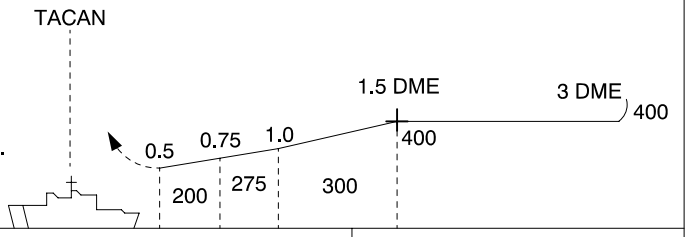

CATEGORY	MDA – MAP/DISTANCE	CEILING/VIS
TACAN	200 FT / $^1/_2$ NM	200 / $^1/_2$
RADAR–MONITORED*	200 FT / $^1/_2$ NM	200 / $^1/_2$

* MINIMUMS WHEN RADAR PROVIDES DISTANCE INFORMATION.
* TACAN DME ERROR MAY BE UP TO $^1/_2$ NM. USE CAUTION WHEN OPERATING UNFAMILIAR SHIPS.

cg9100058a

Figure 7-3. Shipboard TACAN Approach (Helicopter)

f. Radar Approaches. The cutter's air search radar and the radar onboard the helicopter can be used with the approach profile depicted in Figure 7-3. TACAN approach procedures apply, except that the pilot controls the helicopter's descent based on the range and azimuth information received from the cutter or from the helicopter's radar. The radar operator provides a continuous update of range and azimuth information until the landing environment or SGSI is visually acquired.

g. Missed Approach/Waveoff.

(1) If the landing environment is not in sight at the MAP and a safe landing cannot be executed, or if the pilot has been in visual contact and proceeded beyond the MAP and then loses contact, an immediate waveoff or missed approach shall be executed.

(2) The pilot climbs to 400 feet on a heading that will allow the helicopter to clear the cutter.

(3) If no instructions are received before reaching 3 nm or within 3 minutes, the pilot executes a left turn to downwind and proceeds to the designated holding point to attempt another approach.

(4) If meteorological conditions are considered to preclude a safe landing and sufficient fuel reserves exist, the helicopter should be diverted to a more suitable landing site.

h. Helicopter Approach Minimums.

(1) Ceiling and visibility minimums for each approach are prescribed in Figure 7-3. However, the CO, after consulting with the Senior Aviator, may establish more restrictive approach minimums that reflect significant changes in operational capabilities, such as decreased proficiency of ADC or the helicopter flight crews.

(2) Ceiling and visibility minimums shall be observed until visual contact with the water surface or the cutter is established.

(3) Following a missed approach, when a suitable alternate landing platform is available, pilots shall not commence an approach to the primary landing platform if the reported or observed weather is below minimums, unless it has been determined that the helicopter has sufficient fuel to proceed to the alternate landing platform.

i. CATCH/MATCH/PATCH/NATCH (H-65/H-60). Coast Guard helicopters may elect to execute:

(1) A Computer Approach To a Coupled Hover (CATCH).

(2) A Precision Approach To a Coupled Hover (PATCH).

(3) A Manual Approach To a Controlled Hover (MATCH).

(4) An NVG Aided Approach To a Controlled Hover (NATCH).

(5) An Indicated Air Speed-Vertical Speed (IAS-VS) Letdown.

NOTE

Final approach course should be within 30 degrees of the ship's heading to prevent placing the aircraft in a poor recovery position. The approach should be executed using the cutter's TACAN as a reference point.

j. Emergency Low-Visibility Approach (ELVA) Procedures.

(1) An ELVA to a cutter that is below approach minimums (200-foot ceiling and 1/2-mile visibility) is an EMERGENCY procedure.

(2) An ELVA serves as the final instrument approach procedure after all other helicopter instrument approach options have been exhausted.

(3) An actual ELVA shall not be attempted unless the helicopter does not have adequate fuel to divert to a precision approach-equipped facility.

(4) The ELVA pattern and radio calls are shown on Figure 7-4.

NOTE

Full procedure pattern items 1-6 depicted in Figure 7-4 are not mandatory. Procedure SHALL be briefed to aircrew and ALL radio transmissions in Paragraph 7.G. shall be completed.

(5) Practice ELVA. Practice EVLA in VMC should be conducted often for ADC and pilot proficiency. The primary factors which affect the quality of an ELVA are:

(a) The ADC's ability

(b) Accuracy of the information displayed to the ADC

(c) The pilot's instrument flight proficiency

(6) ELVA Preparation. The equipment used shall be fully operable and accurately calibrated at all times; emergencies may occur at any time that require the use of:

(a) Surface search radar

(b) Air search radar with IFF

(c) TACAN

(d) Gun fire control radar and associated computer

(e) Overlay or plotter

(f) UHF transceivers

(g) Anemometers

(h) Barometer

(7) ELVA Equipment.

(a) The radar that provides the most accurate, real-time tracking of the helicopter should be used during the ELVA.

(b) An approach pattern overlay may also be used to assist the air controller. At least one UHF transceiver should be set up as a backup on the primary control frequency. At least one transceiver should be set up as a secondary. Anemometers and the barometer shall be accurately calibrated.

(c) Bridge personnel shall keep the controller informed of significant changes in either relative wind or barometric pressure during the approach.

(d) An error of 0.05 inch in the barometric altimeter setting results in an altitude error of 50 feet, which is critical at the low altitudes flown during an ELVA.

(8) ELVA Initial Approach Pattern. The initial approach pattern is executed so that the helicopter reaches the 4-mile gate position, at an altitude of 400 feet and air speed of 70 knots, with all required radio transmissions (steps a. through s. in Table H-6) in Appendix H completed.

(9) ELVA Landing Clearance. In order to facilitate transition from approach profile to a safe landing, the ADC shall seek a landing clearance from the HCO as soon as practicable before or during the approach. This clearance is passed to the pilot at the 2 nm point on the final approach. The HCO shall monitor the primary frequency but shall not, other than in an emergency; initiate communications until the aircraft is on deck.

(10) ELVA Final Approach Profile.

(a) The helicopter shall commence the final approach at an altitude of 400 feet and an air speed of 70 knots. Regardless of the initial approach pattern used, the final approach shall be conducted exactly the same.

(b) This is the most critical phase of the ELVA. The ELVA final approach ADC shall have the approach plotted and actually have control of the helicopter before reaching the 4-mile gate.

(c) For cutters with a straight-in (center line) approach, the final approach heading should be the cutter's base recovery course (BRC), however, may be adjusted as necessary to compensate for radar blind spots.

(d) For cutters with an oblique approach, the final approach heading shall be aligned with the appropriate flight deck lineup line.

[1] For starboard to port approaches, the heading is the cutter's base recovery course minus the flight deck approach angle.

[2] For port to starboard approaches, the heading is the base recovery course plus the flight deck approach angle.

(e) Heading corrections on the final approach should be made in small increments (not more than 5 degrees, if possible). The helicopter shall use one-half standard rate turns on final approach. The tendency to over correct shall be avoided.

(11) ELVA Required Controller Radio Transmissions.

(a) Transmissions are keyed to the helicopter's range from the cutter, and shall be made at the appropriate time. The normal sequence and keying of voice transmissions is provided in Figure 7-4 and Table H-6. These transmissions are the required transmissions and shall be given for each approach. Corrections to headings must be given as required.

(b) Filler transmissions may be required to ensure that the maximum time between transmissions (1 minute in the pattern and 15 seconds on final) is not exceeded. Filler transmissions should give useful information to the pilot, such as assigned heading and distance from touchdown, dimensions of the flight deck, and so forth. Avoid routine radio checks as filler transmissions and do not continuously transmit, as this restricts the ability of the pilot to transmit information in an emergency.

(c) Whenever a heading is given, ensure an altitude is also given (for example, "TURN LEFT HEADING 200 (TWO ZERO ZERO), ALTITUDE SHOULD BE 300 (THREE HUNDRED) FEET)." Conversely, never give an altitude without including the assigned heading.

(12) ELVA Missed Approach Procedures.

(a) The pilot shall execute a missed approach if the cutter is not in sight at the designated minimums, normally 50 feet altitude and 100 yards.

(b) During final approach phase, if the ADC loses radar contact, the pilot shall be advised, "RADAR CONTACT LOST, IF SHIP OR WAKE NOT IN SIGHT, EXECUTE MISSED APPROACH."

(c) Variables such as radar performance, ADC proficiency, aircrew factors, etc., may require the cutter's CO to raise these minimums so as not to unduly endanger the cutter or helicopter.

(d) If a missed approach occurs, the pilot shall make a 30-degree turn to the left (right for port approach) and climb to 400 feet. The helicopter should then be vectored back into the ELVA pattern.

2. No Visual Contact; Critical Fuel. If the helicopter cannot establish visual contact with the water or the cutter at 50-feet MSL, and fuel exhaustion is imminent, the helicopter shall continue with a controlled descent until establishing visual contact with the water. Amphibious helicopters may

(conditions permitting) continue descent until making contact with the water. The helicopter should then air taxi in the direction of the best estimated position of the cutter.

WARNING

IT MAY BE PREFERABLE TO DITCH THE HELICOPTER WITH POWER ON RATHER THAN AUTOROTATE TO THE WATER FOLLOWING A FLAMEOUT FROM FUEL STARVATION.

3. Upon Making Visual Contact with the Cutter or Water. Continue approach and recovery in visual conditions using procedures contained in Chapter 6.

4. ELVA Radar Controllers Standard Voice Transmissions. Refer to Table H-6.

NOTE

All headings shall be expressed in degrees magnetic.

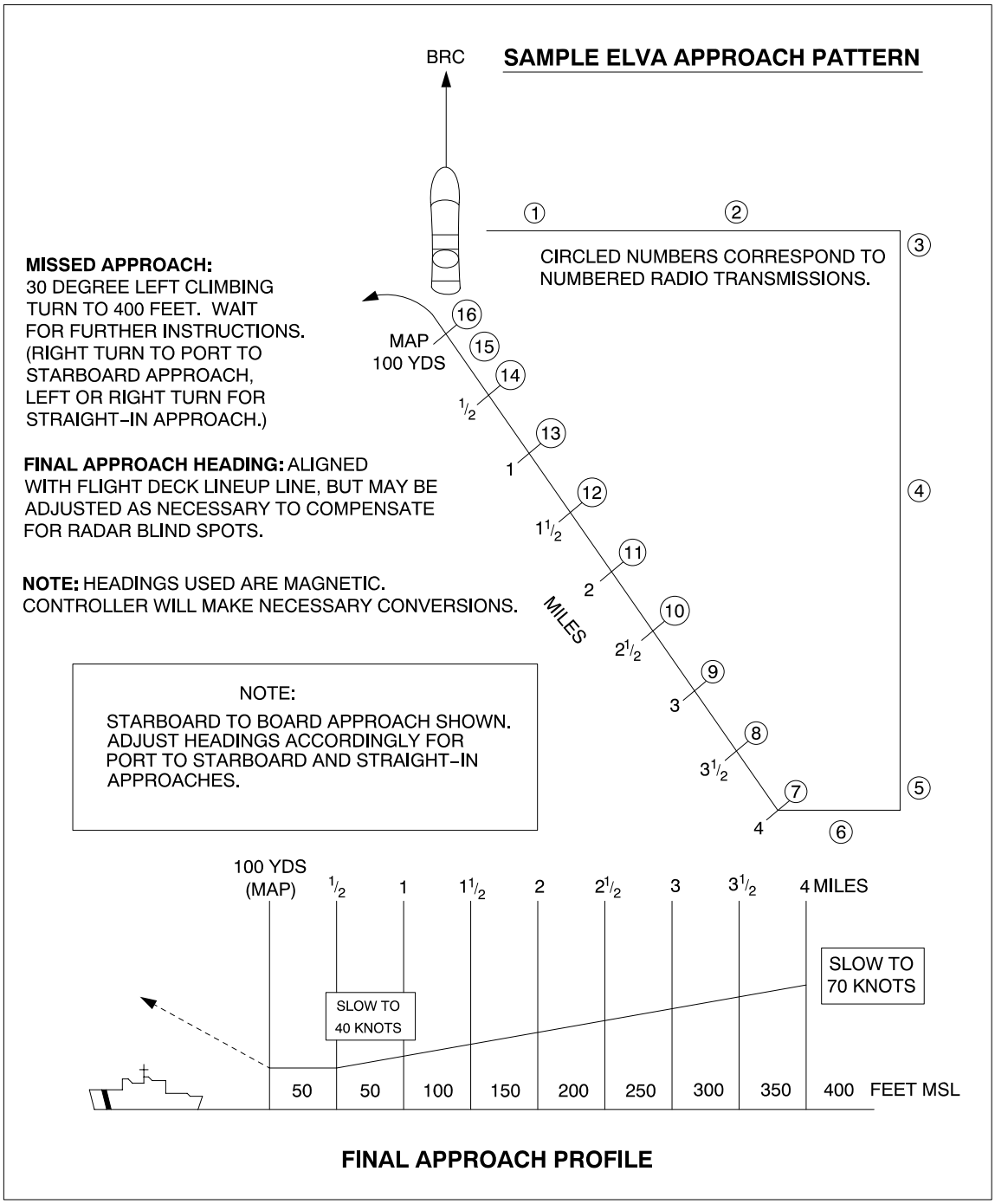

cg9100059a

Figure 7-4. Emergency Low-Visibility Approach (ELVA) Pattern

CHAPTER 8. AVIATION FUEL HANDLING.

A. INTRODUCTION. This chapter provides JP-5 fuel general information and establishes minimum quality and surveillance standards, testing requirements, safety precautions, and handling procedures concerning the acceptance, storage, and dispensing of aviation fuel. Insufficient knowledge or carelessness in fuel handling can result in accidents endangering lives and property. Personnel engaged in fueling have a serious responsibility and shall be thoroughly trained for the job.

B. IN THIS CHAPTER. This chapter discusses the following topics:

1. General Fuel Information.
2. System Equipment.
3. System Design.
4. Tests and Inspection.
5. Fuel Maintenance Procedures.
6. Safety Precautions.

C. GENERAL FUEL INFORMATION.

1. Overview. All aircraft are vulnerable to failures caused by fuel contamination because of the high fuel consumption rates and the sensitivity of fuel system components. Current procedures for maintaining cleanliness in jet fuel are capable of reducing contamination to very low levels when used on a continuing basis. It is essential that the performance of the contamination control system be closely monitored to detect problems as they occur. Chapter 542 of the Naval Ships Technical Manual (NSTM) contains detailed information on this subject.

WARNING

FUEL SYSTEM PRESSURE SHALL NOT EXCEED 55 PSI AT THE NOZZLE WITH THE NOZZLE FLOW VALVE IN THE CLOSED POSITION. PRESSURES HIGHER THAN 55 PSI MAY DAMAGE THE HELICOPTER FUEL SYSTEM.

NOTE

Any casualty to the aviation fueling facility, including faulty or inoperative system components, test equipment, and uncontrollable water or particulate contamination results in decertification of the facility, and shall be reported IAW Chapter 4.

2. Jet Fuel. There are three grades of turbine or jet fuel available for use by Coast Guard helicopters. Whether supplied by DoD or through commercial sources, they generally fall into the designation of JP-4, JP-5, or JP-8, depending on the characteristics of the fuel. JP-5 is the ONLY aviation fuel authorized for use on cutters.

CAUTION

HELICOPTERS SHOULD ARRIVE ONBOARD WITH ONLY JP-5 IN THE TANKS WHENEVER POSSIBLE. IF THIS IS NOT POSSIBLE, THE NON-JP-5 FUEL LOAD SHOULD BE PLANNED TO ARRIVE WITH A MINIMUM AMOUNT IN THE TANKS (ALLOWING FOR AN ADEQUATE RESERVE), WHICH SHALL THEN BE REFUELED IMMEDIATELY WITH JP-5 TO THE FUEL LEVEL REQUIRED FOR THE NEXT MISSION.

a. JP-4.

(1) JP-4 is a blend of gasoline and kerosene with a flash point ranging from -10 degrees Fahrenheit to +80 degrees Fahrenheit. It is an alternative fuel to JP-5 for turbine engine powered aircraft and is used only at shore stations and never onboard cutter.

(2) JP-4 is more dangerous to handle than JP-5 since the vapor space above JP-4 fuel in the tank normally falls in the explosive mixture range and can be ignited by static electricity. Also, JP-4 fires spread rapidly and are much more difficult to extinquish than those involving JP-5.

b. JP-8.

(1) JP-8 is a kerosene fuel with an intermediate flash point (100 degrees Fahrenheit). It is not authorized for storage or use on cutters. It is found extensively at military shore facilities

NOTE

If helicopters arrive aboard cutters fueled with JP-8, no special precautions are required except that the aircraft shall not be hangared until it is topped off with JP-5.

c. JP-5.

(1) JP-5 is a kerosene fuel with a high flash point (140 °F) facilitating shipboard handling safety.

(2) JP-5 is the only aviation fuel authorized for use on cutters.

(3) JP-5 is also used extensively at shore stations.

(4) In contrast to JP-4, contaminant removal from JP-5 is more difficult because of its higher viscosity and density. If adequate surveillance of this type fuel is not practiced, contamination is almost certain to result. The deterioration problems normally encountered are:

(a) Reduction in flash point due to contamination with other fuels having a lower flash point. (As little as five percent JP-4 mixed with JP-5 will lower the flash point below the allowed minimum of 140 °F.)

(b) Reduction of Fuel System Icing Inhibitor (FSII) due to contamination with water.

(c) Contamination with dirt, rust, and water. This fuel has a great affinity for these contaminates.

3. Fuel Definitions. To aid in understanding this chapter, the following definitions are provided:

a. Clear - No visible sediment or water present.

b. Bright Fuel - The fluorescent appearance that has no cloud or haze.

c. Dry fuel - Fuel that contains no water.

d. Coarse and Fine particles - Solids that are larger than 10 microns are coarse particles which can be seen with the naked eye. Fine particles are less than 10 microns and may appear as haze or cloudiness.

e. Coalescers - Remove water from the fuel by causing droplets to combine, making them heavier and permitting them to collect on the bottom.

f. Stripping - The process of removing water and other contaminants that settle out of fuel.

g. GO-NO-GO Fuel Monitor - A canister containing several filter elements that are designed to remove both water and particulate contamination from the fuel. As the elements become contaminated, they restrict the flow of fuel to the nozzle.

4. Types of Fuel Contamination. There are four major classifications of materials commonly encountered as contaminants in aviation fuels. Each of these may be responsible for specific fuel system problems. The most serious situation occurs when more than a single type of contamination is present.

a. Particulates.

(1) Particulates are solid contaminants that do not dissolve in fuel.

(2) Most common are iron, rust, scale, sand, and dirt. Also included are metal particles, lint, particles of filter media, gums, resins, rubber, and other materials in particle form.

(3) The consequences of particulate contamination in aviation fuels may be severe if particulates are allowed to reach the aircraft.

(4) One method for removing particulates is providing adequate settling time (3 hours per foot of fuel depth above the stripping line) for solids to settle out of the fuel before it is withdrawn from the storage tanks. Another method, and perhaps the best, is to recirculate the fuel through filters and/or separators.

(5) Particulate contamination can be held well below a level of 1 milligram per liter (mg/l) in a properly functioning fuel distribution system. If contamination levels exceed 1 mg/l, refer to Table 8-2.

b. Water.

(1) Water occurs in aviation fuels in three different forms:

(a) Dissolved.

(b) Entrained.

(c) Free water (either liquid or frozen).

(2) Free water is the only one that can be drawn off or separated from the fuel. Dissolved water or entrained water can, however, be reduced to free water and then drawn off or separated.

(3) Dissolved Water. All aviation fuels dissolve water in varying amounts depending upon the fuel composition and temperature. This can be likened to the humidity in the air. Lowering fuel temperatures will cause dissolved water to come out of solution as entrained water (somewhat as fog comes out of air). Except for changing to the free state upon temperature drop, dissolved water does not pose a problem to the helicopter and cannot be removed by practical means.

(4) Entrained Water. This is water suspended in tiny droplets in the fuel. Individual droplets may or may not be visible to the naked eye, but they can give the fuel a cloudy or hazy appearance depending upon their size and number. Entrained water usually results when a water slug and fuel are violently agitated as in passing through a pump, and may settle out in time depending upon the droplet size, specific gravity, viscosity of the fuel, and currents within the tank. A water haze may often be found in turbine fuels.

(5) Free Water.

(a) This water is completely free of fuel. It can be accumulated in storage of dispensing facilities by:

[1] The settling of condensed moisture from the atmosphere.

[2] The infiltration of water through fill lines, vents, tank connections, etc.

[3] The delivery of fuel that contains water.

(b) Large slugs of free water can cause engine flameouts and ice from slugs and entrained water can severely restrict fuel flow by plugging aircraft fuel filters and other mechanisms.

(c) An adverse side effect of accumulations of undrainable water in any storage tank is the growth of micro-organisms and reduction of the level of FSII.

(d) Free water in the form of water slugs, visible water droplets, or hazy entrained water cannot be tolerated in a fuel handling system and shall never be delivered into an aircraft.

c. Micro-organisms.

(1) Microbiological growths can become a critical problem in turbine fuel systems. Hundreds of micro-organism species have been isolated and identified. Many micro-organisms are airborne, while others are found in the soil. Fuel is constantly exposed to inoculation by this type of contamination.

(2) Generally, these organisms are found living at the fuel and water interface, deriving their nutrients from the hydrocarbons and adding their metabolic products to the aqueous phase.

(3) There is considerable evidence that such microbes can maintain viability even in the absence of water and upon deposition in a storage tank containing water, the organisms may begin to propagate at a very high rate.

(4) The effects of microbiological contamination are many and varied. Both the organisms and their products tend to collect at fuel and water interfaces resulting in mats, slime, and sludge. If the interface happens to be maintained on or within a filter element, rapid plugging may occur. In addition, the latter condition may result in rapid penetration of the organisms through the filter and subsequent contamination of the fuel downstream of the filter.

(5) Filter plugging may also result from the breakup of upstream fungal mats. In some cases, the organisms and their byproducts have softened or destroyed the top coatings of integral fuel tanks and subsequently caused severe corrosion of the helicopter structure.

(6) Because microbes thrive in water, a simple and effective method to prevent or retard their growth is to eliminate the water.

(7) The presence of visual microbiological growth in fuel being delivered to a helicopter is a reliable indication of the presence of free water and the failure of fuel cleanup equipment.

d. Surfactants.

(1) The term “surfactants” is a contraction of “surface active agents.” These are soap or detergent-like materials that occur naturally in fuel, or may be introduced in the refining processes by inclusion of additives into the fuel, or may be washed off the internal surfaces of containers previously holding other products.

(2) Surfactants are usually more soluble in water than in fuel and reduce the interfacial tension between water and fuel, stabilizing suspended water droplets and contaminants in the fuel. They are attracted to the elements of the filters or separators and can make these elements ineffective. Surfactants also tend to plate out on metal surfaces and may adhere to these surfaces until surfactant rich water droplets are formed. The droplets run down the side of the cutter’s tanks and form puddles in the bottom or in the sumps.

(3) Surfactants, in large concentrations, usually appear as a tan to dark brown liquid with a sudsy-like water and fuel interface. Surfactants alone do not constitute a great threat to aircraft. However, because of their ability to suspend water and dirt in fuel and disarm filter and/or separator action, surfactants have become one of the major contaminants in aviation fuels.

e. Miscellaneous Contaminants. Miscellaneous contaminants can include either soluble or insoluble materials. Fuel can be contaminated by mixing with other grades or types of fuels, additives, or other material. The greatest single danger to aviation safety from contaminated fuels is contamination resulting from human error. The possibility of human error can never be eliminated, but it can be minimized through good operating procedures, frequent checks, and personnel training.

D. FUEL SYSTEM EQUIPMENT.

1. Strainer. Strainers provide only gross protection for coarse solid contamination. They are usually made of wire mesh screen inside a casing. The only strainer used in Coast Guard fuel systems is installed at the fueling nozzle. It provides a final barrier against introducing particulate contamination into the helicopter fuel system.

2. Filter-Water Separator (Coalescer).

a. This unit both filters particles and separates water from fuel. It is usually a two-stage unit, within one enclosure, in which the first stage acts as a filter and coalescer while the second stage separates the resulting larger droplets from the fuel. The filter should be sized to hold particles of a 5-micron size. The date of the last filter change shall be stenciled on the exterior of the units.

b. The filter elements shall be changed every 3 years, when one million gallons of fuel have been dispensed, or when the differential pressure between the inlet and the outlet side of the filter separator is 15 psi. Recirculate a minimum of 2,000 gallons of fuel through the new elements and ensure that the fuel is clear and bright before placing the system back in service.

CAUTION

FILTER ELEMENTS SHALL BE TESTED IAW ACCEPTED TEST PROCEDURES BEFORE INSTALLATION (SEE NAVSHIPTECHMAN S9086-SP-STM-000, CHAPTER 542).

NOTE

Elements shall also be changed under any of the following conditions:

- A sudden drop in the pressure across the elements
- No increase in the pressure differential after several months of operation (it should increase slowly with use)
- When analysis of downstream samples indicate inadequate filtration of water and/or solids
- When significant quantities of fibrous material are detected downstream of filter and/or separators

3. GO-NO-GO Fuel Monitor.

   a. All Coast Guard shipboard aviation fuel dispensing systems are required to have a GO-NO-GO fuel monitor installed downstream of the last filter and/or separator. The filters within the GO-NO-GO canister are rated at approximately 5 microns, and monitor the fuel for both water and particulate contamination, reducing both to acceptable levels. Fuel flow is reduced as the contaminants accumulate on the filter elements. Small amounts of contamination produce a gradual reduction in the flow of fuel, while large amounts stop the flow of fuel almost immediately.

   b. GO-NO-GO filter elements shall be replaced when the pressure differential across the monitor reaches 20 psi. If a reduction in fuel flow or an increase in differential pressure across the monitor occurs while fueling the helicopter, a sample shall be taken from the helicopter and tested before resuming flight operations.

WARNING

ONLY GO-NO-GO FUEL MONITORS AND FILTER ELEMENTS MEETING MIL-M-81380 (AS) SHALL BE INSTALLED ABOARD COAST GUARD CUTTERS.

WARNING

U.S. NAVY AND NATO VESSELS MAY NOT INCORPORATE THE USE OF GO-NO-GO FILTERS.

4. Static Bonding Cables. Static bonding cables ensure that static charges do not build up that could possibly cause a spark. The helicopter shall be grounded to bare metal on the cutter. The gravity fueling nozzle ground wire shall be connected to the helicopter, before touching the nozzle to the fueling connector.

NOTE

Static discharge wicks on the wheels or airframe cannot be substituted for the required static bonding cables between the helicopter and the cutter.

5. Fuel Hose.

a. Fuel hoses and couplings shall comply with the requirements of EI 1529, or MIL-DTL-26521 (series). Only hoses specifically built for aircraft fuel servicing shall be used in fuel dispensing systems. A minimum of 150 feet of hose shall be permanently stowed on the hose reel.

b. The internal ground of the hose shall be checked upon installation of the hose and at least quarterly thereafter IAW the appropriate Maintenance Procedure Card (MPC).

c. The maximum allowable fuel hose resistance is 1.5 ohms per foot over the entire length of hose, including the nozzle.

CAUTION

USE OF ANTI-LEAK TAPE IS STRICTLY PROHIBITED ON FUEL HOSE AND NOZZLE THREADS DUE TO LOSS OF CONTINUITY AND/OR POSSIBLE FUEL CONTAMINATION.

d. Fuel Hose and HIFR Rig Installation and Annual Testing. Annually and before placing a new JP-5 fueling hose in service or installing an older hose, hydrostatic test and flush the hose IAW the following procedures:

(1) Unpack the hose and visually inspect the hose for damage.

(2) Hydrostatic test the hose and HIFR rig assembly to 150 psi for 10 minutes while inspecting the hose.

(3) After the hydrostatic test, extend the hose to its full length and elevate to drain the water.

(4) Install the hose, place hose on reel with other new hoses or in use hoses, commence flushing. Flush until samples meet the maximum allowed contamination of two milligrams per liter and five parts per million of free water.

(5) The hose is now ready for use.

CAUTION

IF THE ABOVE ACTION IS TAKEN AND THE HOSE STILL DELIVERS A HIGHER THAN ALLOWED CONTAMINATION LEVEL, DO NOT USE FOR FUELING AIRCRAFT.

(6) For more detailed information on hydrostatic hose testing, refer to Naval Engineering Manual, COMDTINST M9000.6 (series), Chapter 505.

e. Fuel Hose Storage and Flushing.

(1) In order to preserve the hose service life, if a fuel hose is not expected to be used for a period of 2 weeks or longer, it shall be stored using one of the following procedures:

(a) Serviceable fuel hose not installed on hose reel:

[1] Completely drain the hose of fuel, flush thoroughly with fresh water, drain, air dry, and cap or connect the ends.

[2] Before its next use, the hose shall be thoroughly flushed with fuel, and the test and inspection procedures set forth in this chapter shall be accomplished.

(b) Installed on hose reel:

[1] Fill the hose with fuel.

[2] Once a week (minimum) flush sufficient fuel to turn over at least twice the volume of all fuel in the hose, piping system, and related equipment.

[3] Before fueling a helicopter, fuel shall be flushed through the hose and tested IAW the procedures set forth in Paragraph 8.F.

[4] If immediate use of a new unused hose is not anticipated, it may be put directly into storage with capped or connected ends.

f. Fuel Hose and HIFR Rig Hose Service Life. Hoses used to transfer fuel to helicopters are subject to deterioration and shall be inspected frequently. Hoses shall be hydrostatically tested annually and replaced every 8 years or earlier if at any time the hose is physically damaged or deterioration is detected.

g. HIFR Rig Storage and Flushing. HIFR rigs shall be stored and flushed IAW the hose flushing procedures outlined in Paragraph 8.D.5.e. above.

6. Fuel Nozzles. All nozzles used to dispense fuel to helicopters shall be of the self-closing type. They shall be of non-sparking construction with an installed 100-mesh screen. Nozzles shall be assembled to the hose with quick disconnect couplings (Figure 8-1 through Figure 8-3). The preferred method of refueling the H-65 or the H-60 is pressure refueling with a single point (under wing) nozzle.

7. Defueling Equipment. The fueling systems onboard Coast Guard cutters were not designed with a defueling capability. A separate pump air-driven portable pump is used to drain fuel from the helicopter. The defueling hoses, pump, and nozzle shall meet the same internal ground continuity requirements as the refueling hose and nozzle that are specified on the cutter AEL.

8. Detector Kits. Each flight deck-equipped cutter shall have onboard, in good operating condition:

a. Contaminated Fuel Detector Kit (AEL MK III)

b. Viewer kit, Free Water Fuel Detector Kit (AEL MK I)

c. B-2 Anti-icing Additive Fuel System Icing Inhibitor (FSII) Test Kit, Including the Operating Manuals

NOTE

The instructions and maintenance procedures published in the operating Manuals for the AEL MK I, AEL MK III, and FSII testers are essential for obtaining accurate test results, and shall be followed exactly.

E. FUEL SYSTEM DESIGN.

1. Overview. The JP-5 fuel system consists of three subsystems consisting of independent plumbing and components.

2. Fill and Storage System. The fill and storage system provides for the bulk storage of JP-5 fuel. The fuel in this system can meet less stringent standards of cleanliness, and shall not be used to refuel helicopters. The system is capable of:

   a. Filling the storage tanks through the fill connector

   b. Circulating the fuel in each storage tank through the transfer filter and/or separator and back to the same tank using the transfer pump (most cutters)

   c. Transferring fuel from one storage tank, through the transfer filter and/or separator, to another storage tank using the transfer pump

   d. Transferring fuel from either storage tank, through the transfer filter and/or separator, to the service tank using the transfer pump

3. Service System. The service system provides clean fuel for refueling helicopters. The system contains a pressure-regulating valve to ensure system pressure does not exceed 55 psi at the nozzle. It is capable of:

   a. Circulating the fuel in the service tank, through the service filter and/or separator, back to the service tank (without going through the hose or GO-NO-GO monitor) using the service pump

   b. Flushing the fuel hose and fueling nozzle with fuel pumped from the service tank, through the service filter and/or separator, then the GO-NO-GO monitor, then the hose and fueling nozzle, and then returning to a storage tank via the fill connector using the service pump

   c. Fueling the helicopter with fuel pumped from the service tank, through the service filter and/or separator, then the GO-NO-GO monitor, and then the fuel hose and fueling nozzle using the service pump

NOTE

Any fuel circulated through the JP-5 hose shall not be discharged into the JP-5 service tanks.

SHIP HOSE

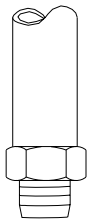

HOSE ASSY, RUBBER GAS $1^1/_2$ IN X 50 FT
WITH INTERNAL GROUND
3 EACH
9C 4720-00-289-1409

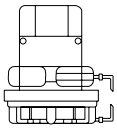

COUPLING HALF
AEROQUIP AE82096P
9C 4730-01-352-9057

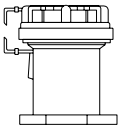

COUPLING HALF, QUICK-DISCONNECT
FOR D-1 NOZZLE
AEROQUIP AE86609R
9C 4930-01-488-9817

NOTE: INCLUDES STRAINER AND RING

STRAINER RETAINING RING
669-225
9Z 5365-00-804-2773

STRAINER
MC 26551-1
9C 4730-00-886-8203

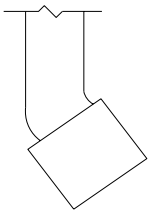

CARTER PRESSURE REFUELING NOZZLE
WITH 55 PSI HOSE END PRESSURE REGULATOR
P/N 64349F5H
9Z 4930-01-385-8991

cg9100114a

Figure 8-1. Pressure Refueling Nozzle Assembly

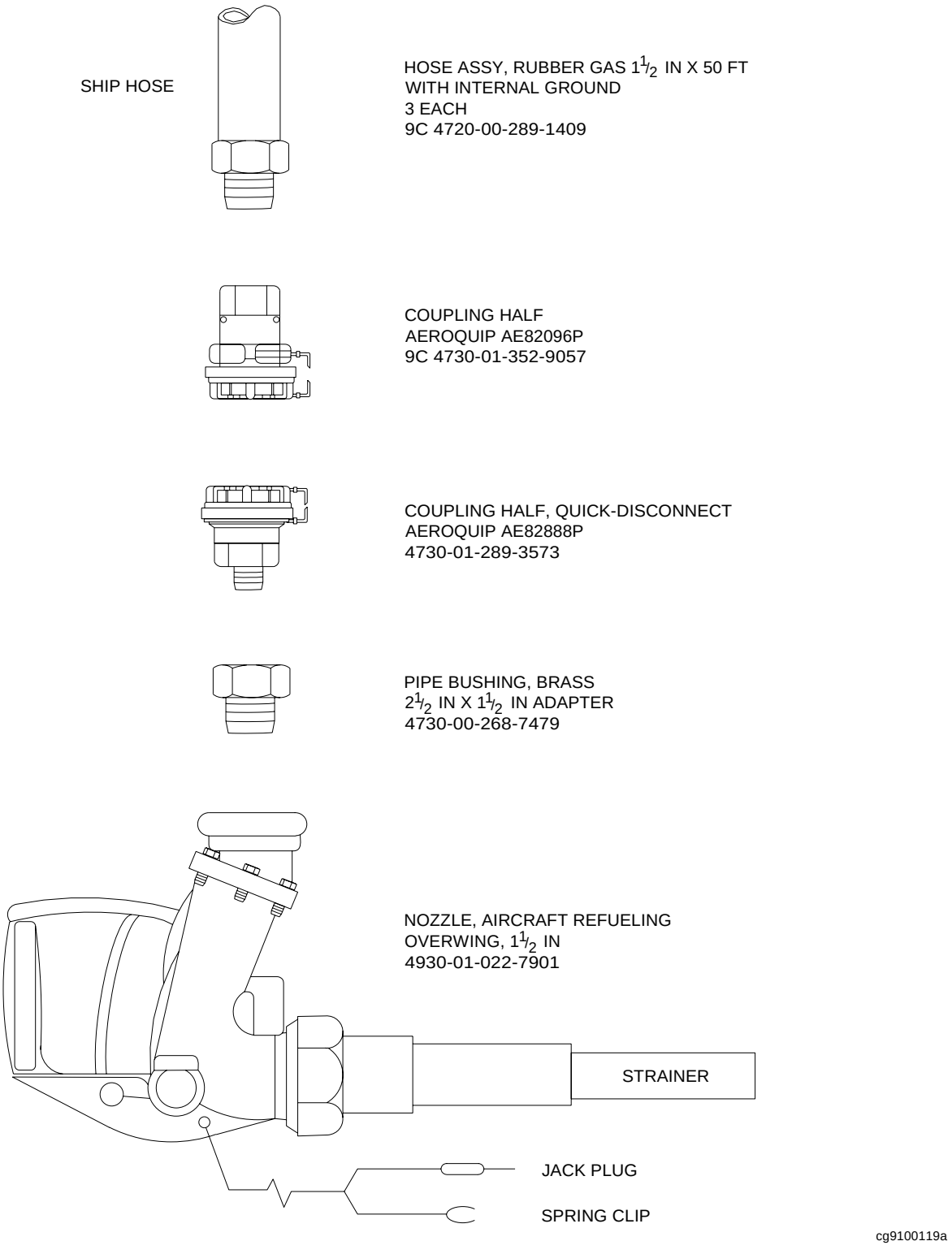

Figure 8-2. Gravity Refueling Nozzle Assembly

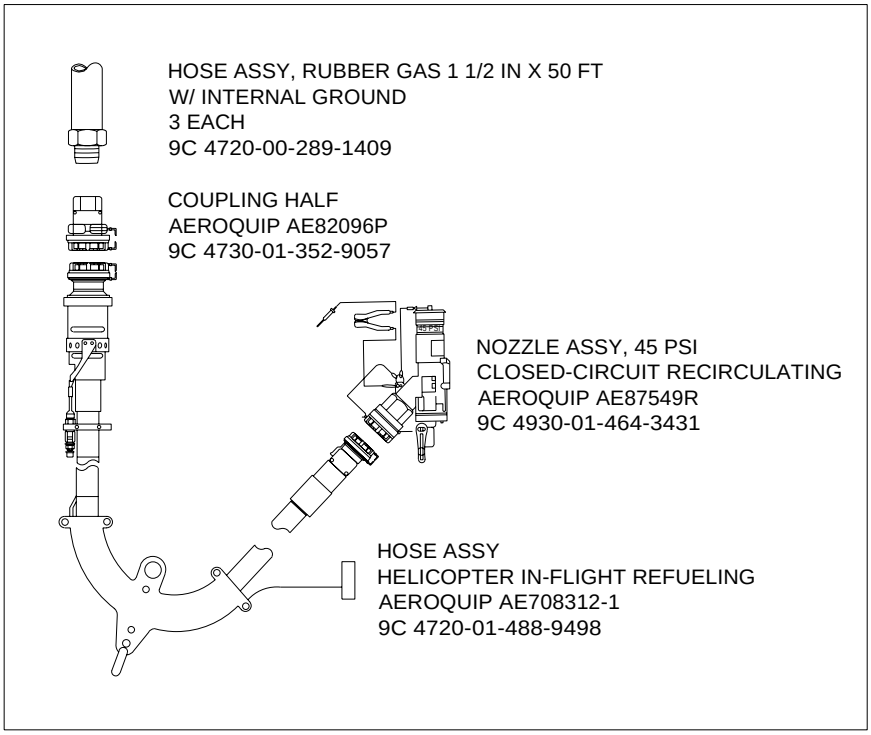

cg9100060a

Figure 8-3. U.S. Coast Guard HIFR Rig Assembly

4. Stripping System. The stripping system provides a means of removing water and particulates that have settled out to the bottom of fuel tanks and other components. It is capable of:

   a. Stripping the storage tanks into the drain tank using a stripping pump

   b. Stripping the service tank(s) into the drain tank using a stripping pump

   c. Stripping the filter and/or separators into the drain tank using a stripping pump

   d. Emptying the drain tank using a stripping pump

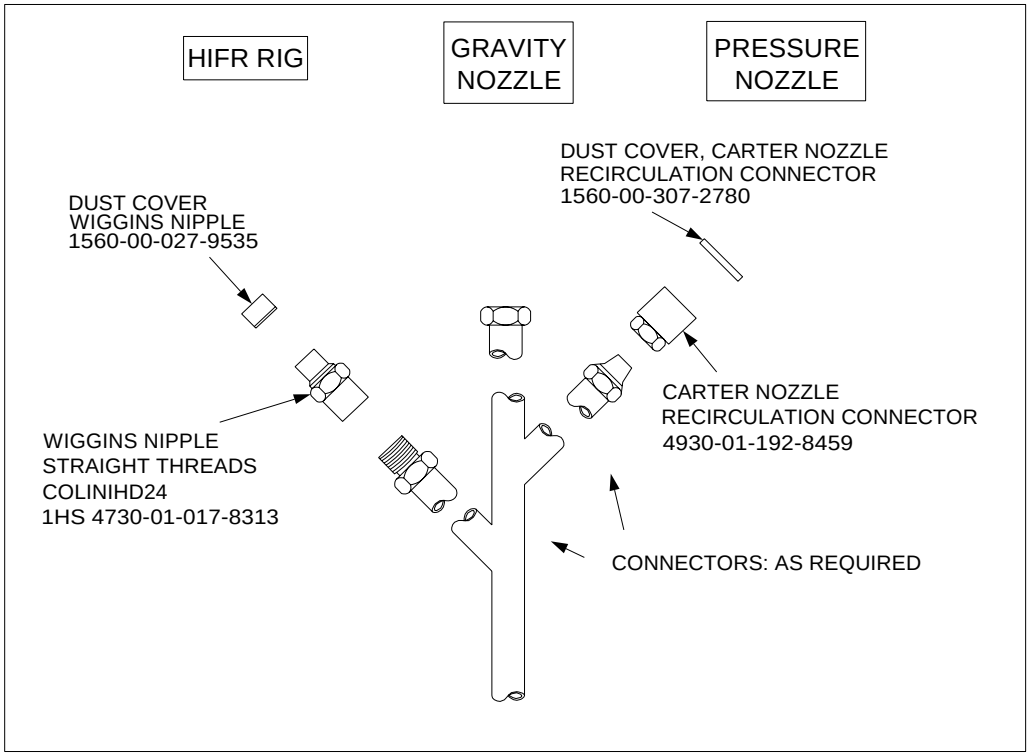

cg9100061a

Figure 8-4. JP-5 Flushing Tree Assembly

WARNING

AN INSTRUCTION PLATE AND A DIAGRAM SPECIFYING THE PROPER SYSTEM ALIGNMENT SHALL BE PERMANENTLY MOUNTED IN THE JP-5 PUMP ROOM. ANY DEVIATIONS FROM THIS ALIGNMENT SHALL BE APPROVED BY THE CO.

WARNING

THE JP-5 SYSTEM MAY CONTAIN PIPING THAT BYPASSES THE TRANSFER AND/OR SERVICE FILTER/SEPARATORS, OR GO-NO-GO MONITOR, OR CROSS-CONNECTS THE STORAGE, FILL, AND TRANSFER SYSTEMS WITH THE SERVICE SYSTEM. THESE BYPASSES AND/OR CROSS CONNECTIONS SHALL NOT BE OPENED DURING HELICOPTER FUELING EXCEPT BY PERMISSION OF THE CO.

WARNING

THE JP-5 SYSTEM IS POSITIVELY SEPARATED FROM ALL OTHER SYSTEMS, EITHER BY REMOVED SECTIONS OF PIPING OR BY INSTALLED IN-LINE BLANKING FLANGES. THE SYSTEM SHALL NOT BE RECONNECTED TO ANY OTHER SYSTEM EXCEPT FOR THE PURPOSE OF TRANSFERRING FUEL FROM THE JP-5 SYSTEM TO THAT OTHER SYSTEM.

NOTE

Where system design permits, gravity stripping is an acceptable alternative to stripping by use of a pump.

F. FUEL TESTS AND INSPECTIONS.

1. Overview.

   a. To ensure a good fuel quality control program, three specific types of tests and inspections shall be conducted:

      (1) Visual inspections.

      (2) Detector kit tests.

      (3) Laboratory analysis.

   b. The following paragraphs describe these tests and inspections in detail. Table 8-1 and Table 8-2 outline contamination, water, and sediment limits for JP-5 aviation fuel.

2. Fuel Sampling Procedures.

   a. The proper sampling of aviation fuels is as important to quality surveillance as proper testing. Improper containers and poorly drawn or mishandled samples can cause clear and bright tests, detector kit tests, or laboratory analysis to be meaningless, or misleading. The person assigned to take these samples shall be trained, experienced, competent, and conscientious.

   b. To conduct a clear and bright test, or to gather fuel samples for detector kit tests, or laboratory analysis, the following procedures shall be used:

      (1) Use a clean glass container or laboratory beaker from 1 quart to 1 gallon in size. The bottle should be round, with a relatively flat bottom, and should be as clean as possible.

      (2) Use only clean, lint-free wiping cloths, funnels, and other items to ensure representative samples are obtained.

      (3) Clean the nozzle or sampling valve of any contamination.

      (4) Rinse the sample bottle thoroughly with the type of fuel sampled before drawing the sample for the test and/or inspection.

      (5) Draw the sample at the highest flow rate possible, avoiding spills and splashing.

(6) Cap or cover the samples to prevent contamination.

WARNING
EYE PROTECTION SHALL BE WORN TO PREVENT FUEL FROM SPLASHING INTO THE EYES.

3. Fuel Visual Inspections (Clear and Bright Tests).

a. Fuel delivered to the aircraft must be clear, bright, and contain no free water.

(1) "Clear" means the absence of any cloud, emulsion, readily visible particulate matter, or entrained water.

(2) "Bright" refers to the shiny appearance of clean, dry fuels.

(3) The terms "clear" and "bright" are independent of natural color of the fuel. Jet fuels are not dyed and may be any color from clear to amber.

b. Ordinarily, a cloud or haze in fuel indicates the presence of water. Occasionally, a cloud denotes excessive amounts of fine particulate matter or finely dispersed stabilized emulsion. Fuel containing a cloud from either cause is not acceptable. If a light cloud forms when "clear and bright" fuel cools, it indicates that dissolved water has precipitated out. This "precipitation cloud" represents a very slight amount of fresh water. Even this slight amount is not acceptable in fuel to be delivered to a helicopter.

c. A "precipitation cloud" can be removed by a properly operating filter and/or separator. The fuel should be drained back upstream of the filter and/or separator and recirculated to remove the cloud. Any cloud that persists in spite of recirculating the fuel must be presumed to indicate a failure or malfunction of the filter and/or separators, a source of contamination downstream of the filter and/or separator, or an improperly cleaned sample container.

d. Clear and Bright Test. The clear and bright test shall be conducted as follows:

(1) Immediately before and after each helicopter refueling with samples taken from the refueling nozzle. If there has been no change to the fuel hose or nozzle, the clear and bright test taken during morning tests may be used as initial clear and bright for first fueling of the day. Cutters SHALL retain a labeled fuel sample for every aircraft fueled until it has been verified the aircraft has refueled.

Example (1): You have aircraft 1 attached to your cutter. You fuel aircraft 1, take a clear and bright sample (sample A). You then launch aircraft 1 on patrol. Now aircraft (2) arrives and requests fuel. You fuel aircraft 2, take another clear and bright (sample B). You now SHALL retain sample A for aircraft 1 and sample B for aircraft 2, each sample separately until each aircraft is refueled.

(2) After each recirculation of fuel, with a sample taken from the appropriate tank.

(3) After replacement of or maintenance on any system component (including nozzle swap out), with a sample taken from downstream of the component.

(4) At any time when fuel condition is suspect, with a sample taken from the suspected source.

e. Clear and Bright Test Procedure.

(1) Check the sample for proper color and visible contamination.

(2) Swirl the sample to form a vortex. All free water and sediment that has settled will accumulate beneath the vortex.

(3) When a sample is being examined, move the bottle around so that the background light is varied.

(4) If a sample shows dirt and/or water, clean the bottle and filling equipment, flush the hose, and conduct the test again.

(a) Refueling clear and bright tests shall be conducted and the results reported to the aircraft within 5 minutes from the time the aircraft departed the cutter.

WARNING
FUEL THAT PRODUCES SAMPLES THAT ARE CLOUDY, HAZY, OR CONTAIN SEDIMENT SHALL NOT BE USED IN HELICOPTERS.

Table 8-1. VISUAL (CLEAR AND BRIGHT) INSPECTION OF JP-5 FUEL

Appearance	Contaminant	Characteristics	Effect on Aircraft
Not visible	Dissolved water	Fresh water only. Precipitates out as a cloud when the fuel is cooled.	None. Unless precipitated out by cooling; then the same as entrained water.
Light haze or cloud, May not be visible	Entrained water	Tiny droplets of water suspended in the fuel; usually caused when a slug of water in the fuel is violently agitated, such as when passing through a pump. May settle out over time.	Icing of fuel system; usually low pressure fuel filters. Erratic fuel quantity indications.
Droplets adhering to the sides of the bottle. Large amounts settled in the bottom	Free water	May be salt or freshwater. The presence of a cloud indicates entrained water.	Same as entrained water. Gross amounts can cause engine flameout. Saltwater can cause corrosion of fuel system components.

Table 8-1. VISUAL (CLEAR AND BRIGHT) INSPECTION OF JP-5 FUEL Continued

Red or black powder, rouge, or grains. May appear as a dye-like material in the fuel	Rust	Red rust is considered to be nonmagnetic; black rust magnetic. Rust is generally the leading source of particulate contamination.	Can cause fuel controls, flow dividers, pumps, nozzles, etc., to clog, stick, or otherwise malfunction.
Crystalline, granular, or glass-like	Sand or dust	Usually found with other contaminants. Very lightweight: floats or “swims” in the fuel longer than water droplets or particulates. Develops only when free water is present.	Fouls fuel quantity indicator probes, flow dividers, fuel controls, etc. Clogs fuel filters, and may cause engine flameout.
Cloud in fuel	Air bubbles	Cloud dispenses upwards in a seconds.	None.
White or gray powder or paste	Aluminum or magnesium compounds	Sometimes very sticky or gelatinous when present with water. Frequently present.	Same as rust.
Red, brown, gray or black sticky material, variously described as gelatinous, gummy, or like catsup or mayonnaise	Stabilized emulsion	Entrained water with rust or microbiological growth that stabilizes or “firms” the emulsion. Will adhere to most materials it comes in contact. Usually present as “globules” or stringy, fibrous material in either clear or cloudy fuel. May stand indefinitely without settling.	Same as free water, rust, and microbiological growth, except more drastic.
Lacy suds or scum at interface between fuel and water. Sometimes resembles jellyfish. In large concentrations, color may appear tan to dark brown	Surfactants	Soap or detergent-like materials that occur naturally in fuel, or are introduced in the refining process. They help suspend contaminants in the fuel, and can coat filter elements, rendering them ineffective.	Same as free water, rust, and microbiological growth.

Table 8-2. MAXIMUM SEDIMENT AND FREE WATER LIMITS AS MEASURED BY DETECTOR KIT TESTS

SEDIMENT, FREE WATER, AND FSII USE LIMITS				
From	**To**	**Sediment (Max) (mg/1)**	**Free Water (Max) (ppm)**	**FSII (% by vol)**
Supply Source	Storage Tank	10.0	30	0.10 - 0.15
Dispensing	Aircraft	2.0 (See Note)	5	0.10 - 0.15

NOTE

Solid contaminants can be held well below the one mg/liter level in a properly functioning fuel distribution system. If solid contaminants in the aircraft fuel dispensing points exceed one mg/liter, notify the Engineering Officer, investigate, and take corrective action to improve the fuels quality.

4. Detector Kit Tests.

   a. Frequent spot checks of the fuel system with the AEL MK I, AEL MK III and FSII detector kits are important for maintaining high-quality fuel.

   b. Detector Test Frequency. Detector kit tests shall be conducted at the following times:

      (1) When replenishing the storage tanks. Take a sample from the delivery source before onloading fuel on the cutter.

      (2) When operating with an aircraft:

         (a) Daily: Sample from the fueling nozzle, before the first fueling (except FSII).

         (b) The service tank is refilled or topped off: Sample from the fueling nozzle, before the next fueling (except FSII).

         (c) Weekly: FSII test on a sample from the fueling nozzle.

      (3) When not operating with an aircraft: weekly, with a sample from the fueling nozzle (after recirculating the service tank).

      (4) Weekly: Sample each service tank (after recirculation).

      (5) Weekly: Sample each storage tank (after recirculation).

      (6) After replacement of or maintenance on any system component (except immediate nozzle swap out) with a sample taken downstream of the component.

      (7) Any time when fuel condition is suspect: with a sample taken from the suspect source.

(8) Any time samples are drawn for laboratory analysis. At least one duplicate sample for processing through the Contaminated Fuel Detector (CFD) and one duplicate sample for processing with the B2 refractometer shall be drawn and tested each time samples are drawn for submission to the laboratory for analysis. The duplicate samples shall be used to verify unit testing procedures and equipment described later in this chapter.

WARNING
IN THE EVENT THAT THE DETECTOR KIT TESTS CANNOT BE PERFORMED, AN AIRCRAFT SHALL NOT BE FUELED.

5. Heading and Calibration Chart. To use the chart, first obtain the milliamp difference produced from the millipore filters used for the test. Enter the difference on the "Change in Reading, Milliamps" column on the left-hand side of the calibration chart. Move horizontally to the right of the chart, intersecting the diagonal calibration curve line. At that point move vertically down to obtain the milligrams per liter of particulate matter in the fuel. Granted, most of your numbers are going to be extremely low but will never be zero. Using the calibration curve correctly is important for ensuring correct fuel particulate matter is being obtained and for achieving accurate results for comparison testing with lab results.

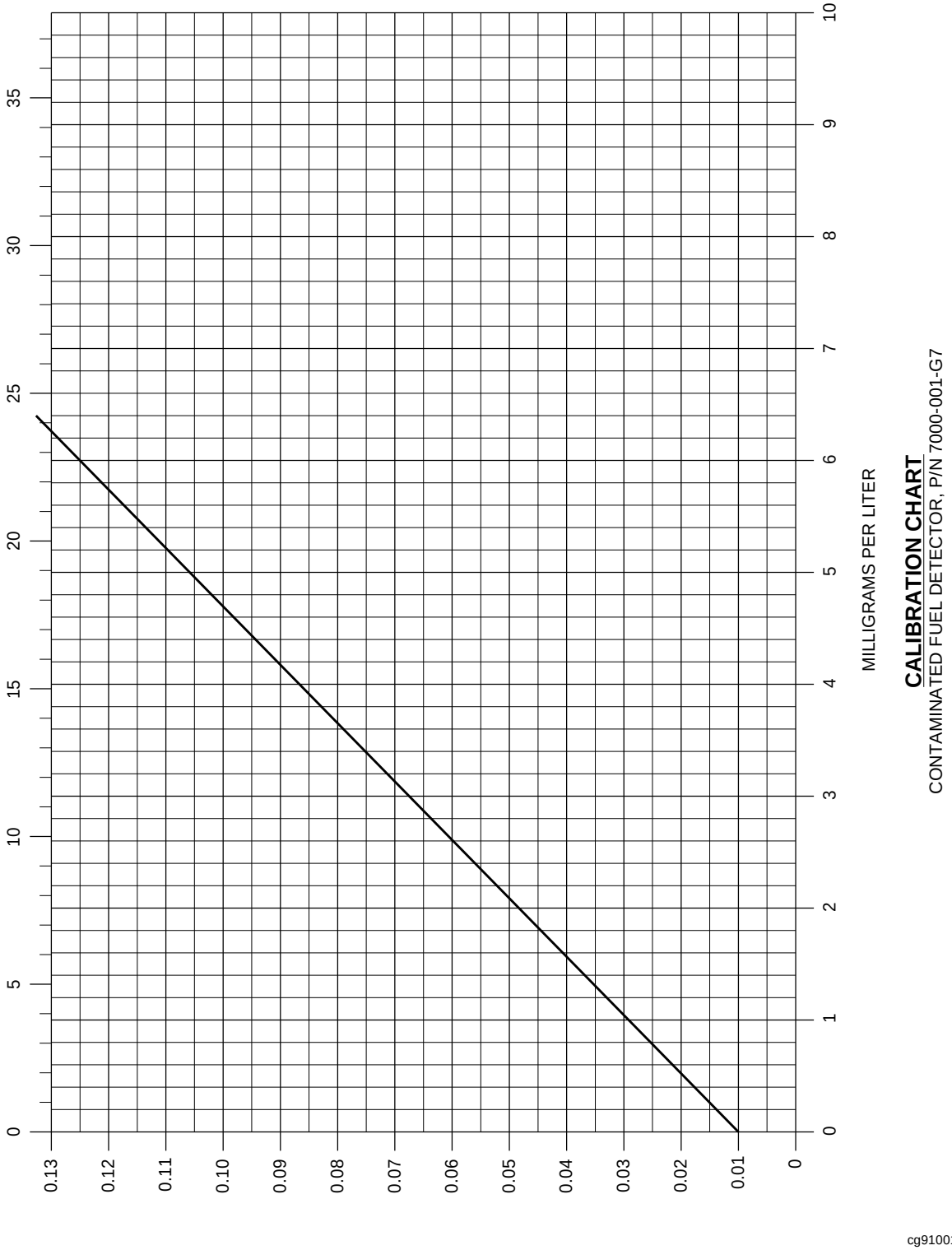

Figure 8-5. Calibration Chart

6. Laboratory Analysis. Laboratory analysis of fuel samples serves two purposes: to validate the results of the shipboard tests/test kits and to provide a test for the fuel's flash point. Upon receipt of Quarterly Lab Analysis, review and verify flash point and compare with minimum flash point (140 F) for JP-5. If flash point is out of range for JP-5, then fuel other than JP-5 is onboard and should be transferred off the cutter immediately.

   a. Minimum Laboratory Analysis Schedule. Samples shall be taken for laboratory analysis as follows:

      (1) Immediately after replenishing the storage tanks.. Sample each storage tank.

      (2) Quarterly. Sample each service tank through the fueling nozzle and the storage tanks.

CAUTION

EVERY ATTEMPT SHALL BE MADE TO CONFORM TO THE LABORATORY ANALYSIS TESTING SCHEDULE. IF A CUTTER IS UNABLE TO SUBMIT SAMPLES DUE TO AN EXTENDED UNDERWAY PERIOD, THEY SHALL BE SUBMITTED AT THE FIRST OPPORTUNITY (PORT CALL OR OUTGOING MAIL SERVICE).

   b. Minimum Laboratory Analysis Requirements. The following tests shall be requested when submitting samples for laboratory analysis:

      (1) Sediment content

      (2) Flash point

      (3) FSII

   c. Verifying Test Kit Results.

      (1) Each unit shall take duplicate samples to verify that unit testing procedures and equipment are functioning properly. The routine samples described shall be sent to the laboratory for analysis and matching samples tested through the unit's (cutter) equipment. Each facility shall test, record, and compare results of the (CFD) test and the B2 refractometer FSII test. The difference between the laboratory results and the unit results shall fall within the following limits:

         (a) Sediment content: No action is necessary unless the differences between the two results are greater than 0.8 mg/l.

         (b) FSII: Variation by as much as 0.03 percentage points is considered acceptable.

NOTE

Cutters receiving JP-5 shall ensure the fuel meets all applicable MIL specs. The above tolerances do not apply to receiving fuel.

(2) Results outside of the limits require corrective measures to the facility equipment and/or facility sampling procedures. Verification retesting shall be conducted during the next routine or quarterly sampling, whichever comes first.

(3) As an immediate comparison measure, if equipment test results are suspect, duplicate samples may be verified at other facilities with like equipment. Comparison testing at facilities other than authorized fuel testing laboratories is an interim testing measure. Requirements for quarterly and routine fuel laboratory verification testing shall be conducted as scheduled.

d. Correlation Sampling Procedures. The following procedures shall be used to take and process each duplicate set of samples:

(1) Draw three identical samples from the same tank one immediately after the other. Tank selection is not important for the three identical samples. One sample is used for the unit CFD test, another for the unit B2 test, and the third for submission to the fuel testing laboratory. Take appropriate measures to positively identify each sample if other samples are to be drawn.

(2) Process one of the three identical samples through the unit's CFD and one through the unit's B2 refractometer. Record the results in the Fuel Maintenance Log, Figure 8-6.

(3) When recording the results in the log, identify the unit test results of the CFD and B2 tests with the same serial number of the matching sample sent to the laboratory.

(4) When results from the laboratory are returned, record them in the log next to the corresponding sample. Compare the results by obtaining the difference of results between the unit test and the laboratory test. If the differences are within the allowed limits as stated, no further action is necessary.

e. Additional Sampling Procedures. Gather fuel samples for laboratory analysis using the procedures outlined in this chapter, as well as the following:

(1) Glass sampling bottles having nonmetallic caps shall be used. Inner cap seals should not contain wax, paraffin, corrosive metal, or other material liable to contaminate the fuel (ensure bottles are clean and dry).

(2) Leave at least 1/2 inch of expansion space in each container when drawing the samples. Do not top off the containers.

(3) Cap and mark the container immediately.

(4) Protect the sample from light.

f. Sampling Equipment. The following aviation fuel sampling and shipping containers conforming to MIL-K-23714 (WEP) are available in the supply system. These sampling kits meet all the requirements for shipment of aviation fuels by military and commercial transportation.

(1) Fuel Sampling Kit, complete (NSN 8115-00-719-4111).

(2) Top and bottom cushioning (inner pack) (8115-00-719-4825).

(3) Replacement Kit containing four sample tags and four glass sample bottles, 32 oz. size (NSN 8115-00-717-8572).

(4) Bottles, glass sample (NSN 8125-00-378-9994).

g. Marking Instructions. Proper identification and accurate records of samples are necessary so the test results may be correlated with the samples submitted. The following is a suggested guide for sample identification and labeling.

(1) Sample serial number (locally assigned).

(2) Type of fuel (JP-5).

(3) Name and mailing address of the cutter.

(4) Date the sample was taken.

(5) Where the sample was drawn (tank number, nozzle, etc.).

(6) Quantity of fuel represented, if applicable.

(7) Classification of the sample (routine or special).

(8) Name of the person taking sample and remarks.

NOTE

An example of a routine sample would be a periodic sample taken as part of a quality surveillance program. Special samples are those that are submitted for testing because the quality of the fuel is suspect, either as the result of a helicopter malfunction or other reasons.

h. Shipping Instructions. Samples are to be forwarded to appropriate testing facilities by the most expeditious means. A listing of these facilities is contained in NAVAIR 00-80T-122. Samples may be delivered to the laboratory by hand when feasible. Otherwise, samples in amounts up to 10 gallons may be shipped. Samples shipped by military aircraft shall be packed IAW the requirements of the Joint Publication for Packaging and Handling of Dangerous Material for Transportation by Military Aircraft (AFM 71-4/DASM 4145.3/TM 38-250/NAVSUP PUB 5051/MC P 4030.19). The sampling kit listed in this chapter meets these requirements.

7. Hose Inspection.

   a. Hose inspections shall be performed weekly if an aircraft is on the cutter and monthly at other times. Cutters operating in area with high volume of aircraft with potential need of fuel SHALL complete weekly hose inspections. The inspections shall be completed during daylight hours. The weekly or monthly inspection shall be performed IAW the Auxiliary Department monthly MPC and the following:

      (1) Nozzle screens shall be inspected before the first fueling operation of the day. If helicopter operations are not being conducted, the screens shall be checked every time after fuel is pumped through the hose.

      (2) Contaminants found on the screen should be examined closely to determine their source. On new hoses, particles of rubber left in the hose during manufacture may appear for a brief period after the hose is placed in service. However, if particles continue to appear on the screen after several inspections, the hose shall be considered defective and replaced.

   b. Hose continuity shall be checked quarterly IAW the appropriate MPC.

G. FUEL MAINTENANCE PROCEDURES.

1. Overview. No single step or process can ensure product cleanliness. Fuel cleanup must be a continuous and progressive operation from the refinery to the helicopter, using all cleanup steps so that if one step fails, successive steps in the operation will ensure fuel cleanliness.

2. Receiving Fuel. The procedures listed shall be used when receiving JP-5 fuel from a supplier.

   a. Strip all cutter tanks of free water before starting.

   b. Verify the flash point of the fuel by testing or by examining the laboratory analysis provided by the carrier.

   c. Leave the fuel carrier stationary at the unloading point for at least 10 minutes before onloading fuel to permit water and particulates to settle.

   d. Electrically bond the cutter to the carrier.

   e. Provide fire protection as required by Chapter 8 and other pertinent regulations.

   f. Check for and drain off any free water from the carrier.

   g. Take fuel samples as outlined in Chapter 8, conduct a “clear and bright” test, evaluating the results IAW Table 8-1.

   h. Test fuel for contamination with the AEL MK III and AEL MK I detector kits as required by Chapter 8. If the test results are not within the limits specified in Table 8-2, the fuel should not be transferred into the cutter’s tanks.

   i. Ship samples for laboratory analysis IAW Paragraph 8.F.

j. Check all fittings to ensure that no contamination will be introduced into the system.

k. Commence refueling.

WARNING

IF THE FLASH POINT OF THE FUEL CANNOT BE VERIFIED OR THERE IS REASON TO SUSPECT THAT IT MIGHT NOT BE AT LEAST 140 °F, THE FUEL SHALL NOT BE TAKEN ONBOARD.

NOTE

Cutters receiving JP-5 shall ensure that the fuel meets all applicable MIL specs. All previous tolerances are not applicable.

3. Maintaining Fuel. Once the fuel is in the cutter's aviation fuel system, it shall be systematically maintained. The following guidelines shall be followed:

a. Fuel Settling. After receipt of the fuel, allow at least 3 hours of settling time per foot of fuel depth above the stripping line, then strip the tanks of water.

b. Fuel Stripping. When a helicopter is onboard or helicopter operations are anticipated, strip the service tank daily before recirculation. Strip all tanks weekly when the cutter is in port, before recirculation. At sea, increased frequency may be necessary when fuel testing shows an increase in the amount of free water. Strip the storage tanks weekly before recirculating and anytime before transferring fuel to the service tank.

c. Fuel Filtration. If the filter and/or separators are functioning properly, contaminated fuel may be cleaned by recirculation.

d. Fuel Recirculation. When a helicopter is onboard or helicopter operations are anticipated, recirculate the service tank(s) contents through the service system filter and/or separator daily. At other times, recirculate weekly.

(1) Recirculate the storage tank contents through the transfer system filter/separators weekly.

(2) Ensure that all water is drained from the separators.

(3) Record the pressure drop across the filter/separators during each recirculation, while at rated flow, to monitor the system for any radical change.

(4) If the pressure drop decreases, the elements have likely failed and should be replaced.

(5) Fuel shall be maintained at the MK I and MK III standards set forth in Table 8-2.

e. Fuel Storage Time Limits. There is no practical limit as to how long JP-5 fuel can be stored on a cutter provided it is kept free of contaminants.

However, fuel stored with water in it will eventually lose part or all of its FSII content and become unusable.

f. Fuel Records and Logs.

(1) Accurate records of fuel quantity, condition, and age shall be maintained. Complete and accurate operating logs for all phases of the fuel handling system should be developed to fit the needs of each particular operation. Entries in these logs shall include the daily, monthly, and quarterly checks and information pertaining to facility maintenance, fuel receipts, inventory, and delivery.

(2) Figure 8-6 is the required JP-5 Fuel Maintenance Log which covers all requirements of this chapter. Requirements not covered on the front of Figure 8-6 shall be logged chronologically on the back.

4. Fuel System Icing Inhibitor (FSII).

a. JP-5 fuel obtained from military sources normally contains FSII. The only material currently authorized for use is di-ethylene glycol monomethyl ether (diEGME). It lowers the freezing point of small quantities of free water in the fuel. This prevents the formation of ice that can clog filter elements and cause engine failure due to fuel starvation. The inhibitor also restricts bacterial growth in fuel systems.

b. Water removes FSII from fuel; therefore, introduction of water into a fuel system shall be avoided and free water shall be removed at any point it can accumulate. **THE USE OF FSII IS MANDATORY**. The required level of FSII for Coast Guard aircraft is between 0.10 percent and 0.15 percent by volume.

WARNING

FSII IS MUTAGENIC. DO NOT PERMIT FUEL SPILLS TO DRY ON THE SKIN OR CLOTHING. FUEL-SPLASHED CLOTHING SHOULD BE REMOVED IMMEDIATELY AND AFFECTED SKIN AREAS SHOULD BE WASHED WITH SOAP AND WATER. SHIPBOARD INJECTION OF FSII IS PROHIBITED.

NOTE

If shipboard FSII falls below the acceptable limit of 0.10%, aircrews may add MIL-I-27686E (commercial name PRIST) to the helicopter fuel system.

MONTH_____ **YEAR**_____ **(#: numerical entry required)**

DAY		1	2	3	4	5	6	7	8	9	10	11	12
DAILY: if helo aboard or ops planned, **WEEKLY:** otherwise:													
1. Check JP-5 fuel tank vents for obstructions.													
2. Check areas for fire hazards.													
3. Strip service tank(s).													
4. Recirculate service tank(s).													
a. Service filter differential pressure. #													
b. Service pump discharge pressure. #													
5. Flush hose & nozzle. (50 gallons minimum)													
a. GO-NO-GO monitor differential press. #													
b. Discharge pressure at fuel station. #													
6. Visually check pressurized system for leaks.													
7. Test service tank fuel from nozzle.													
a. Clear and bright (check)	Single or Port Tank												
	Stbd Tank												
b. Solid contamination (MK III) (Mg/L).	Single or Port Tank #												
	Stbd Tank #												
c. Free water contamin (MK I) (PPM).	Single or Port Tank #												
	Stbd Tank #												
d. FSII (WEEKLY) Percent by volume	Single or Port Tank #												
	Stbd Tank #												
8. Quantity in service tank(s) (gal).	Single or Port Tank #												
	Stbd Tank #												
9. Strip service filter/separator.													
10. Check nozzle strainers.													
WEEKLY:													
1. Strip storage tanks.													
2. Recirculate storage tanks.													
a. Filter/separator differential pressure.													
b. Transfer pump discharge pressure. #													
3. Strip transfer filter/separator.													
4. Test storage tank fuel.													
a. Clear and bright (check)	Port Tank												
	Stbd Tank												
b. Solid contamination (MK III) (Mg/L).	Port Tank #												
	Stbd Tank #												
c. Free water contamin (MK I) (PPM).	Port Tank #												
	Stbd Tank #												
d. FSII Percent by volume	Port Tank #												
	Stbd Tank #												
5. Quantity in storage tanks. (gal)	Port Tank #												
	Stbd Tank #												
6. Total aviation fuel (including service tank(s)).#													
Inspect fuel hose: **WEEKLY:** helo aboard / ops planned, **MONTHLY:** otherwise													
QUARTERLY:													
1. Service and storage tank fuel samples to lab.	Note Date:												
2. Check exposed piping for paint and corrosion.	Note Date:												
3. Check fuel equipment for electrical continuity.	Note Date:												
AS REQUIRED: Replace fuel hose.	Note Date:												

Figure 8-6. (Sheet 1 of 2)

MONTH_____ **YEAR**_____ **(#: numerical entry required)**

DAY	13	14	15	16	17	18	19	20	21	22	23	24	25	26	27	28	29	30	31
DLY, WKLY																			
1.																			
2.																			
3.																			
4.																			
a. #																			
b. #																			
5.																			
a. #																			
b. #																			
6.																			
7.																			
a.																			
b. #																			
#																			
c. #																			
#																			
d. #																			
#																			
8. #																			
#																			
9.																			
10.																			
WKLY:																			
1.																			
2.																			
a. #																			
b. #																			
3.																			
4.																			
a.																			
b. #																			
#																			
c. #																			
#																			
d. #																			
#																			
5. #																			
#																			
6. #																			
WKLY / MONTH																			

FUEL TEST EQUIPMENT CORRELATION LOG:

DATE	TYPE TEST (B2 / CFD)	SAMPLE SER #	SOURCE OF SAMPLE	COMPARISON TEST LOCATION	FACILITY RESULTS	COMPARISON TEST RESULTS	RESULT DIFFERENCE Solids-0.8Mg/l (max) FSII-0.03% (max)
EXAMPLE	CFD	00-0201	4-109-2-J	FUEL LAB	0.1 mg / l	0.4 mg / l	0.3 mg / l
EXAMPLE	B2 FSII	00-0201	4-109-2-J	OTHER FACILITY	0.18 %	0.16 %	0.02 %

Figure 8-6. (Sheet 2 of 2)
JP-5 Fuel Maintenance Log

5. Fuel Tank Cleaning. When it is necessary to clean the tanks for maintenance or to remove contamination, the following procedures in Figure 8-6 shall be used:

   a. Drain the fuel from the tank as thoroughly as possible.

   b. Wash the tank with high-pressure cold fresh water before it has a chance to dry. Do not use steam as it can damage the tank's coating.

   c. Drain and dry the tank using the stripping system or a portable air-driven pump. When dry, close the tank and refill it with JP-5 fuel.

   d. Recirculate the fuel until it is clear and bright and passes the MK I and MK III detector kit tests.

   e. Flush all lines, pipes, and fittings before placing the JP-5 system back in service.

WARNING

BEFORE ENTERING ANY TANK, PERMISSION SHALL BE OBTAINED FROM THE ENGINEERING OFFICER, AND THE TANK MUST BE CONFIRMED TO BE FREE OF TOXIC VAPORS. USE OF THE PROPER RESPIRATORY EQUIPMENT IS MANDATORY, AND A SAFETY OBSERVER SHALL BE STANDING BY AT THE TANK MANHOLE IN CASE OF EMERGENCIES.

WARNING

DO NOT USE THE SERVICE OR TRANSFER SYSTEMS TO DRAIN THE WATER FROM THE TANK. EXCESSIVE FUEL CONTAMINATION WILL RESULT.

CAUTION

TO AVOID OVER-PRESSURIZATION OF THE H-60 FUEL SYSTEM, STATIC PRESSURE REFUELING SHOULD TAKE PLACE WITH THE CUTTER'S 400 HZ/115 VAC POWER APPLIED.

CAUTION

DURING APU-ASSISTED HOT REFUELING, THE APU IS A POTENTIAL FUEL IGNITION SOURCE.

H. FUEL SAFETY PRECAUTIONS.

1. General Procedures.

   a. Keep all unnecessary personnel clear of the area during all fuel handling operations.

   b. Prohibit smoking in the hangar and on weather decks during topside fuel handling (any refueling operations or flushing through the hose/tree), and at all times in the JP-5 pump room.

c. Beware of flammable vapors in empty tanks and other compartments.

d. Goggles and rubber gloves shall be worn during fuel sampling, testing, fueling, and defueling operations.

e. Do not carry “strike anywhere” matches.

f. Remove all articles from pockets that might fall into an open tank.

2. Explosive Safety.

a. The presence of flammable liquid and/or explosive materials is not permitted within 25 feet of the flight deck peripheral lines, on any weather deck, during flight operations. Below the helicopter approach path, ready service lockers or magazines should not be located on exposed decks.

b. The Helicopter Operations Bill shall specify that all flammable liquid and/or ammunition stored in this area shall be moved before flight operations.

3. Benzene Exposure. Personnel may be exposed to benzene in the pure chemical form or as a component of another substance such as aviation fuel.

a. Avoid breathing fuel vapors.

b. If dizziness occurs from breathing vapors, get the victim to fresh air immediately, and obtain medical attention.

c. Repeated or prolonged exposure to benzene, even at relatively low concentrations, has been associated with various blood disorders ranging from anemia to leukemia.

d. The Occupational Safety and Health Administration (OSHA) has promulgated comprehensive benzene exposure standards (29 CFR, Subpart Z, section 1910, 1028).

e. When exposed to JP-5, the following levels of protection shall be used:

(1) Less than or equal to 10 parts per million (PPM): Half mask air purifying respirator with organic vapor cartridge.

(2) Less than or equal to 50 PPM: Full facepiece air purifying respirator with organic vapor cartridge.

(3) Less than or equal to 100 PPM: Full facepiece powered air purifying respirator with organic vapor cartridges.

(4) Less than or equal to 1000 PPM: Full facepiece supplied air respirator in positive pressure mode.

(5) Greater than 1000 PPM or unknown concentration: Full facepiece self-contained breathing apparatus (SCBA) in positive pressure mode.

4. Radio Frequency (RF) Radiation Hazards. Due to the potentially disastrous consequences of an RF emission creating an electrical arc, the following guidelines shall be followed during all on-deck fueling and HIFR operations, and anytime the nature of helicopter maintenance makes it prudent to take positive action to prevent the possibility of electrical arcing:

a. No emissions are permitted at power levels greater than rated transmitter power.

b. No emissions from shipboard transmitters are permitted through antennas located within 25 feet of a helicopter.

c. No emissions from shipboard transmitters with a rated power output equal to or greater than 500 watts are permitted through antennas located within 50 feet of a helicopter.

d. Shipboard radar antennas capable of main beam illumination of the helicopter shall be secured. (Other radar antennas may be energized, if required.)

e. The helicopter's emissions control shall be IAW each aircraft's flight Manual.

5. Static and Electrical Discharge Prevention.

a. Static bonding cables shall be attached only to specified grounding points on helicopters. Do not attach them to radio antennas, drains, hydraulic lines, or access doors. Do not attach them to surfaces on the landing gear other than those specified in order to avoid scratches and gouges on high strength steel parts.

b. Do not connect or disconnect batteries during fueling.

c. No electrical switches should be energized during the fueling operation itself.

d. Do not perform fueling operations while an electrical storm is in the immediate area.

e. Personnel should discharge static electrical charges on their person by contacting one of the grounding connections before conducting any fueling operations.

f. Use only explosion-proof flashlights or extension lights for inspecting hazardous areas.

6. Fuel Spills.

a. Clean up fuel spills immediately.

b. Do not permit fuel spills to dry on the skin or clothing. Fuel splashed clothing should be removed immediately and affected skin areas should be washed with soap and water.

c. Do not use automatic hold-open gravity nozzles for helicopter refueling.

7. Bypassing of Fuel Filters. No JP-5 fuel filter may be bypassed during helicopter refueling operations without the concurrence of the CO, Engineering Officer, and PIC.

CHAPTER 9. HELICOPTER REFUELING PROCEDURES.

A. INTRODUCTION. This chapter establishes refueling procedures for helicopters aboard Coast Guard cutters. Care shall be exercised during fueling operations because of the potential for fire, injury to personnel, and introduction of contamination into the helicopter's fuel system.

CAUTION

SOME U.S. ARMY HELICOPTERS HAVE 15 PSIG (MAX) INTERNAL FUEL SYSTEMS. U.S. ARMY AND U.S. AIR FORCE CLOSED-CIRCUIT REFUELING (CCR) NOZZLES HAVE 15 PSI PRESSURE REGULATORS AND DO NOT HAVE ALL THE SAFETY FEATURES OF THE USN/USCG CCR NOZZLES. IN ADDITION, USN/USCG CCR NOZZLES HAVE 45 PSI PRESSURE REGULATORS. USE OF THE USN/USCG CCR NOZZLE ON A 15-PSI AIRCRAFT SYSTEM MAY DAMAGE THE AIRCRAFT'S FUEL SYSTEM. USE OF THE ARMY OR AIR FORCE CCR NOZZLE IS PROHIBITED UNLESS OPERATIONAL NECESSITY REQUIRES ITS USE AND A WAIVER IS GRANTED BY COMMANDANT (CG-711) DUE TO THE NATURE OF THE OPERATION. GRAVITY STATIC REFUELING OF THESE AIRCRAFT IS ACCEPTABLE.

B. IN THIS CHAPTER. This chapter discusses the following topics:

1. Refueling Methods.
2. Refueling Procedures.
3. Contaminated Fuel.
4. Defueling Procedures.

C. REFUELING METHODS.

1. Overview. The three standard methods of refueling aircraft are static refueling, hot refueling, and HIFR.

2. Static Refueling. Static refueling is conducted on deck with the helicopter's engines and rotor secured. There are two methods used for static refueling:

CAUTION

TO AVOID OVER-PRESSURIZATION OF THE H-60 FUEL SYSTEM, STATIC REFUELING SHOULD TAKE PLACE WITH 400HZ/115V AC POWER APPLIED.

a. Pressure Refueling. Pressure refueling adds fuel to the helicopter through a closed connection between the pressure refueling nozzle and the helicopter's fuel tank(s). It is the preferred method of refueling helicopters, and shall be considered the primary method of refueling on Coast Guard cutters.

CAUTION

USE CAUTION WHEN REFUELING NON-COAST GUARD OR ANY UNFAMILIAR AIRCRAFT. ALWAYS CONFIRM PROCEDURES AND SERVICING STANDARDS WITH THE AIRCRAFT CREW BEFORE COMMENCING FUELING OPERATIONS. FUELING PRESSURES AND PROCEDURES COULD DIFFER SUBSTANTIALLY.

b. Gravity Refueling. Gravity refueling adds fuel to the helicopter through an open filler neck, using the gravity nozzle. It increases the exposure of fueling personnel to benzene fumes, provides greater potential for a fuel spill, and exposes the helicopter's fuel system to sources of outside contamination. Gravity refueling is an alternate rather than the primary method of static refueling.

3. Hot Refueling. Hot refueling is the process of refueling a helicopter on deck with its engine(s) and/or APU running and/or rotor(s) turning. Helicopters equipped for pressure refueling may be hot refueled for training and operational missions.

WARNING

BECAUSE OF THE IMMEDIATE PRESENCE OF AN IGNITION SOURCE (RUNNING ENGINE), GRAVITY HOT REFUELING IS PROHIBITED.

CAUTION

REPETITIVE HOT REFUELING IN THE H-65 SHALL BE CAREFULLY CONSIDERED. BY LENGTHENING THE INTERVAL BETWEEN THROUGH/POST FLIGHT INSPECTIONS, THE RISK OF EXPERIENCING AN UNDETECTED AIRCRAFT COMPONENT PROBLEM INCREASES. THIS INTERVAL SHOULD NOT ROUTINELY EXCEED 6 HOURS.

4. Helicopter In Flight Refueling (HIFR). HIFR is the process of refueling a hovering helicopter, and is used to refuel helicopters too large to be accommodated on the flight deck, or when flight deck motion is out of limits. Fuel is added to the hovering helicopter through a closed connection between the HIFR rig and the helicopter's fuel tank(s). The H-65, H-60, and most U.S. Navy helicopters use the standard HIFR rig.

NOTE

At any time a cutter may be called upon to provide HIFR services to an aircraft in need of fuel, regardless of the ability of the aircraft to land on the ship. It is essential that HIFR procedures and equipment are well exercised. The practice of "dry HIFR" does not validate the ability to conduct actual HIFR operations and is an ineffective training evolution. All HIFR training evolutions shall result in positive fuel flow to the aircraft.

D. REFUELING PROCEDURES.

1. Refueling Preparation. In anticipation of refueling operations, the following preparations shall be made.

   a. Ensure that the service tank contains sufficient fuel for refueling the helicopter. If not, transfer fuel from a storage tank to the service tank.

   b. Strip the service tank and service filter and/or separator of all water.

   c. Break out and inspect the fuel hose and nozzle. Do not drag the hose over rough surfaces.

   d. Connect the hose and nozzle to the flushing tree. Flush the nozzle for 2 minutes or a minimum of 50 gallons at the full rated flow of the service pump to remove any residual contamination. Check the nozzle and hose for leaks.

   e. Draw fuel samples and conduct a clear and bright test IAW Chapter 8.

      (1) If the sample tests are satisfactory, conduct the MK I and MK III detector kit tests (before the day's first refueling evolution).

      (2) If the fuel tests are unsatisfactory, flush the hose and nozzle again and repeat the tests, making sure that the sampling container is clean.

      (3) If the fuel test remains unsatisfactory, troubleshoot the system to determine the cause of the contamination.

   f. Retain the clear and bright sample for inspection by the Engineering Officer and the PIC until completion of the next fueling evolution.

   g. Secure the JP-5 service pump, remove the fuel nozzle from the flushing tree, and lay out or stow the hose as appropriate.

   h. If the nozzle is disconnected, it shall be flushed again and a clear and bright conducted before refueling the aircraft.

WARNING

ANY FUEL LEAKS SHALL BE REPAIRED BEFORE REFUELING OPERATIONS.

WARNING

FUEL SHALL NOT BE TRANSFERRED TO THE HELICOPTER UNTIL THE SAMPLES TAKEN FROM THE FUEL NOZZLE FOR TESTING ARE WITHIN REQUIRED LIMITS.

WARNING

EYE PROTECTION SHALL BE WORN BY ALL PERSONNEL IN THE AREA NEAR THE FUEL NOZZLE OR ANYTIME THE FUEL HOSE IS PRESSURIZED.

NOTE

The service tank should be topped off daily at the completion of the last refueling operation, so the fuel in the service tank may be recirculated sufficiently before the next refueling operation.

2. Static Refueling Procedures. Before refueling the aircraft, ensure that tiedowns are installed and that the engine(s) and rotor(s) are secured. Tiedowns are not required for static refueling if the vessel is moored pier side or hove to in the ice.

   a. Set the helicopter refueling detail IAW Chapter 2.

   b. Pipe: "THE SMOKING LAMP IS EXTINGUISHED ON ALL WEATHER DECKS."

   c. Secure emissions from:

      (1) All antennas within 25 feet of the aircraft

      (2) Those antennas within 50 feet of the aircraft that transmit with 500 watts or more of power

      (3) All shipboard radar(s) capable of main beam illumination of the helicopter

   d. Present the clear and bright fuel sample to the Engineering Officer and the PIC (or their representatives) for approval.

   e. Ground the aircraft to the cutter using the Shipboard Aviation Allowance Equipage List (AEL) grounding cable. (Inspect the grounding cable for condition including the strength of the springs on the alligator clips.)

WARNING

A POSITIVE GROUND WILL NOT BE ACHIEVED IF THE POINT WHERE THE BONDING WIRE IS ATTACHED TO THE CUTTER IS DIRTY, CORRODED, OR PAINTED.

   f. When all parties are satisfied with the condition of the fuel, refuel the aircraft using the following procedures:

      (1) Remove the fuel tank fill neck cap and pressure refueling connector cap.

      (2) When using the gravity refueling nozzle, attach the nozzle static bonding wire to the helicopter.

      (3) Attach or insert the nozzle. If using the D1R nozzle, open the poppet valve.

      (4) Energize the JP-5 service pump.

      (5) If using the D1R nozzle, the flight mechanic shall test the high level fuel shutoff for proper operation. If the high level fuel shutoff operates correctly, fuel to the quantity requested by the pilot. If the high level fuel shutoff does not operate correctly, fueling shall be IAW the appropriate flight Manual.

(6) If using the gravity refueling nozzle, open the nozzle and fuel to the quantity requested by the pilot.

(7) Close the nozzle and de-energize the JP-5 service pump.

(8) Disconnect or remove the nozzle.

(9) When using the gravity refueling nozzle, disconnect the nozzle static bonding wire.

(10) Replace the fuel cap(s).

(11) Energize the JP-5 service pump and take a clear and bright sample. Present the sample to the Engineering Officer and the PIC (or his/her representatives) for inspection. Retain the sample until completion of the next fueling evolution.

(12) De-energize the JP-5 service pump and stow the fuel hose as appropriate.

g. Secure the refueling detail.

3. Hot Refueling or APU Assisted Refueling Procedures. The hot refueling or APU assisted refueling procedures are listed in below:

a. Set FLICON ONE (Chapter 6).

b. Set the helicopter hot refueling detail (Chapter 2).

c. Secure emissions from:

(1) All antennas within 25 feet of the helicopter

(2) Antennas within 50 feet of the helicopter that transmit equal or greater than 500 watts

(3) Shipboard radar(s) capable of main beam illumination of the helicopter

d. Present the clear and bright fuel sample to the Engineering Officer (or his/her representative) for approval.

e. Lay out and secure the fuel hose (with the pressure refueling nozzle attached) along the gunwale of the flight deck on the side that is closest to the helo pressure refueling receptacle.

f. Recover the aircraft with TALON or install primary tiedowns.

g. Pilot completes the required pre-fueling checklist items IAW each aircraft's flight Manual.

h. Disembark all passengers and clear them from the flight deck.

i. Before hot refueling, HCO passes the MK I, MK III, and FSII results to the aircrew.

j. Electrical and electronic components aboard the helicopter shall be secured IAW the applicable helicopter flight Manual. No transmissions on HF shall be made. All other radio transmissions shall be kept to a minimum.

NOTE

Where possible, the helicopter electrical and electronic equipment should be secured before helicopter recovery. Comply with the requirements of the appropriate helicopter flight handbook. In all cases, the helicopter radar shall be secured or set to standby before landing due to the radiation hazard to personnel.

k. Present the clear and bright sample to the aircrew, if requested.

l. For APU assisted refueling, aircrew will request an APU start.

m. Start APU. Flight mechanic acts as APU fire guard.

n. Aircrew signals the LSO when ready to refuel.

o. LSO posts the fire guard in a full proximity suit with a PKP fire extinguisher at the helicopter fueling point and then waves in the fueling team.

(1) One member of the refueling team grounds the helicopter to the cutter using the AEL approved grounding cable. (Inspect the grounding cable for condition and the strength of the springs on the alligator clips.)

(2) Fueling petty officer, under the supervision of the helicopter crew member, removes the pressure refueling connector cap, attaches the nozzle, and opens the poppet valve.

WARNING

A POSITIVE GROUND WILL NOT BE ACHIEVED IF THE POINT WHERE THE BONDING WIRE IS ATTACHED TO THE CUTTER IS DIRTY, CORRODED, OR PAINTED.

WARNING

THE POPPET VALVE SHALL BE FULLY OPEN (180 DEGREES OF TRAVEL) TO PREVENT THE POSSIBILITY OF A FUEL SPILL.

p. Aircrew signals the LSO to energize the JP-5 service pump.

q. LSO orders the JP-5 pump room to “ENERGIZE PUMP” and, when confirmed, signals the aircrew.

r. Fueling petty officer and helicopter crewmember immediately check the nozzle and fuel hose for leaks.

WARNING

IN THE EVENT OF A LEAK OR FUEL SPILL, SECURE THE JP-5 SERVICE PUMP AND SECURE AND EVACUATE THE HELICOPTER IMMEDIATELY. HELICOPTER LAUNCH IS PROHIBITED.

s. Helicopter crewmember tests the high level fuel shutoff for proper operation.

WARNING

THE HIGH LEVEL FUEL SHUTOFF SHALL BE OPERATING PROPERLY TO CONTINUE WITH HOT REFUELING. IF THE SHUTOFF IS NOT OPERATING OR IF EXCESSIVE FUEL PRESSURE (MAXIMUM OF 55 PSI) PREVENTS IT FROM OPERATING PROPERLY, THE HELICOPTER FUEL SYSTEM CAN BE OVERFILLED, CAUSING FUEL TO SPILL FROM THE VENTS, INCREASING THE RISK OF FIRE.

t. The JP-5 pump room reports the quantity of fuel pumped in 10-gallon increments. (On WMEC 270s, the refueling station reports the quantity of fuel pumped.)

u. Approximately 50 lb before the desired fuel load, the helicopter crewmember signals the LSO to secure the JP-5 service pump.

v. LSO orders the JP-5 pump room to “SECURE PUMP” and when confirmed, signals the aircrew.

w. Fueling petty officer closes the poppet valve, disconnects the nozzle, and replaces the fuel cap.

x. LSO waves out the refueling team and fire guard. The refueling team disconnects the grounding wire and secures the fuel hose to the appropriate deck edge.

y. Embark passengers.

z. Re-energize the helicopter’s electrical and electronic equipment IAW the helicopter’s flight Manual.

aa. Launch the helicopter or secure the APU as applicable.

WARNING

NO HF RADIO TRANSMISSIONS SHALL BE MADE BEFORE TAKEOFF AND THE RADAR SHALL REMAIN SECURED OR IN STANDBY UNTIL CLEAR OF THE CUTTER DUE TO RADIATION HAZARDS.

ab. Re-energize the JP-5 service pump and take a clear and bright sample.

(1) Present the sample to the Engineering Officer, aircrew, or his/her representative for inspection.

(2) If the helicopter is launched, report the sample result findings to the aircrew.

WARNING

IF UNABLE TO OBTAIN A SATISFACTORY CLEAR AND BRIGHT WITHIN 5 MINUTES OF AIRCRAFT CLEARING THE CUTTER, THE AIRCRAFT SHALL BE LANDED AS SOON AS POSSIBLE AT THE NEAREST SUITABLE LANDING SITE. THIS COULD INCLUDE THE CUTTER.

NOTE

Clear and Bright results SHALL be passed to the PIC within 5 minutes from the time the aircraft is launched or shut down.

ac. Retain the sample until completion of the next flight operation.

ad. De-energize the JP-5 service pump, and stow the fuel hose.

ae. Secure the hot refueling detail and FLICON ONE (if appropriate).

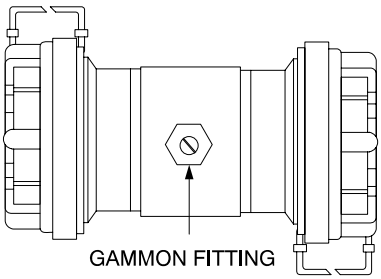

cg9100117a

Figure 9-1. HIFR Rig Sample Assembly

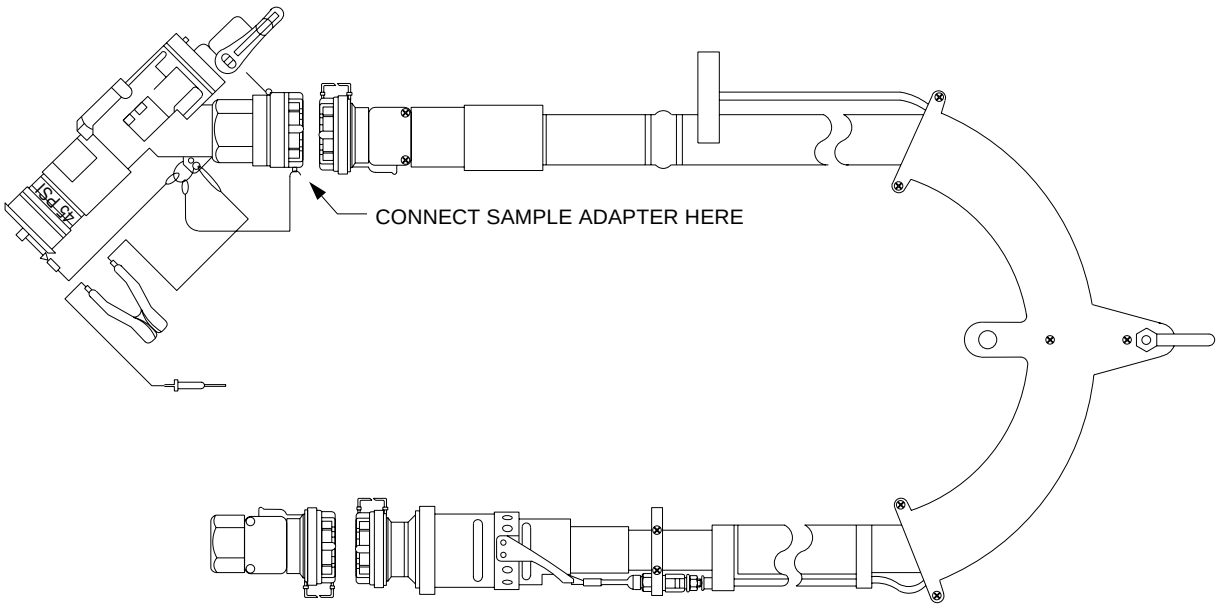

cg9100062a

Figure 9-2. Sample Adapter Location

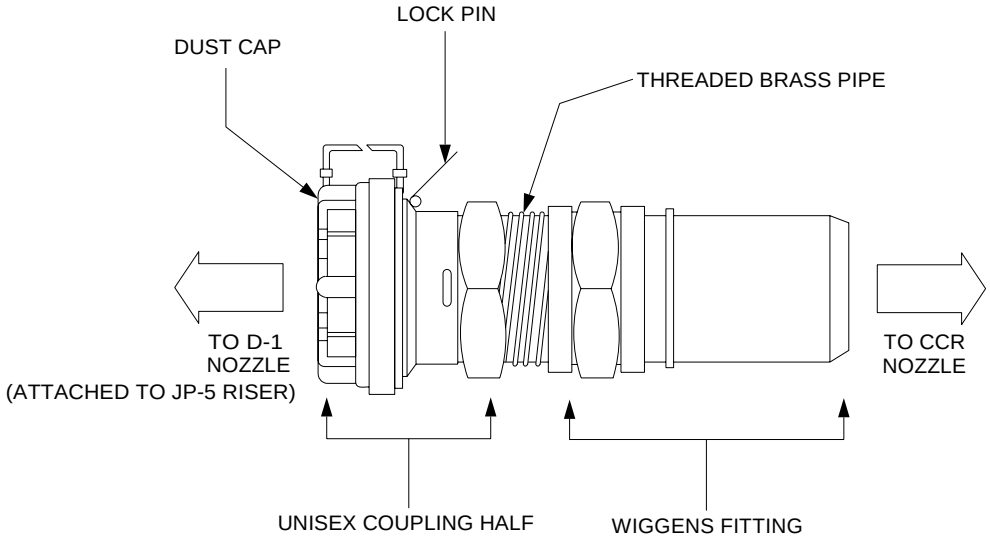

cg9100118a

Figure 9-3. HIFR Rig to D1 Nozzle Adapter

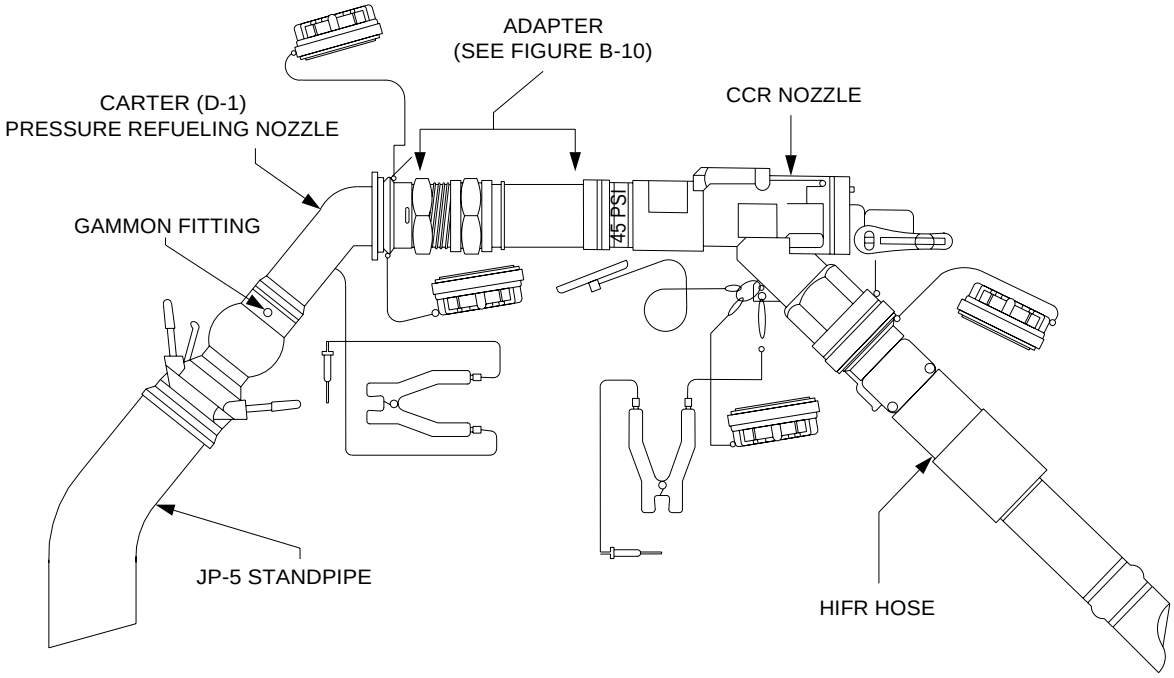

cg9100063a

Figure 9-4. HIFR Rig to D1 Nozzle Configuration

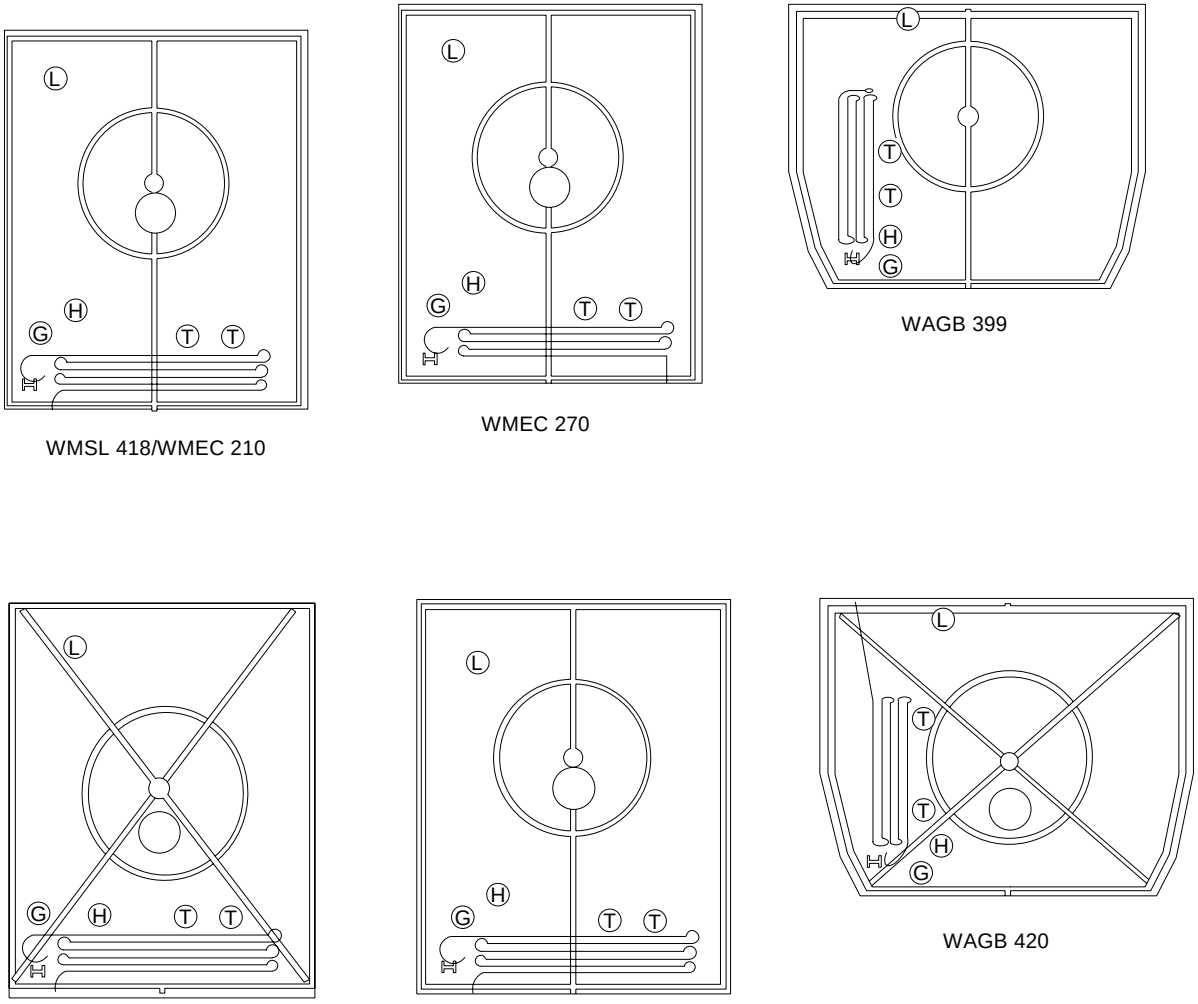

L = LSO
G = GROUND WAND HANDLE
H = HOOKUP PERSON
T = HOSE TENDER

cg9100064a

Figure 9-5. HIFR Hose Layout

4. HIFR Procedures. Use the HIFR checklist in , as a guide. The following are the HIFR procedures:

NOTE

Coast Guard H-65 helicopters are authorized to conduct HIFR with all HIFR-Certified Coast Guard Cutters and with those HIFR-Certified U.S. Navy ships whose JP-5 systems incorporate an installed Go-No-Go fuel monitor.

NOTE

Coast Guard H-60 helicopters have a Go-No-Go monitor incorporated into the HIFR receptacle and are authorized to conduct HIFR with all HIFR certified ships.

NOTE

Navy HIFR procedures are established in NAVAIR 00-80T-122.

NOTE

Dry HIFR does not adequately reflect a full HIFR evolution and should not be conducted.

a. Set FLICON FOUR.

(1) Upon pilot request, illuminate the HIFR heading lights.

(2) Immediately prior to HIFR operations, connect the hose and HIFR nozzle to the flushing tree. Flush 100 gallons of fuel from the service tank through the HIFR nozzle as measured by the totalizer at the full rated flow of the service pump. Check the nozzle and hose for leaks.

(3) After flushing, draw a clear and bright sample from the HIFR nozzle at the gammon fitting and report results to the aircraft.

WARNING

IT IS CRITICAL THAT FUEL BE FLUSHED THROUGH THE ENTIRE HIFR SYSTEM BACK TO THE FUEL TREE AND THE CLEAR AND BRIGHT SAMPLE BE TAKEN FROM THE GAMMON FITTING ON THE HIFR NOZZLE.

(4) Lay out the fuel hose as depicted in Figure 9-5. Position the bitter end of the hose, with the HIFR rig attached, in the vicinity of the HIFR “H.”

(5) Break out the approved AEL grounding wand, insulated gloves, and LSO signal flags/paddles/wands.

(6) Rig a guard line across the gap between the aft safety nets or catwalks on the port side of the flight deck.

(7) Attach NVG Compatible blue or green Chemlights to the first 50 feet of the fuel hose at approximately 10-foot intervals, starting at the hoisting saddle on the HIFR rig (night only).

(8) LSO inspects the connection between the HIFR rig and the fuel hose for proper security, ensuring that the fuel hose is not pressurized, by verifying that the red pressure indicator is not extended. In addition check for a visible green line showing on the quick-disconnect coupling. This will ensure proper seating of the connection. Also check to ensure that all valves are open and the fuel control bail is closed (Figure 9-3).

(9) OOD provides a relative wind of approximately 330-345 degrees at 15 knots (or as requested by the PIC).

CAUTION

RELATIVE WIND SHOULD BE PLACED TO REDUCE THE PRESENCE OF SUPERSTRUCTURE GENERATED TURBULENCE IN THE HIFR AREA.

(10) LSO reports readiness to the HCO.

(a) LSO sends out the hookup team and hose handlers.

(11) Secure emissions from:

(a) All antennas within 25 feet of the helicopter.

(b) Antennas within 50 feet of the helicopter that transmit with 500 watts or more of power.

(c) Shipboard radar(s) capable of main beam illumination of the helicopter.

WARNING

NO HF RADIO TRANSMISSIONS SHALL BE MADE DURING HIFR OPERATIONS. ALL OTHER RADIO TRANSMISSIONS SHALL BE KEPT TO A MINIMUM.

(12) Present the clear and bright fuel sample to the Engineering Officer (or his/her representative) for approval.

(13) Pilot determines the amount of fuel to be transferred to the helicopter based on mission requirements and performance calculations, and passes the amount to the cutter by radio.

(14) HCO passes the fuel test results to the helicopter, consisting of sediments (in mg/l), free water (in PPM), and FSII (in percent).

(15) Pilot (if desired) requests to see the clear and bright sample. (Helicopter must provide a bag to pick up the sample.)

(16) Pilot completes the checklist items IAW the flight manual and, when ready, reports to the cutter: “REQUEST PERMISSION TO HIFR.”

(17) HCO reports: “YOU ARE CLEARED TO HIFR. TAKE SIGNALS FROM THE LSO,” and announces “GREEN DECK.”

(18) LSO begins giving advisory signals to the helicopter.

(19) Pilot, using commands from the helicopter crewmember and advisory signals from the LSO, maneuvers into hoisting position over the HIFR “H” on the flight deck.

(20) The hookup team and hose handlers connect the HIFR rig to the hoist hook using the following procedures:

WARNING

STATIC DISCHARGE FROM A HELICOPTER CAN EXCEED 200,000 VOLTS. INJURY OR DEATH CAN OCCUR IF THE HOIST HOOK IS NOT PROPERLY GROUNDED BEFORE BEING HANDLED BY PERSONNEL. ONCE GROUNDED, THE HOOK SHALL REMAIN GROUNDED, OR STATIC CHARGES MAY IMMEDIATELY REBUILD.

(a) When the hoist hook is within reach, ground the hoist hook to the cutter using the grounding wand.

(b) Attach the hoist hook to the eye in the HIFR rig saddle.

(c) Once hookup is complete, clear the grounding wand person and equipment from the vicinity.

(d) The hookup person maintains the forward hose handler position.

(e) Lift the HIFR rig off the deck so that it does not drag on the deck when hoisted.

(f) Give a THUMBS UP to the helicopter crew member indicating that the HIFR rig is ready to be hoisted.

(g) Tend the fuel hose so it does not drag across the flight deck as it is hoisted. Do not allow it to sag below the level of the flight deck.

WARNING

THE HOOKUP TEAM AND HOSE HANDLERS SHALL REMAIN OUT OF THE BIGHT OF THE HOSE. ALL PERSONNEL TENDING THE HOSE SHALL STAND FORWARD OF THE HOSE, KEEPING THE HOSE BETWEEN THEM AND THE EDGE OF THE FLIGHT DECK AT ALL TIMES. PERSONNEL STANDING IN THE BIGHT OF THE HOSE CAN BE SWEPT OFF THE FLIGHT DECK IF THE FUEL HOSE SHOULD SUDDENLY BECOME TAUT.

WARNING

ALLOWING THE HOSE TO DRAG IN THE WATER CAN CAUSE THE HOSE TO PART, CAUSING DAMAGE TO THE HELICOPTER AND/OR INJURY TO PERSONNEL.

(21) When the HIFR rig is clear of the deck, the pilot maneuvers the helicopter to a position abeam the HIFR “H,” clear of the side of the cutter, and maintains position using visual references (the HIFR heading lights at night).

(22) Helicopter crewmember connects the HIFR rig to the helicopter:

(a) Raise the hoist hook until it is two-blocked.

(b) Connect the HIFR rig ground wire to the helicopter and connect the HIFR rig to fueling connector, ensuring that it is securely attached.

(c) Open the fuel bail.

(d) Advise the pilot that the HIFR rig is connected and, at PIC’s direction, signal the cutter to commence pumping.

(e) Monitor the HIFR rig and hose for fuel leaks.

(23) Upon signal from the helicopter crewmember, the LSO orders the JP-5 pump room to “ENERGIZE PUMP.”

(a) The LSO uses signal flags or paddles (wands at night) to indicate to the helicopter the status of the JP-5 service pump.

(b) During daytime fueling operations, RED OVER GREEN signifies that the pump is not energized, and GREEN OVER RED signifies that the pump is energized.

(c) During nightime OPS, the LSO shall use the GREEN wand to indicate the JP-5 service pump status. Energizing the GREEN wand indicates “THE PUMP IS ON,” and extinguishing the GREEN wand indicates “THE PUMP IS OFF.”

NOTE

While the HIFR rig is positioned in or immediately outside the cabin, the LSO shall display the appropriate service pump signal (AM PUMPING FUEL/HAVE CEASED PUMPING FUEL) unless helicopter repositioning or breakaway signals are required.

(d) The JP-5 pump room energizes the JP-5 service pump, ensures that sufficient pressure and flow rate are being provided, and reports the quantity of fuel pumped in 10-gallon increments. (On WMEC 270s, the refueling station reports the quantity of fuel pumped.)

(24) HCO passes the quantity pumped to the helicopter over the radio in 10-gallon increments.

(25) The pilot should not respond to fuel quantity transmissions unless specifically requested to acknowledge.

(26) Pilot monitors the fuel quantity gauges and aircraft power requirements, and secures the transfer of fuel at 50 lb before the desired quantity, or 10 percent before power limitations, whichever comes first.

(a) Pilot directs the helicopter crewmember to stop refueling.

(b) Helicopter crewmember signals the cutter to stop refueling.

(c) LSO orders the JP-5 pump room to “SECURE PUMP,” and signals the helicopter when the pump is secured.

(27) Helicopter crewmember, after the pump is secured, closes the bail and disconnects the HIFR rig from the refueling receptacle, disconnects the grounding wire, secures the access to the refueling receptacle, and reports when ready to commence the hoist to the pilot.

(28) Pilot, using commands from the helicopter crew member and advisories from the LSO, maneuvers the helicopter over the HIFR “H,” and holds position while the crewmember lowers the HIFR rig to the deck.

(29) Hose handlers recover the hose as the helicopter moves in, and the hookup team disconnects the hoist hook from the HIFR rig, holding onto the hook until it is retrieved by the helicopter. Do not allow the hoist hook to snag onto any portion of the ship or the HIFR rig to fall onto the deck.

NOTE

It is not necessary to ground the HIFR rig or hoist hook during recovery, as they are grounded through the fuel hose.

(30) After the hoist hook has been disconnected, and when cleared by the helicopter crew member, the pilot maneuvers the helicopter clear of the cutter.

(31) HCO changes the deck status light to RED.

(32) After the helicopter has departed:

(a) LSO orders the JP-5 pump room to re-energize the JP-5 service pump at the request of the JP-5 Fuel King.

(b) LSO ensures that a clear and bright sample is taken and presented to the Engineering Officer (or his/her representative) for inspection.

(c) HCO reports the findings of the clear and bright test to the helicopter within 5 minutes.

WARNING

IF UNABLE TO OBTAIN A SATISFACTORY CLEAR AND BRIGHT WITHIN 5 MINUTES OF AIRCRAFT CLEARING THE CUTTER, THE AIRCRAFT SHALL BE LANDED SOON AS POSSIBLE AT NEAREST SUITABLE LANDING SITE. THIS MAY INCLUDE THE CUTTER.

(d) The sample is retained until completion of the next fueling evolution for that aircraft tail number (refer to Chapter 8).

5. Emergency Breakaway.

a. Equipment. Emergency breakaway capability is built into the HIFR rig. When activated, the dry disconnect coupling between the HIFR rig and the fuel hose is broken, and the hose falls away from the helicopter, while the HIFR rig remains attached. An emergency breakaway is accomplished by the helicopter crewmember, by pulling on the emergency breakaway handle, upon command from either the pilot, HCO, or LSO.

WARNING

IF THE HOIST SHEAR SWITCH IS ACTIVATED DURING HIFR, THE HIFR RIG WILL DISCONNECT FROM THE HOIST, BUT WILL REMAIN CONNECTED TO THE HIFR FUELING RECEPTACLE. DAMAGE TO THE HELICOPTER AND/OR INJURY TO PERSONNEL MAY OCCUR.

WARNING

THE USN VERSION OF THE NHC HIFR RIG DOES NOT FEATURE A MANUAL BREAKAWAY CAPABILITY. TO COMPLETE AN EMERGENCY BREAKAWAY, APPROXIMATELY 450 LB OF TENSION WILL HAVE TO BE APPLIED TO THE RIG THROUGH AIRCRAFT MANEUVERING. THE USCG VERSION INCORPORATES A MANUAL BREAKAWAY CABLE IN ADDITION TO THE AUTOMATIC BREAKAWAY FEATURE OF THE USN RIG. WITH THE EXCEPTION OF THE MANUAL BREAKAWAY CABLE, THE RIGS ARE VISUALLY IDENTICAL.

b. Procedures. The following are the HIFR emergency breakaway procedures:

(1) An emergency breakaway is initiated by the pilot, HCO, or LSO.

(a) HCO initiates a breakaway by calling, “BREAKAWAY, BREAKAWAY, BREAKAWAY” on the radio and simultaneously activating the wave-off lights.

(b) LSO initiates a breakaway by using the EMERGENCY BREAKAWAY signal.

(c) Pilot initiates a breakaway by ordering the helicopter crewmember to “BREAKAWAY, BREAKAWAY, BREAKAWAY.”

(2) The helicopter crewmember executes the breakaway and replies, “BREAKAWAY, BREAKAWAY, BREAKAWAY.”

(3) JP-5 emergency shutoff switch is activated.

(4) Hose handlers recover the fuel hose.

(5) LSO clears the flight deck for an emergency landing and reports “FLIGHT DECK CLEAR” to the HCO.

(6) Pilot and HCO initiate action appropriate for the emergency.

WARNING

COMPLIANCE WITH THE BREAKAWAY COMMAND IS MANDATORY.

CAUTION

FOLLOWING AN EMERGENCY BREAKAWAY, THE FUEL HOSE AND QUICK DISCONNECT COUPLING SHALL BE WASHED DOWN WITH FRESH WATER, AND THE HOSE AND HIFR RIG FLUSHED WITH FUEL PRIOR TO BEING USED AGAIN.

E. CONTAMINATED FUEL.

1. If fuel in the helicopter is suspected of being contaminated, a sample shall be taken from the helicopter’s fuel tank drains and tested to verify the quality before conducting any flight operations.

2. If the helicopter is airborne, the suspicion of contamination shall be reported to the pilot immediately by radio. The helicopter’s mission shall be aborted, and the helicopter recovered at the closest safe landing area.

3. Contamination shall be suspected anytime a component in the JP-5 system fails, or if a sudden increase in pressure or decrease in flow occurs across the GO-NO-GO monitor during fueling.

F. DEFUELING PROCEDURES.

1. Overview. The two primary requirements for defueling helicopters on cutters are to reduce the fuel load (weight) for a specific mission and to perform maintenance on the helicopter fuel system.

2. Pressure Defueling. The JP-5 systems onboard Coast Guard cutters do not have a defueling capability. A separate pump is needed to drain fuel from the helicopter and transfer it to the cutter. An air-operated, 25 gallons per minute (GPM) (or greater) portable pump is specified in the AEL.

3. Pressure Defueling Procedure. Before defueling the helicopter, ensure that tiedowns are installed and that the engine(s) and rotor(s) are secured. Tiedowns are not required for defueling if the vessel is moored pier side or hove to in the ice.

a. Set the helicopter refueling detail IAW Chapter 2. The JP-5 pump room position need not be manned.

b. Pipe: "THE SMOKING LAMP IS OUT ON ALL WEATHER DECKS."

c. Secure emissions from:

(1) All antennas within 25 feet of the helicopter.

(2) Those antennas within 50 feet of the helicopter that transmit with 500 watts or more of power.

(3) All shipboard radar(s) capable of main beam illumination of the helicopter.

d. Ground the helicopter to the cutter using the Shipboard Aviation AEL grounding cable. (Inspect the grounding cable for condition and the strength of the springs on the alligator clips.)

WARNING

A POSITIVE GROUND MAY NOT BE ACHIEVED IF THE POINT WHERE THE BONDING WIRE IS ATTACHED TO THE CUTTER IS DIRTY, CORRODED, OR PAINTED.

e. A minimum of 10 feet of internally grounded fuel hose (a standard 50-foot hose may be used) is connected to the suction side of the pump. The other end of the hose is connected to the helicopter using the pressure refueling nozzle (with the strainer removed).

f. A second internally grounded fuel hose is then attached between the discharge side of the pump and the appropriate fill connector on the cutter.

g. Attach the pressure refueling nozzle to the helicopter pressure fill connection and open the poppet valve.

h. Connect low-pressure air to the defueling pump and begin pumping.

i. When the helicopter is defueled, secure the pump, disconnect the air supply, and then close the nozzle poppet valve.

j. Disconnect the nozzle from the helicopter and replace all fuel cap(s).

k. Secure the helicopter refueling detail.

l. A small amount of fuel will remain in the helicopter (exact quantity varies by helicopter type) following pressure defueling.

4. H-65 Gravity Defueling.

a. The H-65 may be gravity defueled. However the procedure is very slow, and therefore, only suited for removing small quantities of fuel (such as after pressure defueling). It enables complete removal of all fuel.

b. A special adapter is required, and should be part of the AVDET HSK. The adapter is attached to the drain sumps on the helicopter fuel cells. The adapter drains the fuel to an open container or a fuel hose connected directly to an appropriate tank.

c. Gravity defueling is not recommended for removing large quantities of fuel.

5. Disposition of Fuel. During defueling operations, the fuel must be transferred to one of the cutter fuel storage systems. The system selected to receive the fuel will depend on specific circumstances. The following guidance shall be considered when making this decision:

a. Helicopters shall never be defueled directly into the JP-5 service tank.

b. All military helicopters are authorized to use JP-4 and JP-8. Until a helicopter has been refueled several times with JP-5, the fuel in its tanks may have low flash point.

c. Low flash point fuel shall not be defueled into the cutter JP-5 system unless the flash point of the fuel has been tested and proven to be 140 °F or greater.

d. If it is determined that the helicopter has only JP-5 onboard, and the fuel is not suspected of being contaminated, it can be defueled into the cutter JP-5 storage tanks.

e. Helicopters with low or intermediate flash point fuel or contaminated fuel onboard shall be defueled into the cutter waste oil storage tank, or the diesel storage tanks (if approved by the CO).

CHAPTER 10. VERTICAL REPLENISHMENT (VERTREP).

A. INTRODUCTION.

1. The transfer of cargo or personnel by cargo sling or hoist is sometimes more practical than landing a helicopter on deck. Considerations are:

   a. Size, shape, and weight of the cargo.

   b. Number and condition of personnel to be transferred.

   c. Flight deck stability.

   d. Mission urgency.

2. Personnel to be transferred to or from a cutter shall be thoroughly briefed on procedures and safety precautions.

B. IN THIS CHAPTER. This chapter discusses the following topics:

NOTE

The procedures in this chapter apply to VERTREP via cargo sling. FLICON FIVE in Chapter 6 lists the necessary preparations for hoist operations.

1. General VERTREP Information.

2. Mission Planning.

3. VERTREP Equipment.

4. Load Preparation.

5. VERTREP Procedures.

6. Night VERTREP.

C. VERTREP GENERAL INFORMATION.

1. Helicopters. Table 3-1 lists the different models of helicopters for which each class of Coast Guard cutter is certified to conduct VERTREP operations. VERTREP certification is not required for hoist operations.

2. Hazardous Materials.

   a. Transportation. Transportation of hazardous materials, both inside the aircraft and externally, shall be IAW Preparation of Hazardous Materials for Military Air Shipment, Air Force Regulation (AFR) 71-4. The preferred method for transport of such cargo is by external load.

   b. Waivers. Waivers to the provisions of AFR 71-4 and authorization to transport hazardous materials not listed in AFR 71-4 may be requested from Commandant (CG-711) via the chain of command.

NOTE

When operating in remote areas, and when the mission concerned would be adversely affected or health and welfare of personnel would be jeopardized by the delay caused in obtaining a waiver, COs of air capable cutters may authorize the transport of "single dagger" items (as annotated in Table 4-1 of AFR 71-4) aboard their deployed aircraft.

3. VERTREP Limitations. Avoid payloads weighing less than 150 lb due to their inherent instability in flight. Adding additional weight to "ballast" or "stabilize" the load is strongly encouraged to prevent excessive oscillations of the payload during flight.

D. VERTREP MISSION PLANNING.

1. Overview. The following are factors to consider when planning a VERTREP operation.

2. Helicopter Payload. Helicopter payload is the additional weight a helicopter can carry, based on its performance capability in a hover, and restricted by its maximum allowable gross weight. Performance capability is affected by air density (density altitude) and relative wind, and is greatly enhanced on cool, dry, windy days at lower elevations. Coast Guard helicopter payload information is contained in Appendix E.

3. VERTREP Relative Wind. For single rotor helicopters, a relative wind direction of 270 to 330 degrees shall be used when the pilot in the right seat is at the controls. A relative wind direction of 030 to 090 degrees shall be used when the pilot in the left seat is at the controls. Relative wind direction is not normally a critical factor for tandem rotor helicopters. However, regardless of the model of helicopter, a relative wind direction between 330 and 030 degrees should not be used because of turbulence created by the cutter's superstructure.

4. VERTREP Cargo Size, Shape, and Weight. The size, shape, and weight of the cargo determine how the cargo will be transported, and the number of trips required. Compact loads may be transported internally (subject to floor loading and center of gravity restrictions), while large, bulky loads must be externally transported. When transporting external loads, air speed may be greatly restricted due to the aerodynamic characteristics of the load.

5. Distance to Be Flown and Meteorological Conditions. The distance the cargo is to be transported and the weather conditions will determine the amount of fuel to be carried and the flight crew required. An increase in either will cause a decrease in the helicopter's payload.

E. VERTREP EQUIPMENT.

1. Overview. Certain cargo handling, load carrying, and auxiliary equipment is needed to conduct VERTREP. Most of the equipment described in this section is not required to be carried on cutters. However, this equipment may be encountered during VERTREP operations with other services. Refer to the

Shipboard Aviation Allowance Equipage List (AEL) for details of VERTREP equipment required on cutters.

CAUTION

COMPONENTS HAVING A DIFFERENT LOAD CAPACITY AND/OR DIFFERENT TYPES OF SLING ASSEMBLIES ARE NOT INTERCHANGEABLE. MIXING COMPONENTS WITH DIFFERENT LOAD CAPACITIES AND/OR SLING TYPES CAN RESULT IN UNPREDICTABLE LIFTING CHARACTERISTICS AND/OR FAILURE OF THE SLING ASSEMBLY.

2. Pallets. Four-way pallets are platforms 40 inches long by 48 inches wide and approximately 4 inches high. They are constructed of welded steel or hardwood (usually oak). Pallets are designed to be lifted by a forklift from any side. Cargo is strapped or banded onto pallets to provide a stable and secure load (Figure 10-1).

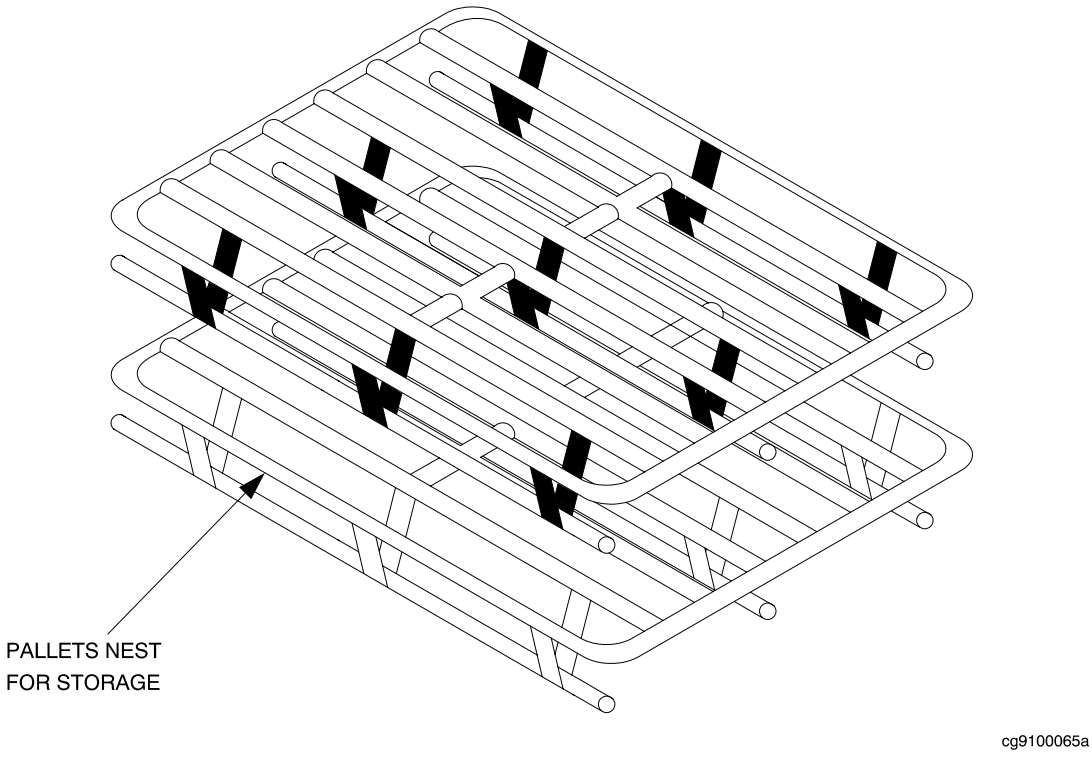

Figure 10-1. Nest-Type Tubular Steel Pallet

3. Cargotainers. Cargotainers are pallets with wire mesh sides that fold down for easy storage. They are ideal for transporting loose and odd-shaped items. Four attachment points are provided for a hoisting sling (Figure 10-2).

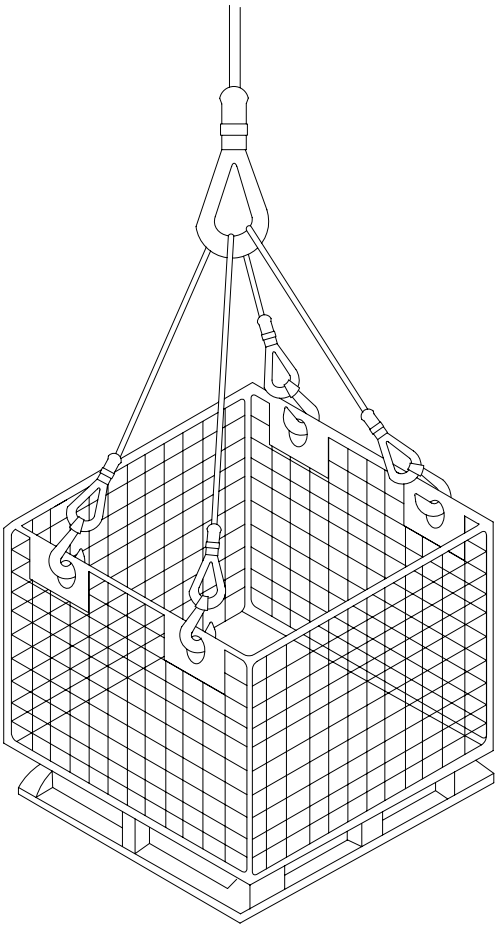

cg9100066a

Figure 10-2. Hoisting Sling Hooked to Cargotainer (Four Attachment Points)

4. Cargo Nets. The bulk of VERTREP cargo is transported in nylon cargo nets. Nets used for VERTREP are made of 1 1/2 inch nylon webbing, and come in two sizes: 12 feet by 12 feet and 14 feet by 14 feet. Oblong metal rings on each of the four corners are used to lift the net. Rough treatment, such as dragging the net across the flight deck, causes damage to the nylon webbing, and should be avoided (Figure 10-3).

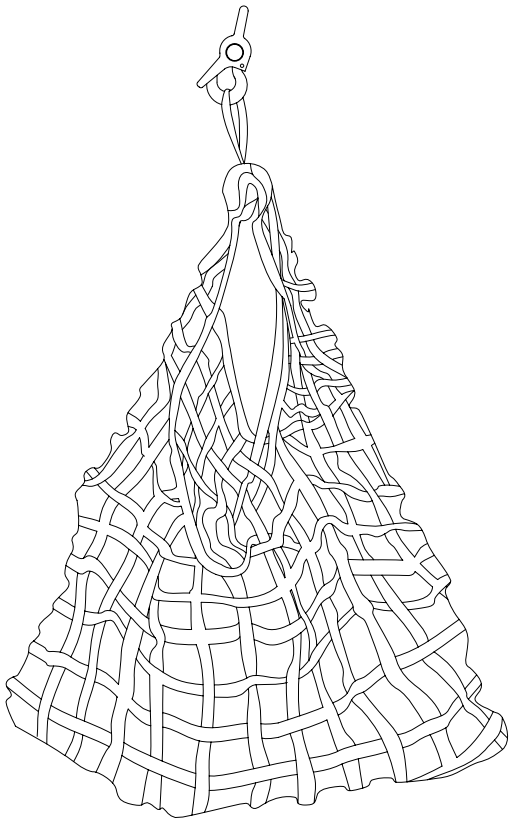

cg9100067a

Figure 10-3. Nylon Cargo Net, Mk 16 Mod 0 Cargo Pallet Net, and Becket

5. Adjustable Pallet Slings. The adjustable pallet sling is a two-loop wire rope sling used to lift loaded pallets without using a cargo net. Two thimbles provide attachment points for a hoisting sling. The sling comes in four sizes which are color coded (Figure 10-4):

   a. Mk 85 (red) for loads 13 to 31 inches high.

   b. Mk 86 (black) for loads 29 to 40 inches high.

   c. Mk 87 (green) for loads 36 to 50 inches high.

d. Mk 100 (yellow) for loads 48 to 70 inches high.

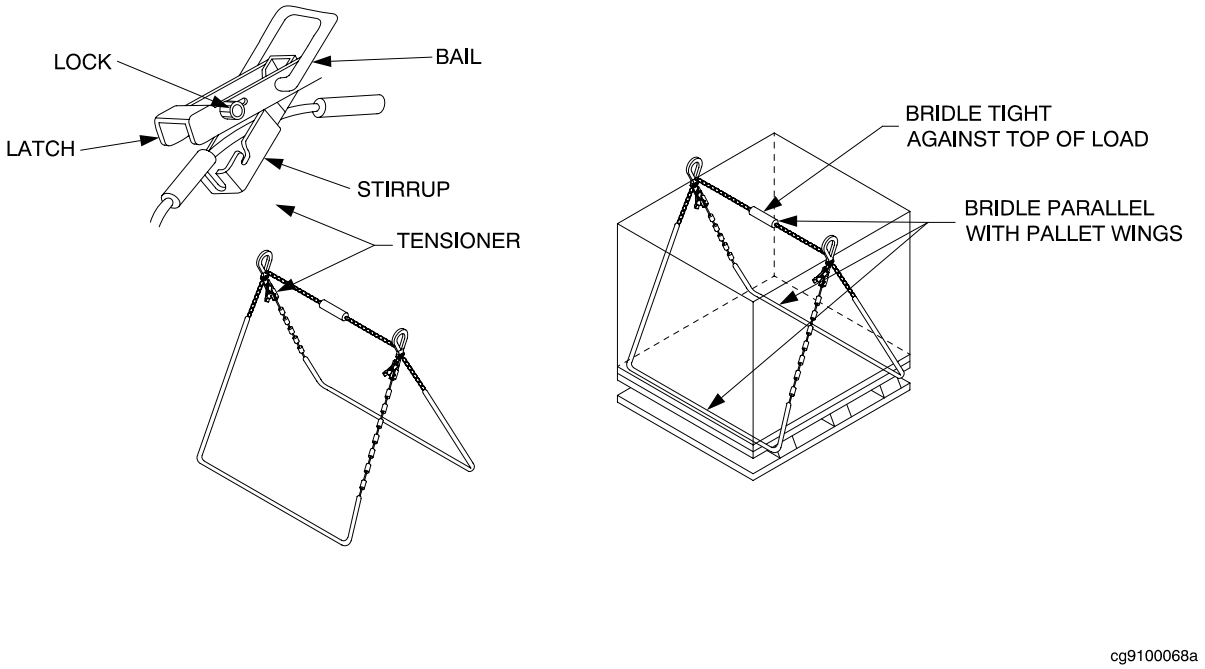

Figure 10-4. Adjustable Pallet Sling

6. Hoisting Slings.

a. A hoisting sling is used to attach the external load to the helicopter cargo hook. It consists of a pendant and up to six legs. The pendant has an eye at each end, and a stiffening tube that makes hooking up the load easier. The legs have an eye at one end and a cargo hook at the other. The eye end of the leg is attached to the bottom eye of the pendant using a choker hitch, while the hook end is attached to the load.

b. The pendant and legs are made from double braided nylon rope, allowing them to stretch as the helicopter picks up the load, absorbing some of the “G” force, and reducing stress on the helicopter.

c. Hoisting slings come in three sizes:

(1) Mk 105: (incompatible with H-65 and SH-2 cargo hooks) loads up to 6,000 lb (with one to six legs) (Figure 10-5). Legs for the Mk 105 sling come in two lengths:

(a) Regular (6 feet long), color-coded orange.

(b) Long (10 feet long), color-coded green.

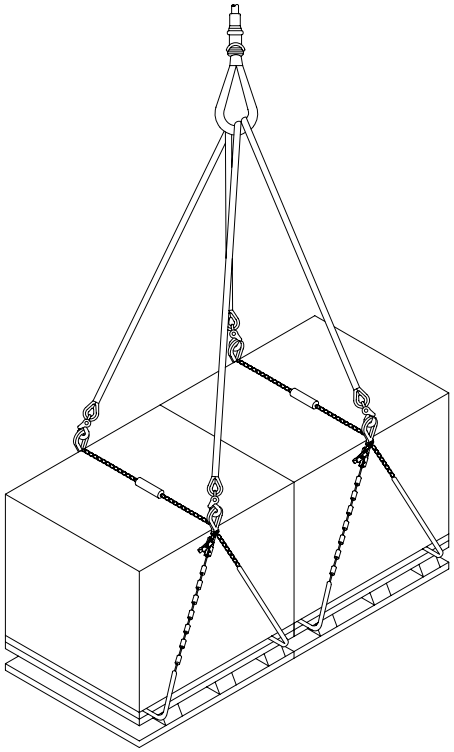

cg9100069a

Figure 10-5. Mk 105 Hoisting Sling (Multi-Pole Pendant) Attached to Two Adjustable Pallet Slings

(2) Mk 128 Mod 0: loads up to 4,000 lb (1 to 2 legs) (Figure 10-6).

(3) DSG-12-5K: may be used in lieu of the Mk 128 Mod 0.

CAUTION

WHEN USING ONLY ONE LEG WITH THE MK 105 HOISTING SLING, THE MAXIMUM SAFE WORKING LOAD IS REDUCED TO 3,000 LB.

CAUTION

THE MK 105 SLING IS INCOMPATIBLE WITH H-65 AND SH-2 CARGO HOOKS.

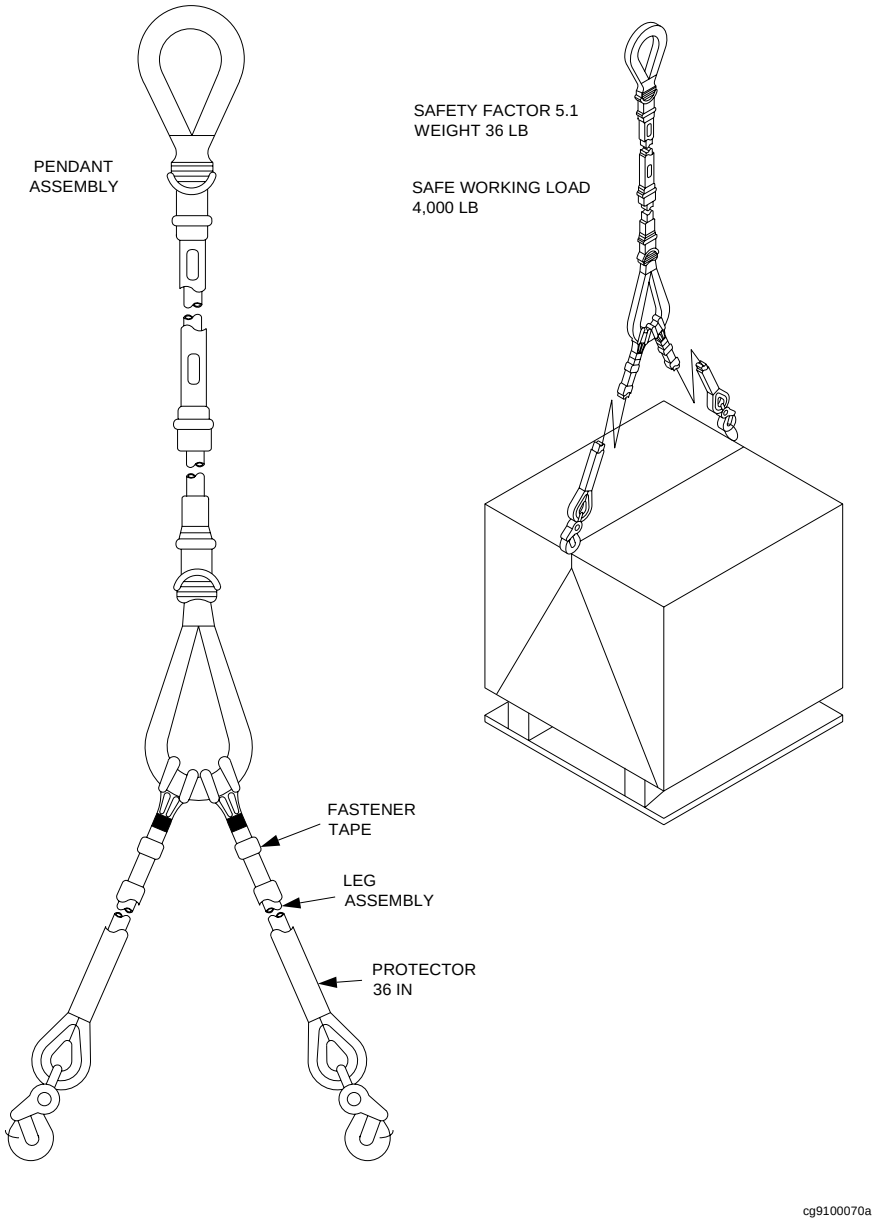

Figure 10-6. Hoisting Sling Mk 128

7. Cargo Hooks. The cargo hook will vary from helicopter to helicopter but will be similar to those shown in Figure 10-7. The hookup crew shall be briefed on the operation of the specific cargo hook in use before conducting VERTREP operations.

WARNING

WHEN THE CARGO HOOK IS INSTALLED ON THE H-65, THE WHEELS SHALL REMAIN DOWN AT ALL TIMES. AN INADVERTENT WHEELS-UP LANDING COULD CAUSE THE CARGO HOOK TO PUNCTURE THE FUEL BLADDER IN THE HELICOPTER.

WARNING

WHEN NOT USING THE MK 105, DSG-12-5K, OR MK 128 HOISTING SLINGS, THE CARGO HOOK SHALL BE GROUNDED TO THE CUTTER BEFORE HOOKING UP AN EXTERNAL LOAD. FURTHERMORE, THE GROUNDING WAND SHALL REMAIN IN CONTACT WITH THE CARGO HOOK UNTIL THE HOOKUP IS COMPLETED. THE DISCHARGE OF STATIC ELECTRICITY CAN EXCEED 200,000 VOLTS. IF DISCHARGED THROUGH PERSONNEL, IT CAN CAUSE SERIOUS INJURY OR DEATH.

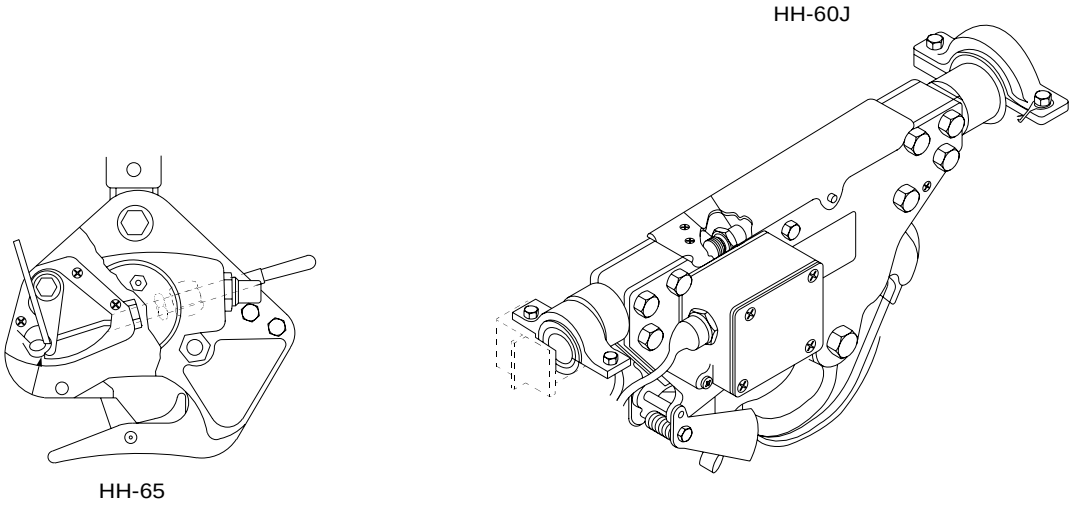

cg9100071a

Figure 10-7. Cargo Hooks

F. VERTREP LOAD PREPARATION.

1. Overview. The primary goal of load preparation is to provide a load that will ride safely in flight, and arrive at the destination undamaged. External loads are subject to extremely high winds during transportation, and shall be prepared accordingly.

2. VERTREP Load Weight and Identification. Loads should be combined to achieve the efficient transfer of cargo. As each load is assembled, mark it with the weight and any other required information for the helicopter crew and receiver. Use chalk, a felt-tip marker, or securely attached tags. Color-coding is recommended to ease identification. Loads can then be combined to achieve the best distribution of weight for each lift, as determined by the pilots.

CAUTION

WHEN COMBINING LOADS, THE LOADS SHOULD BE OF THE SAME APPROXIMATE SIZE AND WEIGHT TO REDUCE THE POSSIBILITY OF TIPPING OVER DURING PICKUP OR DELIVERY.

NOTE

The height of the load must allow the hookup crew to complete the hookup without climbing on top of the load.

3. VERTREP Pallet Assembly. Loosely packed loads on pallets are safety hazards, and shall not be transported by helicopter. Pallet loads shall be prepared as follows:

   a. Tightly band pallet loads. Use sufficient banding to provide proper security. Strap loads to the pallets, using nylon straps, to prevent the loads from shifting in flight and while being moved by a forklift.

   b. Interlace load layers wherever possible.

   c. Individually strap small boxes and crates directly to pallets to provide a stable and secure load.

   d. Check the integrity of loads palletized elsewhere. Reband or restrap the loads as necessary.

4. Cargotainer Loading. Cargotainer loads shall be prepared as follows:

   a. Raise and lock the sides of the cargotainer before loading the cargo. Check that the sides remain securely locked after loading.

   b. Place lightweight items near the top of the cargotainer, and use strapping or some other covering to keep them secured during flight.

5. Cargo Net Loading (Loose Cargo). Use cargo nets for transporting awkward-sized material that cannot be secured to a pallet. The loads shall be prepared as follows:

   a. Avoid lightweight (less than 150 lb) loads because of their instability during flight.

b. Do not load small cartons on the bottom of the net where they could be forced out of the openings in the net.

c. Cover or secure together lightweight or small items to keep them from blowing out of the net.

d. Secure the net corner rings with a becket.

(1) Once they are packed together, place them on top of the larger loads.

(2) One method of safeguarding small items against loss in flight is to secure the corners of the net together by taking opposite corner rings and weaving them through at least two web straps in the webbing below the opposite rings. Figure 10-8 illustrates this procedure.

(3) Fasten the sling leg through all four corner rings.

(4) When the helicopter lifts the net, the weight of the load will cinch the net tight and prevent losing items through the net.

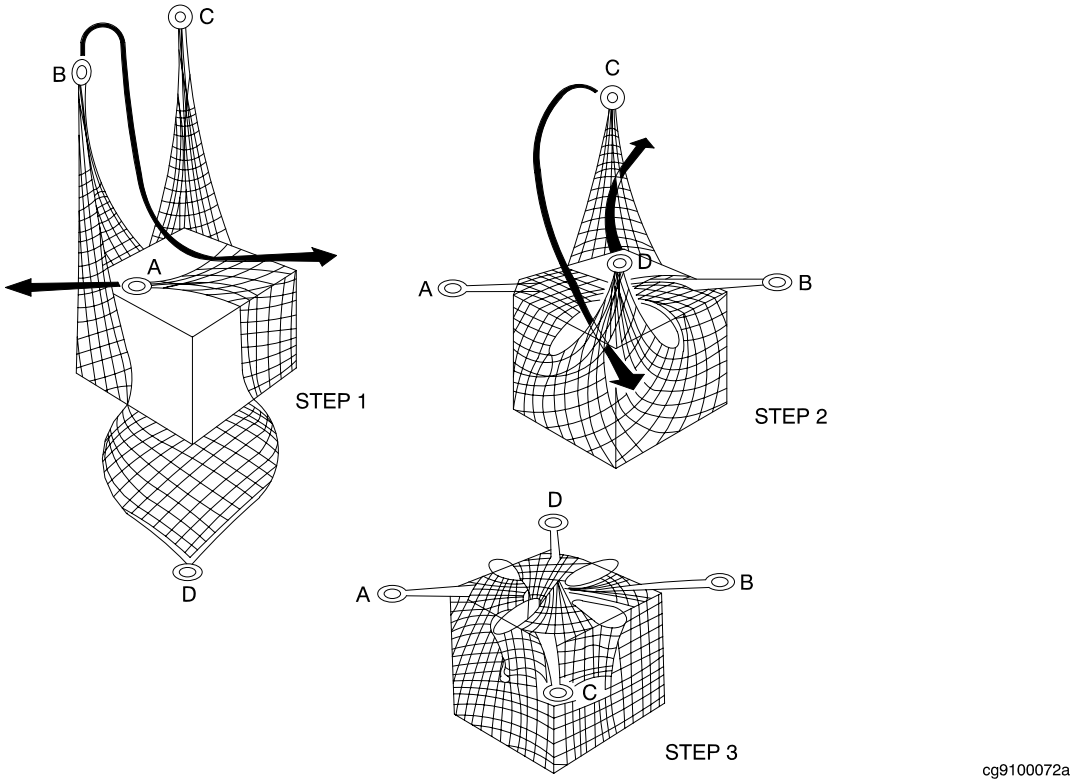

Figure 10-8. Securing Cargo Net with Loose Cargo

WARNING
LIGHTWEIGHT LOADS CAN BE BLOWN UP INTO THE BOTTOM OF THE HELICOPTER, OR FLY UP INTO THE ROTOR BLADES.

6. Cargo Net Loading (Palletized Cargo). The following procedures shall be used when loading palletized cargo in cargo nets:

   a. Band or strap the cargo to the pallet (refer to Paragraph 10.F.3. of this chapter).

   b. Lay out the cargo net and place the loaded pallet in the center.

   c. Draw the net up around the load, and lay the corners of the net loosely on top.

   d. Secure the net corner rings with a becket.

   e. When moving the load by forklift, insert the forklift tines carefully through the net webbing and into the pallet.

WARNING

DO NOT PLACE A PALLETIZED LOAD CONTAINED IN A CARGO NET, ON TOP OF ANOTHER PALLET FOR MOVEMENT BY A FORKLIFT. WHEN THE HELICOPTER LIFTS THE LOAD, THE ROTOR WASH MAY CAUSE THE OTHER PALLET TO BECOME AIRBORNE.

7. Attaching Slings to Loads.

   a. Adjustable Pallet Slings. Individual, rectangular-shaped loads sized to fit a pallet (such as palletized ordnance) may be transported without using a cargo net by using a pallet sling (Figure 10-9) as follows:

      (1) Select the proper sling length (color-coded) according to the height of the load.

      (2) Pass each loop of the sling under the overhang made by the upper boards on the sides of the pallet.

      (3) Pass each sling basket leg under the wings on each side of the pallet.

      (4) Pull the ends of the sling legs containing the swage stops through the sling tensioners until the bridle is tight across the top of the load and the slack is out of the sling.

      (5) Adjust the sling to center so that the lifting thimbles are of equal height from the pallet.

      (6) Place each tensioner over the nearest swage stop, lower the latch to the stirrup, and lock the tensioner.

   b. Hoisting Slings. When attaching the hoisting sling to the load, a separate leg is used for each attachment point, and all of the extra legs are removed.

      (1) Cargo nets are lifted by the eye of the becket, using a single leg.

      (2) When using the Mk 105 hoisting sling with more than one leg, ensure all of the legs are the same length.

(3) After the hooks are attached, ensure the legs cannot snag on the load and tip it over during pickup.

CAUTION

WHEN USING ONLY ONE LEG WITH THE MK 105 HOISTING SLING, THE MAXIMUM SAFE WORKING LOAD IS REDUCED TO 3,000 LB.

c. Safety Hooks. The safety hook is the only moving part on the hoisting sling. It is correctly operated as follows (Figure 10-10):

(1) To open the hook, grasp it in one hand, and the yoke in the other. Twist the hook and yoke sideways in opposite directions to release the locking lug; then pull the hook and yoke apart until fully open.

(2) To close the hook, simply press the yoke down over the hook.

CAUTION

THE LAST SWAGE STOP IN EACH SLING LEG IS A SAFETY BEAD AND SHALL NOT BE USED TO TENSION THE SLING.

CAUTION

NEVER ATTACH THE SAFETY HOOK TO ANY POINT OTHER THAN THE DESIGNATED ATTACHMENT POINT. NEVER CONNECT A LOAD IN ANY WAY OTHER THAN DIRECTLY TO THE SAFETY HOOK. KINKING AND CHAFING WILL DAMAGE THE LIFTING EQUIPMENT.

8. Non-Standard Loads. Large, bulky, or odd-shaped loads that cannot be carried on a pallet, in a cargotainer, or in a cargo net, shall be provided with slings or lifting eyes so the hoisting sling can be attached directly to the load.

WARNING

THE PILOT SHALL ALWAYS BE CONSULTED BEFORE TRANSFERRING ANY NONSTANDARD LOAD.

CAUTION

WHEN RIGGING A NONSTANDARD LOAD, CAREFULLY INSPECT THE ATTACHMENT POINTS ON THE LOAD TO ENSURE THEY ARE INTENDED FOR THAT PURPOSE. WHAT APPEARS TO BE A LIFTING EYE OR ATTACHMENT POINT MAY BE INTENDED FOR ANOTHER PURPOSE (I.E., A TIEDOWN POINT), AND MAY NOT BE STRESSED FOR HELICOPTER LIFTING.

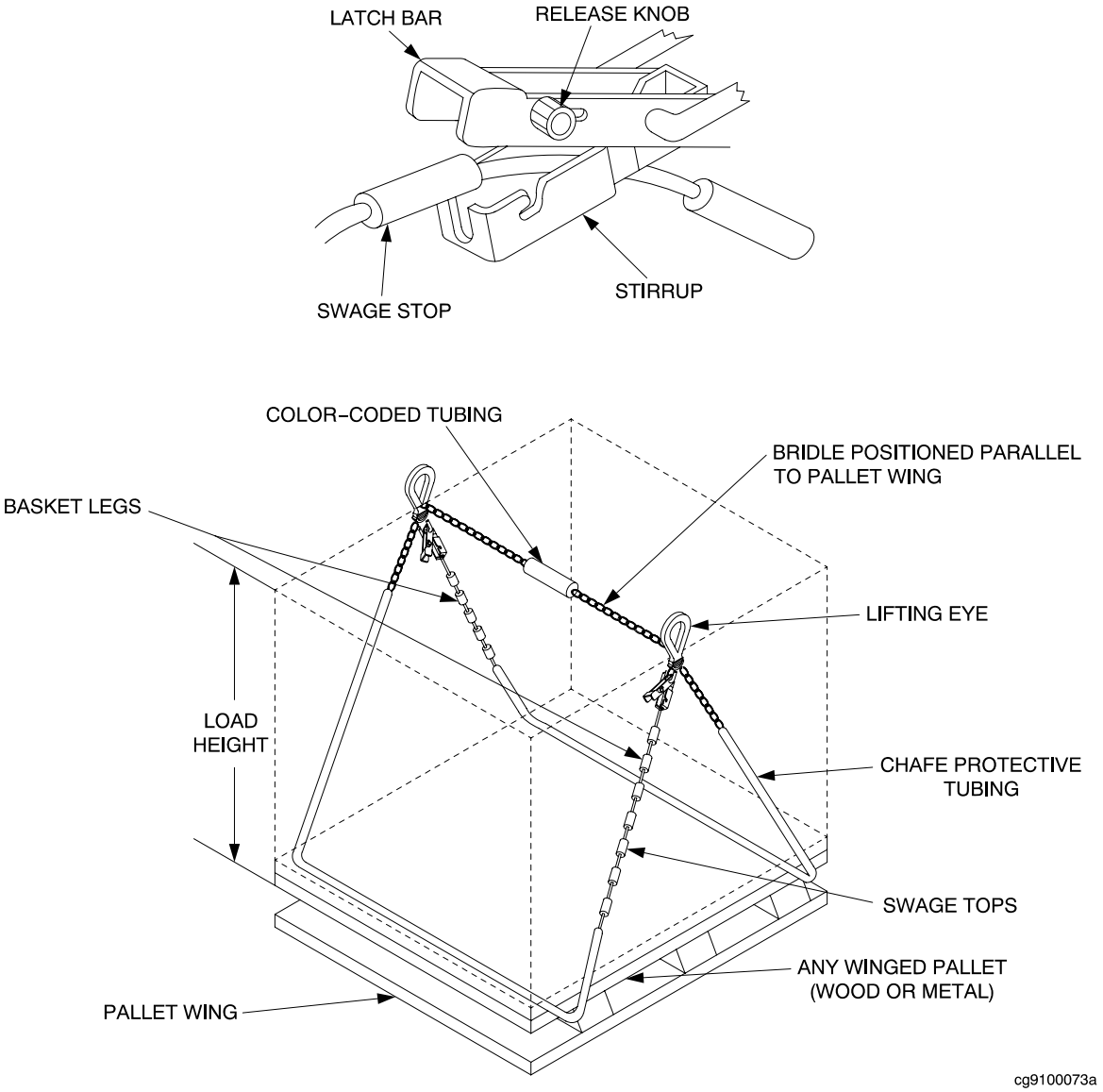

Figure 10-9. Adjustable Pallet Sling Mk 85, 86, 87, and 100

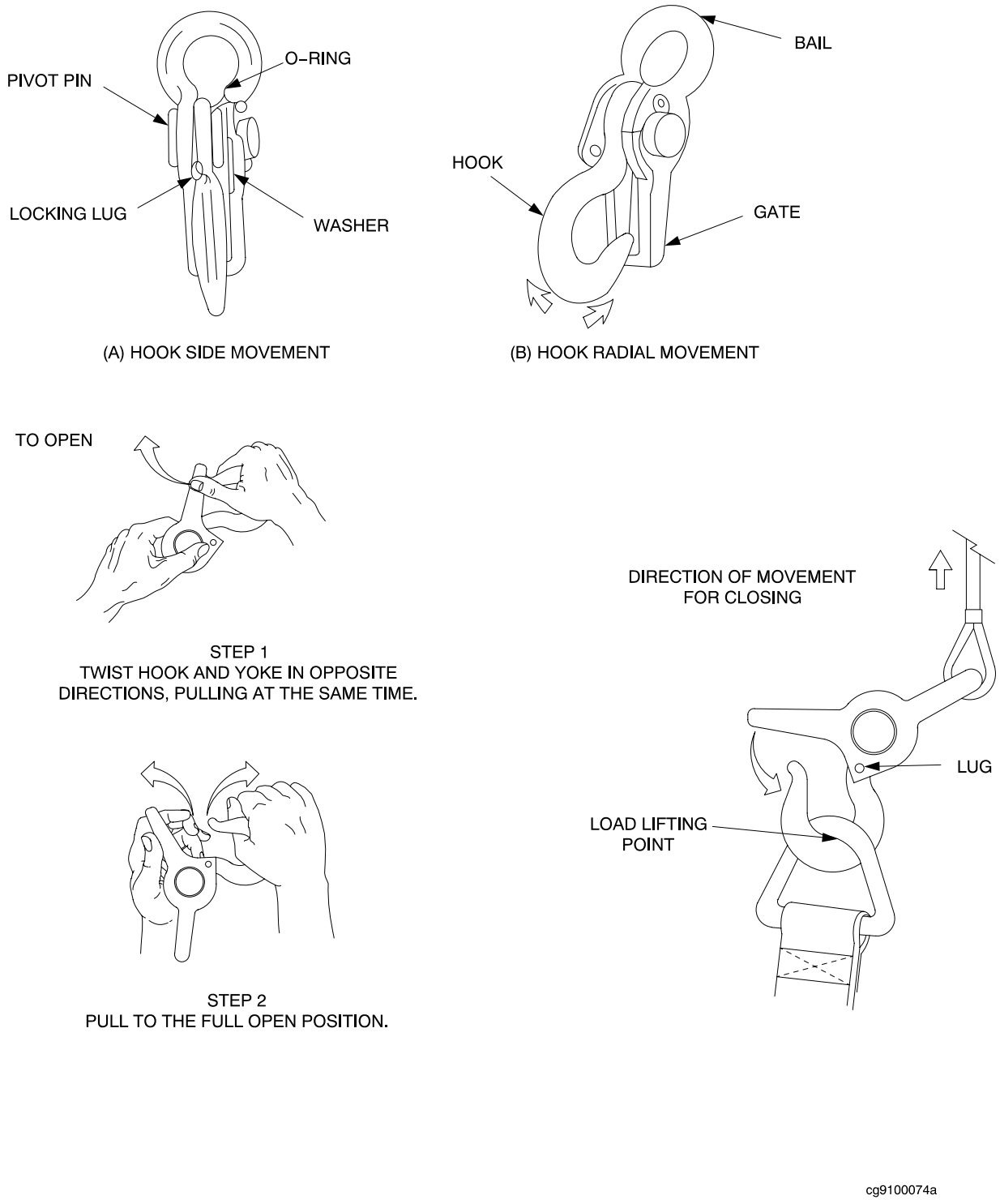

Figure 10-10. Operation of Safety Hook

9. VERTREP Cargo Staging. Before actual VERTREP operations, the maximum possible amount of cargo is staged on the flight deck. Primary considerations in preparing and executing the flight deck cargo plan (staging) are:

   a. If the helicopter is to takeoff or land, cargo shall be staged at least 10 feet outside of the peripheral lines (to provide minimum buffer distance). Otherwise, it shall be staged within the peripheral lines, aft of the VERTREP T-Line.

   b. Sufficient room shall be left between loads for the hookup crew to move about, and to have an emergency escape route. Additionally, room between loads reduces the possibility of a load snagging an adjacent load during pickup.

   c. To prevent cargo from blowing into the helicopter's rotors, tarpaulins used to cover staged VERTREP loads shall be tied down. The loads shall then be covered by cargo nets secured to the deck.

   d. Internal loads: personnel, mail, movies, and other high value items (size dependent) shall be transported internally.

      (1) Other cargo may be transported internally, although internal loads are usually far more time consuming than external loads.

      (2) When a suitable landing site is not available, internal loads may be delivered using the rescue hoist (if installed), or, in the case of very light loads, by using a hand line.

      (3) The typical helicopter rescue hoist has a capacity of 600 lb.

WARNING
DO NOT ATTACH THE HOIST CABLE TO THE CUTTER.

G. VERTREP PROCEDURES.

1. Overview. FLICON THREE is set for all VERTREP operations involving the cargo sling (FLICON FIVE is set for hoist operations). See, Table H-6 for an HCO VERTREP checklist.

WARNING
ENSURE THAT ALL STAGED LOADS ARE PROPERLY SECURED AND FREE FROM FOD.

WARNING
DURING VERTREP OPERATIONS, THE HANGAR SHALL BE FULLY RETRACTED (UNLESS THE CUTTER IS SPECIFICALLY CERTIFIED FOR VERTREP WITH THE HANGAR EXTENDED). THE HANGAR DOOR SHALL BE CLOSED DURING VERTREP.

WARNING

ROTOR WASH FROM HOVERING HELICOPTERS, PARTICULARLY FROM LARGE HELICOPTERS, CAN BE SEVERE IN LIGHT RELATIVE WIND CONDITIONS. THE LSO SHALL BRIEF ALL PERSONNEL INVOLVED IN VERTREP OF THIS HAZARD BEFORE COMMENCING OPERATIONS.

2. VERTREP Pickup.

   a. The helicopter will normally complete the approach into the wind, arriving in a hover just off the cutter.

   b. The approach of the helicopter is announced over the cutter's PA system (1MC).

   c. All personnel clear the landing and pickup zone, except the hookup crew, which takes position forward of the forward peripheral line.

   d. Before moving in to pick up each load, the pilot(s) are informed of the destination and weight of the load.

   e. Pilot, when ready, transmits on the radio: "REQUEST PERMISSION TO HOVER FOR VERTREP."

   f. HCO replies: "ROGER, YOU ARE CLEARED TO HOVER FOR VERTREP. TAKE SIGNALS FROM THE LSO," then changes the deck status light to GREEN (except for nighttime operations).

   g. LSO replies: "LSO ROGER." With the hookup crew in position, the LSO begins giving advisory signals to position the helicopter over the load.

   h. The pilot, using advisories from the LSO and commands from the helicopter crewmember, maneuvers the helicopter over the load.

   i. Once in stable hover over the load, the pilot reports over the radio, "READY FOR HOOKUP." The LSO replies, "ROGER READY FOR HOOKUP," then signals the hookup team into position under the helicopter. Once able to reach the aircraft cargo hook, the hookup crew grounds the hook (if required), hooks up the pendant, and returns to a position next to the LSO. After the load is hooked up and the hookup crew is clear, the helicopter crewmember (and LSO) gives directions (advisories) to pick up the load and to clear the cutter.

WARNING

THE LSO SHALL BE STATIONED FORWARD OF THE VERTREP "T-LINE" AND SHALL BE POSITIONED WHERE BEST SEEN BY THE PILOT. THE PILOT SHALL ATTEMPT TO MAINTAIN VISUAL CONTACT WITH THE LSO AT ALL TIMES. IF THE PILOT LOSES SIGHT OF THE LSO, PAC SHALL ADVISE THE HELICOPTER CREWMEMBER WHO WILL RELAY THE LSO SIGNALS.

WARNING

THE HOOKUP CREW SHALL NEVER STAND ON THE LOAD OR BETWEEN THE LOAD BEING PICKED UP AND ANOTHER LOAD.

WARNING

WHEN NOT USING THE MK 105, DSG-12-5K, OR MK 128 HOISTING SLINGS, THE CARGO HOOK SHALL BE GROUNDED TO THE CUTTER BEFORE HOOKING UP AN EXTERNAL LOAD. FURTHERMORE, THE GROUNDING WAND SHALL REMAIN IN CONTACT WITH THE CARGO HOOK UNTIL THE HOOKUP IS COMPLETED. THE DISCHARGE OF STATIC ELECTRICITY CAN EXCEED 200,000 VOLTS, AND, IF DISCHARGED THROUGH PERSONNEL, CAUSE SERIOUS INJURY OR DEATH.

NOTE

Radio communications with the helicopter while it is in a hover over the VERTREP zone are distracting, and should be limited to urgent communications only.

NOTE

The helicopter crewmember is the primary director of the helicopter once it is in a hover over the VERTREP area. However, the LSO shall continue to give advisory signals in case of internal communications failure or other emergencies that the pilot or aircrew are unaware.

3. VERTREP Delivery.

   a. The helicopter will normally complete the approach into the wind, arriving in a hover just off the cutter.

   b. When the approach of the helicopter is announced over the cutter PA system (1MC), all personnel shall clear the VERTREP area.

   c. Pilot, when ready, transmits on the radio, “REQUEST PERMISSION TO HOVER FOR VERTREP.”

   d. HCO replies, “ROGER, YOU ARE CLEARED TO HOVER FOR VERTREP. TAKE SIGNALS FROM THE LSO,” then changes the deck status light to GREEN (except during nighttime operations).

   e. HCO passes to the flight deck: “HELO IS CLEARED TO HOVER FOR VERTREP.”

   f. LSO begins giving advisory signals to position the helicopter for delivery.

   g. Pilot, using advisories from the LSO and commands from the helicopter crewmember, maneuvers the helicopter over the VERTREP area.

h. Helicopter crewmember gives directions for spotting and lowering the load. As soon as the load is on deck, the crewmember informs the pilot.

i. When the pendant slackens, the LSO signals the pilot to release the load. The pilot or crewmember (as briefed) releases the cargo hook.

WARNING

ONCE THE HELICOPTER HAS BEEN CLEARED TO HOVER, PERSONNEL SHALL NOT ENTER THE VERTREP AREA UNTIL AFTER THE LOAD IS ON DECK. NO ATTEMPT SHALL BE MADE BY PERSONNEL TO STEADY THE LOAD DURING DELIVERY.

WARNING

THE LSO SHALL BE STATIONED FORWARD OF THE VERTREP "T-LINE" WHERE BEST SEEN BY THE PILOT. THE PILOT SHALL ATTEMPT TO MAINTAIN VISUAL CONTACT WITH THE LSO AT ALL TIMES. IF THE PILOT LOSES SIGHT OF THE LSO, HE/SHE SHALL ADVISE THE AIRCREW WHO WILL RELAY THE LSO SIGNALS.

WARNING

THE PILOT SHALL MANEUVER THE HELICOPTER SO TO BE ABLE TO SEE AND AVOID ALL OBSTRUCTIONS.

WARNING

RELEASING THE LOAD BEFORE THERE IS SLACK IN THE PENDANT CAN CAUSE DAMAGE TO THE AIRCRAFT, CUTTER, LOAD, AND/OR INJURY TO PERSONNEL.

NOTE

The sling may not immediately release from the aircraft cargo hook. If the sling hangs up, the pilot shall initiate a slow vertical climb, gradually applying tension until it separates from the hook.

4. Clearing the VERTREP Area.

a. After the helicopter has delivered each load and departed, cargo handlers break down the load and relocate it clear of the VERTREP area.

b. Empty nets, pallets, and cargo containers are relocated clear of the VERTREP area.

c. If the helicopter returns with another load before the previous load is cleared, and if space is available for additional cargo, the load being worked should be temporarily secured. All personnel shall then clear the area while the next load is delivered. Speed is second only to safety in clearing the VERTREP area.

(1) Secure loads delivered in cargo nets by pulling the net over the load and threading a strap through the net ends.

(2) Secure loads delivered in cargotainers by raising and locking the sides of the cargotainer, securely covering the top.

(3) Secure loads on pallets by covering them securely with a cargo net.

WARNING

PERSONNEL CLEARING CARGO SHALL TAKE EXTRA PRECAUTIONS TO REMOVE BANDING STRAPS, PAPER, AND OTHER DEBRIS FROM THE VERTREP AREA BEFORE THE NEXT HELICOPTER APPROACH, TO PRECLUDE INJURY TO PERSONNEL OR DAMAGE TO HELICOPTER ENGINES AND ROTOR BLADES.

CAUTION

NETS, BECKETS, AND CARGO WRAPAROUND STRAPS SHALL NEVER BE CUT.

NOTE

A loaded helicopter shall not be waved off solely because the VERTREP area has not been completely cleared of the previous load.

5. Returning VERTREP Equipment to its Custodian. As cargo nets, cargotainers, pallets, and hoisting slings accumulate at the delivery point, they should be prepared for return to their custodian.

a. Pallets.

(1) Stack pallets to make up a load between 16 and 68 inches high. Fourteen wooden pallets, or six or more metal pallets may be stacked to make up a load (see Figure 10-11).

(2) Rig the pallets with an appropriate sized pallet sling.

(3) Attach a hoisting sling (with two legs) to the pallet sling.

CAUTION

WHEN PREPARING TUBULAR STEEL PALLETS FOR RETURN, USE A MINIMUM OF SIX PALLETS PER STACK TO ENSURE FLIGHT STABILITY.

NOTE

Helicopter load limits allowing up to three stacks of pallets may be returned simultaneously by using six legs (of equal length) on the hoisting sling.

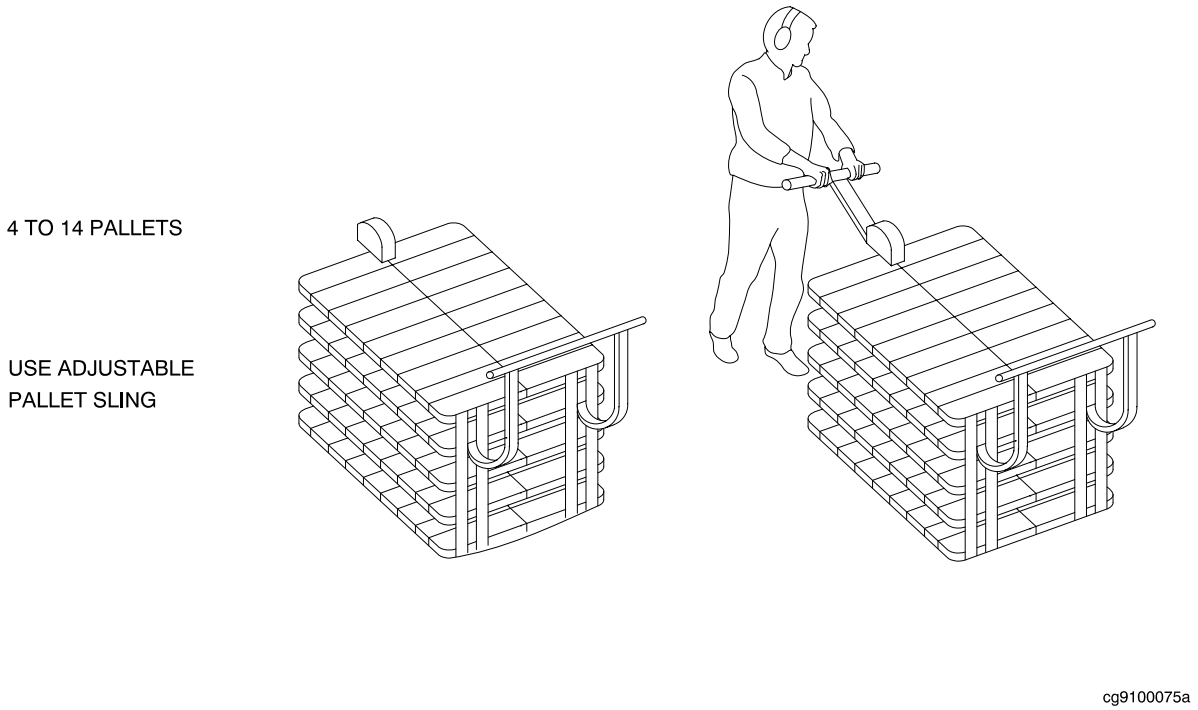

Figure 10-11. Stacking Pallets in Packs

b. Cargo Nets and Pallets.

(1) Stack four or more wooden pallets, or six or more metal pallets in the center of a cargo net, with the sides of the pallet turned 45 degrees to the sides of the net (Figure 10-12).

(2) Fold any additional cargo nets to the same size as the pallets, and place them on top of the pallets.

(3) Pull the net corners up and around the load, and secure the rings with a becket.

(4) Attach a hoisting sling to the becket using a single leg.

WARNING

DO NOT, UNDER ANY CIRCUMSTANCE, HOOK AN EMPTY CARGO NET TO THE HELICOPTER. THE NET MUST CONTAIN AT LEAST FOUR WOODEN OR SIX METAL PALLETS (OR AN EQUIVALENT WEIGHT) TO KEEP IT FROM BLOWING INTO THE HELICOPTER ROTORS.

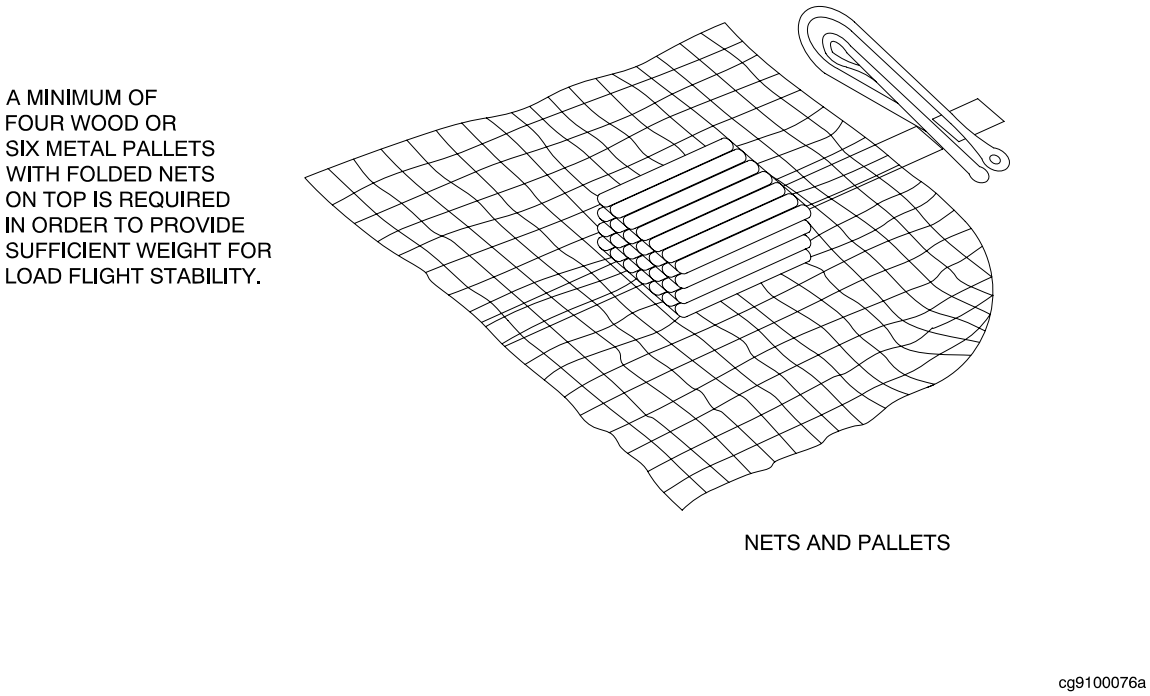

Figure 10-12. Positioning Pallets in Net

CAUTION

IF THE CARGO HANDLING PROCEDURES ARE NOT FOLLOWED, DAMAGE TO THE HELICOPTER, LOSS OF EQUIPMENT, AND INJURY TO PERSONNEL COULD RESULT.

c. Cargotainers.

(1) Fold and place extra cargotainer straps and hoisting slings inside a single cargotainer.

(2) Cover the top of the cargotainer securely.

(3) Attach a hoisting sling to the cargotainer using four legs.

d. Hoisting Slings.

(1) Thread the single leg of a hoisting sling through the eyes of at least ten other hoisting sling pendants, and hook the safety hook back around the leg (Figure 10-13).

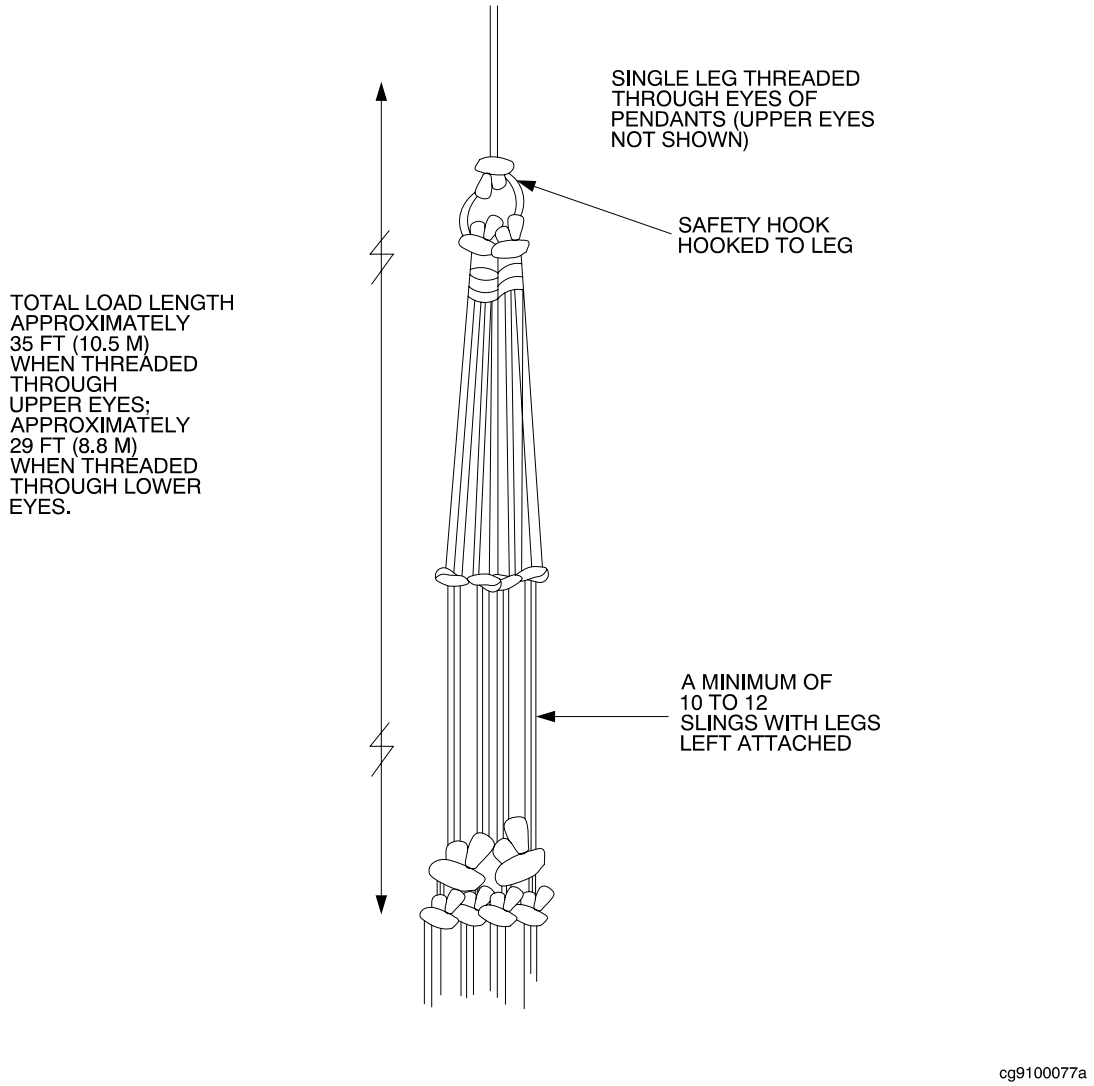

Figure 10-13. Slings and Pendants

(2) Secure the loose legs of the pendants by wrapping one of the legs around all of the other, hooking its safety hook to itself.

6. VERTREP with Non-Flight Deck Equipped Vessels. VERTREP deliveries may be conducted with vessels that are not certified or qualified provided a 15-foot obstruction clearance can be maintained at all times. At least one pilot shall hold an aircraft commander designation. These operations are restricted to day VMC and should not be conducted above Sea State 4 without Air Station and cutter CO approval. Aircraft may continue to hoist to any vessel day or night. This policy is limited to CG Aircraft operating with CG cutters. Before

any VERTREP operations, a thorough brief shall be conducted to include at a minimum the following items:

a. Pick up and drop off areas shall be suitable to both the cutter CO and the Aircraft Commander.

b. Procedures for unhooking loads.

c. Load weight shall be at least 150 lb.

d. Cutter shall conduct a FOD walk down of the entire topside area before commencing operations.

e. Procedures to follow in the event of an emergency.

f. Relative wind direction for drop off.

g. VERTREP equipment pallets, slings, nets, etc. shall be determined before commencing operations.

h. VERTREP loads shall be prepared IAW Paragraph 10.F.

i. Cargo should be staged before VERTREP operations.

j. Ensure all VERTREP loads are properly secured and free of FOD.

k. The approach of the helicopter shall be announced over the cutter's PA system (1MC).

l. Only personnel needed to conduct VERTREP operations should be allowed on deck.

m. Before moving in to deliver each load, the helicopter shall be cleared by the cutter.

n. Hookup crew shall never stand on the load or between the load being picked up and another load.

o. Hookup crew shall be aware of the danger associated with static discharge and use proper protective equipment.

p. Helicopter aircrew will give directions to the pilot to position the aircraft over the load.

H. NIGHTTIME VERTREP.

1. Overview. The primary difference between daytime and nighttime VERTREP is a reduction in the speed of the operation because of reduced visibility. Night VERTREP is performed in the same manner as day VERTREP subject to the limitations set forth in this chapter.

NOTE

The final decision regarding the helicopter ability to safely VERTREP a particular cutter at night rests with the pilot.

2. Factors Affecting Nighttime VERTREP.

a. Since night flying offshore is essentially instrument flying, the helicopter shall be capable of instrument flight.

b. Adverse weather conditions further reduce night VERTREP capabilities.

c. Cutters certified for nighttime helicopter operations (Level I and Level II) are properly lighted for VERTREP.

WARNING

UNDER NO CIRCUMSTANCE SHALL FLASH PICTURES BE TAKEN DURING NIGHT VERTREP SINCE THE FLASH MAY TEMPORARILY BLIND THE PILOTS.

WARNING

FOR NIGHTTIME VERTREP ALL NVG COMPATIBLE FLIGHT DECK LIGHTING SHALL BE TURNED UP TO 100% INTENSITY BEFORE PERSONNEL ARE DIRECTED TO CONNECT OR DISCONNECT THE LOAD.

3. VERTREP Nighttime Procedures. The same procedures are used for both day and night VERTREP but with a wider pattern being flown and greater care and precision being exercised at night. Consequently, delivery rates at night are slower than during daylight operations. In addition:

a. The cutter maintains a course, keeping the cutter stack gases clear of the VERTREP area, and pilots avoid flying through the stack gases during the approach. Stack gases reduce visibility and may cause spatial disorientation.

b. LSO uses night signal wands for helicopter directions.

c. Information concerning destination, bearing and distance, load weight, etc., is transmitted to the helicopter by radio.

d. Blue or green Chemlights are worn by the hookup crew to help the helicopter crewmember identify the correct load.

e. If practicable, a blue or green Chemlight shall be securely attached to the load to aid the LSO in maintaining visual contact while ensuring the height of the load above the deck.

f. Deck status light are not used.

CHAPTER 11. HELICOPTER SECURING AND TRAVERSING.

A. INTRODUCTION. After a helicopter has landed on a cutter, it shall be tied down to ensure its safety. TALON is the preferred method to secure the H-65. For all other helicopters, tiedowns are initially installed as rapidly as possible, with the helicopter's rotors turning, to provide stability in the event of excessive flight deck motion. Secondary tiedowns are installed after the helicopter is shut down, to provide greater security for extended periods of stay and during periods of inclement weather.

NOTE

Cutters moored pier side or icebreakers hove to in the ice, the use of tiedowns and tiedown crews may be omitted with the concurrence of the CO and the Senior Aviator. The flight deck shall be free of ice and snow to operate without tiedowns.

B. IN THIS CHAPTER. This chapter discusses the following topics:

1. General Information.
2. Mooring Aids.
3. Primary Tiedowns (including TALON).
4. Secondary Tiedowns.
5. Heavy Weather Tiedowns.
6. Blade Security.
7. Traversing.
8. Helicopter Security.

C. GENERAL INFORMATION.

1. Securing for Sea. On hangar equipped cutters, the helicopter SHALL be moved into the hangar at the end of the day's planned flight operations. The cognizant area commander may grant a waiver of this requirement to meet a significant and specific operational need. On cutters without hangars, the helicopter is secured for sea in the landing position.

   a. Hangar clearances requirement:. Horizontal within the hangar (aircraft in stowed position): 27 inches (0.69 m) all around the aircraft between the deck and a height of 6 feet 8 inches (2.08 m). Above this area, 18 inches (0.46 m) all around the aircraft.

2. Severe Weather Considerations. Helicopters are subject to damage and significant corrosion problems when exposed to the sea environment during periods of severe weather. When the helicopter cannot be hangared, strong consideration should be given to relocating the helicopter to shore, if a suitable divert airfield is available. Otherwise, consideration should be given to remove those components likely to be damaged (such as rotor blades and stabilizers).

WARNING

THE H-60 CANNOT BE TRAVERSED, WHICH ELIMINATES HANGARING, AND CANNOT BE SECURED FOR HEAVY WEATHER CONDITIONS. DAMAGE OR LOSS OF THE AIRCRAFT IS LIKELY IN SEAS ABOVE SEA STATE THREE. SEA STATES 0-8 ARE DEFINED IN Table 11-1.

Table 11-1. WIND-SEA STATE

Sea State	Sea Description	Wind Description	Velocity Range (kts)	Wave Height (Average)	Wave Height (Maximum)
0	Sea may look like a mirror or small ripples with appearance of scales, but without foam crest	Calm to Light Airs	0-3	0	Less than 6 inches
1	Wavelets that are short but pronounced. Crests may begin to break. Perhaps very few scattered whitecaps.	Light to Gentle Breeze	4-9	6 inches	1
2	Large wavelets or small waves, becoming larger. Fairly frequent whitecaps.	Gentle to Moderate Breeze	10-13	2	3
3	Small waves becoming larger. Frequent whitecaps.	Moderate Breeze	14-16	3	5
4	Moderate waves, pronounced long foam. Many whitecaps. Chance of some spray.	Fresh Breeze	17-19	4.5	7
5	Moderate to large waveform. White foam crests are more extensive everywhere. Probability of some spray.	Fresh to Strong Breeze	20-24	8	12

Table 11-1. WIND-SEA STATE Continued

6	Large waves. Sea heaps up. White foam from breaking waves begins to be blown in streaks along the direction of the wind. May begin to see spindrifts.	Strong Breeze	25-28	11	18
7	Sea heaps up. Streaks along the direction of wind. Moderately high waves of greater length. Edges of crest break into spindrift. The foam is blown in well-marked streaks along wind direction.	Moderate to Fresh Gale	29-38	25	40
8	High waves. Dense streaks of foam along the direction of wind. Sea begins to roll. Visibility limited.	Strong Gale	39-44	36	58

D. MOORING AIDS.

1. Overview. Mooring aids consist of those items, both permanently installed and portable, which are used for securing a helicopter on a cutter.

2. Cutter Tiedown Points. Reinforced tiedown points are installed in the flight deck, hangar deck, helicopter traversing areas, and hangar bulkheads.

   a. Types of Tiedown Points. The following types of tiedown points are installed on cutters:

      (1) Flush deck bar-type fittings.

      (2) Flush deck cloverleaf fittings (recessed mushrooms).

      (3) Raised deck cloverleaf fittings (raised deck mushrooms).

      (4) Coaming sockets (keyhole fittings).

      (5) Five reversible deck bolt pad eyes (Baxter bolts).

      (6) Fixed pad eyes.

      (7) Bulkhead bar-type fittings.

b. Tiedown Points and Equipment Compatibility.

(1) Cloverleaf fittings and coaming sockets are designed to accept bulb hooks.

(2) Bar-type fittings are designed to accept open hooks.

(3) Pad eyes may require shackles to make them compatible with open hooks.

NOTE

WMEC 270 cutters feature both bar-type and raised cloverleaf tiedown fittings. Primary tiedowns shall be initially assembled using open hooks. After the helicopter is shut down and secondary tiedowns have been attached, any tiedowns leading to cloverleaf fittings shall be reset with bulb hooks.

c. TALON Grid. The TALON grid is a 6-foot diameter honeycomb grid made of high strength stainless steel. The TALON is mounted in a trough in the flight deck, flush with the deck, near the center of the landing circle. The grid provides a securing point for the self-contained, hydraulically powered, pilot-activated, helicopter securing system (TALON) installed on the H-65. A stainless steel grid cover, coated with flight deck nonskid, keeps the grid trough free of FOD, and preserves nonskid and VLA continuity during operations with non-TALON-equipped helicopters.

3. Helicopter Tiedown Points. Mooring rings are installed at reinforced points on the fuselage and landing gear for securing the helicopter.

4. Tiedown Assemblies. Helicopters are secured to the cutter using primary and secondary tiedown assemblies. Figure 11-1 through Figure 11-6 depict the tiedown configurations for H-65 and H-60 helicopters. Figure 11-4 shows the chocks and chains for the H-60 helicopter. Tiedown configurations for other helicopters can be found in NAVAIR 00-80T-122.

5. Primary Tiedowns.

a. Primary tiedowns are unique to the Coast Guard and are used for providing initial security upon landing. Primary tiedowns provide sufficient security for rotor disengagement and for holding the helicopter on deck during normal flight deck motion. On TALON equipped H-65s, TALON is the primary means of securing.

b. During flight operations not involving TALON, primary tiedowns are required for operations above general limits, engine and rotor shutdown, and when the helicopter remains on deck for more than just a moment.

c. Primary tiedowns shall be used in conjunction with secondary tiedowns for heavy weather, long term, or overnight security.

d. Primary tiedowns may be used in conjunction with TALON after aircraft shutdown or before aircraft startup to provide additional security. If primary tiedowns are installed in addition to TALON, they should be removed before engine start.

e. Primary tiedowns may be used in conjunction with TALON while the rotors are turning for purposes of tiedown crew training or proficiency.

NOTE

TALON should not be engaged for more than 1 hour. To release the TALON, primary tiedowns shall be installed with enough slack to allow the struts to decompress, and the TALON system disengaged. Primary tiedowns are to be tightened by hand, and secondary tiedowns shall be installed as appropriate.

NOTE

Cutters moored pier side or icebreakers hove to in the ice may omit the use of tiedowns and tiedown crews with the concurrence of the CO and the Senior Aviator. The flight deck shall be completely free of ice and snow to operate or traverse helicopter without tiedowns.

6. Primary Tiedown Assemblies. There are two primary tiedown assemblies: the high tiedown assembly and the low tiedown assembly. Both have a rated strength of 10,000 lbs.

a. The high tiedown assembly consists of:

(1) A quick releasing “pelican” hook with a strap tensioner.

(2) Long nylon strap.

(3) Ratchet assembly.

(4) An open hook (WMSL 418, WHEC 378, WAGB 420, and WMEC 270/282) or a bulb hook (WAGB 399 and WMEC 210).

NOTE

The ratchet assembly consists of a ratchet attached to a short nylon strap with a D-ring on the other end. The hook is attached to the D-ring using a 7/16-inch shackle. The long nylon strap is threaded through both the pelican hook and the bale on the ratchet.

NOTE

Release handle on the high tiedown has two stop pins, one located on each side of the handle. These pins are designed to hold the handle in place and prevent inadvertent release. If the pins break off, replacement shall be with a 1/8-inch roll pin.

b. The low tiedown assembly consists of:

(1) An open hook connected to a ratchet assembly.

(2) Long nylon strap.

(3) An open hook (WMSL 418, WHEC 378, WAGB 420, and WMEC 270/282) or a bulb hook (WAGB 399 and WMEC 210).

NOTE

The hook is connected to a D-ring permanently attached to one end of the nylon strap using a 7/16-inch shackle. The free end of the strap is threaded through the bale on the ratchet.

c. TALON. The TALON is an electrically actuated, hydraulically operated unit designed to secure the helicopter to the cutter by engaging with the TALON grid. When actuated, the probe extends from the underside of the helicopter, centers in one of the holes in the TALON grid, locks onto the grid, and provides a downward tensioning force of approximately 3,500 lb.

NOTE

TALON is the primary means of securing TALON equipped helicopters aboard TALON equipped cutters and shall be used in lieu of the primary tiedowns when the TALON probe is installed and operational.

d. Chocks and Chains. The initial tiedown aboard U.S. Navy ships and on Coast Guard cutters operating with U.S. Navy helicopters, is completed using NWC-2, NWC-3, or NWC-4 chocks, and TD-1A or TD-1B tiedown chains.

7. Secondary Tiedowns.

a. Secondary Tiedown Use. Secondary tiedowns are installed after the helicopter is shut down and removed prior to engine startup. For the H-65, low primary tiedowns must be removed to install secondary tiedowns.

b. Secondary Tiedown Assemblies. The TD-1A or TD-1B tiedown assemblies are used as secondary tiedowns on both U.S. Navy ships and Coast Guard cutters. The assembly consists of two pieces:

(1) An adjustable turnbuckle assembly with an open hook on one end.

(2) An 8 to 14 foot long chain with an open or bulb hook on one end.

(a) The chain is permanently attached to the turnbuckle using an S-hook between the large link on the free end of the chain.

(b) A closed link attaches the hook to the turnbuckle on the turnbuckle assembly.

(3) When properly configured, the assembly has a safe working (SWL) load of 10,000 lb.

c. Heavy Weather Tiedowns. Heavy weather tiedowns shall be installed if ship motion will exceed daytime launch and recovery limits. They consist of the installation of additional secondary tiedowns, and, in the case of the H-65, heavy weather tail tiedowns.

d. H-65 Heavy Weather Tiedowns. As part of the heavy weather tiedowns on the H-65, a tail tiedown is installed by the aircrew. The purpose of the tiedown is to stabilize the tail boom while allowing it to move with the

fuselage. Two standard aircraft cargo strap assemblies (SWL of 5,000 lb) are used. Each assembly consists of a ratchet with a built-in hook and a nylon strap with a snap hook permanently attached to one end. The free end of the strap is threaded through the bale on the ratchet. See Figure 11-7.

CAUTION

DO NOT INSTALL SECONDARY TIEDOWN CHAINS ON THE TAIL TIEDOWN RING ON THE H-65. THE TAIL SHALL BE ALLOWED TO MOVE WITH THE FUSELAGE, OR DAMAGE MAY RESULT.

e. Bulb Hooks. Bulb hooks are used to provide a securing point for a cloverleaf or keyhole fitting. Each bulb hook is fitted with a 5/8-inch shackle that is used as the connecting point. Tiedown fittings are either hooked to the shackle with the hook facing down, or attached to the shackle with another shackle.

E. PRIMARY TIEDOWNS.

1. H-65 and H-60 Primary Tiedown Procedures. The procedures in this section apply to Coast Guard helicopters. See Figure 11-1 thru Figure 11-7.

WARNING

EVEN UNDER NORMAL CONDITIONS, THE ROTORS ON THE H-65 AND H-60 CAN DIP TO AS LOW AS 5 FEET ABOVE THE FLIGHT DECK. THEREFORE, ALL PERSONNEL SHALL ENTER AND EXIT THE ROTOR ARC AS CLOSE TO A 45 DEGREE ANGLE TO THE CENTER LINE OF THE HELICOPTER AND REMAIN IN THE VIEW OF THE PILOTS AS MUCH AS POSSIBLE.

CAUTION

THE HIGH TIEDOWN ASSEMBLY CAN DAMAGE THE HELICOPTER SKIN IF INADVERTENTLY DROPPED AGAINST THE FUSELAGE. HIGH TIEDOWN PERSONNEL SHALL MAINTAIN POSITIVE CONTROL AND BALANCE OF THE PELICAN HOOK PART OF THE TIEDOWN WHILE ATTACHING AND RELEASING.

NOTE

During TALON operations, the tiedown crew should not be present on the flight deck unless tiedown training or qualifications are planned. The tiedown crew should be staged inside the cutter and be in constant communications with the HCO.

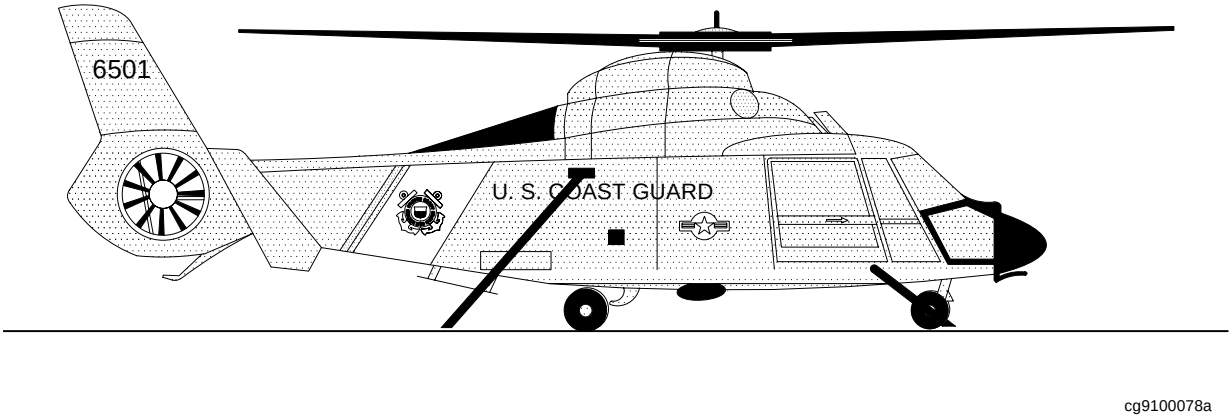

Figure 11-1. H-65 Primary Tiedowns

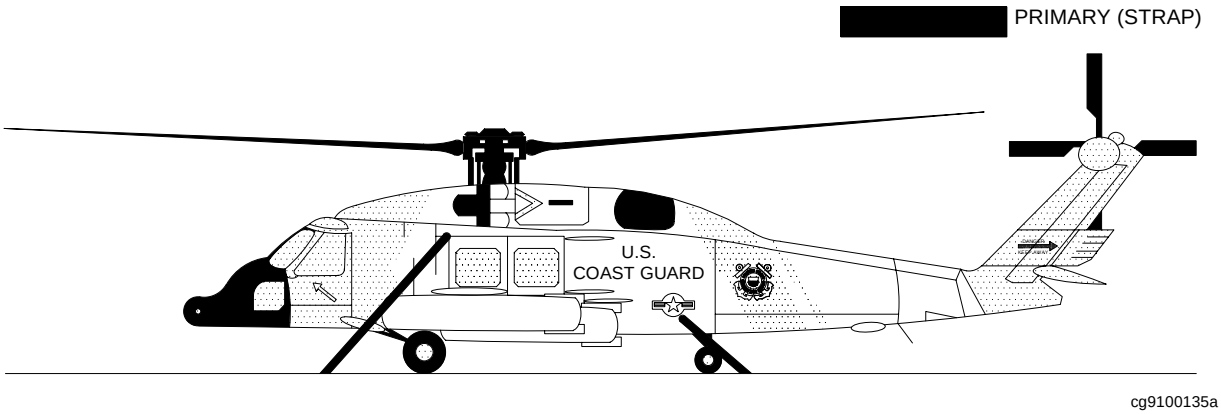

Figure 11-2. H-60 Primary Tiedowns

2. Tiedown General Procedures.

   a. Upon landing, high tiedowns and low tiedowns are installed simultaneously to secure the helicopter to the deck as rapidly as possible. Tiedowns are attached to the deck fitting first and then to the helicopter.

   b. For takeoff, low tiedowns are removed before high tiedowns. Tiedowns are removed from the aircraft first, then from the flight deck fitting.

   c. Tiedowns should be installed at a 45-degree angle from the deck fitting to the aircraft. Forward tiedowns shall lead forward and aft tiedowns shall lead aft.

d. High Tiedown Overhaul. The following steps are used to overhaul the high tiedowns:

(1) Reset the pelican hook. Ensure that it is latched properly.

(2) Completely unwind the strap from the bale of the ratchet, adjust the strap so that approximately 1 1/2 feet of it is through the bale, and crank the ratchet until the strap is wound at least one full turn around the bale. This prevents strap slippage through the bale during installation and ensures that there is sufficient room left on the bale to take up any slack.

(3) Release the tensioner on the pelican hook and pull enough strap through the pelican hook so that the tiedown assembly can reach the helicopter tiedown point with the helicopter positioned anywhere in the landing circle.

(4) Fake out the strap in approximately 4-foot lengths, and gather it up along with the pelican hook, holding them in one hand, with the hook of the deck end in the other. Carry the tiedown assembly in this manner during all landings.

e. Low Tiedown Overhaul. The following steps are used to overhaul the low tiedowns:

(1) Completely unwind the strap from the bale of the ratchet.

(2) Pull enough strap through the bale so that the tiedown assembly can reach the helicopter tiedown point with the helicopter positioned anywhere in the landing circle.

(3) Close the ratchet handle, making sure the strap can be pulled freely through the bale.

(4) Fake out the strap in approximately 4-foot lengths, and gather it up along with the ratchet, holding them in one hand, with the hook of the deck end in the other. Carry the tiedown assembly in this manner during all landings.

3. H-65 High Tiedown Procedures. The high tiedown assemblies attach to the high tiedown mooring rings on the helicopter (see Figure 11-1). The tensioner on the pelican hook is open when it is installed so the slack in the strap may be pulled out quickly and easily.

4. H-65 High Tiedown Installation. Upon receiving the INSTALL TIEDOWNS signal from the LSO:

a. The high tiedown crewmembers proceed, in a crouch (approaching at a 45-degree angle to the helicopter in the pilots view), to the appropriate deck fitting (outboard and aft of the helicopter high mooring ring).

b. Install the deck end of the primary tiedown.

c. Attach the high tiedowns.

d. Pull the slack out of the straps at the pelican hook while maintaining positive control of the hook.

e. Close the tensioner.

f. Secure the excess strap with half hitches.

g. Move to the deck end of the strap and ratchet out any slack that might have developed.

h. Proceed forward to a position behind the low tiedown crewmembers outboard of the cockpit (pilot) doors.

i. When signaled by the LSO, all the tiedown crewmembers return to their position by departing at a 45-degree angle to the helicopter to their position on either side of the hangar or superstructure.

5. H-65 High Tiedown Removal. Upon receiving the first REMOVE TIEDOWNS signal from the LSO:

a. The high tiedown crewmembers proceed, in a crouch (approaching 45-degrees to the helicopter position and in the pilots view), to a position aft of the high tiedowns.

b. Support the pelican hook with their inboard hand.

c. Place their outboard hand on the quick-release handle and watch the LSO.

d. Upon observing both low tiedowns removed, the LSO gives a second REMOVE TIEDOWNS signal, and the high tiedown crewmembers release their pelican hook assemblies.

e. Gather up the strap.

f. Pick up the deck end of the tiedown.

g. Move forward to a position behind the low tiedown crewmember outboard of the cockpit (pilot) doors.

h. When signaled by the LSO, all the tiedown crewmembers return to their position by departing at a 45-degree angle to the helicopter to their position on either side of the hangar or superstructure.

6. H-65 Low Tiedown Procedures. The low tiedown assemblies attach to the forward low tiedown mooring rings on the helicopter (see Figure 11-1).

7. H-65 Low Tiedown Installation. Upon receiving the INSTALL TIEDOWNS signal from the LSO:

a. The low tiedown crewmembers proceed, in a crouch (approaching at a 45-degree angle to the helicopter and in the pilots view), to the appropriate deck fitting (outboard and forward of the helicopter low mooring ring).

b. Install the deck end of the primary tiedown.

c. Attach the low tiedowns to the helicopter.

d. Pull the excess slack in the straps through the bales in the ratchets, leaving enough slack in the strap to get at least one full turn around the bale (this will prevent the strap from slipping).

e. Ratchet the straps tight.

f. Secure the excess strap with half hitches.

g. The tiedown crewmembers crouch just outboard of the cockpit (pilot) doors, watching the LSO.

h. When signaled by the LSO, all the tiedown crewmembers return to their position by departing the helicopter at a 45-degree angle to their position on either side of the hangar or superstructure.

8. H-65 Low Tiedown Removal. Upon receiving the first REMOVE TIEDOWNS signal from the LSO:

a. The low tiedown crewmembers proceed, in a crouch (approaching at a 45-degree angle to the helicopter and in the view of the pilots), to the helicopter.

b. Disconnect the low tiedowns from the aircraft.

c. The LSO, observing both low tiedowns removed, gives a second REMOVE TIEDOWNS signal.

d. The low tiedown crewmembers gather up the straps.

e. Pick up the deck ends of the tiedowns.

f. When signaled by the LSO, all the tiedown crewmembers return to their position by departing the helicopter at a 45-degree angle to their position on either side of the hangar or superstructure.

9. H-60 High Tiedown Procedures. The high tiedown assemblies attach to the high tiedown mooring rings on the helicopter (see Figure 11-2). The tensioner on the pelican hook is open when it is installed so the slack in the strap may be pulled out quickly and easily.

10. H-60 High Tiedown Installation. Upon receiving the INSTALL TIEDOWNS signal from the LSO:

a. The high tiedown crewmembers proceed, in a crouch (approaching at a 45-degree angle to the helicopter and in the view of the pilots), to the appropriate deck fitting (outboard and forward of the helicopter high mooring ring).

b. Install the deck end of the primary tiedown.

c. Attach the high tiedowns.

d. Pull the slack out of the straps at the pelican hook.

e. Close the tensioner.

f. Secure the excess strap with half hitches.

g. Move to the deck end of the strap and ratchet out any slack that might have developed.

h. Then await the arrival of the low tiedown crewmembers.

i. When signaled by the LSO, all the tiedown crewmembers return to their position departing at a 45-degree angle to the helicopter to their positions on either side of the hangar or superstructure.

11. H-60 High Tiedown Removal. Upon receiving the first REMOVE TIEDOWNS signal from the LSO:

a. The high tiedown crewmembers proceed, in a crouch (approaching at a 45-degree angle to the helicopter and in the view of the pilots), to a position aft of the high tiedowns.

b. Support the pelican hook with their inboard hand, place their outboard hand on the quick-release handle, and watch the LSO.

c. Upon observing both low tiedowns removed, the LSO gives a second REMOVE TIEDOWNS signal.

d. The high tiedown crewmembers release their pelican hook assemblies.

e. Gather up the strap.

f. Pick up the deck end of the tiedown, and await the arrival of the low tiedown crewmembers.

g. When signaled by the LSO, all the tiedown crewmembers return to their position departing at a 45-degree angle to the helicopter to their positions on either side of the hangar or superstructure.

12. H-60 Low Tiedown Procedures. The low tiedown assemblies attach to the aft low tiedown mooring rings on the helicopter (see Figure 11-2).

13. H-60 Low Tiedown Installation. Upon receiving the INSTALL TIEDOWNS signal from the LSO:

a. The low tiedown crewmembers proceed, in a crouch (approaching at a 45-degree angle to the helicopter and in the view of the pilots), to the appropriate deck fitting (outboard and aft of the helicopter low mooring ring).

b. Install the deck end of the primary tiedown.

c. Attach the low tiedowns to the helicopter.

d. Pull the excess slack in the straps through the bales in the ratchets, leaving enough slack in the strap to get at least one full turn around the bale (this will prevent the strap from slipping).

e. Ratchet the straps tight.

f. Secure the excess strap with half hitches.

g. Proceed forward to a position outboard of the cockpit (pilot) doors.

h. When signaled by the LSO, the tiedown crewmembers return to their position by departing at a 45-degree angle to the helicopter to their positions on either side of the hangar or superstructure.

14. H-60 Low Tiedown Removal. Upon receiving the first REMOVE TIEDOWNS signal from the LSO:

a. The low tiedown crewmembers proceed, in a crouch (approaching at a 45-degree angle to the helicopter and in the view of the pilots), to the helicopter, and disconnect the low tiedowns.

b. The LSO, observing both low tiedowns removed, gives a second REMOVE TIEDOWNS signal.

c. The low tiedown crewmembers gather up the straps.

d. Pick up the deck ends of the tiedowns.

e. Move forward to a position behind the high tiedown crewmembers (outboard of the cockpit (pilot) doors), watching the LSO.

f. When signaled by the LSO, all of the tiedown crewmembers return to their position by departing at a 45-degree angle to the helicopter to their positions on either side of the hangar or superstructure.

15. Primary Tiedown Malfunctions. The H-65 is considered tied down when one tiedown (either a low or a high one) is installed on each side. The H-60 must have both high tiedowns installed. A hazardous situation will result if a malfunction of one of these critical tiedowns prevents installation, and only one side of the helicopter is effectively tied down. If this occurs, the LSO may have to immediately signal for the removal of all tiedowns (situation dependent). After all tiedowns have been removed, the pilot requests and shall be cleared for immediate takeoff by the LSO.

a. Malfunction During Installation. If the tiedown has mechanically failed and cannot be attached, the tiedown crew member should display the tiedown to the LSO, and take it back when signaled to return to the ready position by the LSO.

b. Malfunction During Removal. If a tiedown malfunctions during removal, the tiedown crew member should attempt to disconnect it as follows:

(1) High Tiedown: Loosen the strap by releasing the tensioner on the pelican hook, or by releasing the ratchet at the deck end of the tiedown assembly. If directed by the LSO, cut the strap as close as possible to the pelican hook. Lift the hook out of the helicopter mooring ring.

(2) Low Tiedown: If the ratchet cannot be released, at the direction of the LSO, cut the strap between the ratchet assembly and the helicopter.

c. Replacing a Malfunctioning Tiedown. A malfunctioning tiedown shall be replaced before the next takeoff or landing evolution. A spare tiedown shall be made up and available.

16. TALON. The TALON is a pilot activated system that replaces the primary tiedowns. (See Chapter 6 for TALON procedures.)

NOTE

Before launch using TALON, primary tiedowns, if installed, should be removed after successful engagement of TALON probe.

a. Tiedown Crew Availability.

(1) Tiedown crewmember shall be immediately available in case of a mechanical failure with the TALON system. The designated personnel shall dress out in all required flight deck PPE.

(2) The designated personnel shall stage in an area that is readily accessible to the flight deck and remain on station throughout flight quarters. The Helicopter Operations Bill shall specify where these personnel are to stage and the means by which the HCO can call them to flight deck if needed.

NOTE

During TALON operations, the tiedown crew should not be present on the flight deck unless tiedown training or qualifications are planned.

b. TALON Probe Failure to Engage. If the TALON probe fails to engage due to equipment malfunction, the pilot may request immediate takeoff. The HCO shall notify the tiedown crew who shall then proceed to their stations. The helicopter shall be recovered using primary tiedown procedures.

NOTE

The pilot may opt to remain on deck to await the tiedown team.

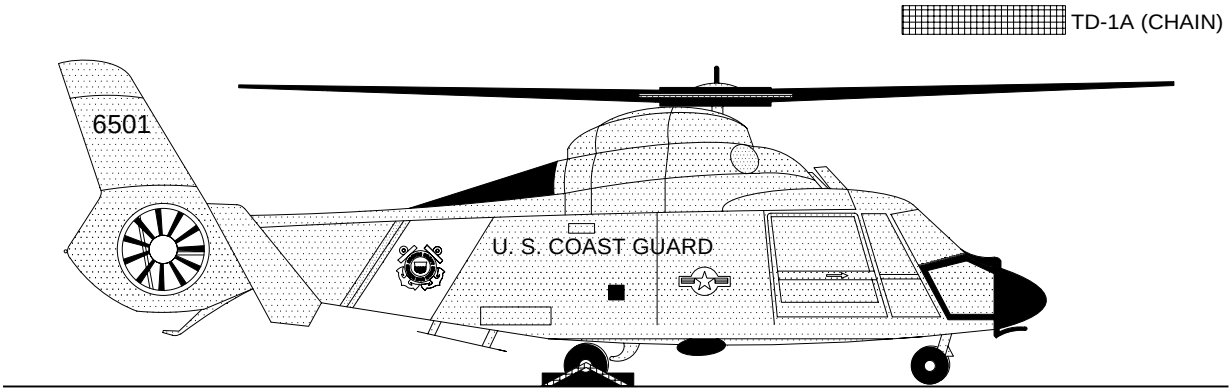

cg9100136a

Figure 11-3. H-65 Chocks and Chains

Figure 11-4. H-60 Chocks and Chains

17. Chocks and Chains.

    a. Primary tiedowns for U.S. Navy helicopters operating aboard Coast Guard cutters, and for Coast Guard helicopters operating aboard U.S. Navy ships, consist of wheel chocks, and tiedown chains.

    b. Tiedowns are installed as depicted in NAVAIR 00-80T-122, and this chapter, Figure 11-3 (H-65) and Figure 11-4 (H-60).

    c. When installing chocks and chains, the chocks are installed first. The chains are then attached to the mooring rings on the landing gear, and tightened. When removing chocks and chains, the chains are removed first.

WARNING

TIEDOWN CHAINS SHALL NOT BE ATTACHED TO ANY MOORING RINGS OTHER THAN THOSE ON THE LANDING GEAR. CHAINS ATTACHED TO THE FUSELAGE WITH THE ROTOR TURNING CAN CAUSE GROUND RESONANCE.

NOTE

If conditions dictate, pilots may elect to leave chocks in place during takeoff.

F. SECONDARY TIEDOWNS.

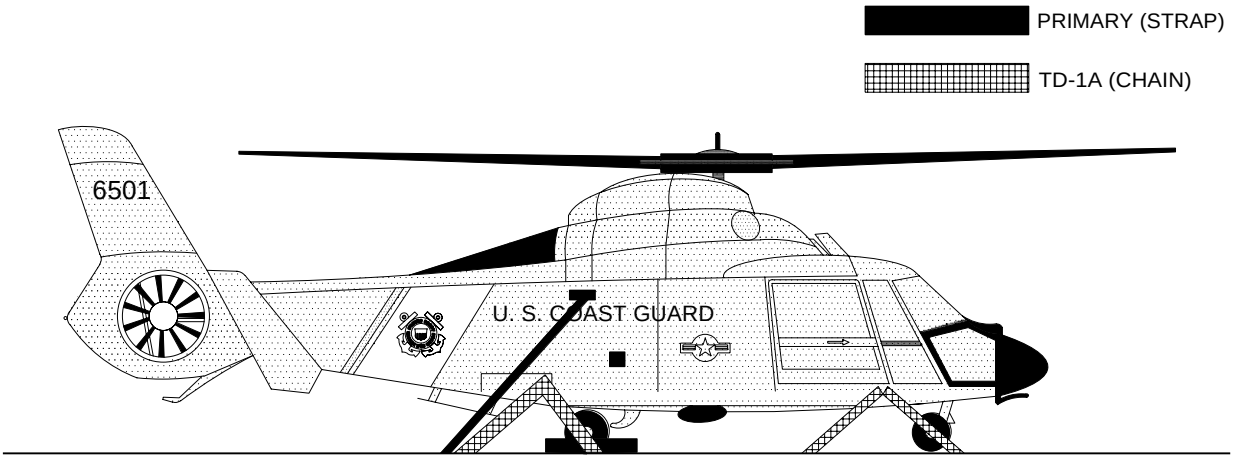

cg9100079a

Figure 11-5. H-65 Secondary Tiedowns

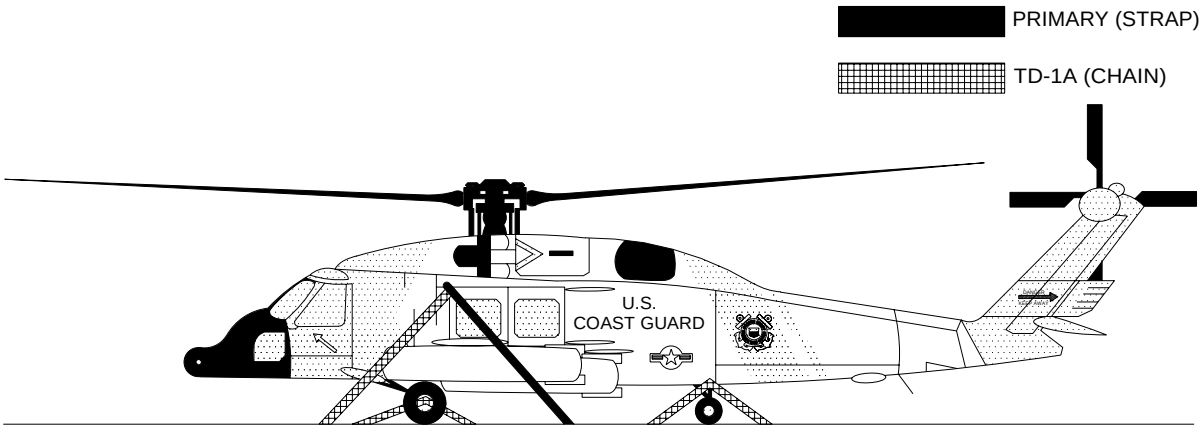

cg9100081a

Figure 11-6. H-60 Secondary Tiedowns

1. Secondary Tiedown Use. Secondary tiedowns provide additional security for extended time on deck and are attached after the rotor and engines have been shutdown, and shall be removed before the pilots get into the aircraft.

2. Secondary Tiedown Installation.

   a. The installation of secondary tiedowns on U.S. Navy helicopters shall be IAW NAVAIR 00-80T-122.

   b. The installation of secondary tiedowns on Coast Guard H-65 helicopters shall be IAW Figure 11-5.

   c. The installation of secondary tiedowns on Coast Guard H-60 helicopters shall be IAW Figure 11-6. This tiedown scheme provides the most possible number of tiedowns for the H-60 and shall not be construed as meeting the requirements for securing the H-60 for heavy weather.

WARNING

WITH THE EXTENDED PYLON AND LEFT OUTBOARD EXTERNAL TANK INSTALLED ON THE H-60, TIEDOWN PERSONNEL ARE REQUIRED TO STEP BETWEEN THE LEFT MAIN WHEEL AND THE EXTERNAL TANK TO INSTALL SECONDARY TIEDOWNS. CAUTION SHALL BE EXERCISED WHEN DOING SO, AS SOME COMBINATIONS OF SHIP MOTION MAY CAUSE THE LEFT MAIN WHEEL STRUT TO COMPRESS SUFFICIENTLY TO ALLOW LEFT EXTERNAL TANK CONTACT WITH THE DECK AND/OR POSSIBLY CAUSE INJURY TO TIEDOWN PERSONNEL.

CAUTION

TO PRECLUDE AIRFRAME DAMAGE FROM UNEVEN BENDING MOMENTS APPLIED TO THE FLEXIBLE COMPOSITE CONSTRUCTION OF THE H-65, VARIATIONS TO THE SECONDARY TIEDOWN ATTACHMENT PATTERN ARE NOT AUTHORIZED.

3. Secondary Tiedown Procedures.

   a. The turnbuckles are attached to the helicopter mooring rings with the release mechanisms on top and the hooks pointing down.

   b. Chains are led both fore and aft at approximately a 45-degree angle, and are connected to the deck tiedown points (bar-type fittings) or the bulb hooks (cloverleaf fittings), with the hooks facing down.

   c. Before attaching secondary tiedowns, the turnbuckle is extended to the full length.

   d. The chain is connected to the turnbuckle so the bitter end of the chain comes out the top. This ensures a direct load transfer from the turnbuckle to the chain.

   e. For the H-65, the forward low primary tiedowns shall be replaced with secondary tiedowns.

   f. For the H-65, the aft high primary tiedown shall be left attached when secondary tiedowns are installed.

g. For the H-60, the aft low primary tiedown shall be replaced with secondary tiedowns.

h. For the H-60, a secondary tiedown shall be attached to the forward high tiedown ring, then forward primary shall be lead aft, and ensuring no part of the pelican hook or strap contacts any part of the aircraft.

G. HEAVY WEATHER TIEDOWNS.

1. Heavy Weather Tiedown Use. If heavy weather (Table 11-1) or extended periods of inactivity are anticipated, additional tiedowns are installed, rotor blades are folded or removed, and (depending on the model of helicopter) strut collars are installed.

WARNING

THE H-60 CANNOT BE TRAVERSED, HANGARED, OR SECURED FOR HEAVY WEATHER. COMMANDING OFFICERS SHALL RELOCATE THE H-60 ASHORE OR DEVIATE AROUND SIGNIFICANT WEATHER SYSTEMS. DAMAGE OR LOSS OF THE AIRCRAFT IS LIKELY IN SEAS ABOVE SEA STATE 3.

2. Heavy Weather Tiedown Installation.

   a. The installation of heavy weather tiedowns on Navy helicopters shall be IAW NAVAIR 00-80T-122.

   b. The installation of heavy weather tiedowns on Coast Guard H-65 helicopters shall be IAW Figure 11-7.

   c. The Navy uses Recovery Assist Secure and Traverse (RAST) system to land, secure and traverse the H-60. Coast Guard Cutters do not have this system installed.

   d. Secondary tiedowns applied IAW Figure 11-6 are sufficient up to Sea State 3 for H-60s.

   e. Blade folding or removal and installation of strut collars shall be IAW the appropriate helicopter maintenance manual.

3. Heavy Weather Tiedown Procedures.

   a. General. Additional tiedown chains are installed using the procedures described in Paragraph 11.F.

   b. H-65 Heavy Weather Tiedown Procedures.

      (1) The heavy weather tail tiedown ratchets are attached to the mooring ring under the tail boom of the helicopter, and the hooks on the straps are attached to the deck (bar-type sockets), or to the bulb hooks (cloverleaf fittings) with the hooks facing down.

      (2) The straps are led outward and slightly aft to clear the lateral fins, at approximately a 45-degree angle from the vertical.

      (3) All slack is removed from the straps, but they are NOT TENSIONED.

CAUTION
DO NOT INSTALL SECONDARY TIEDOWN CHAINS ON THE TAIL TIEDOWN RING ON THE H-65. THE TAIL SHALL BE ALLOWED TO MOVE WITH THE FUSELAGE, OR DAMAGE MAY RESULT.

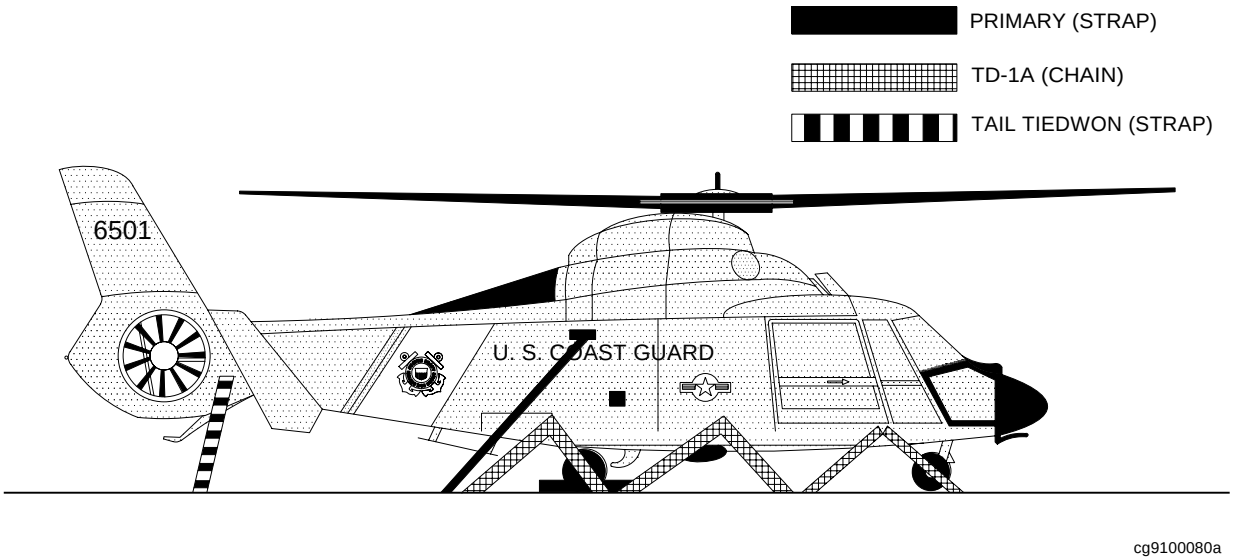

Figure 11-7. H-65 Heavy Weather Tiedowns

H. BLADE SECURITY.

1. Overview. The combination of wind and cutter motion induces main rotor blade movement, creating vibration feedback throughout the rotor and flight control systems. Shipboard deployment experience has shown that this can significantly increase the failure rate of rotor and flight control components.

2. Blade Tip Covers (Socks). Anytime an H-65 helicopter is expected to remain on deck for longer than 30 minutes with relative winds greater than 10 knots, or anytime the winds are expected to exceed 20 knots, blade socks should be installed. Refer to the appropriate helicopter maintenance manual for proper installation procedures.

3. Blade Restrainers. The main rotor blades shall be secured with the main rotor blade restrainer set anytime a H-60 helicopter is to remain on deck for an extended period of time, or when actual or forecast winds exceed 45 knots. Blade clamps shall be installed and secured using tiedown cables.

4. Blade Folding. Blade folding provides increased protection against damage from wind or deck motion. On cutters with hangars, blade folding is required to hangar the helicopter (except WAGB 399 cutters, where one helicopter is deployed). Blade folding should be performed as a normal routine at the

completion of the day's flight operations. The MPC for each helicopter type describes the appropriate procedure.

WARNING

RELATIVE WIND AND CUTTER MOTION SHALL BE MINIMIZED TO REDUCE THE HAZARDS INHERENT IN BLADE FOLDING AND UNFOLDING. BLADE FOLDING AND UNFOLDING IN EXCESS OF ESTABLISHED LIMITS SHALL NOT BE ATTEMPTED.

a. Blade Folding and Unfolding Procedures. Refer to the appropriate helicopter flight handbook and maintenance manual for both manual and automatic blade folding and unfolding procedures.

b. Blade Folding Limitations. The MPC of each helicopter type establishes the limitations to conduct this evolution. The following limitations are established in the absence of any MPC limitations:

(1) Wind is less than 45 knots.

(2) Pitch is less than 3 degrees and roll is less than 10 degrees.

(3) Blade folding shall not be conducted if any one of these parameters is exceeded. During all blade folding operations, a minimum of four personnel are required. Consideration should be given to increasing personnel involved as the upper limits are approached.

WARNING

WHEN WORKING NEAR THE ROTOR HEAD, THE USE OF THE CRANIAL ASSEMBLY IS HIGHLY RECOMMENDED. A PITCHING OR ROLLING DECK, WET OR ICY SURFACES, AND LOW ILLUMINATION LEVELS ALL INCREASE THE CHANCE OF SLIPS OR FALLS. FALLING FROM THE HEIGHT OF ROTOR HEAD COULD RESULT IN SERIOUS INJURY OR DEATH.

c. Blade Removal. On ships not equipped with hangars, blade removal provides the best protection against damage from wind and deck motion, and may be an acceptable alternative to blade folding.

WARNING

TO REDUCE THE HAZARDS INHERENT IN BLADE REMOVAL AND REINSTALLATION, RELATIVE WIND AND CUTTER MOTION SHALL BE MINIMIZED. BLADE REMOVAL AND REINSTALLATION IN EXCESS OF ESTABLISHED LIMITS SHALL NOT BE ATTEMPTED.

(1) Blade Removal and Reinstallation Procedures. Refer to the appropriate helicopter flight handbook and maintenance manual for blade removal and reinstallation procedures.

(2) Blade Removal Limitations. These procedures are used when relative wind is less than 45 knots, pitch is less than 3 degrees, and

roll is less than 10 degrees. Blade removal shall not be conducted if any one of these parameters is exceeded. During all blade removal operations, a minimum of four personnel are required. As the upper limits are approached, serious consideration should be given to increasing personnel involved.

I. TRAVERSING.

1. Hangar Equipped Cutters.

   a. Hangaring the helicopter significantly reduces corrosion and provides a safer working environment for maintenance. The helicopter shall be hangared routinely at the end of each day's operations (unless LANTAREA or PACAREA directives provide an exception based on operational necessity on a case-by-case basis). Commandant (CG-41) and Commandant (CG-711) shall be copied on correspondence granting an exception to this requirement.

   b. The helicopter is normally traversed from the flight deck into the hangar by the AVDET with assistance from cutter personnel. Traversing is a relatively simple and safe operation when conducted by trained personnel using the proper equipment. However, if care is not exercised during the operation, personnel can be injured and the helicopter damaged.

2. Non-Hangar Equipped Cutters. The necessity for moving a helicopter on the deck of a non-hangar equipped cutter is rare, and the movements involved are small in comparison to those required on hangar-equipped cutters. Traversing should only be performed when deemed necessary by the Senior Aviator and CO. All other procedures shall be the same as on hangar-equipped cutters.

3. Helicopter Manual Traversing. Manual traversing occurs when the helicopter is moved using either a motorized tow bar or a hand-guided steering bar with personnel pushing the helicopter.

   a. Traversing Crew Organization. The following personnel are required to manually traverse a helicopter (Table 11-2).

Table 11-2. TRAVERSING CREW ORGANIZATION

Number of People	Deck Handling Crew Position
1	Flight Deck Director (FDD)
1	Driver
1	Brake Rider
4	Push crew member
2 (4)	Tiedown crew member (Heavy Weather Traversing)

NOTE

Traversing crew personnel shall only fulfill one traversing crew position per evolution (i.e., 9 personnel are required for normal traversing and 11 personnel are required for heavy weather traversing).

(1) Flight Deck Director (FDD).

(a) The FDD is responsible for safely traversing the helicopter, and is in charge on the flight deck during the operation. The FDD supervises all preparations, and directs the movement and the security of the helicopter.

(b) The FDD shall be one of the pilots or the senior enlisted member of the AVDET. When a helicopter must be moved in an emergency situation and the authorized FDDs from the AVDET are not aboard and cannot be reached, the LSO, if designated by the CO, may perform this duty as long as any member of the AVDET is present.

(2) Brake Rider (BR). The brake rider (BR) sits in the pilot seat with seat belt and shoulder harness fastened. The BR operates the main wheel brakes and the nose/tail wheel locking pin during the operation. The BR shall respond instantly to all stop signals, and shall be constantly alert to the signals of the FDD. The BR shall wear an inflatable life jacket and a cranial or helmet whenever the helicopter is moved. The BR should be a member of the AVDET.

(3) Tiedown Crew. The tiedown crew tends the tiedowns during the operation, and responds to the commands of the FDD.

(4) Push Crew. The push crew provides the power required to move the helicopter. The size of the crew depends upon the weight of the helicopter. For the H-65, a minimum of four pushers are required; one at each of the pilot and copilot forward door frames, and one at each of the main cabin forward door frames.

WARNING

DUE TO THE FLEXIBLE COMPOSITE CONSTRUCTION OF THE H-65, ONLY THESE POSITIONS MAY BE USED TO PUSH THE HELICOPTER.

(5) Driver. The driver operates the helicopter steering bar or motorized tow bar to position the helicopter. The driver should be a member of the AVDET.

b. Traversing Preparation. In preparation to traverse the helicopter, the cutter is maneuvered to provide minimum flight deck motion. All involved personnel are equipped with whistles. The FDD:

(1) Inspects the hangar and traversing areas to ensure all trip hazards and potential obstructions are removed.

(2) Hangar is fully retracted.

(3) Hangar door completely open.

(4) Portable ramps (if required) are in place.

(5) The helicopter's rotor blades have been folded or removed (as required).

(6) The brake rider straps into the pilot's seat.

(7) The FDVS is energized.

WARNING

ENERGIZING OR DE-ENERGIZING FIN STABILIZERS OR MAKING LARGE INPUTS TO THE HELM CAN CAUSE UNEXPECTED AND EXCESSIVE FLIGHT DECK MOTION. THE FDD SHALL BE NOTIFIED OF ANY REQUIREMENT TO ENERGIZE OR DE-ENERGIZE FINS OR MANEUVER THE CUTTER, AND THE HELICOPTER SHALL BE IMMEDIATELY SECURED WITH SECONDARY TIEDOWNS.

c. Traversing Communications.

(1) Communications are by voice and whistle commands.

(2) The FDD shall obtain permission from the bridge before moving the helicopter.

(3) Anyone recognizing a dangerous situation gives the STOP signal (one long blast on the whistle) and the helicopter is immediately stopped, the parking brake set, and the tiedowns secured. The START signal (two short blasts on the whistle) and all other commands are given only by the FDD.

d. Normal Traversing (Walking Tiedowns). These procedures are used when the relative wind velocity is 45 knots or less, pitch is 4 degrees or less, and roll is 8 degrees or less.

e. Traversing Coast Guard Helicopters.

(1) Secondary and low primary tiedowns are removed.

(2) FDD checks that all personnel are ready.

(3) Two tiedown crewmembers tend the pelican hooks (in place) and the deck ends of the high tiedowns.

(4) All personnel must have whistles in their mouths so that their hands may be free to operate equipment.

(5) FDD orders, "NOSE (TAIL) WHEEL UNLOCKED." The brake rider unlocks the wheel, and the driver checks that the wheel swivels freely.

(6) FDD orders, "PARKING BRAKE OFF." The brake rider applies the toe brakes and releases the parking brake.

(7) FDD orders, "TIEDOWNS OFF."

(8) The pelican hook tensioners are released, slack is pulled into the strap, and the deck ends are disconnected while the pelican hooks are held hooked to the helicopter.

(9) FDD gives the START signal (two short blasts on the whistle).

(10) The brake rider releases the toe brakes, and the push crew (or the driver) starts to move the helicopter into the hangar.

(11) As the helicopter is traversed, the tiedown crewmembers walk alongside, keeping track of the closest deck mooring points.

(12) The driver steers the helicopter into the hangar, keeping it centered over the hangar guideline.

(13) When the helicopter is in position, the FDD gives the STOP signal (one long blast on the whistle).

(14) The brake rider applies the toe brakes and parking brake.

(15) The tiedowns are attached to the deck, the slack is pulled out of the straps, and the tensioners are locked. After additional tiedowns are installed, the nose/tail wheel is locked and the steering bar is removed.

WARNING

WHEN A MOTORIZED TOW BAR OR HAND-HELD STEERING BAR IS NOT AVAILABLE, THE NOSE/TAIL WHEEL SHALL REMAIN LOCKED TO PROVIDE DIRECTIONAL STABILITY. EXCEPT ON WAGBS, THE HELICOPTER SHOULD NEVER BE TURNED ATHWARTSHIPS.

NOTE

Chocks are not normally used when traversing a Coast Guard helicopter.

f. Traversing Navy Helicopters.

(1) All but four TD-1A tiedown assemblies are removed.

(2) FDD checks that all personnel are ready.

(3) Two tiedown crewmembers tend a chock and TD-1A tiedown assembly each, and two other tiedown crewmembers tend an additional TD-1A assembly each.

(4) All personnel must have their whistles in their mouths, so that their hands are free to operate equipment.

(5) FDD orders, “NOSE (TAIL) WHEEL UNLOCKED.” The brake rider unlocks it, and the driver checks that the wheels swivel freely.

(6) FDD orders, “PARKING BRAKE OFF.” The brake rider applies the toe brakes and releases the parking brake.

(7) FDD orders, “TIEDOWNS OFF.” The tiedowns are loosened, then disconnected, and reset.

(8) FDD gives the START signal (two short blasts on the whistle).

(9) The chocks are removed.

(10) The brake rider releases the toe brakes, and the push crew starts to move the helicopter into the hangar.

(11) As the helicopter is traversed, the tiedown crewmembers walk alongside, keeping track of the closest deck mooring points.

(12) The driver steers the helicopter into the hangar, keeping it centered over the hangar guideline.

(13) When the helicopter is in position, the FDD gives the STOP signal (one long blast on the whistle).

(14) The brake rider applies the toe brakes and parking brake, and the chocks are installed.

(15) The tiedowns are attached and tightened between the nearest deck fittings and the helicopter's mooring rings. After additional tiedowns are installed, the nose/tail wheel is locked and the steering bar is removed.

WARNING

WHEN A MOTORIZED TOW BAR OR HAND-HELD STEERING BAR IS NOT AVAILABLE, THE NOSE/TAIL WHEEL SHALL REMAIN LOCKED TO PROVIDE DIRECTIONAL STABILITY. EXCEPT ON WAGBS, THE HELICOPTER SHOULD NEVER BE TURNED ATHWARTSHIPS.

NOTE

Traversing with Navy helicopters or Coast Guard helicopters on Navy ships requires two additional tiedown crewmembers to tend TD-1A's and chocks.

g. Traversing on WAGBs.

(1) When two helicopters are deployed on an icebreaker, the spotting sequence is dependent upon the design of the hangar and the flight deck. Each icebreaker should outline the preferred sequence in its Helicopter Operations Bill. In all cases, flight deck clearance requirements shall be met.

(2) Normal traversing of helicopters is authorized only when the icebreaker is transiting in the open ocean, through sea ice, hove to or breaking first year ice. A risk assessment shall review the totality of the onscene conditions, to include ice coverage, ice thickness, and anticipated conditions in making this decision. The FDD shall obtain permission from the OOD before traversing the helicopter.

WARNING

HELICOPTERS SHALL NOT BE TRAVERSED ON WAGBS WHILE THE CUTTER IS BREAKING MULTI-YEAR SOLID (FAST) ICE OR WHILE BREAKING OR TRANSITING THROUGH ICE AT NIGHT. IF THERE IS ANY DOUBT THAT THE NORMAL TRAVERSING PROCEDURES WILL NOT PROVIDE ADEQUATE SAFETY TO THE HELICOPTER AND CREW, GIVEN THE ONSCENE OR ANTICIPATED CONDITIONS, THEN THE HELICOPTER SHALL BE TRAVERSED WHEN THE ICEBREAKER IS HOVE TO IN THE ICE.

h. Heavy Weather Traversing Procedures (Progressive Chains). These procedures are used when:

(1) The relative wind is greater than 45 knots.

(2) Pitch is greater than 4 degrees.

(3) Roll is greater than 8 degrees.

NOTE

Heavy weather traversing will requires two additional tiedown crewmembers to tend TD-1As. At least four TD-1A tiedown assemblies shall be attached to the helicopter and the deck at all times.

i. Heavy Weather Traversing Procedures.

(1) Primary high tiedowns are removed (Coast Guard helicopters only).

(2) FDD checks that all personnel are ready. Four tiedown crewmembers tend a TD-1A tiedown assembly each.

(3) All personnel must have their whistles in their mouths, so that their hands are free to operate equipment.

(4) FDD orders, “NOSE (TAIL) WHEEL UNLOCKED,” the brake rider unlocks it, and the driver checks that the wheels swivels freely.

(5) FDD orders, “PARKING BRAKE OFF.” The brake rider applies the toe brakes and releases the parking brake.

(6) FDD orders, “AFT LEADING TIEDOWNS OFF.”

(a) The tiedown crew loosens, releases, and overhauls the four tiedowns that tend aft.

(b) The forward tiedowns are loosened slightly and reset, but are left installed.

(c) Enough slack should be induced to allow the aft tiedowns to become taut first, but not so much that safety is compromised.

(7) FDD gives the START signal, two short blasts on the whistle.

(a) The brake rider releases the toe brakes.

(b) The push crew moves the helicopter forward until the tiedowns that were tending forward are tending aft.

(c) The driver steers the helicopter into the hangar, keeping it centered over the hangar guideline.

(8) Before the tiedowns becoming taut, the FDD, or anyone on the flight deck gives the STOP signal, one blast of the whistle, and the brake rider applies the toe brakes and parking brake. The forward tending tiedowns are reinstalled and tightened.

(9) The above steps are repeated until the helicopter is in position in the hangar. After additional tiedowns are installed, the nose/tail wheel is locked and the steering bar is removed.

WARNING

USE OF A MOTORIZED TOW BAR DURING HEAVY WEATHER TRAVERSING IS PROHIBITED. WHEN A HAND HELD STEERING BAR IS NOT AVAILABLE, THE NOSE WHEEL SHALL REMAIN LOCKED TO PROVIDE DIRECTIONAL STABILITY.

CAUTION

WHEN BEING MOVED, ENSURE THAT THE CHAINS ARE IN A POSITION SO AS NOT TO FOUL ANY PART OF THE AIRCRAFT STRUCTURE WHEN TIGHTENED.

4. Automated Helicopter Traversing. Automated helicopter traversing occurs when the helicopter is moved using shipboard installed traversing equipment. Procedures are being developed for ASIST.

J. HELICOPTER SECURITY AND FIRE CHECKS.

1. Overview. The Senior Aviator is responsible for the security of the helicopter. The Senior Aviator shall ensure that security and fire checks are made periodically to confirm the helicopter is riding well, no fuel leaks exist, the flight deck or hangar is clear of unauthorized personnel, and any other potentially hazardous situation does not exist. When conditions dictate, the Senior Aviator shall arrange for a live watch in the hangar.

2. Security on WAGBs . Security and fire checks are normally made by the Aviation Department on an icebreaker. The heavy-weather hangar watch is normally manned by an aviation rate. However, the hangar area shall be included in the normal security checks conducted by the Boatswain's Mate of the Watch (BMOW), and any unusual conditions or occurrences shall immediately be reported to the Senior Aviator.

3. Security on WHECs and WMECs. Because so few aviation personnel are embarked or deployed on WHECs or WMECs, the security and fire checks, as well as the hangar watch (if required) are normally made by the cutter's crew. This does not relieve the Senior Aviator of the responsibility for the safety and security of the helicopter. Any unusual conditions or occurrences shall immediately be reported to the Senior Aviator.

4. Duties of the OOD. The following duties shall be performed by the OOD:
   a. Supervise the security and fire checks.
   b. Keep informed of the current and forecast weather and its effect on helicopter security. Initiate precautions and advise the senior aviator.
   c. Initiate appropriate action to fight fires or alleviate any other dangerous condition that may be reported.
   d. Order the smoking lamp out:
      (1) On all weather decks during flight operations.
      (2) On all weather decks during helicopter fueling operations.
      (3) For helicopter engine washes.
      (4) For helicopter maintenance ground runs.
      (5) Within 50 feet of the helicopter.
5. Duties of the First Lieutenant. The following duties shall be performed by the First Lieutenant:
   a. Instruct the BMOW in:
      (1) Use of fire fighting equipment.
      (2) Methods of turning on a fire alarm.
      (3) The need to check helicopter security frequently.
   b. Keep informed of the forecast weather and take precautions as required in the absence of the Senior Aviator.
   c. Provide personnel and equipment to secure or move the helicopter, or to fold the blades.
6. Duties of the BMOW. The BMOW shall perform security checks of the helicopter and flight deck area during normal rounds, checking the following:
   a. Ensure that the helicopter is properly secured.
   b. Ensure the telescoping hangar section closest to the helicopter tail is chained down if the telescoping hangar braking system is not serviceable or heavy weather is expected. The telescoping hangar section shall be secured using TD-1As to mooring points on the hangar deck.
   c. Enforce the no smoking regulations.
   d. Inspect the helicopter's tiedowns for proper tension and make minor adjustments as required. The BMOW shall not tighten the tail tiedown without the concurrence of a member of the AVDET.
   e. Report any unusual conditions to the OOD immediately.
   f. Report all fuel or oil leaks to the OOD, and break out fire fighting equipment. Clean up the spill.
   g. Immediately report any fires to the OOD, using all possible means to attract attention and obtain help. After ensuring that the word is passed, if possible, confine and combat the fire until released by the damage control party.

CHAPTER 12. SHIPBOARD HELICOPTER MAINTENANCE.

A. INTRODUCTION. Anytime a deployed or embarked helicopter is grounded, a valuable mission asset is lost. Every effort should be made to provide an airframe that will require a minimum of maintenance. Tools, parts, and mechanics should be provided for those times when maintenance is required. The degree of maintenance capability provided will depend upon the length of the deployment and the quality of the aviation facility provided by the cutter.

B. IN THIS CHAPTER. This chapter discusses the following topics:

1. Predeployment Maintenance.
2. Helicopter Support Kit (HSK).
3. WHEC and WMEC Deployments.
4. WAGB Deployments.
5. Deployment Maintenance.

C. PREDEPLOYMENT MAINTENANCE. Predeployment maintenance should include any maintenance that might come due during the deployment that is difficult to perform on a cutter. In addition, measures should be taken to protect the helicopter from corrosion.

D. HELICOPTER SUPPORT KIT.

1. A Helicopter Support Kit (HSK), tailored to the specific maintenance requirements of the model of helicopter deployed and the length of the deployment, shall be provided on the cutter. The unit providing the HSK and the Senior Aviator are responsible for the HSK and must ensure that all required items are available.
2. Hangars shall be used primarily as a secure aircraft work and storage facility while aircraft are embarked. Common traffic and fitness equipment placement shall be coordinated through the Senior Aviator.

E. WMSL, WHEC, AND WMEC DEPLOYMENTS.

1. Deployments are usually not more than 45 days, with one helicopter, two pilots, and two or three aircrew.
2. Maintenance requirements include:
   a. Routine line servicing.
   b. Corrosion control.
   c. Minor repairs.
3. On WMSL and WMEC 270 cutters, facilities are provided for storage, removal, and installation of major components.

F. WAGB DEPLOYMENTS.

1. Deployments aboard icebreakers may last as long as 6 months, with up to 2 helicopters, 4 pilots, and 10 aircrew including 1 Chief Petty Officer.
2. Maintenance requirements include:
   a. Routine line servicing.

b. Corrosion control.

c. Repairs.

d. Component replacement.

3. A more extensive HSK should be carried and consist of:

a. Assemblies.

b. Components.

c. Parts.

d. Supplies.

e. Accessories.

f. Tools.

g. Publications.

4. The AVDET will usually be operating independently of any other ready source of supply and should be self-sufficient.

G. DEPLOYMENT MAINTENANCE.

1. Responsibility. The Senior Aviator is responsible for maintenance of the deployed aircraft. The parent unit will normally provide technical assistance and parts support.

2. Aircraft Flight Record (CG-4377). Before any departure, Part I of the Aircraft Flight Record shall be completed and signed to indicate that preflight and servicing requirements have been accomplished. Part III of the form is a record of discrepancies and maintenance for each helicopter. Completed Part I records shall be retained for a period of 90 days, and Part III records for a period of 12 months. All aircraft flight records should be maintained in the Asset Logistics and Maintenance Information System (ALMIS).

3. Scheduled Maintenance. Coast Guard helicopter maintenance inspections are scheduled at regular calendar intervals, except when flight hours are considered the critical scheduling factor. Hourly and calendar inspection criteria are set forth in the Asset Computerized Maintenance System (ACMS) Maintenance Due List (MDL). ACMS provides a means of forecasting and monitoring the overall maintenance effort for the helicopter.

4. Long Deployment Maintenance. The current Coast Guard Logs and Records company shall provide a 6 month projection of maintenance requirements for each designated helicopter before deployment.

a. The parent air station shall provide the current Coast Guard Logs and Records Company with the helicopter side number, departure date, and cutter address.

b. MDLs and associated MPCs shall be mailed directly to the cutter during deployments, if necessary. The parent Air Station should monitor duplicate MDLs.

5. Short Deployment Maintenance. Parent air stations should receive 90-day maintenance projections.

6. Maintenance Procedure Cards (MPC). In either case, the requirement to return the MPCs to the current Coast Guard Logs and Records company via the parent Air Station remains the same. Conscientious use of the ACMS during deployments is essential to the continuous and effective maintenance management provided by the current Coast Guard Logs and Records company.

7. Maintenance Extensions. Where provisions are made for extending the prescribed maintenance period, cutter COs are authorized to do so based upon the recommendations of the Senior Aviator.

8. Corrosion Prevention. Corrosion is a major concern for the helicopter AVDET. Measures shall be taken to keep the helicopter clean and free of salt.

   a. At the end of each day's operation, an engine wash is required, and should be completed even if there is a shortage of fresh water onboard.

   b. The airframe should be washed, and the helicopter hangared.

   c. In freezing conditions, approved cleaning compounds should be used in lieu of water.

9. Special Inspections. It may be necessary to increase the frequency of required periodic inspections when on a cutter due to the hostile environment.

10. Maintenance Runs.

    a. Maintenance engine or APU runs shall, at a minimum:

       (1) Have permission from the OOD.

       (2) FDVS on and monitored.

       (3) One engine operating at a time.

    b. Maintenance runs with rotor head engagement shall, at a minimum:

       (1) Have permission from the OOD.

       (2) FDVS on and monitored.

       (3) Have LSO on station.

       (4) Have one fire party on station with fire hose laid out or the fire monitor manned.

       (5) Maintain amber deck when rotor below 100% NR.

11. Maintenance Flights. Maintenance flights shall be conducted IAW the Coast Guard Air Operations Manual, COMDTINST M3710.1 (series). While in flight, the helicopter shall be kept in sight by the cutter at all times, and the cutter shall remain at FLICON ONE to facilitate rapid recovery of the helicopter in the event of an emergency. The Coast Guard Air Operations Manual, COMDTINST M3710.1 (series), sets the VMC weather condition for flight verification checks and test flights and is defined in Chapter 5 of this Manual.

12. Helicopter Craning. Craning of helicopters off cutters or other vessels shall be IAW the aircraft's home Air Station directives. The cutter shall be briefed and training held for those crewmembers involved to prevent further damage.

13. Maintenance Weather. The Coast Guard Air Operations Manual, COMDTINST M3710.1 (series), establishes the VMC weather requirement for flight verification checks and test flights. Those requirements are also defined in Chapter 5 of this Manual.

CHAPTER 13. WATER SALVAGE OPERATIONS.

A. INTRODUCTION. The goal of every water salvage operation is to recover the airframe with as little damage as possible. After the helicopter ditches and the crew has been rescued, every effort should be made to recover the airframe before it sinks. If the helicopter remains upright, and the conditions are calm, it may be possible to recover it with little or no damage. If the helicopter becomes inverted, the damage will be far more severe, and the risk of its sinking greatly increased. Despite any damage, the helicopter is a vital source of information for determining the cause of the ditching and its salvage should be aggressively pursued.

B. IN THIS CHAPTER. This chapter discusses the following topics:

1. Salvage Responsibilities.
2. Salvage Personnel.
3. Salvage Safety.
4. Salvage Equipment.
5. Salvage Priorities.
6. Salvage Procedures.
7. Salvage Special Considerations.

C. SALVAGE RESPONSIBILITIES . The cutter CO is responsible for ensuring proper implementation of the salvage operation as the cognizant authority of the aircraft while deployed. In some cases, this may include coordination of the accident investigation and maintaining control until properly relieved. As with any investigation, continuity and proper chain of custody are paramount in such cases. In cases of great distances from CONUS, this support is essential and may require significant logistical support.

D. SALVAGE PERSONNEL.

1. Salvage Officer. A Salvage Officer shall assigned to supervise the recovery of the airframe. The Aviation Engineering Officer from the parent air station is normally assigned as the Salvage Officer. However, until relieved on scene, the Senior Aviator or designee shall act as the Salvage Officer.

2. Divers. Qualified divers are required any time the helicopter is inverted. Only divers are authorized to enter an inverted helicopter. Refer to Coast Guard Diving Policies and Procedures Manual, Volume 1, COMDTINST M3150.1 (series), for specific guidance regarding use.

3. Salvage Support Personnel. The Salvage Officer should what additional personnel are required for the salvage operation.

E. SALVAGE SAFETY.

1. The mishap site presents many hazards, not all of that are associated with the aircraft itself. All hazards that could endanger personnel, the aircraft, its cargo, the environment, the site, the ship and salvage operation must be identified and protective measures taken. Prevention of additional damage to the aircraft and/or cutter is important to the salvage operation. However, it is secondary to the safety of personnel.

2. For additional information or guidance on handling of aircraft hazardous materials, refer to local directives, or:

   a. Aeronautical Engineering Maintenance Management Manual, COMDTINST 13020.1 (series).

   b. Naval Air Training and Operational Procedures Standardization (NATOPS) U.S. Navy Aircraft Fire Fighting and Rescue Manual, NAVAIR 00-80R-14.

   c. General Advanced Composite Repair Manual, Air Force Technical Order (AFTO) 1-1-690.

3. Personnel Safety. Numerous hazards, both obvious and insidious, exist at a crash site. Most obvious are the fire and explosive hazards due to fuel, oils, hydraulics, battery fluids, ammunition, pyrotechnics, and the residuals they leave behind after the fire is extinguished. Not so obvious are the compressed gas cylinders such as fire extinguishing bottles, nitrogen blow down bottles for landing gear activation, landing gear oleo struts, and various accumulators.

WARNING

PERSONNEL SHALL REMAIN UPWIND OF CRASH AND SALVAGE SITES OR WEAR THE APPROPRIATE PROTECTIVE EQUIPMENT UNTIL THE COMPOSITE FIBERS HAVE BEEN CONTAINED. INHALATION OF COMPOSITE FIBERS RESULTING FROM AIRCRAFT FIRES AND/OR AIRCRAFT DAMAGE MAY BE HARMFUL TO PERSONNEL. IN ANY CASE, HANDLING OF BROKEN, SHREDDED, OR MANGLED COMPOSITE MATERIALS SHALL BE MINIMIZED WITH HANDLERS WEARING GLOVES. SEE CHAPTER 14 FOR SPECIFIC PERSONNEL PROTECTIVE EQUIPMENT (PPE) RECOMMENDATIONS.

4. Composite Material Safety. In addition to the hazards above, composite materials release microscopic carbon fibers to the atmosphere when broken, shredded, or mangled. Aircraft and composite aircraft parts shall be contained by the use of polyurethane primer, spray lacquer, liquid floor wax, or light oils to achieve bonding. All facilities and equipment exposed to debris from the aircraft fire shall be vacuumed and/or washed down. Decontamination vacuuming should be conducted using industrial vacuums collected in sealed plastic (garbage) bags and disposed with locally established procedures or provided to the accident board.

F. SALVAGE EQUIPMENT. Special equipment required for the salvage of each model of helicopter is described in the appropriate maintenance manual. This equipment should be locally manufactured and maintained on each WAGB (for the principal model of helicopter) and at air stations with helicopters assigned.

G. SALVAGE PRIORITIES. The following priorities should be applied to any salvage operation:

1. Recover the airframe without further damage.
2. Accept additional damage to the airframe in lieu of its loss.
3. Scavenge as many components as possible off the airframe in the face of its impending loss.
4. Scuttle the helicopter rather than abandon it if circumstances dictate.

H. SALVAGE PROCEDURES.

1. Overview. Specific salvage procedures for each helicopter model are given in their respective maintenance manuals. The manuals should be provided by the Salvage Officer assigned for each incident (AVDET Engineering Officer for WAGB deployments).
2. Preserving Buoyancy. The first step is to keep the helicopter from sinking. If conditions permit, the first vessel on scene should add flotation (flotation collars, inflatable flotation bags, inflatable liferafts, boat fenders, etc.) to the helicopter. Once positive buoyancy is assured, the salvage operation can proceed.
3. Craning. Before attempting to lift the helicopter, the Salvage Officer shall ensure that the capacity of the crane exceeds the weight of the helicopter. A minimum capacity of 50 percent greater than the maximum gross weight of the helicopter is recommended. If possible, the rotor blades should be removed, and the helicopter righted before being picked up. As the helicopter is lifted, water must be allowed to drain out. Otherwise, the capacity of the crane might be exceeded. For specific procedures, refer to the appropriate helicopter maintenance manual or parent air station directive.
4. Towing. It may be advantageous to tow the helicopter, either to a more sheltered area or to a rendezvous with a salvage vessel. Helicopters may be towed either upright or inverted; however, inverted helicopters will require additional flotation. The following procedures are provided as a guide. For specific procedures, refer to the appropriate helicopter maintenance manual.
   a. Helicopter Towing - Upright. Whether the helicopter is towed forward or backward depends on the helicopter model, wind and sea conditions, and the condition of the airframe.
      (1) Check the helicopter for watertight integrity. Add flotation if necessary to preserve buoyancy.
      (2) Rig a sea drogue to the helicopter to provide directional stability during the tow.
      (3) If possible, lower the landing gear to lower the center of gravity of the helicopter.

(4) Remove the rotor blades, if practical.

(5) Rig a towing bridle to the helicopter at the specific points designated for towing, and connect it to the towing hawser.

(6) Tow the helicopter at the slowest possible speed.

(7) To reduce the risk of capsizing, avoid towing the helicopter parallel to the trough of the waves.

(8) Make all turns slow and wide to reduce the risk of capsizing.

(9) If towing at night, rig a light to the helicopter.

(10) Closely monitor the helicopter for changes in buoyancy.

b. Helicopter Towing - Inverted. An inverted helicopter can be towed using the same procedures prescribed for an upright helicopter. However, the risk of an inverted helicopter sinking is much greater, and, consequently, every effort shall be made to maintain positive buoyancy. Additionally, an inverted helicopter has a much greater draft. The depth of water shall be closely monitored to avoid grounding and further damaging the airframe.

5. Scavenging. If conditions or available facilities do not permit salvage of the entire helicopter, as many component parts as possible should be saved. Scavenging shall be conducted with extreme caution, with a major emphasis on the safety of the personnel. Safety lines should be attached to both the helicopter and the salvage personnel, and additional flotation should be added to increase buoyancy. After these steps have been taken, personnel in boats and/or divers can attempt to strip electronic and other readily accessible components from the helicopter. Priority shall be given to the removal of classified equipment and/or material.

WARNING

SCAVENGING IS VERY HAZARDOUS, AND SHOULD ONLY BE ATTEMPTED IN REASONABLE SEA AND WEATHER CONDITIONS, AND ONLY AFTER ALL REASONABLE SAFETY PRECAUTIONS HAVE BEEN TAKEN. ONLY QUALIFIED DIVERS SHALL BE ALLOWED TO SCAVENGE AN INVERTED HELICOPTER.

6. Scuttling.

a. If circumstances require that the helicopter be abandoned, and classified equipment and/or material remain aboard, the helicopter should be scuttled.

b. If time permits, authorization should be obtained from Commandant (CG-711) before scuttling the helicopter.

c. Scuttling Procedure.

(1) Before sinking the helicopter, all safety or tending lines shall be removed.

(2) Destroy the buoyancy by rupturing flotation and breaching compartments holding fuel or air.

I. SALVAGE SPECIAL CONSIDERATIONS.

1. Each helicopter accident is examined in minute detail to determine the cause.
2. Both a legal investigation and a flight safety analysis are conducted. Examination of the helicopter following an accident is an important part of these proceedings.
3. Recovery of as many parts as possible is vital to an accurate investigation.
4. It is also important that as little damage or deformation as possible result from the salvage operation, as this could be easily confused with accident damage and lead to erroneous conclusions. Where additional damage or deformation cannot be avoided, it should be marked on the airframe, if feasible, and recorded in a log.
5. The record should include the names of the individuals involved, so they can be interviewed later concerning the condition of the helicopter before salvage.

CHAPTER 14. FLIGHT DECK FIRE FIGHTING.

A. INTRODUCTION. This chapter describes fire fighting and rescue procedures following a helicopter crash on a cutter. These procedures may be adjusted to the needs and operating requirements of the cutter. Additional information can be found in the Aircraft Fire Fighting and Rescue Manual, NAVAIR 00-80R-14 (series).

B. IN THIS CHAPTER. This chapter discusses the following topics:

1. General Flight Deck Fire Fighting Information.
2. Classification of Fires.
3. General Hazards and Precautions.
4. Fire Fighting Agents.
5. Fire Fighting Equipment.
6. Fire Party Organization.
7. Crash with Class B Fire.
8. Other Fires.
9. Jettisoning the Helicopter.

C. GENERAL FLIGHT DECK FIRE FIGHTING INFORMATION.

1. Fire Fighting Priorities.

   a. The OSL shall determine the priorities for fighting the fire.

   b. Generally, the following priorities apply:

      (1) Cool ordnance.

      (2) Protect helicopter occupants.

      (3) Extract helicopter occupants.

      (4) Contain the fire.

      (5) Extinguish the fire.

WARNING

DETONATION OF ORDNANCE ON THE HELICOPTER POSES THE GREATEST DANGER TO THE CUTTER AND PERSONNEL. WHEN THE HELICOPTER IS KNOWN TO HAVE ORDNANCE, THE FIRST PRIORITY SHALL BE TO COOL THE ORDNANCE.

NOTE

Jettisoning the helicopter shall only be accomplished as a last resort, and normally only when ordnance is involved, or in the case of Class D fires.

   c. If the helicopter is carrying ordnance (other than small arms ammunitions), the ordnance shall be kept cool to keep it from exploding, with a hose being dedicated to each piece of ordnance.

d. Until helicopter occupants are rescued, they shall be protected from the fire and heat by pushing the flames back away from the helicopter.

e. The helicopter carries large amounts of jet fuel that may spread a fire to other areas of the cutter such as the fantail or other decks. A blanket of AFFF shall be laid down on top of the fuel to keep the fire from spreading. The fire shall be extinguished as rapidly as possible to minimize damage.

2. Helicopter Familiarization.

a. It is vital that the fire party is thoroughly familiar with the helicopter.

(1) Component familiarization (airframe construction, location of personnel).

(2) Interior access.

(3) Location of ordnance and pyrotechnics.

(4) Battery location and disconnect procedure.

(5) Location of fuel bladders and other sources of combustible fluids.

(6) Auxiliary flotation equipment.

(7) Helicopter danger areas.

(8) Location of shutoff switches and levers in the helicopter, etc.

(9) Periodic crash drills.

b. Equipment Familiarization. All members of the fire party shall be familiar with their duties, and with the equipment used in fighting a flight deck fire. Sound knowledge of the equipment's designed capabilities and limitations will minimize the time required to bring an emergency under control.

c. Figure 14-1 thru Figure 14-3 show the location of the emergency exits on Coast Guard helicopters.

D. CLASSIFICATION OF FIRES.

1. Overview. A helicopter fire may consist of any or all of the four classes (A, B, C, and D). Helicopter components that support these classes of fires are:

a. Airframe construction.

b. Electrical and electronic components.

c. Fuel and lubricants.

d. Miscellaneous items normally carried by the helicopter.

2. Class A Fires. Class A fires on a helicopter are supported by materials such as seat cushions, soundproofing, life jackets, etc. These fires can be extinguished by using water in either a straight stream or spray pattern. If the fire is deep-seated, AFFF can be used as a smothering agent.

3. Class B Fires. Class B fires are associated with the combustible liquids (fuel, oil, hydraulic fluid, grease, etc.) on helicopters. Fuel fires produce intense heat and can spread rapidly beyond the immediate flight deck area. Fuel can be

present in large quantities while hydraulic fluid, oils and grease are present in small quantities. These fires can be extinguished by smothering the fire with AFFF, HALON, CO2, or Purple K Powder (PKP).

4. Class C Fires. Class C fires are associated with electrical and electronic equipment on helicopters. These fires can be extinguished by de-energizing the electrical equipment and smothering the fire with HALON, CO2, or PKP.

WARNING
WATER IN ANY FORM, PARTICULARLY SALT WATER, IS DANGEROUS WHEN USED ON ELECTRICAL EQUIPMENT.

5. Class D Fires.

   a. Class D fires are associated with combustible metals such as magnesium and titanium. These materials are used in many helicopters for weight conservation and in pyrotechnics. Major components that may be constructed from these materials are:

      (1) Main transmission.

      (2) Intermediate and tail rotor.

      (3) Gearbox casings.

      (4) Wheels.

   b. These materials ignite at 1200 °F and burn at approximately 4000 °F. These fires can be extinguished by using water in large quantities from a safe distance. In the case of an extensive Class D fire, jettisoning the aircraft may be the only option.

WARNING
TO PREVENT EYE DAMAGE, PERSONNEL SHOULD NOT LOOK DIRECTLY INTO CLASS D FIRES.

WARNING
A SOLID STREAM OF WATER SHOULD NOT BE USED BECAUSE OF THE POSSIBILITY OF AN EXPLOSION.

CAUTION
AVOID APPLYING AFFF ON CLASS D FIRES. AFFF IS NOT A COOLING AGENT. IT WILL INSULATE THE BURNING MASS CAUSING THE TEMPERATURE WITHIN TO INCREASE.

E. GENERAL HAZARDS AND PRECAUTIONS.

1. Overview. Hazards in addition to heat and smoke may exist with flight deck fires. Care shall be exercised to avoid exposing personnel to these hazards when fighting fires. Specific precautions will depend upon the materials involved.

2. Class A Combustibles. When helicopter cockpit and interior materials are burned or charred, they may produce toxic gases. These gases can include:

   a. Carbon monoxide.

   b. Hydrogen chloride.

   c. Hydrogen Cyanide.

3. Pyrotechnics and Ordnance.

   a. The fire party must be aware of the type and location of all pyrotechnics and ordnance on the helicopter. These materials can detonate even after the fire is extinguished. The OSL shall ensure that AFFF is continuously applied to these materials when exposed to the heat of a fire.

   b. Water should not be used for cooling until the fire is extinguished, due to the tendency of water to dilute or wash away the AFFF blanket. Post-fire cooling (preferably water) shall continue for a minimum of 15 minutes to allow the material to return to a safe ambient temperature.

WARNING

EXTREME CARE SHALL BE EXERCISED BY ALL PERSONNEL WHEN FIRES INVOLVE PYROTECHNICS AND ORDNANCE. PERSONNEL SHALL REMAIN CLEAR OF THE DISCHARGE PATH AND EXHAUST BLAST AREAS OF AIR LAUNCH WEAPONS.

4. Composite Materials. All modern helicopters contain some composite materials. The H-65 is constructed primarily of composite materials. It should be assumed that all fumes are toxic due to the nature of the compounds and bonding agents used in composite construction.

WARNING

BREATHING SMOKE OR FUMES FROM COMPOSITE MATERIAL FIRES POSES A SERIOUS AND POTENTIALLY LETHAL HEALTH RISK TO PERSONNEL.

   a. Composite Materials Reinforced with Carbon Graphite Fibers.

      (1) Composite materials that are reinforced with carbon graphite fibers provide superior stiffness, a high strength-to-weight ratio, and ease of fabrication. As a result, this material is being used extensively in advanced aircraft to replace heavier metal components.

      (2) Carbon graphite fibers can be released into the atmosphere if their epoxy binder burns. Once free, these small lightweight fibers can be transported up to several miles by air currents. The fibers may penetrate human tissue and become embedded in the lungs.

(3) The fibers can also damage unprotected electrical or electronic equipment because of their high electrical conductivity. Approximately 750 °F will cause the epoxy binder to ignite or decompose, releasing both fiber fragments and highly toxic gases. Similarly, mechanical agitation, especially an explosion, can fragment the fibers and cause them to become airborne.

NOTE

The fire party shall extinguish fires involving carbon fiber reinforced composites as quickly as possible, and provide maximum containment of the debris. The containment and cleanup function is extremely important and shall be treated as a special hazard prevention measure.

b. Composite Materials Reinforced with Boron Tungsten Fibers.

(1) Composite materials that are reinforced with boron tungsten fibers provide superior stiffness, a high strength to weight ratio, and ease of fabrication. They are being used to replace heavier metal components in new aircraft.

(2) Boron tungsten fibers can be released into the atmosphere if their epoxy binder burns. However, boron tungsten fibers pose less of a problem to unprotected electrical equipment than carbon graphite fibers because they are much heavier and thus are less likely to become airborne.

(3) They are also much less electrically conductive. Loose boron tungsten fibers are stiff and sharp and thus pose handling problems.

NOTE

The extinguishing, containment, and cleanup practices of boron tungsten fibers are the same as those for carbon graphite fibers.

c. Special Hazard Prevention Measure Involving Composite Material Fires.

(1) The normal sequence of events during a helicopter crash is:

(a) Impact.

(b) Fuel spill.

(c) Ignition.

(d) Fire or explosion.

(2) During this sequence, the release of composite fibers into the atmosphere and subsequent dispersion by smoke and air currents is very likely. The degree of contamination (fibers released) is assumed to vary directly with the degree of the fire and force of the explosion.

WARNING

IN MISHAPS WHERE CARBON GRAPHITE FIBERS ARE SUSPECTED, HELICOPTERS SHALL NEVER BE USED TO CONTROL THE FIRE, OR BE ALLOWED TO FLY OR HOVER OVER THE SITE AT ALTITUDES OF LESS THAN 500 FEET. THE ROTOR WASH WILL ONLY SERVE TO SPREAD THE FIBERS, AND INTRODUCTION OF FIBERS IN THE HELICOPTER'S ELECTRICAL SYSTEM COULD CAUSE A MALFUNCTION, RESULTING IN ANOTHER SERIOUS ACCIDENT.

d. Composite Material Immediate Action. In the event of a crash on a ship of an aircraft constructed with composite materials, the following actions shall be performed immediately to reduce hazards to personnel and equipment:

(1) Secure ventilation intakes on the fantail and near the crash site.

(2) Maneuver the ship to direct smoke and debris away from the superstructure and ventilation inlets.

e. Composite Material Extinguishing.

(1) While the following steps are common to all flight deck fires, they take on an added importance in the case of composite material fires:

(a) Approach and extinguish the fire from upwind.

(b) Extinguish the fire as quickly as possible.

(c) Maneuver the cutter to direct smoke and debris away from the superstructure and ventilation inlets.

(d) After the fire is overhauled, the flight deck and all adjacent areas shall be off-limits to personnel not directly involved in cleanup and securing of wreckage.

(2) Rescue crewmembers shall not remove proximity suits until all parts have been rinsed with water due to the danger of composite material inhalation.

WARNING

AIRBORNE FIBERS FROM ANY COMPOSITE MATERIAL CONSTITUTE A SERIOUS RESPIRATORY HAZARD TO PERSONNEL.

f. Composite Material Interim Containment. Interim containment of composite fibers is provided by spraying (wide-angle pattern) crash debris with AFFF. Permanent containment is possible once the debris has cooled.

g. Composite Material Special Protective Gear.

(1) Disposable coveralls and shoe covers may be necessary for many operations involving mishap cleanup and investigation.

(2) For situations in the earlier stages of cleanup and investigation, when airborne composite levels are unknown and may be accompanied by vapors released from smoldering debris, full face respirators, Self-Contained Breathing Apparatus (SCBA), Oxygen Breathing Apparatus (OBA) should be worn.

(3) For later stages of cleanup and investigation, when much of the debris has been contained and vapors are no longer being released, use of dust-fume-mist filter respirators may be appropriate.

(4) Safety glasses with side shields shall be worn when full face respirators are not used and eye contact with fibers and debris is of concern.

(5) Gloves (leather palm preferred) shall be worn when handling any type of composite debris. If the potential exist for biohazard contamination, rubber surgical gloves should be worn under the protective leather gloves.

(6) Personnel involved in cleanup, when relieved, shall remove and bag clothing for cleaning at a later date and shower thoroughly.

h. Composite Material Cleanup.

(1) Maneuver the cutter so that cleanup operations are downwind of superstructure and ventilation inlets.

(2) Wash down the flight deck and superstructure exposed to debris with saltwater, directing the residue over the side.

(3) Cover helicopter parts containing exposed composites with polyethylene sheeting, taping securely. If polyethylene sheeting is not available, as a less desirable alternative acrylic floor wax may be used as a composite fiber fixative.

(4) Contaminated clothing, equipment, and helicopter parts or debris shall be vacuumed and/or washed down before further use, and before being moved inside the cutter's structure.

(5) If contamination is known or suspected to have entered the ventilation system, take immediate action to ensure that the filtration system is operating properly. If the system is not operating properly, shut it down until temporary filtration can be provided at outlets leading to compartments.

F. FIRE FIGHTING AGENTS.

1. Overview. Fire fighting agents available for fighting flight deck fires on Coast Guard Cutters include: AFFF, HALON, CO2, and PKP. HALON is the installed fire fighting system on Coast Guard helicopters.

WARNING

HALON, CO2, AND PKP ARE ALL RAPIDLY DISSIPATED INTO THE ATMOSPHERE. UNLIKE AFFF, THESE AGENTS DEVELOP NO VAPOR SEAL, AND A FUEL FIRE EXTINGUISHED BY THEM IS LIKELY TO RE-IGNITE.

2. Aqueous Film Forming Foam (AFFF). AFFF is the primary agent used to combat flight deck fires. It has proven to be a superior extinguishing agent against fuel fires.

   a. AFFF concentrate consists primarily of fluorocarbon surfactant materials that are noncorrosive, and have an unlimited shelf life when stored in a protected area where the temperature ranges from 32 °F (0 degrees C) to 120 °F (48 degrees C).

   b. AFFF concentrate shall meet current military specification standards. Though AFFF concentrate by itself is noncorrosive, when mixed with seawater, the resultant AFFF solution may exhibit corrosive properties.

WARNING

FAILURE TO FOLLOW THE MANUFACTURER'S STORAGE PROCEDURES (EXCESSIVE HEAT OR FREEZING) MAY CAUSE AFFF TO BREAK DOWN AND SEPARATE, DEGRADING ITS ABILITY TO FORM A VAPOR SEAL.

   c. AFFF Fire Fighting Efficiency. The unique extinguishing and securing action of AFFF on flammable liquid fires results from a combination of rapid foam blanketing and vapor sealing. When properly applied, the AFFF foam blanket rapidly yields a very thin layer of AFFF solution that floats on top of flammable liquids to extinguish the fire and form a vapor seal, which, in turn, restricts further emission of flammable vapors.

   d. AFFF Application. AFFF fire extinguishing efficiency is not critically dependent on the expansion of the solution. It can be applied with either approved non-air aspirating nozzles or air aspirating foam nozzles. However, the variable pattern fog nozzle is preferred because of the rapid pattern adjustment afforded the firefighter. Additionally, these nozzles produce more AFFF foam, resulting in faster control and extinguishment of the fire.

NOTE

AFFF is compatible with HALON, CO2, and PKP.

3. HALON. HALON is a colorless, faintly sweet smelling, electrically nonconductive gas (bromochlorodifluoromethane) that leaves no residue to clean up.

   a. HALON is primarily used on Class B and C fires. However, it is effective on Class A fires.

b. Fumes from the discharge of a HALON extinguisher may produce dizziness and impaired coordination on the part of personnel. The fumes come from the natural HALON agent, and from the products of decomposition that result through exposure of the agent to the fire. Exposure to the agent is of less concern than is the exposure to the products of decomposition.

c. In using HALON in unventilated spaces or confined areas, personnel should avoid breathing the gases produced by thermal decomposition.

WARNING

DO NOT USE HALON ON CLASS D FIRES. IT HAS NO BLANKETING EFFECT, AND, IF IT REACHES A CLASS D FIRE IN THE LIQUID STATE, THE POSSIBILITY OF AN EXPLOSIVE REACTION EXISTS.

d. HALON Fire Fighting Efficiency.

(1) HALON extinguishes fires by inhibiting the chemical chain reaction of the combustion process. It is virtually noncorrosive, nonabrasive, and is at least twice as effective as CO2 on Class B fires.

(2) HALON is five times heavier than air, has the ability to penetrate hard-to-reach places, and evaporates completely, leaving no residue. HALON has a very high insulation property and has been successfully tested on electrical equipment carrying 100,000 volts.

(3) Although the agent is retained under pressure in a liquid state and is self-expelling, a booster charge of nitrogen is added to ensure proper operation. Upon actuation, the vapor pressure causes the agent to expand so that the discharge stream consists of a mixture of liquid droplets and vapor.

e. HALON Application.

(1) Initial application shall start close to the fire. On all fires, the discharge should be directed at the base of the flames. Sweep the agent stream back and forth across the leading edge of the fire, overshooting on both sides, and continue to push the leading edge of the fire back until the fire is extinguished.

(2) These units have an effective discharge range of 10 to 30 feet, depending on ambient conditions, and a discharge time of 10 to 40 seconds, depending on the extinguisher size and application rate.

4. Carbon Dioxide (CO2). CO2 is a colorless, odorless gas that is approximately 1 1/2 times heavier than air. Use of CO2 on aircraft engine fires is recommended. CO2 is stored in rechargeable containers designed to hold pressurized carbon dioxide in liquid form at atmospheric temperatures.

WARNING

EXPOSURE TO CO2 IN HIGH CONCENTRATIONS FOR EXTENDED PERIODS CAN BE FATAL.

WARNING

THE USE OF CO_2 IN INERT FLAMMABLE ATMOSPHERE IS PROHIBITED. WHEN A CO_2 EXTINGUISHER IS DISCHARGED, THE LIQUID CO_2 EXPANDING THROUGH THE NOZZLE AND CONE BECOMES SOLID (COMMONLY CALLED "SNOW"). THIS "SNOW" CONTACTING AND SEPARATING FROM THE EXTINGUISHER CONE BECOMES ELECTRICALLY CHARGED, AS DOES THE EXTINGUISHER ITSELF. IF THE CHARGED "SNOW" CONTACTS AN INSULATED METAL OBJECT, IT WILL CAUSE THE OBJECT TO BECOME CHARGED. TESTS INDICATE VOLTAGE GREATER THAN 15 KILOVOLTS CAN BE DEVELOPED ON INSULATED METAL OBJECTS FROM A 1- TO 2-SECOND APPLICATION OF CO_2 FROM AN EXTINGUISHER. THIS VOLTAGE IS SUFFICIENT TO CAUSE A SPARK, POSSIBLY RESULTING IN AN EXPLOSION.

a. CO_2 Fire Fighting Efficiency. CO_2 extinguishes fires by displacing oxygen in the atmosphere to a level below the percent that is required to support combustion.

b. CO_2 Application.

(1) Agent application should start at the upwind edge and be directed slowly in a side-to-side sweeping motion, gradually moving toward the back of the fire.

(2) CO_2 extinguishers have a limited discharge range of 3 to 8 feet and a discharge time of 8 to 44 seconds, depending on the extinguisher size and application rate.

5. Purple K Powder (PKP). PKP is a dry chemical primarily intended for use on Class B fires. The ingredients used in PKP are nontoxic. However, the discharge of large quantities may cause temporary breathing difficulty, may seriously interfere with visibility, and may cause disorientation.

NOTE

Potassium bicarbonate is the principal base chemical used in the production of PKP dry chemical agent. Various additives are mixed with the base material to improve its stowage, flow, and water repellence characteristics.

a. PKP Fire Fighting Efficiency.

(1) The major disadvantage of PKP is that it does not produce a lasting inert atmosphere above the surface of a flammable liquid; consequently, its use will not result in permanent extinguishing if reignition sources are present.

(2) PKP is an effective agent for three-dimensional fires, and is commonly used as a complementary agent in conjunction with AFFF.

(3) Hand extinguishers can be used for mop-up of small fires in and around a helicopter.

CAUTION

PKP MAY HARDEN AFTER BEING EXPOSED TO MOISTURE. IT IS THEREFORE IMPORTANT TO AVOID EXPOSURE TO ANY MOISTURE DURING STOWAGE, HANDLING, AND RECHARGING.

b. PKP Application.

(1) PKP extinguishers have a discharge range of approximately 10 to 40 feet. Discharge time varies from 8 to 60 seconds depending on extinguisher size.

(2) When used on flammable liquid fires, the powder discharge from a PKP extinguisher should be directed at the base of the flames. Best results are obtained by attacking the upwind edge of the fire and progressing forward, moving the nozzle rapidly with a side-to-side sweeping motion.

(3) The mechanical operation of the unit shall be IAW the printed instructions on the extinguisher.

WARNING

IF PKP IS DIRECTED OR INGESTED INTO A HELICOPTER ENGINE, THE AVIATION PERSONNEL SHALL BE NOTIFIED. PKP CANNOT BE COMPLETELY REMOVED FROM A HELICOPTER ENGINE WITHOUT DISASSEMBLY TO REMOVE DEPOSITS THAT RESTRICT INTERNAL COOLING AIR PASSAGES, AND REDUCE ENGINE PERFORMANCE.

G. FIRE FIGHTING EQUIPMENT.

1. Overview. Minimum equipment and material standards for fire fighting are contained in Naval Air Warfare Center, Aircraft Division (NAVAIRWARCENACDIVLKE) Air Capable Ship Aviation Facilities Bulletin No. 1 (series) and the Coast Guard Shipboard Aviation Allowance Equipage List (AEL). Maintenance and operation of this equipment are described in naval engineering instructions.

2. Crash Kit. The crash kit is stored in a canvas tool roll and shall be broken out and inspected prior to flight quarters. It contains the following tools:

a. Axe, fire (full size pick head).

b. Halligan tool.

c. Cable cutter (with notched blade).

d. Flashlight, safety, two-cell.

e. Hacksaw (with six spare blades).

f. Knife, rescue, V-blade (with three sets of spare blades).

g. Pliers, lineman.

h. Pliers, rib joint, water pump (10-inch).

i. Saw, metal cutting.

j. Screwdriver, straight slot (4-inch).

k. Screwdriver, straight slot (8-inch).

l. Screwdriver, Phillips (4-inch).

m. Screwdriver, Phillips (8-inch).

n. Wrench, vice grip (10-inch).

o. Wrench, adjustable (12-inch).

p. Dzus key (if not on end of V-blade knife).

3. Proximity Suits. The rescue crew wears aluminized proximity suits. The proximity suit consists of:

a. An aluminized coat and trousers, each with removable liners.

b. An aluminized hood with a gold-coated face shield.

c. Aluminized gloves, glove liners.

d. Knee-length rubber MA-1 fireman's boots with safety toes and soles shall be worn with the suit.

NOTE

Only two piece proximity suits are authorized for use on the flight deck.

(1) Proximity Suit Outer Garment. Outer garments are locally procured and shall comply with current NFPA requirements.

NOTE

The outer garments are normally made of 100 percent aramid fiber but may also be made of a combination of aramid and asbestos. Those containing asbestos fiber may only be used if the asbestos fiber is not exposed (the inside of the garment shall have a protective lining and the ouside coating shall remain intact).

(2) Proximity Suit Outer Garment Maintenance. The heat reflectivity of the proximity suit is reduced when the aluminized coating becomes worn, stained, soiled, or damaged.

(a) Coats and trousers should be hung on hangers, with suitable hanging space, to prevent the aluminized coating from creasing or cracking. If folded, the folds should be loose, since sharp folds will crack the coating.

(b) Dirt and soot should be sponged off with mild soap and water, and the aluminized surface should be dried with a clean cloth, rubbing gently to avoid removing the aluminum.

(c) Allow the suit to hang in a ventilated location at room temperature until it is completely dry.

(d) Grease stains may be removed using dry-cleaning solvents (isopropanol or perchloroethylene react with the aluminum surface and may etch the metal). Clean the suit with water and wipe it dry, then allow the suit to hang in a ventilated location at room temperature until it is completely dry.

(e) AFFF may be removed by sponging the suit clean with mild soap and water. Wipe the suit dry and hang it in a ventilated location at room temperature until it is completely dry.

(f) Corrosive chemicals will react with the aluminized coating and may etch the metal. Clean the suit with water and wipe it dry. Allow the suit to hang in a ventilated location at room temperature until it is completely dry.

(g) Outer garments should be replaced when the aluminized coating wears off or becomes etched, or when the fabric cracks or tears.

CAUTION

THE ALUMINIZED COATING ON A PROXIMITY SUIT CAN BE DAMAGED BY AFFF IF IT IS NOT WASHED OFF IMMEDIATELY.

(3) Proximity Suit Liners. Quilted liners for the coat and trousers provide insulation against the heat of the fire. The liners are made of 100 percent aramid fiber. Their size shall match the size of the outer garment (coat or trousers).

(4) Proximity Suit Liner Maintenance. When the liners become soiled, they should be removed from the outer garments, and washed IAW the washing instructions on the liners.

(5) Proximity Suit Face Shield. The gold-coated face shield is a heat reflective shield. It is installed over the plastic faceplate in the proximity hood.

(6) Proximity Suit Face Shield Maintenance. The face shield shall be kept in excellent condition to maintain its heat-reflectivity. When the gold surface of the face shield becomes worn, scratched, or marred, it shall be replaced immediately. Otherwise, up to 90 percent of the heat protection offered by the face shield may be lost.

(a) Keep the protective cover in place when carrying or storing the hood to minimize damage to the gold-coated surface.

CAUTION

REMOVE THE PROTECTIVE COVER BEFORE USING THE HOOD.

(b) Avoid touching or wiping the gold surface as much as possible.

(7) Proximity Suit Glove Liners. Summer-weight aviator gloves act as glove liners, providing some insulation from the heat of the fire when worn under aluminized gloves. They also protect the rescue crewmember from flash burns during crash overhaul when the aluminized glove is removed to effectively operate fittings accessing enclosed areas.

(8) Proximity Suit Glove Liner Maintenance. When the gloves become soiled, they should be hand-washed in warm, soapy water and drip-dried.

4. Fire Extinguishers.

a. Two 15-lb CO2 and two 18-lb PKP fire extinguishers immediately available to the flight deck.

b. An additional two 15-lb CO2 and two 18-lb PKP extinguishers are provided in the hangar.

c. Inspection tags and lead wire or plastic tamper seals shall be removed from the flight deck and hangar fire extinguishers because they present a FOD hazard. Sewing thread may be used to provide a tamper seal.

d. Flight deck CO2 extinguishers used for engine start fire guard are fitted with 3-foot extension pipes between the hoses and the funnel nozzles.

e. The pipes are insulated to prevent injury to personnel.

WARNING

IF AT ANY TIME AN EXTINGUISHER SHOWS EVIDENCE OF CORROSION OR MECHANICAL DAMAGE, IT SHALL BE HYDROSTATICALLY TESTED.

5. Primary Hose Stations. The two primary hose stations, one on the port side and one on the starboard side, both piped to the installed motorized AFFF proportioner, are provided for flight deck fire fighting. The WMSL 418 cutter class is equipped with AFFF hose reels and 125 GPM vari-nozzles.

a. The primary hose stations are equipped with two spanner wrenches and 1 ½-inch fire hoses. The hose shall be long enough to reach the aft edge of the flight deck. Each hose is fitted with a 125-GPM vari-nozzle.

b. If the nozzles are of a variable flow rate design, the variable flow rate adjustment is pinned in the 125 GPM setting.

c. A minimum equipment list shall be permanently attached to the bulkhead at each station.

6. Secondary Hose Station.

a. A secondary hose station shall be equipped with two spanner wrenches and 1 ½-inch fire hoses. The hose shall be long enough to reach the aft edge of the flight deck.

b. A 90-GPM in-line eductor is installed at the fireplug and a 95-GPM vari-nozzle is installed on the end of the hose.

c. If the nozzle is of a variable flow rate design, the variable flow rate adjustment is pinned in the 95 GPM setting.

d. A minimum of 50 gallons of AFFF concentrate shall be provided at the hose station, or in an alternate location immediately available to the hose station during flight operations.

e. A minimum equipment list shall be permanently attached to the bulkhead at each station.

H. FIRE PARTY ORGANIZATION.

1. Onscene Leader (OSL). The OSL exercises complete control of the fire party during flight operations, directing both the rescue crew and the hose teams during a flight deck fire. The OSL is normally stationed on the upwind side of the cutter, forward of the flight deck (inside the hangar on WAGBs and WMSL).

2. Primary Hose Teams . Each primary hose team consists of a hose team leader, a nozzle man, and at least one hose tender. The hose team leader directs the advance and/or withdrawal of the hose and application of fire fighting agent by the nozzle man as directed by the OSL. The last hose tender also acts as plug man.

3. Secondary Hose Team. The secondary hose team consists of a hose team leader, a nozzleman, one hose tender, and an AFFF handler. The hose team leader directs the advance and/or withdrawal of the hose and application of fire fighting agent by the nozzle man as directed by the OSL. The hose tender acts as plugman.

NOTE

The tiedown crew may be designated as the secondary hose team (see Chapter 2).

4. Rescue Crew. The rescue crew consists of two personnel clothed in proximity suits.

   a. Rescue Crew Function.

      (1) The primary function of the rescue crew is to extricate personnel from the helicopter following a crash or during a fire.

      (2) The rescue crew is stationed with the OSL as environmental conditions permit. If heat conditions have the potential to cause excessive sweat buildup for the rescue crew, they may be repositioned to the nearest climate-controlled space that affords instant communication and access to the flight deck in case of fire/crash on deck.

WARNING

THE RESCUE CREW SHOULD NOT STAND BY FULLY SUITED UP DURING NORMAL FLIGHT OPERATIONS. IF THE LINING OF THE PROXIMITY SUIT BECOMES SWEAT SOAKED, THE CREWMEMBER MAY RECEIVE STEAM BURNS WHEN EXPOSED TO A FIRE.

NOTE

Boots and trousers shall be worn. The jacket, hood, and gloves shall be immediately available, but need not be worn unless actually responding to a flight deck fire.

NOTE

The rescue crew shall wear an LPU-30P lifevest under the trouser suspenders. They shall wear hearing protection while on station.

b. Hot Refueling Fire Guard. When standing fire guard, one rescue crewmember is fully suited up. The crewmember is posted with a PKP fire extinguisher, at the helicopter's fueling point, in position to discharge the extinguisher as directed by the helicopter crewmember.

5. Engine Start Fire Guard, H-65/H-60. For engine start, the aircrew is stationed at the side of the helicopter. In case of an engine fire, the aircrew shall alert the pilot. The pilots shall use the internal engine fire extinguisher system to complete initial fire suppression efforts. A 15 lb CO_2 fire extinguisher is available forward of the flight deck to aid in extinguishing the fire.

6. Engine Start Fire Guard, Other Helicopters. For engine start, a member of the fire party (not the OSL) is stationed with a CO_2 fire extinguisher with extension pipe at the side of the helicopter, in position to discharge the extinguisher when directed by the helicopter aircrew.

I. CRASH WITH CLASS B FIRE.

1. Overview. The OOD shall activate the helicopter crash alarm and maneuver the cutter to provide wind across the flight deck (330-030 degrees relative) to protect the fire party. Once all motion and the crash alarm stops, the fire party should proceed quickly to the flight deck and follow the procedures described for their assigned duties. The OSL shall activate the AFFF proportioner, assess the severity of the fire, and direct the necessary response.

2. Flight Deck Fire Monitor Option. The cutter may elect not to man the positions of OSL and the primary and secondary hose teams during FLICON ONE when all the following conditions are met:

   a. The cutter has a flight deck fire monitor system. The cutter should also use the flight deck foam flooding system, if equipped.

   b. The AFFF pump controls and the flight deck fire monitor control station are both manned.

c. The flight deck fire monitor control station has a clear view of the flight deck “visually” or is equipped with an operable FDVS that can provide the operator a clear view of the entire flight deck.

d. The CO and Senior Aviator concur that safety will remain adequate.

3. Flight Deck Fire Monitor Initial Response When Hose Teams Are Not Manned.

a. The flight deck fire monitor operator immediately activates the AFFF system, flight deck fire monitor, and the flight deck flooding system, if equipped, directing the discharge directly on the fire site.

b. Rescue crew takes position at the hangar door.

c. Fire parties shall be piped to the flight deck to assist and serve as a backup to the flight deck fire monitors.

WARNING

ALL EQUIPMENT ASSOCIATED WITH THE FLIGHT DECK MONITOR CONTROL STATION SHALL BE FULLY OPERABLE TO USE THE OPTION OF NOT MANNING FIRE PARTIES. IF ANY PART OF THE EQUIPMENT FAILS, OR IF THE OPERATOR LOSES HIS OR HER ABILITY TO VIEW THE FLIGHT DECK, FIRE PARTIES SHALL BE FULLY MANNED.

4. Class B Fire Initial Response. On ships not equipped with flight deck fire monitors or on monitor-equipped ships when hose teams are manned:

a. Onscene Leader (OSL).

(1) Knowing POB before the helicopter lands is critical when responding to a crash.

(2) After motion has stopped and debris have settled, immediately take charge of the flight deck and begin directing hose teams.

(3) When fighting a composite aircraft fire, ensure that smoke and fumes are being blown away from the fire party.

(4) Once the hose teams are in place, direct the hose teams to push the fire aft, inboard to outboard, and from top of the aircraft to the deck.

(5) When a clear path to the aircraft is established, send the rescuemen into extract crew from the aircraft. While rescuemen are performing their duties, direct the hose teams to continue to advance together and fight the fire.

(6) When the fire is extinguished (on the flight deck and fantail), back hose teams out together to an appropriate location determined by the OSL. They shall stand by until “Charlie” checks are complete.

(7) Direct the rescuemen to perform the post-fire “Charlie” checks. Upon completion of these checks, begin post-fire cleanup.

(8) Assign a hose team to act as a reflash watch.

(9) Maintain a reflash watch for at least one hour after “Charlie” checks are completed.

(10) Ensure the bridge and DC Central is kept informed of the progress. At a minimum, report: “AIRCREW EXTRACTED,” “FIRE OUT,” and “CHARLIE” checks complete.

WARNING

AVOID SPRAYING WATER OR AFFF ON THE RESCUEMEN. THE HEAT FROM THE FIRE WILL “BOIL” THE PERSON INSIDE WHEN WET. HOWEVER, IF THEY ARE ACCIDENTALLY SPRAYED, KEEP THEM WET.

b. Hose Teams.

(1) Proceed directly to the hose station and activate the AFFF system.

(a) Set nozzles to a wide “V” pattern for cooling while moving into position outboard of the hose.

(b) When agent is available, reset nozzles to the narrow “V” pattern for fighting the fire.

(c) When directed by OSL, attack the fire, pushing it aft along the flight deck. Use an “L” pattern from top of the aircraft to the flight deck and then outboard to the deck edge.

(2) Initial efforts should be to concentrate on clearing a path to the aircraft for the rescuemen. If the aircraft is known to have ordnance (except small arms ammunition), priority is shifted and a hose is dedicated to immediately cooling off the ordnance.

(3) Once a path has been cleared, continue to push the fire aft along the flight deck.

(4) Continue pushing the fire aft to the fantail. Advance as directed by OSL, as quickly as the fire allows, but no faster than the opposite hose team.

(5) Both hose teams should arrive at the aft edge of the flight deck at the same time.

(a) If the fire spreads to the fantail, alert the OSL. This information shall be passed immediately to DC Central for action.

(b) Continue to fight the fire on the fantail until hose teams from below take over.

(6) Once the fire is out on the flight deck and the fantail (or another hose team is fighting the fantail fire), announce to the OSL, “FIRE OUT, STARBOARD/PORT SIDE.”

(a) The OSL shall direct the hose teams to “BACK OUT AT THE NOZZLEMAN’S PACE.”

(b) Hose teams shall back out together to a location determined by the OSL.

(c) They shall remain in position to provide cover for the rescue men until “Charlie” checks are complete.

(7) The OSL shall set a reflash watch with one of the hose teams at the completion of the “Charlie” checks. A reflash watch shall be maintained for at least 1 hour.

(8) In the event of a hose casualty, the following procedures shall be followed:

(a) The affected hose team shall notify the OSL.

(b) The OSL backs out both hose teams.

(c) The operable hose team will provide cover while the secondary hose team moves into position.

(d) Once there are two operating hoses, the OSL directs both teams to attack the fire.

WARNING

IT IS IMPERATIVE FOR BOTH HOSE TEAMS TO BACK OUT UNTIL THERE ARE TWO WORKING HOSES. IF NOT, THE FIRE COULD CIRCLE AROUND BEHIND THE OPERABLE HOSE CAUSING INJURY OR DEATH.

c. Rescuemen.

(1) The following equipment is the minimum that shall be worn during all flight quarter evolutions:

(a) Fire fighter’s rubber boots.

(b) Aluminized pants.

(c) Lifevest (under suspenders).

(d) Hearing protection.

(e) LPU-30 vest.

(2) In the event an aircraft crashes on deck, the aluminized coat, Nomex® aviator gloves, aluminized gloves and helmet shall be donned before proceeding to the flight deck.

(3) Bring the Crash Kit, Halligan tool, and PKP fire extinguisher to the flight deck.

(a) Report to the OSL.

(b) Place the PKP extinguisher and Crash Kit on the deck behind the OSL.

(c) Remain in close proximity to the OSL; prepare to evacuate the aircrew when directed by the OSL.

(4) When directed by the OSL, proceed with the Halligan tool to the nearest entry point of the aircraft. (Refer to Figure 14-1 through Figure 14-3 for Coast Guard aircraft.) Begin aircrew evacuation by following the procedures in Paragraph 14.I.4.d.

(5) Evacuated personnel should be taken to the stretcher bearers for transport to a triage station.

(6) When all personnel have been evacuated, inform the OSL. Remain with the OSL awaiting the post fire “Charlie” check tasking.

(7) Two rescuemen shall conduct the Charlie checks; one with the Halligan tool in front, the other directly behind with a PKP fire extinguisher. The PKP extinguisher is for personnel protection; the hose teams will fight any reflash.

(8) Charlie checks begin at the nose of the aircraft by disconnecting the battery.

(9) Continue Charlie checks on each side of the aircraft from top to bottom using the back of the hand (wearing the aviator Nomex® gloves) or approved heat detecting device. Any “hot” spots should be exposed using the Halligan tool.

(10) If a residual fire is found, notify the OSL immediately. The fire teams should be directed to extinguish it.

(11) When backing out, the rescueman with the Halligan tool will guide the rescueman with the PKP extinguisher back to the OSL. The rescueman with the PKP should always face the aircraft; the other should face forward.

(12) Upon completion of one side of the aircraft (front to back, top to bottom) report to the OSL, “CHARLIE CHECKS COMPLETE PORT/STARBOARD SIDE.” The OSL should direct the completion of the checks.

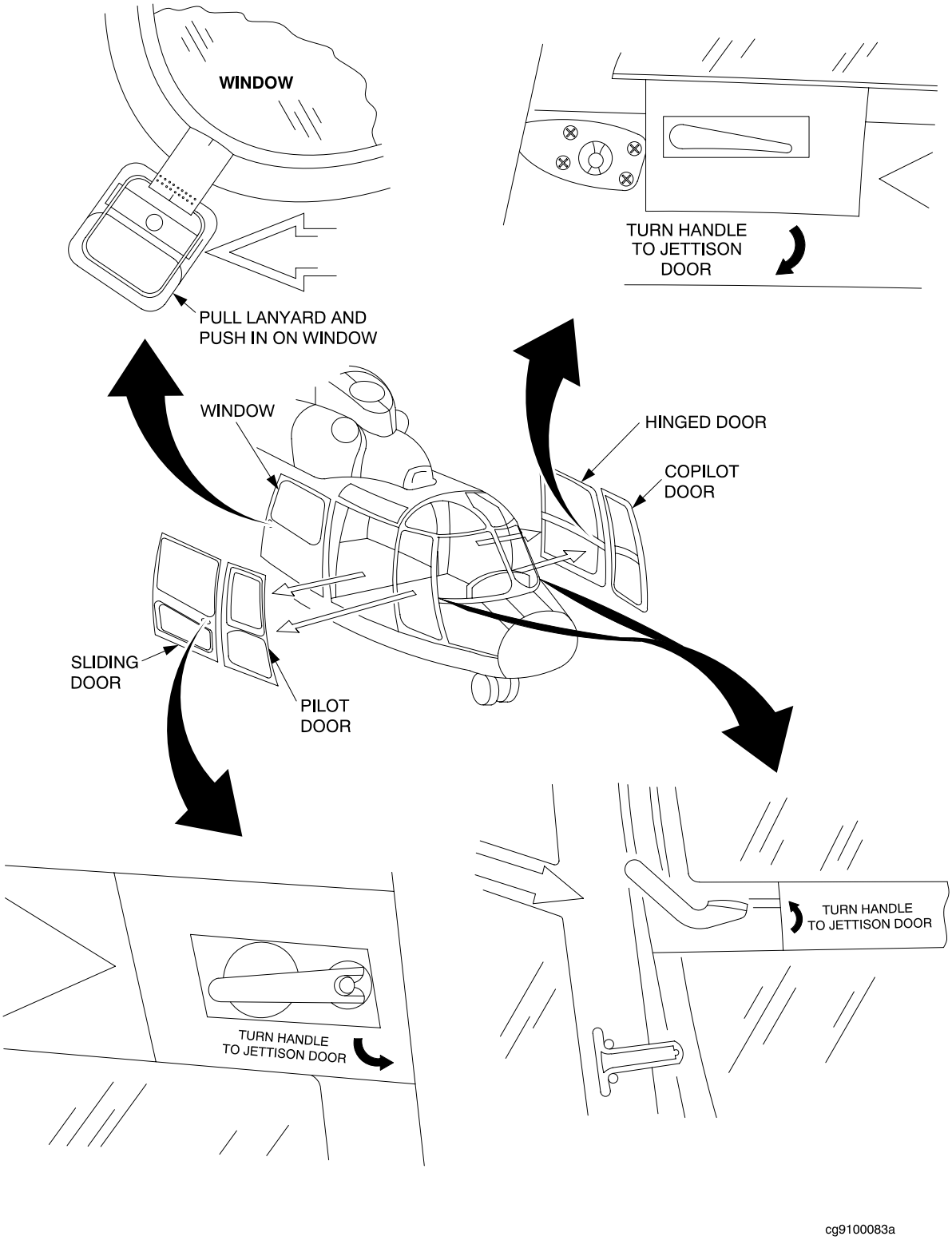

Figure 14-1. H-65 Emergency Exits

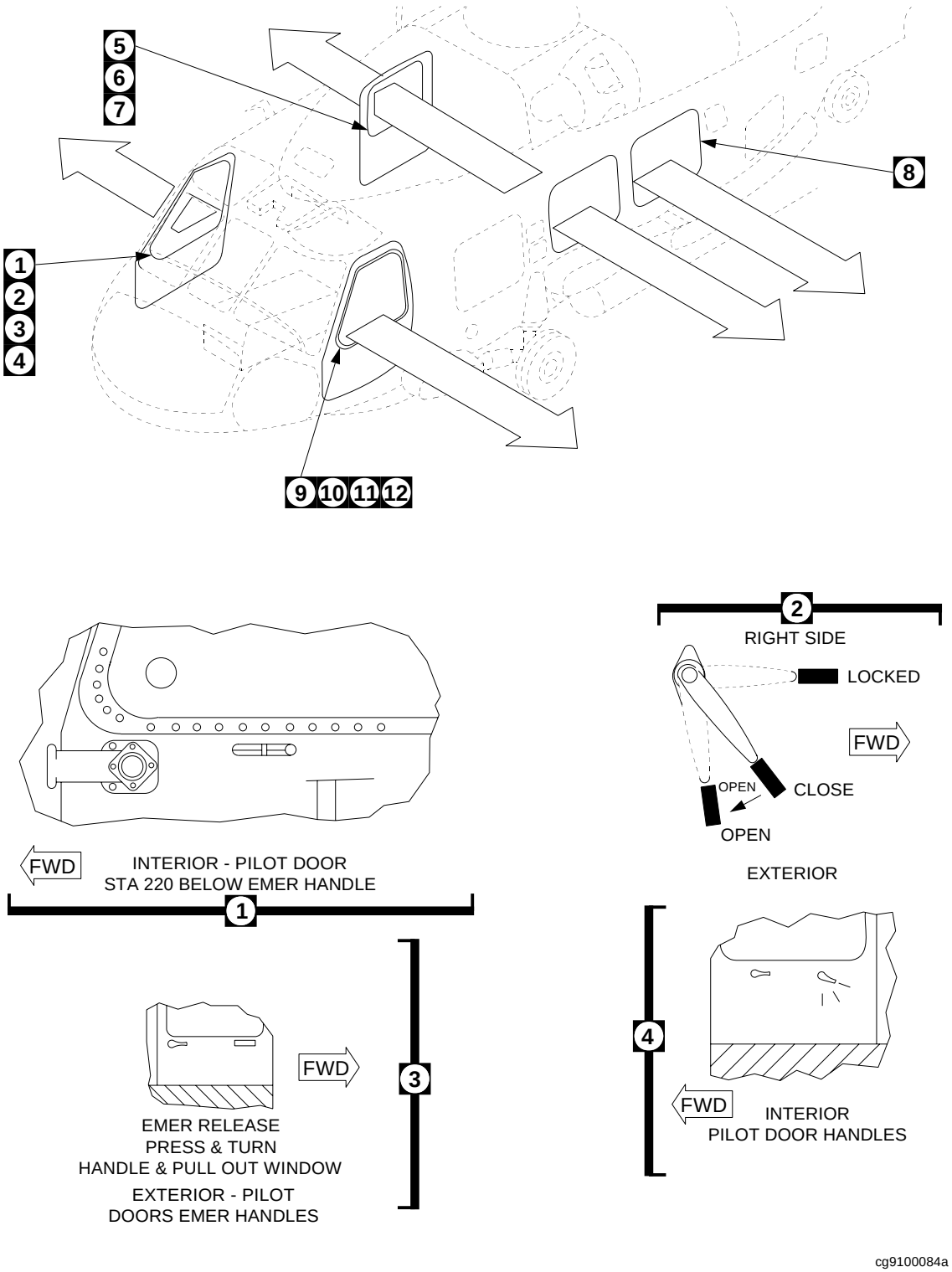

Figure 14-2. H-60 Emergency Entrances and Exits

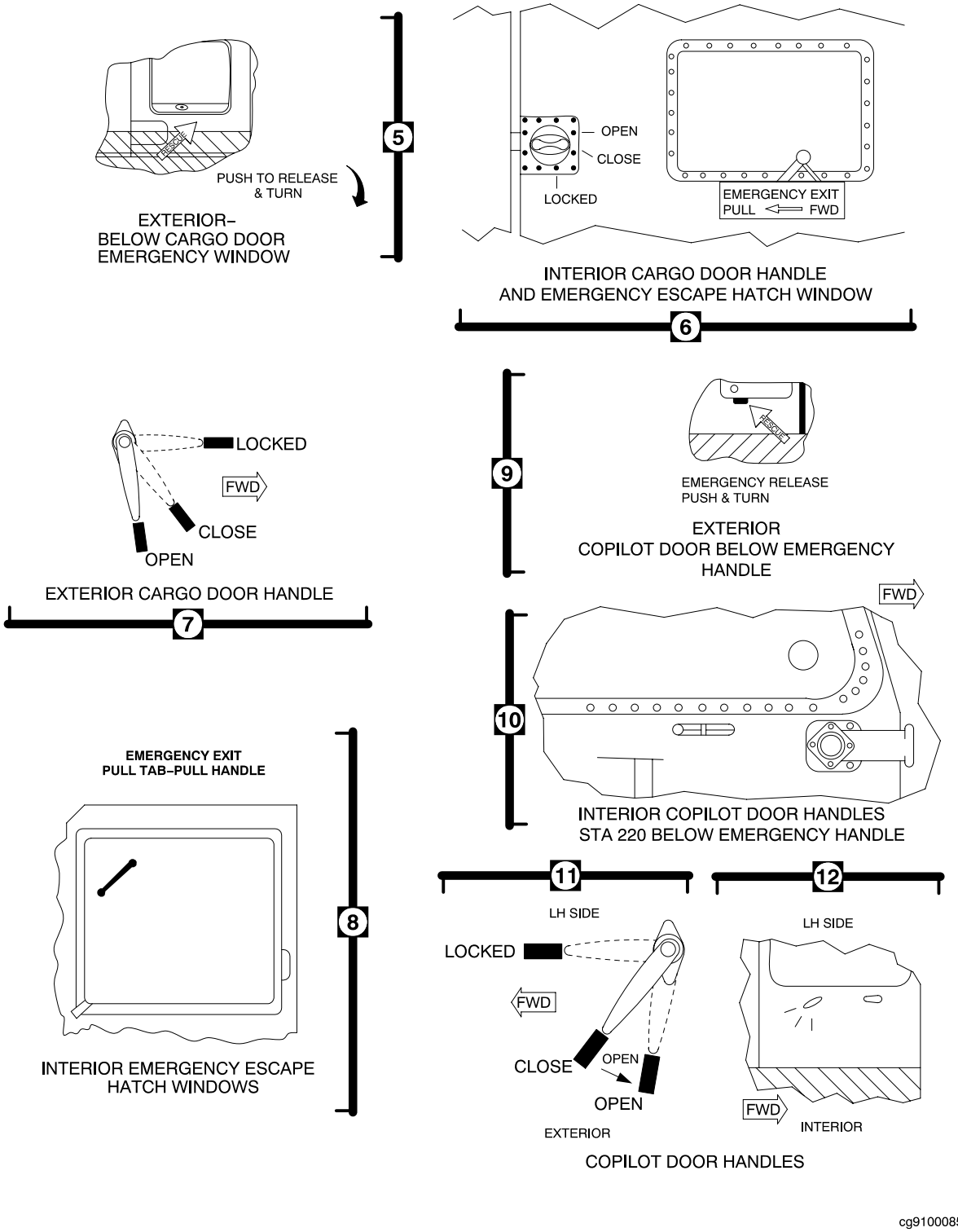

Figure 14-3. H-60 Emergency Entrances and Exits (Continued)

WARNING

ORDNANCE SHALL BE COOLED FOR AT LEAST 15 MINUTES AFTER THE FIRE IS EXTINGUISHED BEFORE IT IS CONSIDERED SAFE. COOLING MAY BE CONDUCTED USING SALTWATER AFTER THE FIRE HAS BEEN COMPLETELY EXTINGUISHED. AFTER THE COOLING PERIOD, ORDNANCE SHOULD BE DISPOSED OF IAW CURRENT DIRECTIVES.

NOTE

When evacuating aircrew, disconnect the five-point harness by twisting the release mechanism. If this does not work, use the V-blade knife to cut the straps. Disconnect the helmet cord before pulling the aircrew from the aircraft.

d. Cockpit Evacuation. The fastest evacuation route from the cockpit is normally through the cockpit doors or windows. They can be jettisoned by activating the emergency release handles (see Figure 14-1 through Figure 14-3).

(1) If the doors or windows do not release, use the Halligan tool to free them. If the Halligan tool is not required for rescue, place it, points down, in a safe area such as under the aircraft or near the nose.

(2) Reach into the cockpit, and release the occupant's lapbelt and shoulder harness. If difficulty is encountered, use the V-blade knife to cut the straps.

(3) Unplug or cut the helmet cord.

(4) Removing the occupant from the seat.

(a) If the seat is at a height at or above the rescue crew member's shoulders, a fireman's carry may work best.

(b) If the seat is below the height of the rescue crew member's shoulders, it may be easier to grasp the occupant from behind under the arms and drag them out.

(5) If access cannot be gained through the cockpit doors or windows, evacuation may take place through the main cabin. This requires the rescue crew to enter the cabin of the helicopter to extract occupants, proceed forward to the cockpit, extract the occupants, and exit the helicopter back through the cabin.

CAUTION

WHEN LAYING THE HALLIGAN TOOL ON THE DECK, ALWAYS LAY IT WITH THE POINT FACING DOWN TO PREVENT SERIOUS INJURY TO PERSONNEL.

e. Cabin Entry.

(1) Personnel in the cabin are best evacuated through the cabin door located on the right side of the helicopter. The door is always opened before takeoff and landing to provide a quick exit in case of an emergency.

(2) Access can also be gained through the cabin windows, and, depending on the model of helicopter, through a ramp at the back of the cabin, or through the door on the left of the cabin (see Figure 14-1 through Figure 14-3).

NOTE

Cabin occupants are normally strapped into their seats with a lap belt, or a lap belt and shoulder harness.

f. Forced Entry.

(1) Forced entry is time-consuming and dangerous, and should be used only as a last resort. Occupants can be injured by the tools used to force entry. There is the danger of rupturing fuel lines and bladders, or of cutting into live electrical circuits, producing electrical shock and arcs that can ignite fuel. Figure 14-1 through Figure 14-3 depict the various forced entry points on Coast Guard helicopters.

(2) If the aircraft rests on its side and one or more members of the aircrew are incapacitated, the windscreen may be the best point of access, especially for personnel in the cockpit. Evacuating incapacitated crewmembers from the cabin area with the helicopter on its side may require a ladder to enter through the cabin door on top of the wreckage.

J. OTHER FIRES.

1. Engine Compartment Fire During Start. An engine compartment fire can be identified by flames and smoke billowing from the engine compartment. When directed by the aircrew, the fire guard should direct the full charge of the extinguisher into the engine compartment through the designated openings in the engine cowling. If the fire persists, additional fire extinguishers or AFFF should be discharged into the engine compartment until the fire is out.

CAUTION

AGENTS OTHER THAN CO2 MAY CAUSE CORROSION DAMAGE. THEY SHOULD BE USED ONLY AFTER THE TWO FLIGHT DECK CO2 EXTINGUISHERS HAVE BEEN FULLY DISCHARGED.

NOTE

Coast Guard helicopters have installed fire suppression systems and shall be the primary means of extinguishing engine fires.

2. Battery Fire. The helicopter uses a nickel cadmium (NICAD) battery that is subject to a condition known as a thermal runaway.

   a. A thermal runaway occurs when a battery becomes overheated during recharging.

   b. Once the battery reaches a certain threshold, the temperature continues to rise although recharging has stopped.

      (1) Smoke or a burning odor coming from the battery compartment identifies the condition.

      (2) As the temperature of the battery increases, its casing may bulge or buckle and the battery may catch on fire or explode.

   c. During a thermal runaway, a battery can become hot enough to burn through the mounting bracket and through the skin of the helicopter.

WARNING
DO NOT ATTEMPT TO DISCONNECT AND REMOVE THE BATTERY THAT IS IN THERMAL RUNAWAY.

   d. Ensure that the battery switches in the helicopter are turned off.

   e. Rescue crewmember may open the battery compartment, if able.

   f. If flames are present, use any extinguisher to attack fire.

   g. If smoke or fumes are present without flames, cool the battery with low velocity fog.

WARNING
CO_2 SHALL NOT BE DISCHARGED INTO THE BATTERY COMPARTMENT UNLESS VISIBLE FLAMES ARE PRESENT. THE STATIC ELECTRICITY GENERATED BY THE DISCHARGE COULD CAUSE A SPARK, IGNITING THE HYDROGEN AND OXYGEN GASES PRODUCED BY THE BATTERY.

3. Electrical Fire. In case of an electrical fire, the aircrew will attempt to extinguish the fire. The OSL should direct the rescue crew (fully suited up) to respond with additional CO_2 extinguishers, in case the helicopter crew cannot put out the fire.

K. JETTISONING THE HELICOPTER. If a helicopter fire cannot be brought under control, the helicopter may be jettisoned. This should be attempted only as a last resort when the safety of the cutter is in jeopardy. The recommended procedure for jettisoning the helicopter is for the cutter to initiate a high speed full-rudder turn, creating enough centrifugal force to roll the helicopter over the side.

WARNING
PERSONNEL ON THE FLIGHT DECK SHALL CLEAR THE AREA BEFORE INITIATING ANY ATTEMPT TO JETTISON THE HELICOPTER IN THIS MANNER.

CHAPTER 15. SPECIAL MISSIONS.

A. INTRODUCTION. FLICON FIVE was established to provide guidance for hoist operations and special mission training with flight deck equipped cutters. FLICON FIVE is appropriate for special missions training in isolation only. If other evolutions such as launch/recover, HIFR, or VERTREP are planned or anticipated, then the specific FLICON for that operation shall be accomplished. All crewmembers engaged in FLICON FIVE shall have a thorough understanding of the procedures addressed in this chapter. Crew coordination, communication, and preparedness are essential for the success of the mission.

B. IN THIS CHAPTER.

1. Cutter (Preparation).
2. Special Missions.
3. Emissions Control (EMCON) Operations.

C. CUTTER PREPARATION.

1. Overview. FLICON FIVE shall be set for hoist operations, and special mission, including vertical insertion (VI) and Aviation Use of Force (AUF) judgmental scenario training.
2. Special missions training scenarios are time critical and choreographed. Delaying execution once the asset is overhead will significantly reduce the training effectiveness. The cutter should prepare for helicopter operations sufficiently in advance to ensure readiness before arrival of the helicopter.
3. FLICON FIVE executed in isolation should reduce cutter workload. It is not intended for the preparations to be as extensive as those required for FLICON ONE.

NOTE

The intent of FLICON FIVE is to minimize the cutter personnel on deck, and clear the mission area of all personnel and equipment. If conducting special missions in conjunction with another aviation evolution, the only required alteration to the other flight condition is to remove personnel and equipment from the mission area.

NOTE

Special missions training is routinely conducted on patrol craft and other vessels lacking a flight deck, so equipment required for cutter certification is not required for FLICON FIVE.

NOTE

Desired cutter lighting configuration should be coordinated between the cutter, aviation Mission Commander, and ground forces commander to best suit the training scenario.

D. SPECIAL MISSIONS. This section is applicable to the following operations: VI (basic and tactical), AUF, and hoists other than VERTREP. FLICON FIVE shall be used for these missions.

1. FLICON FIVE shall be set upon notification from competent authority and SHALL be completed no later than 15 minutes prior to aircraft arrival.

2. Vertical Insertion may take place on any area of the ship; however, normally the flight deck will be used for the operation.

3. HCO SHALL complete FLICON FIVE checklist (Appendix H). All checklist items SHALL be reviewed even if they do not apply to the specific mission.

4. Cutter preparation for VI basic and tactical are identical. The main concern of the cutter and its crew is that when a VI tactical mission is being flown, the aircraft is going to enter flight conditions that will induce strong downdrafts and unusual attitude that could endanger personnel on or near the flight deck or other operational area.

5. VI missions may use the Fast Rope or the Harness Delivery Technique.

6. The H-60 aircraft is the primary aircraft for VI; a thorough familiarization is critical for weapons, ammo, and aircrew positioning.

7. At no time shall the fuel hose be allowed on deck during VI operations. If HIFR is anticipated, the rig SHALL be installed and tested prior to aircraft arriving on scene and brought up to the flight deck only when needed.

8. When conducting AUF operations, H-65/H-60 aircraft may be used. The aircraft may position on either side of the cutter while conducting live fire to the outboard of the aircraft. Cutters with Helicopter Interdiction Tactical Squadron (HITRON) Jacksonville AVDETS deployed SHALL plan for weekly live fire training.

WARNING

ALL PERSONNEL ARE RESTRICTED FROM BEING ON THE FLIGHT DECK OR ANY AREA AFFECTED WHILE VERTICAL INSERTION OPERATIONS ARE BEING CONDUCTED.

NOTE

Additional information may be obtained from the Aviation Special Missions, Tactics, Techniques, and Procedures Manual, COMDTINST M16601.20.

E. EMISSION CONTROL (EMCON) OPERATIONS. When use of radio communications is restricted because of the EMCON condition in effect, routine helicopter operations may be conducted by the use of abbreviated radio transmissions, the deck status light, and predetermined Identify Friend or Foe (IFF) codes. At no time shall any additional personnel such as sound powered phone talkers be stationed on the flight deck during helicopter operations.

NOTE

EMCON is not authorized during Level I operations. See Appendix C for EMCON Signals for when radio transmissions are not desired.

1. The Operations Officer shall be responsible for EMCON IAW appropriate directives. Detailed briefings covering mission responsibilities and procedures shall be conducted before operating under EMCON conditions. All flight crewmembers, ADCs, HCO, and the LSO shall attend such briefings and familiarize themselves with all procedures.
2. Both the controlling cutter and the helicopter shall guard the appropriate frequencies. Non-electronic communications procedures for performing launch, flight, arrival, and recovery operations shall be established in advance.
3. Emphasis shall be placed on short (no more than 5- to 7-second transmissions) to prevent positive identification via direction finding (DF) equipment. Frequencies should be changed routinely, especially VHF-FM frequencies. VHF-FM frequencies should be other than standard CG working frequencies, if possible.
4. Any time these procedures cause confusion or questions, normal voice procedures shall be used until all parties are satisfied of the other's intentions.
5. Launch Radio Checks: Under EMCON conditions, the Operations Officer with concurrence of the Senior Aviator and CO, may authorize launch of a helicopter with abbreviated two-way radio checks, if circumstances warrant and overall safety is maintained. Use the following procedures for abbreviated radio checks:
   a. Primary (1), Secondary (2), and Tertiary (3) frequency checks are completed preferably via secure communications ("IN THE GREEN") between the tower, aircraft, and control. Otherwise, radio checks are made via unsecure communications ("IN THE RED" or "IN THE CLEAR"). Tertiary checks on HF frequencies are completed when the aircraft is airborne.
   b. The following calls are made in the order listed below:
      (1) Helicopter: "ONE"
      (2) Tower: "ONE"
      (3) Control: "ONE"
      (4) Helicopter: "TWO"
      (5) Tower: "TWO"
      (6) Control: "TWO"
      (7) Helicopter: "THREE"
      (8) Control: "THREE"
   c. If any station does not answer, the helicopter should repeat the checks stating its call sign and the frequency that needs to be rechecked (i.e., "STINGRAY 13, ONE"). All stations should answer with their call sign and frequency number.

6. Passing the Numbers. The Tower should pass the numbers to the helicopter via messenger and grease pencil sheet following the preflight brief and prior to startup. If the numbers change, any changes should be passed via primary frequency UHF. Numbers passed to the helicopter prior to landing shall be done on UHF. Otherwise, radio checks are made via unsecure communications ("IN THE RED" or "IN THE CLEAR"), using short transmissions described above. Refueling requests should be made at this time.

7. Takeoff and Landing.

   a. Takeoff procedures are as follows:

      (1) Helicopter: “REQUEST TAKEOFF TO PORT/STARBOARD.”

      (2) Tower: “GREEN DECK.”

      (3) LSO and helicopter repeat: “GREEN DECK.”

   b. Landing procedures are as follows:

      (1) Helicopter call for numbers on UHF prior to landing: “REQUEST NUMBERS.”

      (2) Tower: “COURSE XXX, SPEED XX, PITCH X, ROLL X, LIST X, ALTIMETER XX.XX, RELATIVE WIND XXX AT XX.”

      (3) Helicopter repeats altimeter reading: “ALTIMETER XX.XX.”

      (4) Helicopter: “REQUEST LANDING” (include “to port” or “to starboard” for oblique approaches). Unless briefed otherwise, requests shall assume pedal turn to centerline (as applicable), primary tiedowns, and refuel as previously requested over UHF.

      (5) Tower: “GREEN DECK.”

      (6) LSO and Helicopter repeat: “GREEN DECK.”

8. Operations Normal Calls. The first operations normal consists of the aircraft wheels going up into the helicopter wheel wells, visually observed by the lookout, HCO, or LSO.

   Subsequent operations normal call should be transmitted by the helicopter via Transponder Mode 3 (four-digit) codes indicating the helicopter fuel state. The first digit of the four-digit code of an operations normal report is always the number one and the following three digits will specify fuel state in time to splash. For example, 2 + 15 fuel remaining to splash is indicated by a code of 1215. The helicopter shall transmit a new code every 15 minutes decreasing the fuel state. If a code is not transmitted within the specified time, control shall contact and direct the helicopter to “CHECK TRANSPONDER.”

9. Routine Communications. As with operations normal calls, communications from the helicopter to control should use the Transponder Mode 3 codes. A list shall be distributed by CIC to the helicopter during the preflight brief assigning specific meanings to each code sequence. The first digit in each code sequence will specify the subject and the following three digits will provide amplifying information.

If the cutter is not equipped with IFF capability, such as the WMEC 210, all routine communications shall be made via normal radio frequencies vice Transponder Mode 3 codes.

A frequency card which lists frequencies corresponding to color names shall be distributed by CIC to the helicopter. If a frequency is not working either secure or unsecure and another frequency needs to be passed, the initiating unit should state “SHIFT BLUE” or “SHIFT ORANGE,” etc., and follow on by initiating a radio check on that frequency, similar to the prelaunch radio checks (i.e., Helicopter: “ORANGE,” Control: “ORANGE”).

10. Mission Changes. Mission changes in the air or on deck should be communicated via Satellite Communications (SATCOM) or UHF. It is important to advise LSOs of mission changes on deck via VHF-FM or whatever means possible to avoid confusion.

GLOSSARY

Abort To prematurely terminate the maneuver or mission in progress, usually because to continue would abnormally hazard the aircraft or the cutter.

ACMS Asset Computerized Maintenance System

ADC Air Direction Controller

Administrative Control (ADCON) Direction or exercise of authority over subordinate or other organizations in respect to administrative matters, such as personnel management, supplies, services, and other matters not included in organizational missions of the subordinate or other organizations.

Aided Equipped with Night Vision Devices

Air Capable Ship All ships other than CV/CVN or LPH/LHA/LHD from which aircraft can take off, be recovered, or routinely receive and transfer logistic support.

ADF Automatic Direction Finder

Allowance Equipage List (AEL) A list that includes certain standard equipment required aboard cutters for flight operations.

AEL MK I Free Water Fuel Detector Kit

AEL MK III Contaminated Fuel Detector Kit

AFCS Automatic Flight Control System on H-65 Helicopters

AFR Air Force Regulation

AGL Above Ground Level

AIA Auto-Inflation Assembly

ALMIS Asset Logistics Management Information System

Approach The maneuvers performed and flight path followed to fly the helicopter from some point in space to a position over the deck where a landing can be accomplished. In general, an approach is considered to commence when the aircraft starts to descend from its last level flight altitude to the landing spot. The terms “180-degree approach,” “90-degree approach,” etc., indicate the number of degrees the aircraft must turn to reach the final approach course.

APU Auxiliary Power Unit

Aqueous Film Forming Foam (AFFF) The primary flight deck fire fighting agent.

ASIR Aviation Ship Installation Representative

ASIST Aircraft Ship Integrated Secure and Traverse

ASM Aviation Special Missions

ASR Air Surveillance Radar

ASW Antisubmarine Warfare

ATC Mobile Aviation Training Center (Mobile)

ATT Aviation Training Team

AUF Airborne Use of Force

AVDET Aviation Detachment

Aviation Night Vision Imaging System (ANVIS) Aviation night vision imaging system, associated with the intensifier device equipped with a minus blue filter (typically referring to AN/AVS-6 or AN/AVS-9 devices).

AWL Above Water Level

B/2 Fuel System Icing Inhibitor Test Kit Fuel test kit that contains a B/2 refractometer and equipment to measure the FSII content of the fuel.

Base Recovery Course The ships magnetic heading for aircraft recovery.

Bingo A term used by pilots to denote the point at which fuel becomes critical and return is imperative.

BMOW Boatswain's Mate of the Watch

Bonding The act of providing an electrical connection between two objects; i.e., aircraft and cutter, cutter and refueling truck.

BR Brake Rider

BRC Base Recovery Course

Buffer Distance The distance between the tip of the turning main rotor disk and the nearest fixed obstruction above a specified height, depending on the type of helicopter.

Carter Nozzle The fuel nozzle used for pressure fueling of aircraft.

CATCH Computer Approach to a Coupled Hover

CCR Closed-Circuit Refueling

Certified A cutter is certified as being materially ready for flight operations when it has passed required certification inspections.

Closed Circuit Refueling Nozzle (CCR) Pressure fueling nozzle used for helicopter in flight refueling operations.

CFD Contaminated Fuel Detector

Combat Information Center (CIC) A term used on all cutter classes except for WMEC 270 class cutters, which use "Combat Support Center (CSC)."

Combat Support Center (CSC) This term is used solely in connection with WMEC 270 class cutters, as opposed to the "CIC" aboard the other cutter classes.

CICO Combat Information Center Officer

CINC Commander in Chief (Navy)

CIWS Close-In Weapons System

Clear and Bright A visual inspection of aviation fuel. Clear refers to clean fuel with no visible contamination or moisture. Bright refers to the fluorescent appearance of fuel that has no cloud or haze.

Clear Deck The condition that exists when the flight deck is free of obstacles and a helicopter landing is possible. This situation does not reflect the manning of flight quarters, and may exist when the cutter is not in complete readiness.

Clearance An authorization, given visually and/or verbally to the pilot, that an intended maneuver may be accomplished after ensuring that no known circumstance or situation will imperil the aircraft, other aircraft, the cutter, or personnel.

CO Commanding Officer

Coalescer A two-stage JP-5 filter/separator.

Coarse and Fine Solid particles sometimes found in fuels that are larger than and smaller than 10 microns respectively. Generally, coarse particles can be seen with the naked eye. Fine particles, if in sufficient amounts, appear as haze or cloudiness in fuel.

Combined Contaminated Fuel Detector (CCFD) A device consisting of the MK I Freewater Detector (FWD) and MK III Contaminated Fuel Detector (CFD) used to test fuel for both water and particulate contamination.

Compressor Stall Loss of turbine engine power commonly associated with FOD and/or encrustation due to extended exposure to salt spray.

Composite Materials Strong, lightweight materials, usually reinforced with glass, carbon/graphite, or boron/tungsten fibers. These are used in lieu of heavier aluminum or metallic materials in the construction of modern aircraft.

Contaminated Fuel Detector (CFD) (MK III) A device that tests aviation fuel for particulate contamination.

Control Zone A circular airspace with a radius of 5 nm around the ship that extends upward from mean sea level (MSL) to, and includes, 2,500 feet.

CONUS Continental United States

CPO Chief Petty Officer

Crash Kit The tool kit required for aircraft entry in the event of a crash.

CSC Combat Support Center

CSCO Combat Support Center Officer

D-1 Single Point Refueling (SPR) nozzle with a 45-degree elbow.

D-1A Single Point Refueling (SPR) nozzle with a 45-degree elbow and a hose end pressure regulator.

Day or Daytime The time between sunrise and sunset.

DDHA A mnemonic device that outlines how traffic advisories shall be passed. DDHA is: D for Direction of the air traffic from the controlled aircraft; D for Distance of the air traffic from the controlled aircraft in nautical miles; H for cardinal Heading of the air traffic; and A for Altitude of the air traffic.

Deck Status Light A visual landing aid that indicates whether the helicopter is cleared to land, takeoff, start engines, and engage/disengage rotors, VERTREP or HIFR.

Delta Pattern A racetrack-shaped holding pattern used to conserve fuel while delaying the arrival of the aircraft.

Deployment The placement of a helicopter detachment on board a cutter in support of the ship's general missions. Operational control (OPCON) and/or administrative control (ADCON) of a deployed detachment normally shifts to the cutter.

Detachment One or more helicopters, with associated personnel, embarked or deployed aboard a cutter.

DF Direction Finder

DI Dynamic Interface

DiEGME DiEthylene Glycol Monomethyl Ether: Fuel System Icing Inhibitor (FSII) used in military aviation turbine fuels.

Distance Measuring Equipment (DME) Equipment installed with tactical air navigation (TACAN) sets, or separately, which provides visual indication of slant range from a TACAN or distance measuring equipment (DME) transmitter.

DLQ Deck Landing Qualification

DoD Department of Defense

DR Dead Reckoning

Dry Fuel Fuel that contains no water

Dynamic Rollover Dynamic rollover is the rolling motion of the helicopter fuselage around one wheel that has been effectively stopped from moving sideways. Factors that can contribute to its onset include flight deck motion, list, crosswind, wheel obstructions, lateral center of gravity (CG) displacement, main rotor thrust, and tail rotor thrust.

EAL Electronic Asset Logbook

Eductor A manual proportioning device with a pickup tube mounted in-line between a salt water fire main outlet and a fire hose, which provides aqueous film forming foam (AFFF) for fire fighting when the pickup tube is inserted into a can of AFFF.

ELVA Emergency Low-Visibility Approach

Embarkation The placement of a helicopter detachment on board a cutter for a specific mission or missions. Tactical control shifts to the cutter. OPCON and ADCON of an embarked detachment normally stay with the aircraft's home unit.

Emergency As used in this Manual, a situation or condition that can reasonably be expected to result in the loss of life, acute physical pain, or ditching of the aircraft.

Emergency Low-Visibility Approach (ELVA) An emergency instrument approach procedure to the ship designed to bring the helicopter into position for a safe landing.

Emission Control (EMCON) The securing of all electromagnetic radiating equipment to avoid detection. Cutters frequently employ partial EMCON by minimizing radio communications.

Engage Rotor The positioning of appropriate controls to allow the rotor system to commence rotation with power supplied by the helicopter engine(s).

ETA Estimated Time of Arrival

ETR Estimated Time of Recovery

FAF Final Approach Fix

FDD Flight Deck Director

FDVS Flight Deck Video System

FOD Foreign Object Debris or Damage

FLICON ONE Flight Quarters Condition One

FLICON TWO Flight Quarters Condition Two

FLICON THREE Flight Quarters Condition Three

FLICON FOUR Flight Quarters Condition Four

FLICON FIVE Flight Quarters Condition Five

Flight Deck Video System (FDVS) A system used to monitor flight deck operations from the Helicopter Control Officer (HCO) station on the bridge. FDVS remote monitors may also be installed in the combat information center or other locations.

Flush The operation of pumping JP-5 fuel through the JP-5 fuel hose and fueling nozzle with fuel pumped from the service tank, through the service filter/separator, then the GO-NO-GO monitor, then the hose/fueling nozzle, and then returning to a storage tank via the fill connector using the service pump.

Foreign Object Damage/ Debris (FOD) Normally used to describe any loose material that may be ingested into the engine or rotor blades, possibly causing damage to the helicopter and/or injury to personnel.

Foul Deck The condition that exists when a landing cannot be made because of obstacles or restrictions on the flight deck.

Free Water Standard A color intensity comparator standard used in the Free Water Detector (FWD) for determining the free water content in aviation fuel.

FSII A fuel additive that prevents formation of water ice and microbiological growth in the fuel.

FWD Free Water Detector (MK I: A device that measures the free water content of a fuel sample.

Gammon Fitting A common (trade) name applied to the jet test QD (quick disconnect) couplings used in refueling nozzles and other places to take fuel samples.

GO-NO-GO Fuel Monitor A canister containing several filter elements that is designed to remove both water and particulate contamination from fuel.

GO-NO-GO Fuse A filter element for the JP-5 GO-NO-GO monitor designed to prevent the passage of water and particulate contamination into the helicopter fuel system.

GPM Gallons Per Minute

GPS Global Positioning System

Grounding The act of providing an electrical connection between an object (e.g., aircraft and the ground (earth).

Ground Resonance A condition of geometric imbalance in helicopters caused by offset dynamic forces when the helicopter makes contact with the deck. If allowed to continue, destruction of the helicopter is imminent. Improper use of tiedowns can cause ground resonance.

HALON An electrically non-conductive gas used primarily in fighting Class B and C fires.

HCO Helicopter Control Officer

HCS Helicopter Control Station

Heavy Weather Tiedowns Installed whenever excessive wind and/or motion is anticipated. This consists of the installation of additional secondary tiedowns.

Helicopter Control Officer (HCO) The individual responsible for overall management of shipboard helicopter evolutions.

Helicopter Control Station (HCS) A shipboard aircraft control tower, or, on ships not equipped with a control tower, the communications installation that serves as such.

Helicopter In-Flight Refueling (HIFR) The procedure used to refuel helicopters while in a hover alongside the cutter.

HF High Frequency

HF-SSB High Frequency Single Side Band

HIFR Rig A fueling rig which enables airborne (HIFR) fueling of most U.S. military helicopters. It consists of a short length of fuel hose with an attached metal saddle for hoisting and quick disconnect fittings for attachment to the fuel hose and helicopter.

HITRON Helicopter Interdiction Tactical Squadron

HOSTAC Helicopter Operations From Ships Other Than Aircraft Carriers

Hover A condition in flight in which all relative or actual movement has ceased.

HPS A mnemonic device for an aircraft checkout list. HPS is H for Heading, P for Pigeons, and S for State.

HS Health Services Technician

HSK Helicopter Support Kit

HUD Heads Up Display

IAF Initial Approach Fix

IAP Instrument Approach Procedures

IAS-VS Indicated Air Speed — Vertical Speed

ICAO International Civil Aviation Organization

IFF Identification Friend or Foe

Illuminance The scientific name for the measurement of incident light. The unit of measurement is commonly the "footcandle" (lumens per square foot) in the English system and the "lux" (lumens per square meter) or "dekalux" (lux times 10) in the metric system. It is a photometric term that quantifies light incident on a surface or plane.

IMC Instrument Meteorological Conditions

Instrument Approach An aircraft procedure that uses any combination of self-contained, land-based, or shipboard navigation and communication facilities to accomplish a safe instrument based descent to a point from which a visual landing can be made.

Instrument Flight Rules (IFR) Flight rules established to facilitate safe navigation and separation of aircraft during instrument meteorological conditions (IMC).

Instrument Meteorological Conditions (IMC) Meteorological conditions, expressed in terms of visibility, distance from clouds, and ceiling, during which constant reference to aircraft instruments is essential to maintain safe flight.

IP Instructor Pilot

ITO Instrument Takeoff

JMCIS Joint Maritime Command Information Exchange

JP-5 Discussion of JP-5 fuel within the text of this manual shall pertain specifically to fuel used for the purpose of aviation fuel unless otherwise noted.

JOTS Joint Operational Tactical System

LINT A mnemonic device for listing emergency information. LINT is L for Location, I for Intention, N for Needs, and T for Tell.

LE Law Enforcement

LOI Letter of Intent

Landing Signal Officer (LSO) The individual directly responsible for preparation and supervision of the flight deck during all flight operations.

Launch The complete sequence of events starting when flight quarters is set and ending when the helicopter is airborne and clear of the cutter.

Lift Off To take off or leave the deck in a controlled condition of flight.

LUX The metric unit of measure for illuminance of a surface. The amount of light provided by an ordinary wax candle on a spherical surface with an area equal to one square meter one meter away from the flame.One lux is equal to:

- one lumen per square meter
- 0.093 foot-candles

MAB Mishap Analysis Board

Manned After a specific FLICON is set all personnel are at their required stations.

MAP Missed Approach Point

MATCH Manual Approach to a Coupled Hover

MDL Maintenance Due List

Missed Approach Point (MAP) In an instrument approach procedure, the missed approach point (MAP) is the point along the final approach course where missed approach procedures are initiated if the cutter or water surface is not in sight.

MOA Memorandum of Agreement

MOGAS Automotive gasoline

MOU Memorandum of Understanding

MPC Maintenance Procedure Card

MSL Mean Sea Level

NATCH NVG Aided Approach To a Controlled Hover

NATO North Atlantic Treaty Organization

NATOPS Naval Air Training and Operational Procedures Standardization

NAVAIR Naval Air Systems Command

NAVAIRWARCENACDIVLKE Naval Air Warfare Center, Aircraft Division Lakehurst

NHC NATO High Capacity helicopter in flight refueling rig

NICAD Nickel Cadmium battery

Night or Nighttime The time between sunset and sunrise.

Night Vision Device Any device (NVG, FLIR, etc.) that aids an individual's vision at night.

Night Vision Goggles An image intensification system worn by an individual in order to enhance or improve vision at night.

Non-precision Approach Radar-controlled approach or an approach flown by reference to navigation aids in which glide slope information is not available.

NSC National Security Cutter

NSN National Stock Number

NSO Night Vision Goggle Safety Observer

NSTM Naval Ships Technical Manual

NVD Compatible Lighting system which are only required for the unaided operator and shall have no adverse effect on the operator equipped with ANVIS devices. System is virtually invisible to the ANVIS devices.

NVD Compliant Components that are NVD compatible, NVD shipboard friendly, and noncompatible systems which are dimmed, baffled or hidden from direct line of sight of the aided operator. An NVD compliant ship consisting of this lighting discipline can be used for aided and unaided operations.

NVD Shipboard Friendly Lighting systems which are required to be seen by both aided and unaided operators simultaneously and/or independently. Has spectral energy emitted in a controlled fashion to allow direct aided view/recognition without impacting the devices to the point that critical visual cues are washed out or obscured.

NVD Shipboard Covert Only required to be seen by the aided operator and cannot be detected by the unaided observer.

NVG Night Vision Goggles

NWC-2, NWC-3, NWC-4 Designations for wheel chocks used with U. S. Navy helicopters during flight quarters.

NWP Naval Warfare Publication

OBA Oxygen Breathing Apparatus

On-Scene Leader (OSL) The individual in charge of the flight deck fire party and rescue crew during flight quarters. The OSL takes charge of all flight deck personnel after a helo crash on deck.

OOD Officer of the Deck

OPAREA Operating Area

OPCON Operational Control

Operational Control (OPCON) The authority delegated to a commander to direct forces assigned so that the commander may accomplish specific missions or tasks that are usually limited by function, time, or location; to deploy units concerned, and to retain or assign tactical control of these units. It does not include authority to assign separate employment of components of the units concerned. Neither does it, of itself, include administrative or logistic control.

Ordnance Any material or equipment carried by an aircraft that may cook off/explode strictly due to temperature during a fire.

OS Operations Specialist

Overhaul The final phase of fire fighting, during which all of the fire is searched out and extinguished, or the process of preparing tiedown straps and chains for an aircraft tiedown evolution.

PA Physician Assistant

PAC Pilot at Controls

PATCH Precision Approach to a Coupled Hover

Pelican Hook The metal mechanism on the aircraft end of the high tiedown strap.

Phone Talker A term used for the person charged with establishing and maintaining communications with other flight operations stations via approved communications devices (SPP's, radios, 1MC, etc.).

PIC Pilot in Command

PLANET An acronym that corresponds to initial communication at aircraft check-in. PLANET is: P for Pilot reports souls onboard and fuel state; L for Location of the aircraft relative to the ship; A for Altimeter setting; N for No communications; E for Execute and expect; and T for Tell.

PPE Personal Protective Equipment

PPM Parts Per Million

PMS Preventive Maintenance System

POB Persons onboard

PQS Personnel Qualification Standards

Pressure Altitude The indicated altitude of a pressure altimeter at an altimeter setting of 29.92 inches of mercury.

Pressure Refueling The process of refueling an aircraft using a single point fueling nozzle which provides a closed attachment, preventing fumes from escaping and fuel from spilling.

Primary Tiedowns A nylon strap device equipped with quick release fittings used for initial and/or temporary securing of the helicopter to the deck. By design and use, there are two types of primary tiedowns: high and low.

Proportioner A motor-driven, pressure-balanced source of AFFF for fire fighting.

PSIG Pounds per Square Inch, Gauged

Purple K Powder (PKP) A dry chemical intended for use on Class B fires.

Qualified A cutter is qualified to conduct flight operations when the following conditions exist: the cutter has accomplished required training, and the cutter has the required number of qualified personnel. Cutter personnel are qualified when they have met the minimum training requirement for their individual flight quarter's billet. Aircrew (pilots) are qualified when they have met the minimum training requirements for shipboard landings and other procedures.

RAST Recovery Assist Secure and Traverse (a Navy tiedown system)

Reach Pendant A reach pendant is a nonconductive synthetic rope assembly with an attached stiffened tube and a loop on each end used during VERTREP operations for connecting a load to a helicopter cargo hook. When a nonconductive reach pendant is used, a static discharge wand is not required.

Ready The next step after MANNED. All personnel have completed their required equipment tests, are properly dressed out, and are ready to conduct the evolution.

Recirculation The operation of pumping JP-5 fuel from a tank through a filter/separator then returning to the same tank without being pumped through the GO-NO-GO filters or fuel hose.

Recovery The complete sequence of events starting when flight quarters is set and ending when the helicopter has landed and been secured on deck.

RF Radio Frequency

RPM Revolutions Per Minute

SAR Search and Rescue

SATCOM Satellite Communication

SCBA Self-Contained Breathing Apparatus

Secondary Tiedowns A chain-type device equipped with quick release turnbuckles used to secure the helicopter to the deck, when deck motion or length of stay requires greater security than that afforded by primary tiedowns.

Semiannual Calendar Period The time frame used in conjunction with aviation and cutter crew currency requirements. There are two semiannual periods: 1 January through 30 June, and 1 July through 31 December.

Service Fuel (JP-5) A term used within the context of this manual for JP-5 fuel in a JP-5 service tank that has been filtered to acceptable dispensing limits and is ready to be dispensed to aircraft.

Service Tank (JP-5) A tank discussed within the context of this manual designated to be filled only with JP-5 fuel that has been filtered to acceptable aircraft fuel dispensing limits.

Ship/Helo Instructor An officer assigned to the Ship/Helicopter Training Branch at Coast Guard Aviation Training Center, Mobile, AL. Ship/Helo Instructors conduct training in all flight operations and issue flight operations qualifications to all Coast Guard cutters. In addition, they are authorized to issue aviation facilities certification to cutters not falling under the U.S. Navy certification program.

SLAP Solar Lunar Almanac Program (NVG Ops)

SOP Standard Operating Procedure

SOPA Senior Officer Present Afloat

Squawk An aircraft's transponder transmission, which can be tracked on ship's radar.

Stabilized Glide Slope Indicator (SGSI) A visual landing aid (VLA) that provides the pilot with a visual approach angle (glide slope) to arrive at a safe position for landing.

Steady Carrier A continuous radio signal of specific frequency.

Stripping The process of removing water and other contaminants from fuel.

Tactical Air Navigation (TACAN) An electronic navigation aid capable of providing a visual presentation of both azimuth and distance (DME) information.

Tactical Control (TACON) The detailed, and usually, local direction and control of movements or maneuvers necessary to accomplish missions or tasks assigned.

TALON A helicopter decklock (tiedown) system. The system consists of a grid (with no moving parts) installed in the cutter's flight deck, and a hydraulic probe attached to the bottom of the helicopter, which is activated by the pilot to secure the helicopter to the grid.

TD-1A Designation for tiedown chain assemblies used for securing helicopters to the flight and hangar decks. They are used for secondary tiedown of H-65 helicopters, and for primary and secondary tiedown for all other helicopters.

Touch and Go A landing followed by a takeoff, executed as a continuous maneuver. The aircraft may remain briefly on the deck, with no change in configuration, but is not tied down.

Transient The placement of a helicopter on board a cutter for a short duration and for a specific purpose such as refueling, training, logistics, etc.

UHF Ultra High Frequency

Unaided Operator not equipped with ANVIS devices, but using natural vision.

Vari-nozzle A fire fighting nozzle that provides a variable spray pattern.

VDEL Vertical Delivery

Vertical Replenishment (VERTREP) The transfer of personnel or cargo between a cutter and a helicopter by methods other than landing; such methods include external cargo sling and hoist.

VHF Very High Frequency

VHF-AM Very High Frequency-Amplitude Modulation

VHF-FM Very High Frequency-Frequency Modulation

VI Vertical Insertion

Visual Flight Rules (VFR) Flight rules established to facilitate the safe navigation and separation of aircraft during periods of good visibility.

Visual Landing Aids (VLA) All shipboard lighting and markings designed to provide visual information to assist the pilot in making a safe approach and landing.

Visual Meteorological Conditions (VMC) Meteorological conditions expressed in terms of visibility, distance from clouds, and ceiling, during which safe flight of an aircraft is possible using outside visual references.

VOR Very High Frequency Omnidirectional Range Station

WAGB Coast Guard Polar Class Icebreaker

WHEC Coast Guard High Endurance Cutter

WMEC Coast Guard Medium Endurance Cutter

WMSL Coast Guard Maritime Security Cutter, Large

WMSM Coast Guard Maritime Security Cutter, Medium

APPENDIX A. Shipboard-Helicopter Certification, Qualification, and Standardization Program

A. INTRODUCTION. This appendix provides information on the U.S. Coast Guard's Shipboard-Helicopter Certification, Qualification, and Standardization Program.

B. IN THIS APPENDIX. This appendix discusses the following topics:

1. Certification
2. Qualification
3. Standardization and Requalification
4. Orientation

C. CERTIFICATION.

1. The primary objective of the shipboard aviation facility certification process is to validate by inspection the facilities, equipment, and their operating capabilities for proper, adequate, and safe conduct of flight operations. All Coast Guard aviation capable ships shall have certified aviation facilities with certified aircraft operating envelopes. This requirement applies to both manned and unmanned aviation assets.
2. Authority.
   a. CO, Naval Air Warfare Center, Aircraft Division Lakehurst (NAVAIRWARCENACDIVLKE). CO, Naval Air Warfare Center, Aircraft Division (NAVAIRWARCENACDIVLKE), is responsible for certifying the aviation facilities of WAGB 420 (CGC HEALY), WHEC 378, WMEC 282 (CGC ALEX HALEY), WMEC 270, WMSL 418, and WMEC 210 cutters. NAVAIRWARCENACDIVLKE certification is inclusive for all applicable Coast Guard and Department of Defense helicopters. Navy certification inspections are conducted by Navy Aviation Ship Installation Representatives (ASIR).
   b. CO, Aviation Training Center Mobile. CO, Aviation Training Center (ATC) Mobile, is responsible for certifying the aviation facilities of WAGB 399 cutters. ATC Mobile certification applies only to operations with Coast Guard helicopters. ATC Mobile certification inspections are conducted by Ship-Helo Instructors.

NOTE

The certification of a ship's aviation capability does not constitute authorization to conduct air operations. Authorization to conduct air operations on Coast Guard cutters is the responsibility of Coast Guard Office of Aviation Forces, Commandant (CG-711).

NOTE

Commandant (CG-711) may grant an operational waiver to aviation facility certification to meet specific Coast Guard needs. Such waivers shall be granted a specified period of time, shall not abrogate safety, and applies to Coast Guard operations only.

3. Certification Visits. Certification visits are scheduled through the appropriate area commander, and are requested during the preceding quarter.

   a. Pre-Certification Technical Assistance. If desired, a precertification technical assistance (tech-assist) visit may be requested, via the chain of command, and should be scheduled at least 4 weeks in advance of the certification.

   b. Certification Inspections. Aviation facility and SGSI certifications are granted separately by NAVAIRWARCENACDIVLKE. Certification and tech-assist visits may be requested from NAVAIRWARCENACDIVLKE separately for the aviation facility, NVG flight deck facility, or the SGSI by the appropriate Area Commander.

   c. Navy Certification Inspection Length. Aviation facility certification lasts approximately 4 days and Navy SGSI certification requires 2 days.

   d. Coast Guard Certifications. Coast Guard certifications of the WAGB 399 cutters and certification reviews are normally accomplished in three days in conjunction with a standardization training visit (see Paragraph A.E. of this appendix). Coast Guard certifications for NVG flight deck facilities are usually accomplished in 1 day.

4. Certification Checklist.

   a. NAVAIRWARCENACDIVLKE Air Capable Ship Aviation Facilities Certification Requirements Document (Generic), NAVAIRWARCENACDIVLKE-AWS-91-859, is the checklist used by Navy inspectors.

   b. The Coast Guard Cutter Aviation Facilities Certification Review Checklist is an abbreviated version of NAVAIRWARCENACDIVLKE-AWS91-859, and is used by ATC Mobile Ship-Helo Instructors.

   c. Copies can be obtained by contacting the appropriate agency.

D. QUALIFICATION.

1. Authority. CO, ATC Mobile is responsible for initial qualification of cutters for helicopter operations. These visits are conducted by the ATC Mobile Ship-Helo Branch and require approximately four days to complete. They are scheduled through the appropriate area commander and should be requested 2 to 3 months in advance.

2. Qualification Requirements. In order to become qualified, cutters shall complete the following requirements.

NOTE

A Ship-Helo instructor may elect to reduce the minimum number of evolutions required during a qualification visit, based solely on their judgment of ATT effectiveness and cutter crew competency. As an absolute minimum, sufficient evolutions shall be conducted to allow LSO and tiedown crewmembers to complete requalification requirements (see Table 3-2 and Table 3-3).

a. Launch and Recovery. Initial qualification requires 40 day, 20 night and 16 NVG landings. Days shall be completed before night, and nights shall be completed before NVG landings.

b. OnDeck Refueling.

(1) Static Refueling: A minimum of one static refueling evolution is required.

(2) Hot Refueling: A minimum of one hot refueling evolution is required.

c. Helicopter Control. The following are helicopter control qualification requirements:

(1) IMC (Level I) Qualification.

(a) Provide flight following and positive radar control during a simulated patrol, including traffic advisories or separation (lateral and vertical), heading and altitude instructions, and clearance for instrument approaches.

(b) Complete at least one radar approach or one emergency low-visibility approach (ELVA).

NOTE

The ELVA Qualification sortie shall be conducted in VMC.

(2) VMC (Level II or III) Qualification. Provide flight following and advisory controls during a simulated patrol mission.

d. HIFR (Class 6 and 6R Operations).

(1) Day HIFR. A minimum of one day HIFR

(2) Nighttime HIFR. A minimum of one nighttime HIFR is required

e. Crash on Deck Drill. A minimum of two crash ondeck drills are required.

f. VERTREP. A minimum of one VERTREP evolution is required.

E. STANDARDIZATION AND REQUALIFICATION.

1. Standardization Unit. ATC Mobile Ship-Helo Branch is responsible for maintaining fleet-wide standardization and requalification in shipboard-helicopter operations. Standardization and requalification visits, in conjunction with certification and certification reviews, are normally accomplished in 3 days; 2 days in port pier side, and 1 day underway. They

are scheduled through the appropriate Area Commander and should be requested 2 to 3 months in advance. Standardization qualification is valid for 2 years and expires on the last day of the 24th month.

2. Standardization Requirements. Cutter personnel and the cutter ATT shall demonstrate an adequate level of proficiency in the following areas.

NOTE

A Ship-Helo instructor may elect to reduce the minimum number of evolutions desired during a requalification visit, based solely on their judgment of ATT effectiveness and cutter crew competency.

   a. LSO and Tiedown Team Evaluation. The cutter ATT shall demonstrate an adequate level of proficiency evaluating the LSO and tiedown team conducting daytime and nighttime evolutions. Normally, enough evolutions will be conducted to allow at least two LSOs and tiedown teams to complete their semiannual recurrent minimums.

   b. Ondeck Refueling Evaluation. The cutter ATT shall demonstrate an adequate level of proficiency in evaluating fueling party members conducting:

      (1) Static pressure refueling

      (2) Hot refueling

3. Helicopter Control Evaluation. The following are helicopter control standardization and requalification requirements. The cutter ATT shall demonstrate an adequate level of proficiency in evaluating CIC flight followers and ADC personnel conducting flight following, providing radar vectors, separating aircraft, and issuing clearances for instrument approaches.

   a. IMC (Level 1) Qualification Evaluation.

      (1) Provide flight following and positive radar control during a simulated or actual mission, including traffic advisories or separation (lateral and vertical), heading and altitude instructions, and issue clearance for an instrument approach.

      (2) Complete at least one radar approach or one emergency low-visibility approach (ELVA).

NOTE

The ELVA Qualification sortie shall be conducted in VMC.

   b. VMC (Level II/III) Qualification Evaluation. Provide flight following and advisory controls during a simulated patrol mission.

4. HIFR (Class 6 and 6R Operations) Evaluation. The cutter ATT shall demonstrate an adequate level of proficiency in evaluating fueling party personnel performing day or night HIFR.

5. Crash on Deck Drill Evaluation. The cutter shall perform a minimum of two crash on deck drills during the visit. The ATT shall demonstrate an adequate level of proficiency in evaluating a minimum of one crash on deck drill.

6. VERTREP Evaluation. A minimum of one VERTREP evolution is required.

7. Written Exam. A written exam SHALL be given to ALL personnel assigned to an aviation operation billet. A passing score of 70% is required to maintain qualification.

F. ORIENTATION.

1. Overview. Before conducting operations with a model of helicopter unfamiliar to the crew, cutters shall complete the following requirements:

   a. Conduct a certification review, to include waiver messages issued by Commandant (CG-711) when applicable, to ensure that the cutter is certified to operate with the specific model of helicopter.

   b. Conduct a review/briefing of helicopter characteristics and procedures, including the following:

      (1) Landing gear configuration.

      (2) Correct approach angle and landing position.

      (3) Minimum clearances.

      (4) Tiedown requirements and procedures.

      (5) Fire fighting, crash, and rescue procedures.

      (6) Fueling requirements and procedures.

      (7) Communications equipment and procedures.

      (8) HIFR and/or VERTREP equipment and procedures.

      (9) Pitch, roll, and relative wind limitations.

      (10) Helicopter danger zones.

CAUTION

CUTTERS ARE AUTHORIZED TO CONDUCT OPERATIONS WITH ONLY THE HELICOPTERS THAT THEY ARE CERTIFIED. OPERATIONS WITH OTHER HELICOPTERS ARE PROHIBITED, UNLESS SPECIFICALLY AUTHORIZED BY COMMANDANT (CG-711).

2. Static Helicopter Familiarization Training. If feasible, conduct static helicopter familiarization training before commencing operations. This includes the fueling detail, location of grounding and fueling points, fueling procedures, hazards, etc. The following crewmembers need the stated specific training:

   a. Engine start fire guard: fire guard position, potential fire locations, proper procedures, safety precautions, etc.

   b. Fire party: emergency access, fuel shutoff, electrical switches, battery compartment, fire hazards, etc.

   c. Rescue boat crew: emergency access, flotation system and activation procedure, fuel shutoff, electrical switches, battery compartment, fire hazards, etc.

APPENDIX B. Relative Wind and Ship Motion Envelopes for Shipboard-Helicopter Operations

A. INTRODUCTION. This appendix describes the flight deck motion and relative wind envelopes authorized for operations involving specific combinations of Coast Guard and Navy helicopters and cutters. For combinations other than those specifically addressed in this appendix, the general launch and recovery imitations shown in Figure B-1 apply. Envelopes for specific Coast Guard helicopter and naval vessel and Navy helicopter and cutter combinations are also depicted in Annex B to NAVAIR 00-80T-122.

B. WIND AND SHIP MOTION.

1. Flight Deck Motion and Limits.

   a. Flight deck motion aboard Coast Guard cutters is characterized by rapid pitch and roll excursions regardless of sea conditions. When current pitch and roll are reported to an inbound helicopter, the report shall convey the maximum pitch and roll and any excursions that may exist. The roll SHALL be reported as the maximum reading from the ship's vertical. The list, if any, SHALL be reported as an advisory.

   b. Pilots may land aboard a Coast Guard cutter when the flight deck is within established limits but experiencing occasional excursions beyond limits. For the purpose of interpreting pitch and roll limits, "occasional" shall be defined as a span of time sufficient for a pilot to safely execute an approach and landing within the period between excursions.

NOTE

TALON shall be used when excursions are above general limits when landing to Talon equipped cutters.

NOTE

Occasional excursions of pitch and roll limits is prohibited on Legend Class cutters without use of rapid securing device.

   c. During gusty wind conditions and/or pitching decks, if the gust spread is 10 knots or more, reduce the maximum winds allowed for rotor engagement and disengagement by 10 knots in all quadrants.

2. Pitch and Roll Limits at Night.

   a. Occasional excursions of pitch and roll limits at night are prohibited. At night, in addition to greatly reduced visual cues, oncoming waves cannot be seen, making it impossible to time landings. Additionally, unlike day landings, the cutter is the only visual reference for this visual maneuver. When the cutter moves excessively during rough conditions, it can easily induce vertigo and place the aircrew in extreme danger.

   b. Unless specifically stated otherwise, night and NVG launch and recovery limits are identical.

C. IN THIS APPENDIX. This appendix contains launch are recovery limits for the H-60 and H-65.

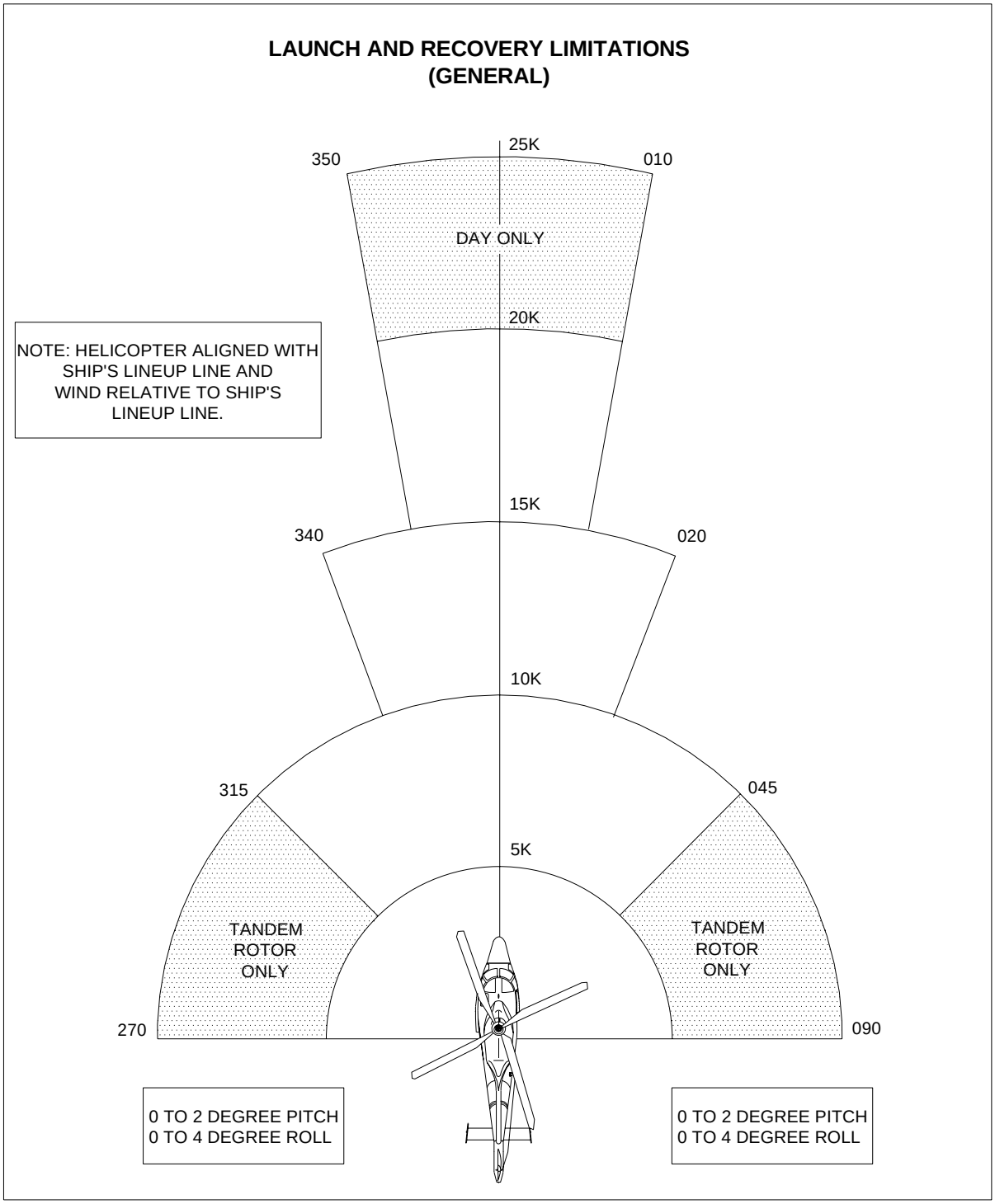

cg9100086a

Figure B-1. Launch and Recovery Limitations (General)

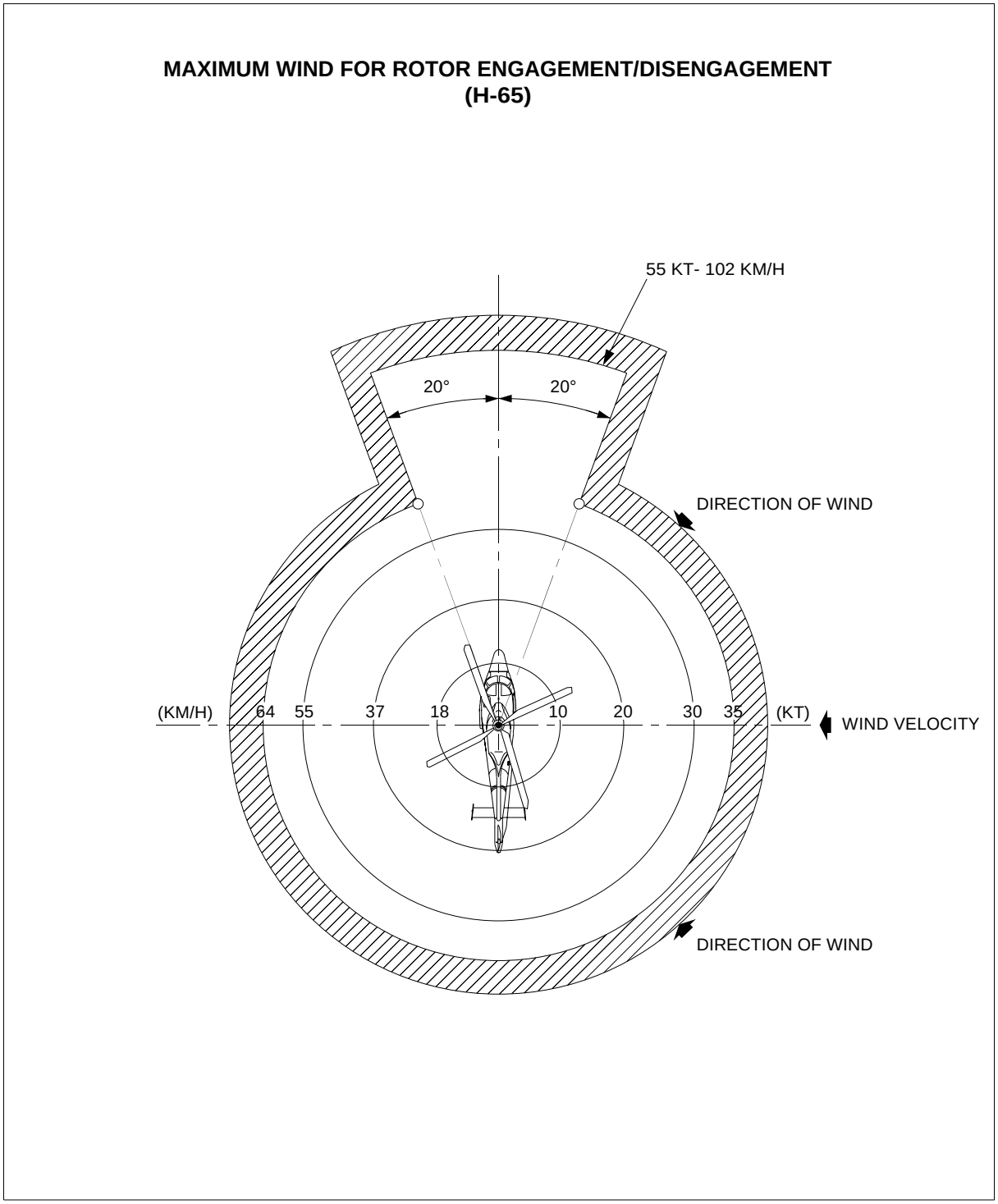

cg9100101a

Figure B-2. Maximum Wind for Rotor Engagement (H-65)

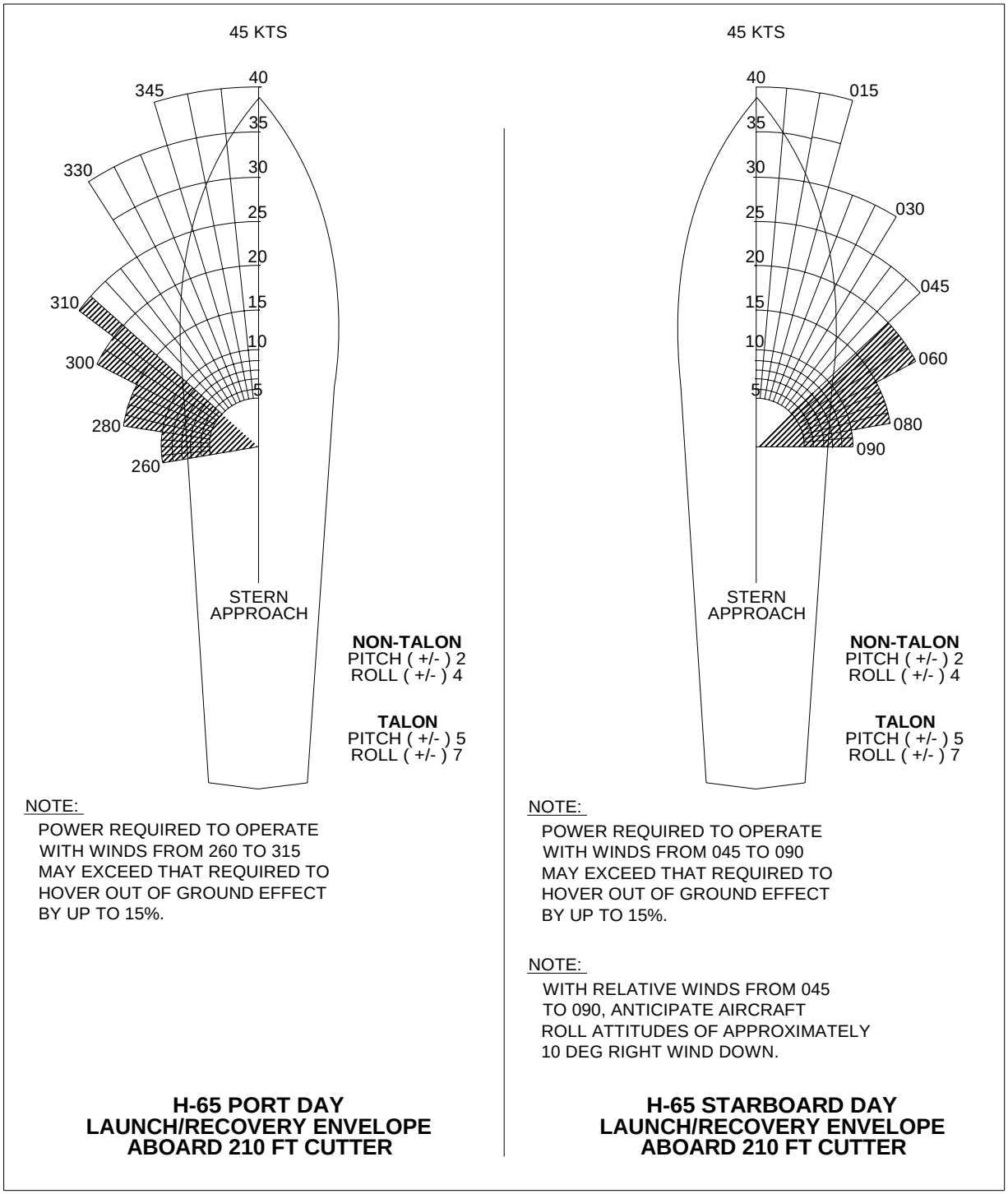

cg9100162a

Figure B-3. H-65 Day L/R Envelope Aboard the WMEC 210 ft Cutters

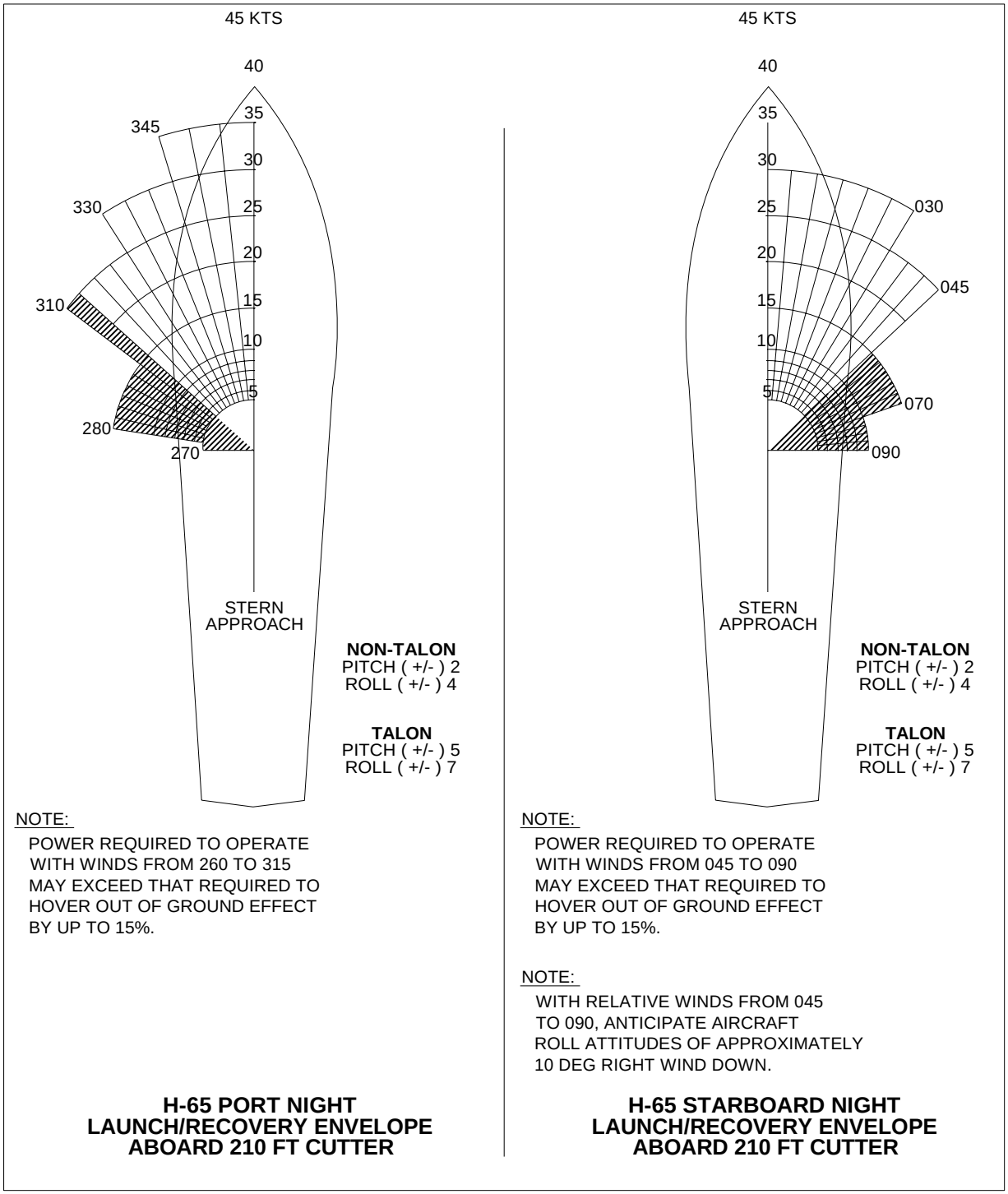

cg9100163a

Figure B-4. H-65 Night L/R Envelope Aboard the WMEC 210 ft Cutters

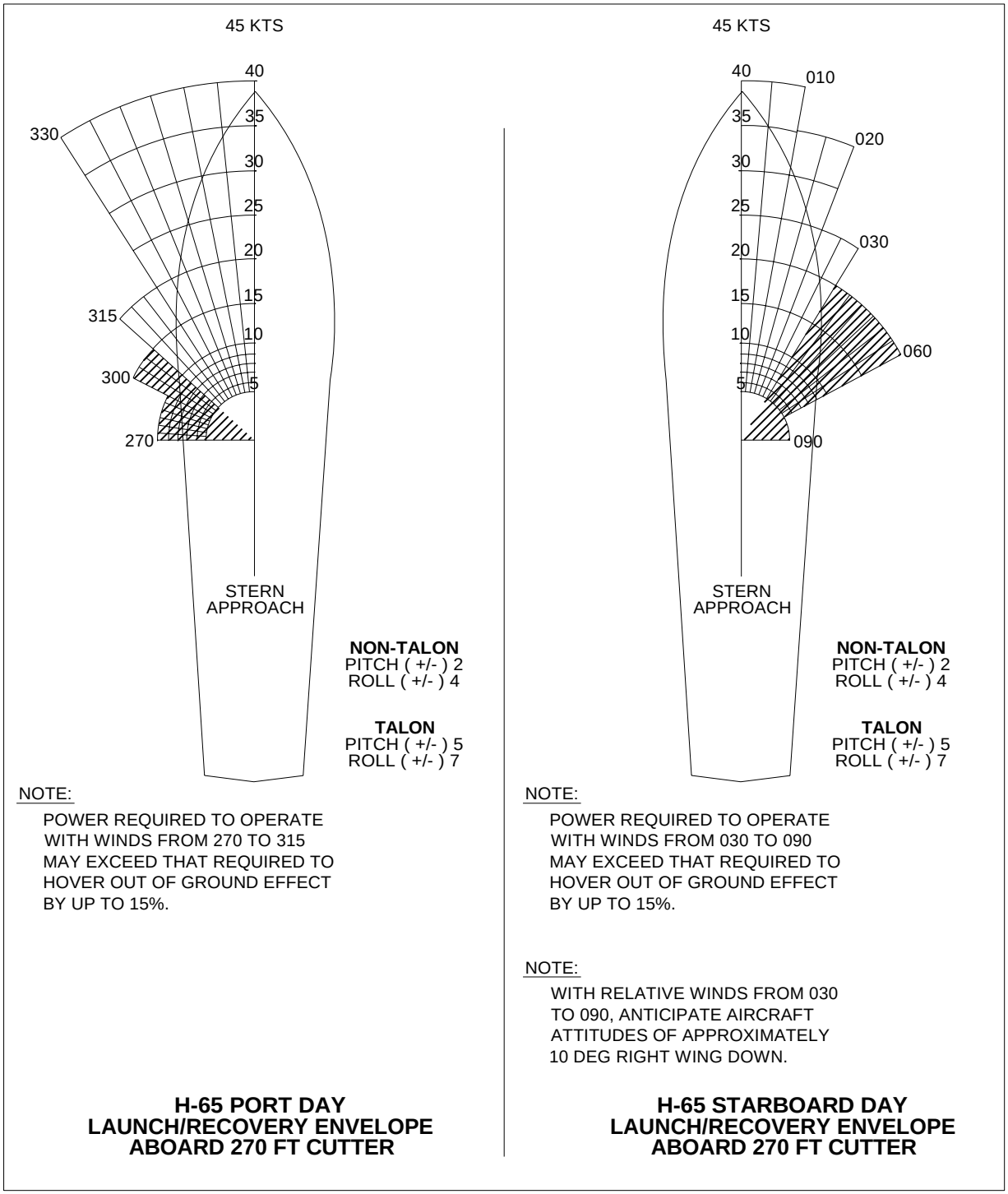

cg9100164a

Figure B-5. H-65 Day L/R Envelope Aboard WMEC 270 ft Cutters

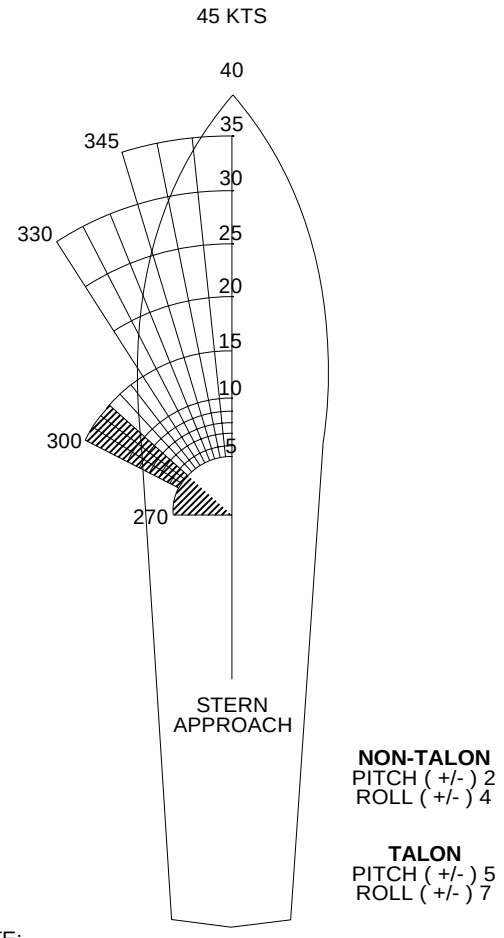

NON-TALON
PITCH (+/-) 2
ROLL (+/-) 4

TALON
PITCH (+/-) 5
ROLL (+/-) 7

NOTE:

POWER REQUIRED TO OPERATE WITH WINDS FROM 270 TO 315 MAY EXCEED THAT REQUIRED TO HOVER OUT OF GROUND EFFECT BY UP TO 15%.

H-65 PORT NIGHT LAUNCH/RECOVERY ENVELOPE ABOARD 270 FT CUTTER

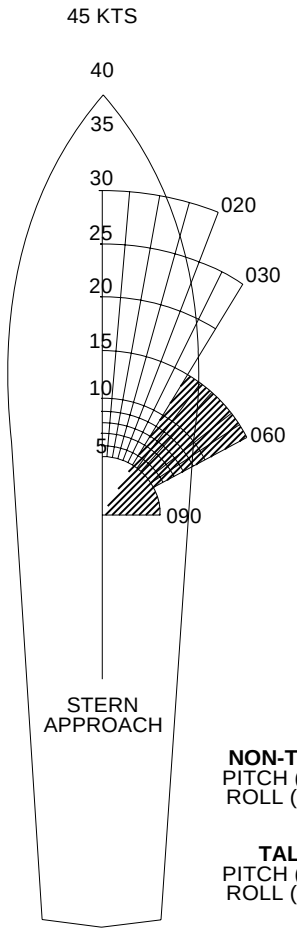

NON-TALON
PITCH (+/-) 2
ROLL (+/-) 4

TALON
PITCH (+/-) 5
ROLL (+/-) 7

NOTE:

POWER REQUIRED TO OPERATE WITH WINDS FROM 030 TO 090 MAY EXCEED THAT REQUIRED TO HOVER OUT OF GROUND EFFECT BY UP TO 15%.

NOTE:

WITH RELATIVE WINDS FROM 030 TO 090, ANTICIPATE AIRCRAFT ROLL ATTITUDES OF APPROXIMATELY 10 DEG RIGHT WING DOWN.

H-65 STARBOARD NIGHT LAUNCH/RECOVERY ENVELOPE ABOARD 270 FT CUTTER

cg9100165a

Figure B-6. H-65 Night L/R Envelope Aboard WMEC 270 ft Cutters

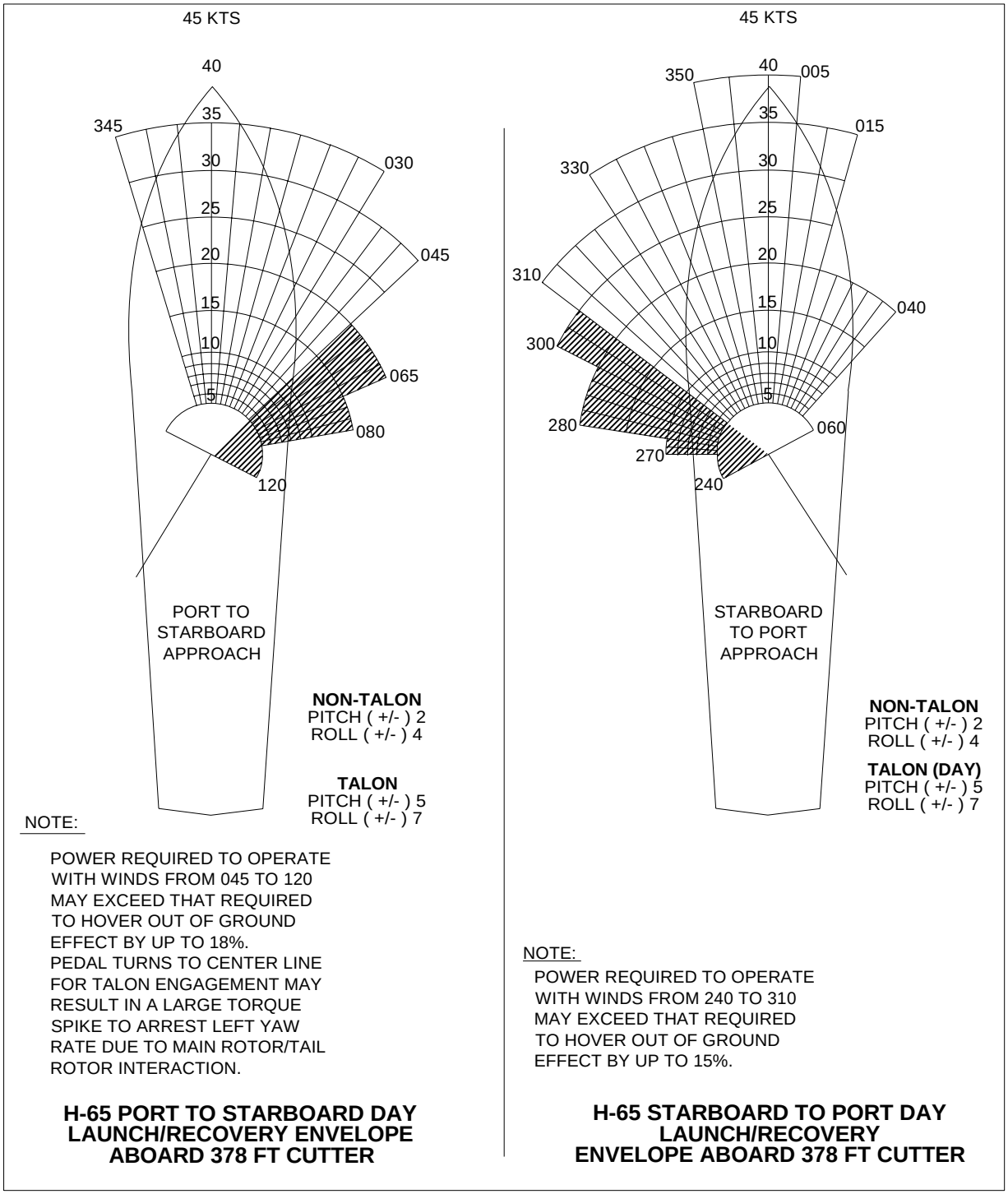

cg9100166a

Figure B-7. H-65 Day L/R Envelope Aboard WHEC 378 ft Cutters

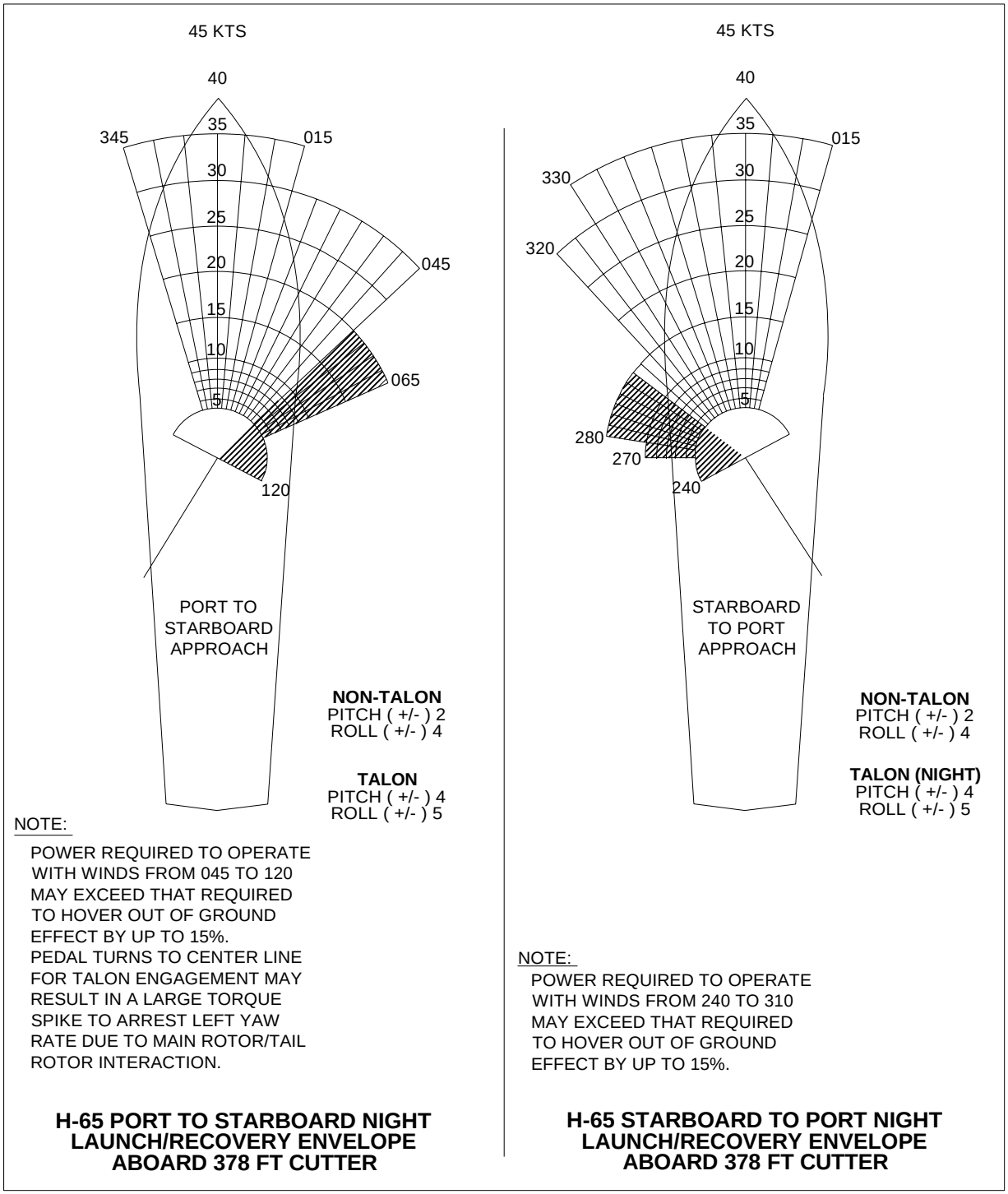

cg9100167a

Figure B-8. H-65 Night L/R Envelope Aboard the WHEC 378 ft Cutters

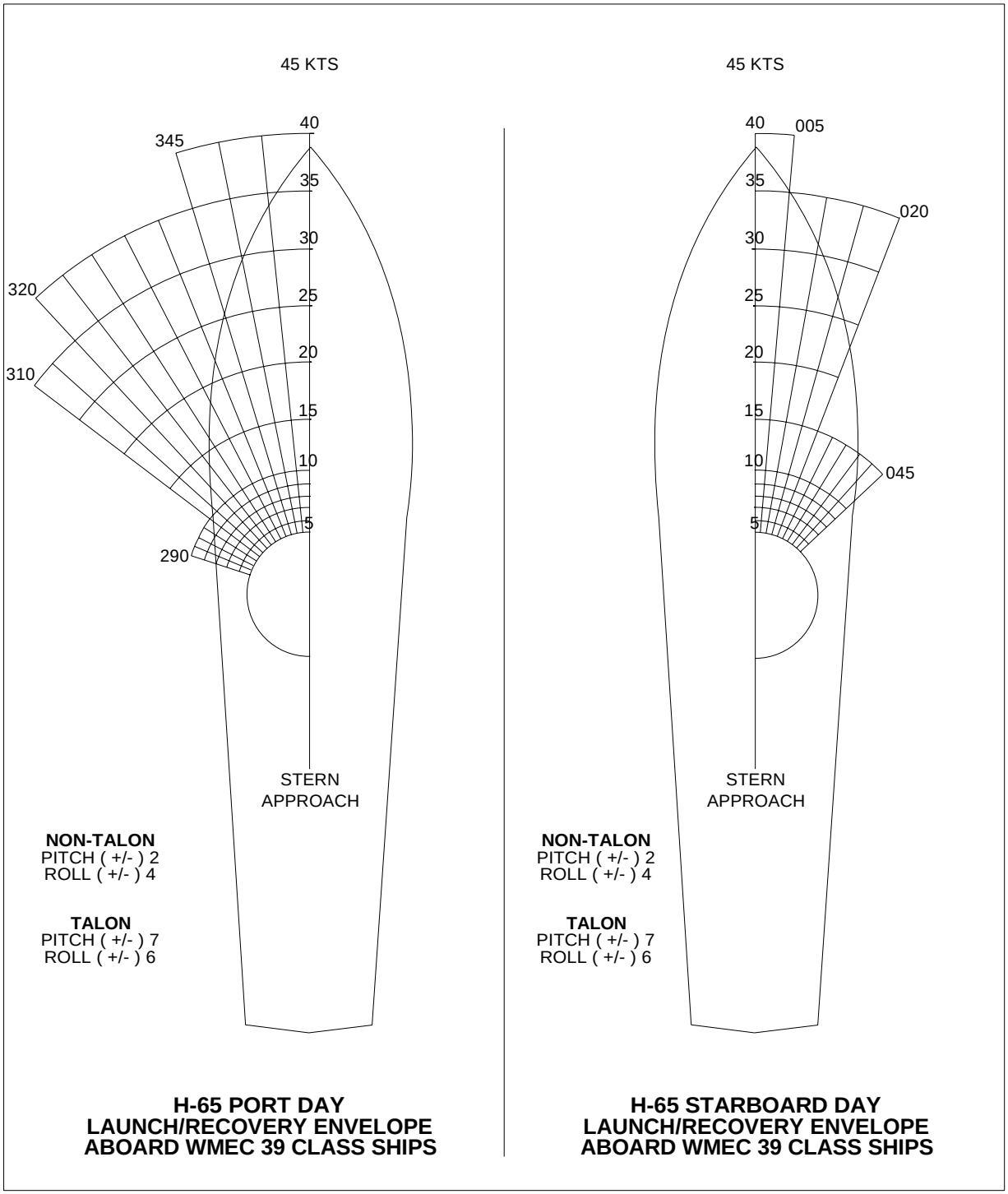

cg9100170a

Figure B-9. H-65 Day L/R Envelope Aboard the USCGC ALEX HALEY (WMEC 39)

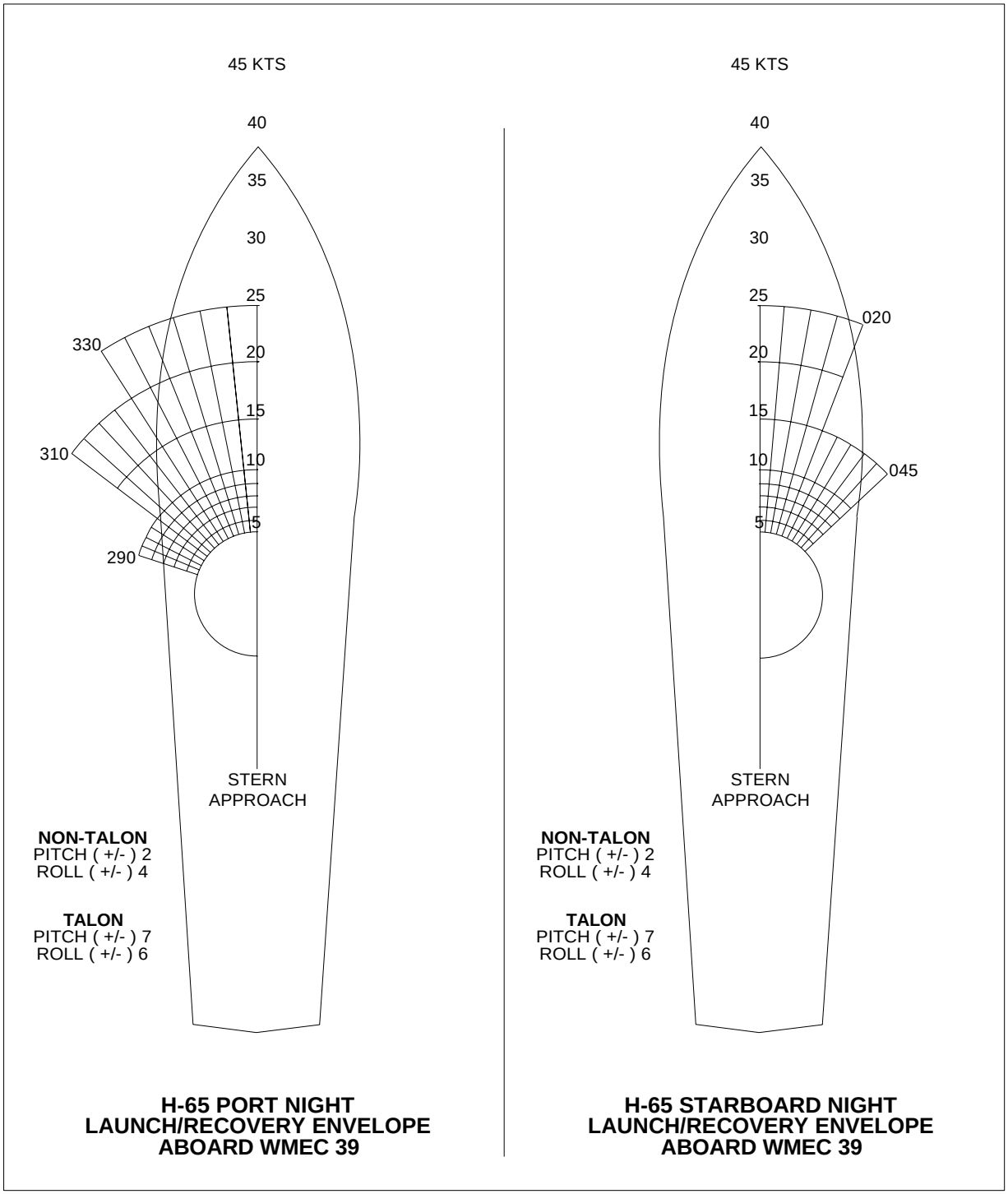

cg9100171a

Figure B-10. H-65 Night L/R Envelope Aboard the USCGC ALEX HALEY (WMEC 39)

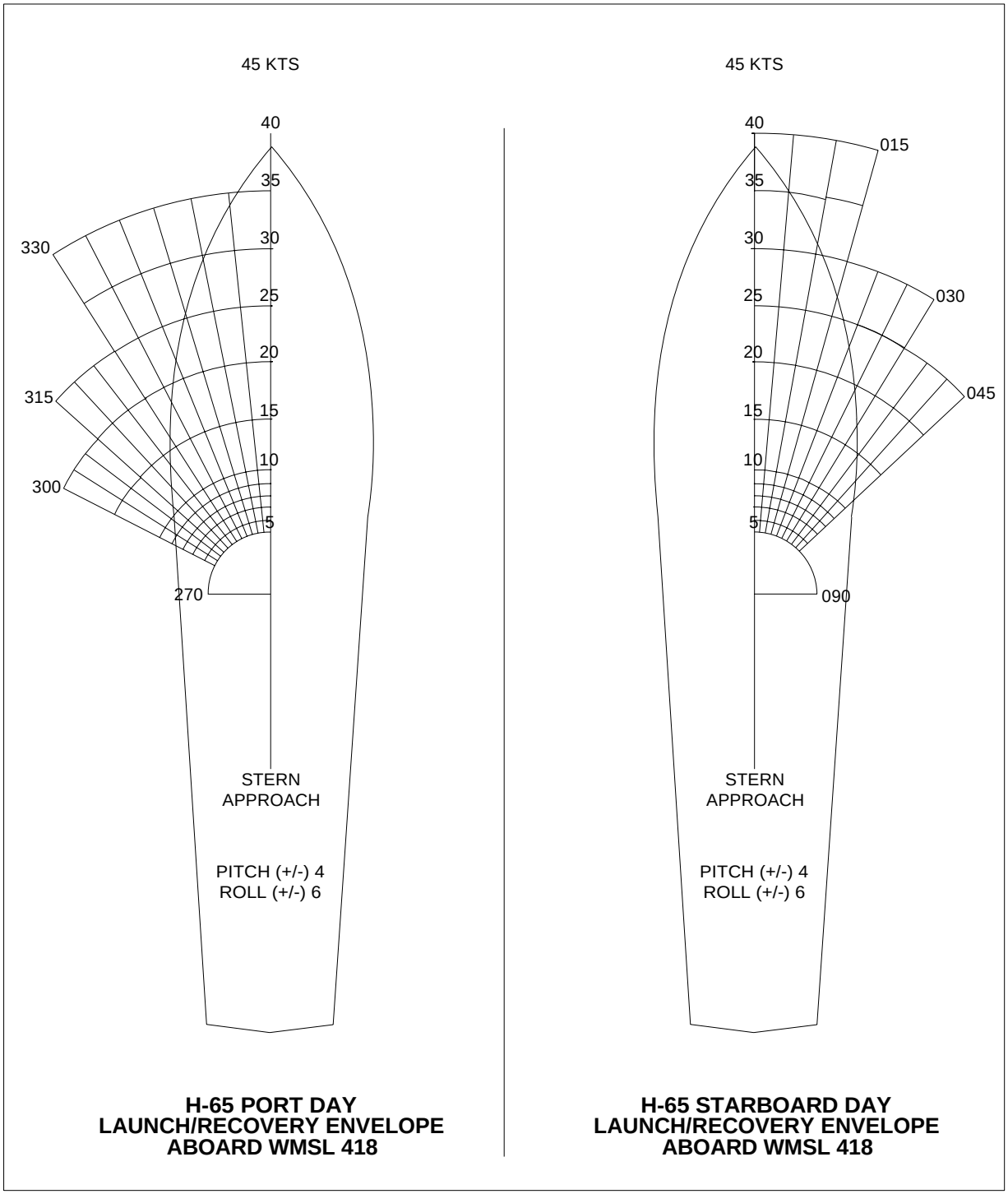

cg9100172a

Figure B-11. H-65 Day L/R Envelope Aboard WMSL 418 Cutters

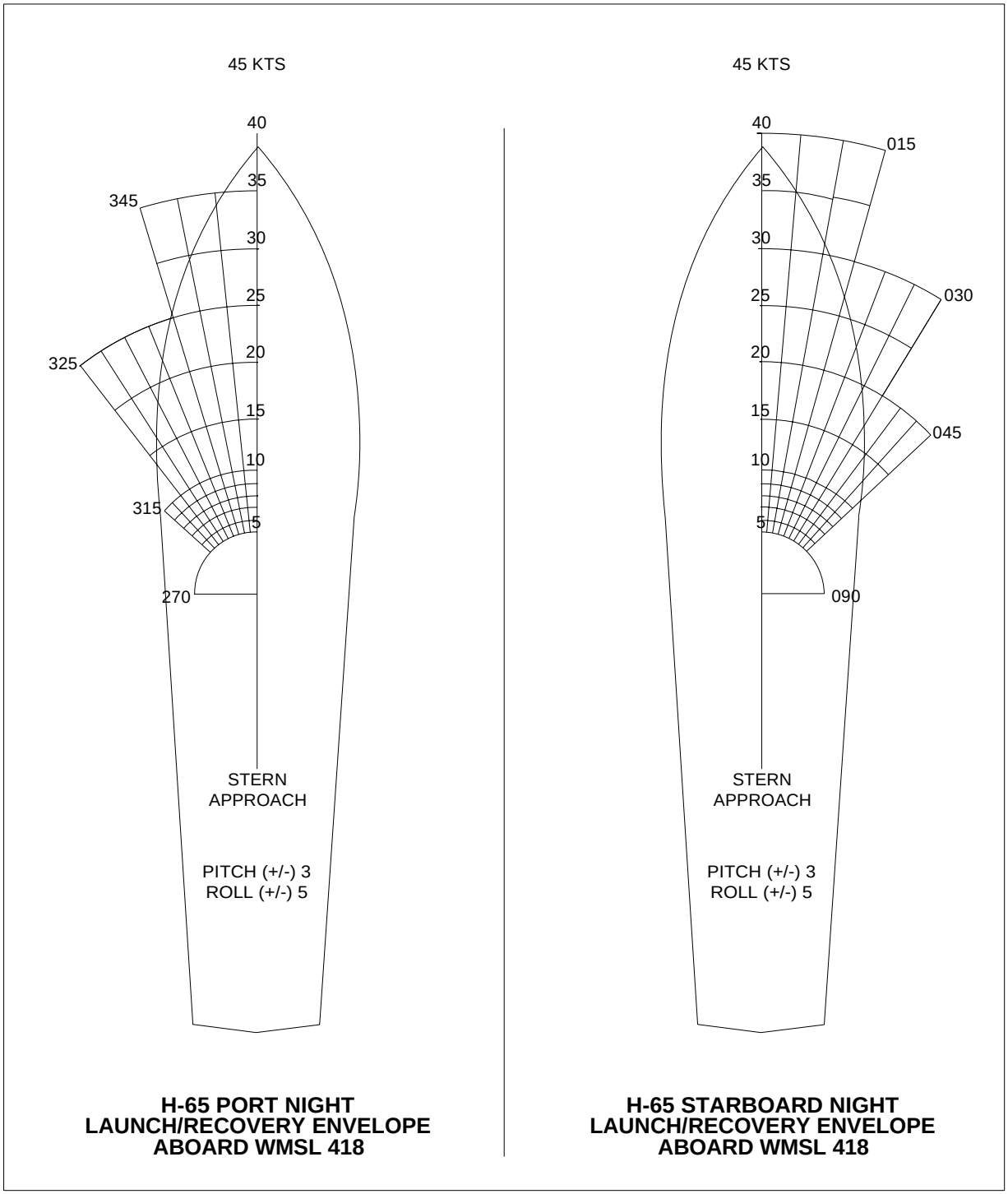

cg9100173a

Figure B-12. H-65 Night L/R Envelope Aboard WMSL 418 Cutters

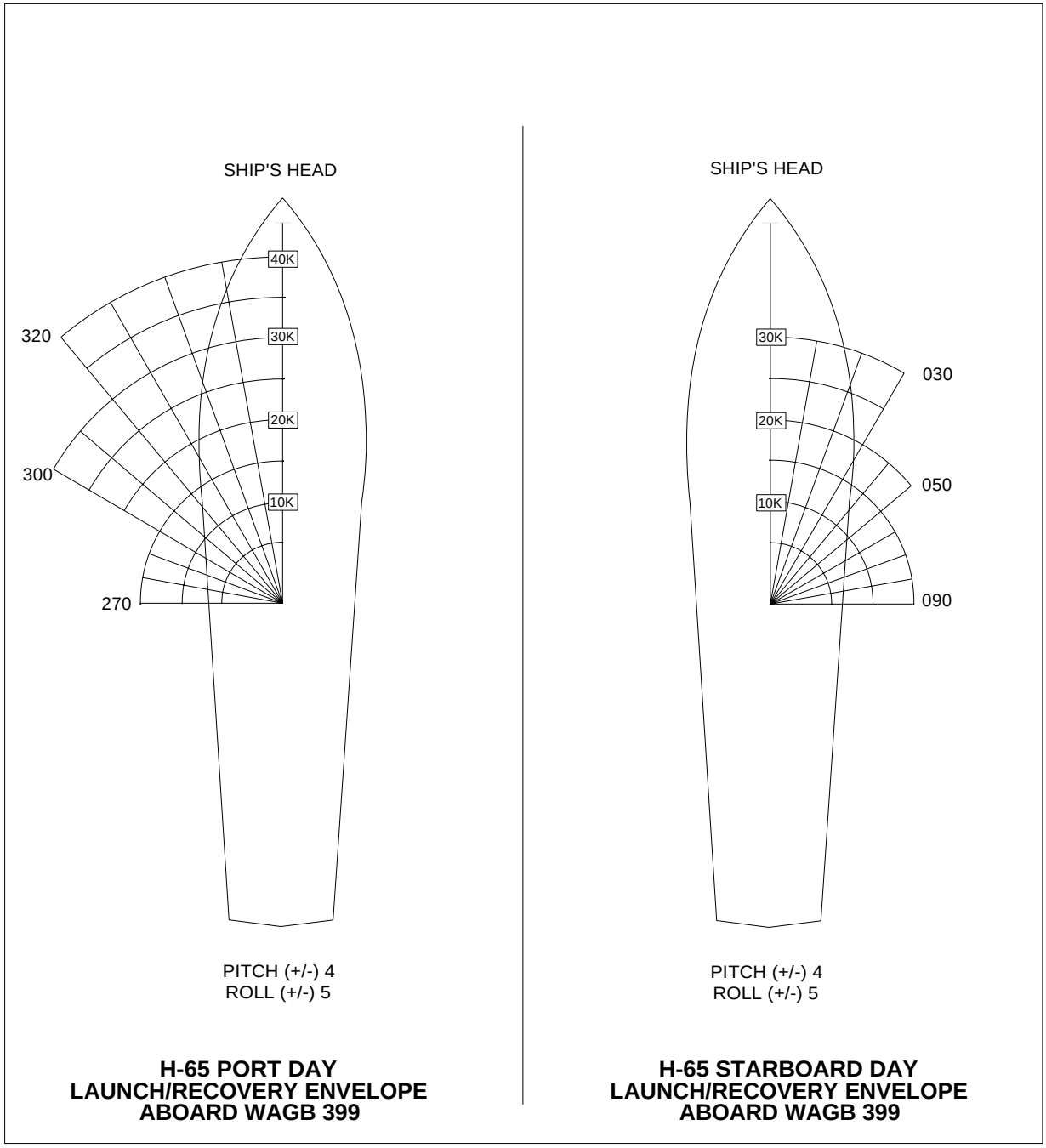

cg9100180a

Figure B-13. H-65/WAGB 399 Day Launch and Recovery Limits

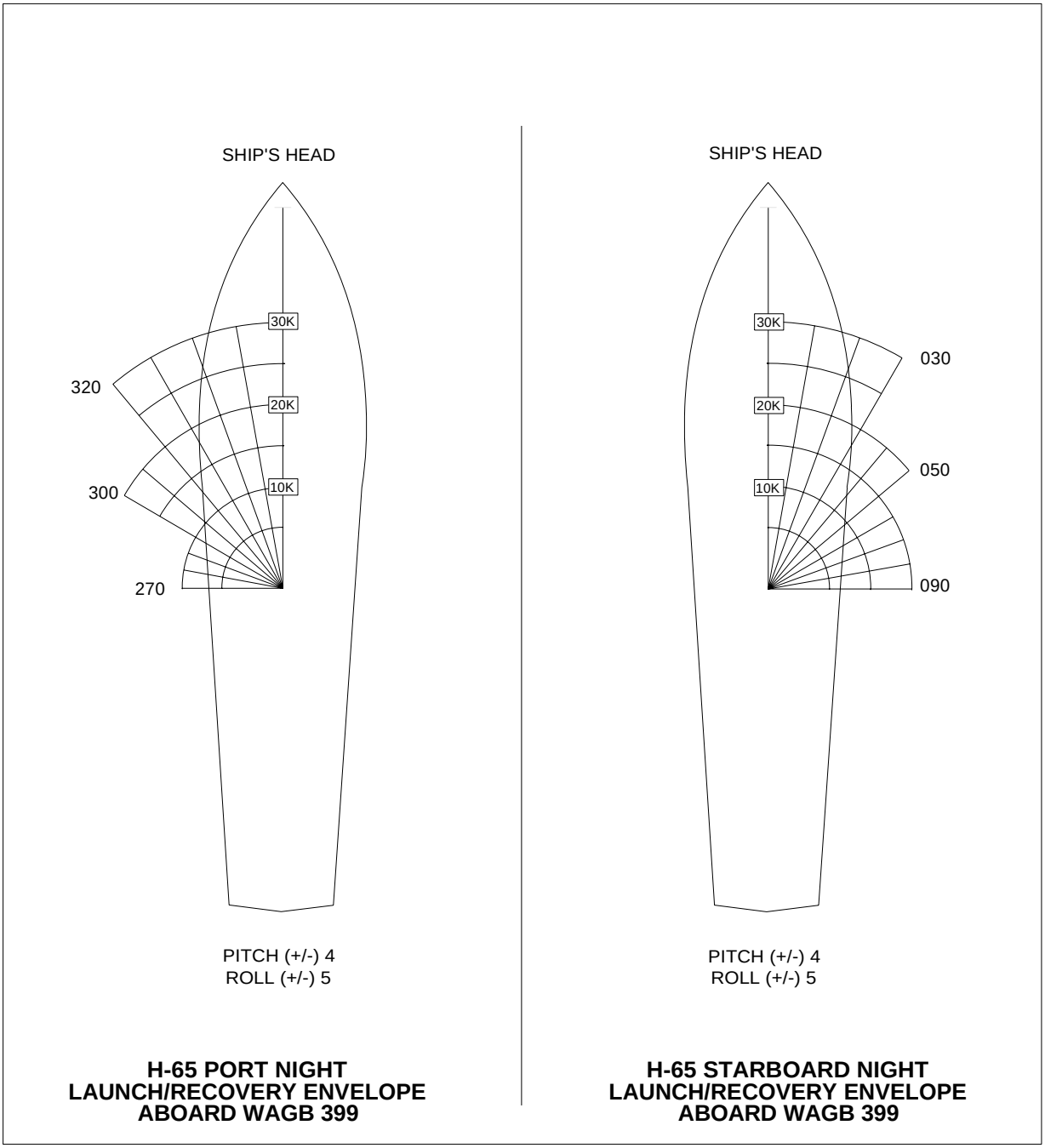

cg91000181a

Figure B-14. H-65/WAGB 399 Night Launch and Recovery Limits

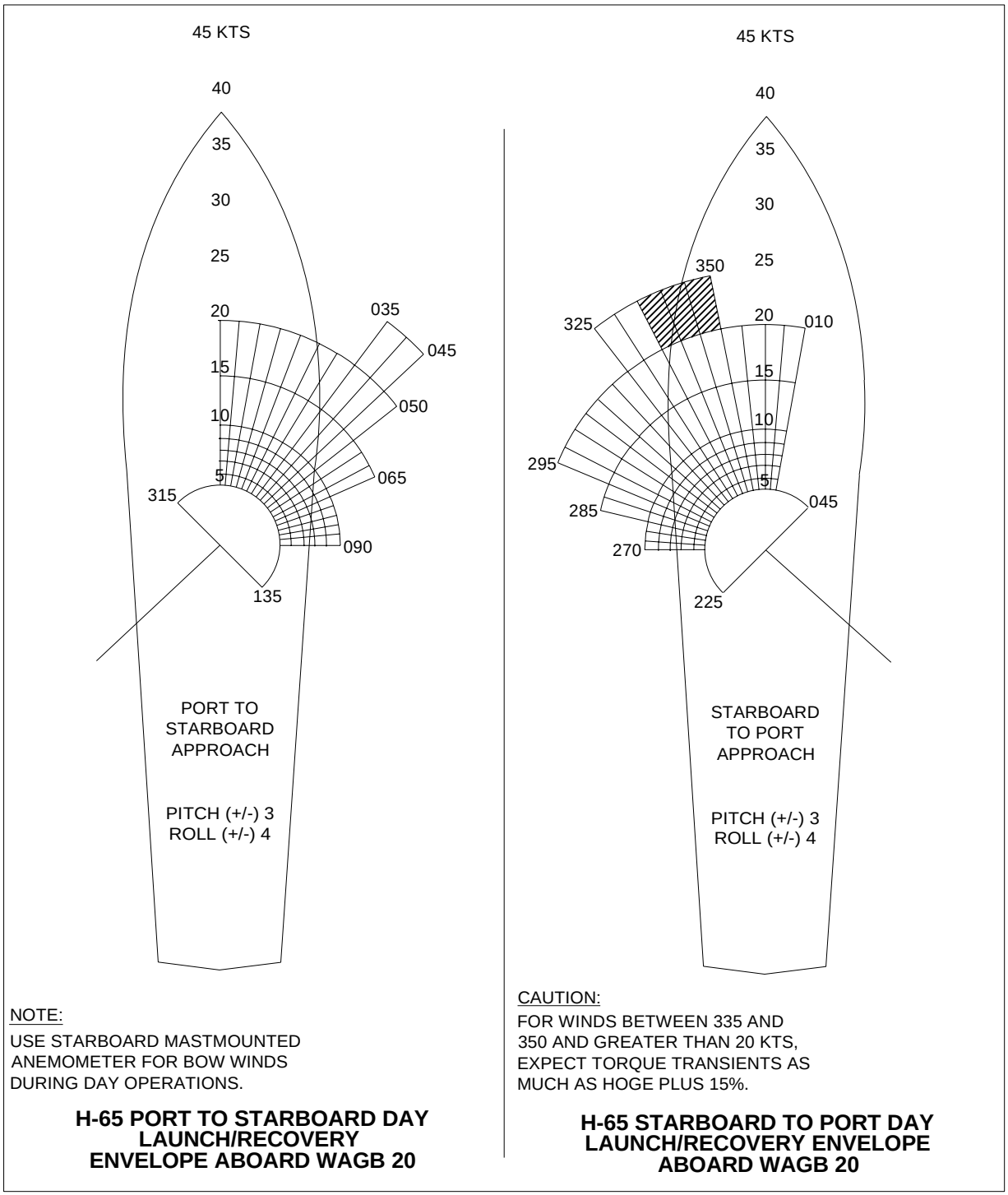

cg9100168a

Figure B-15. H-65 Day L/R Envelope Aboard the USCGC HEALY (WAGB 20)

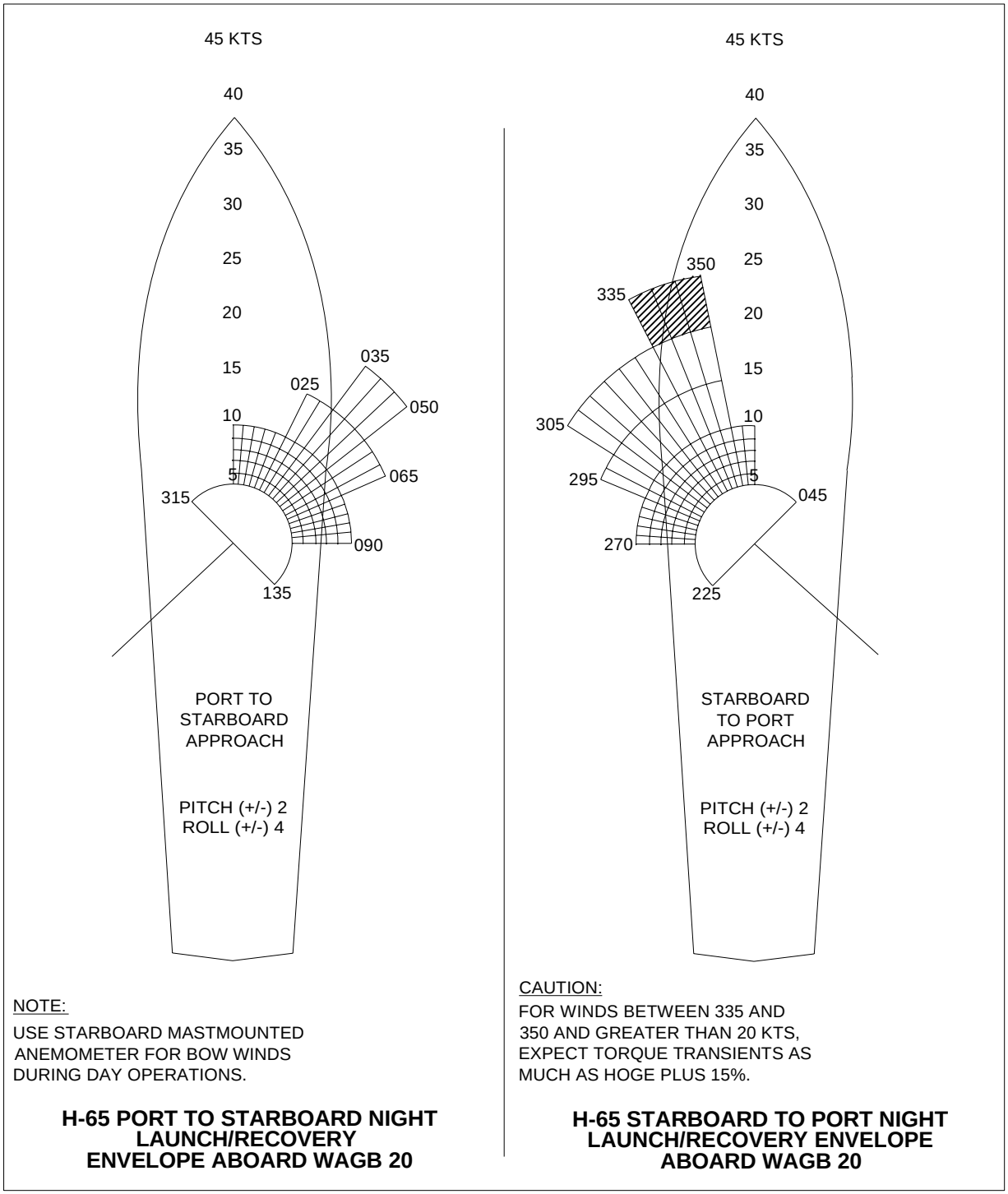

cg9100169a

Figure B-16. H-65 Night L/R Envelope Aboard the USCGC HEALY (WAGB 20)

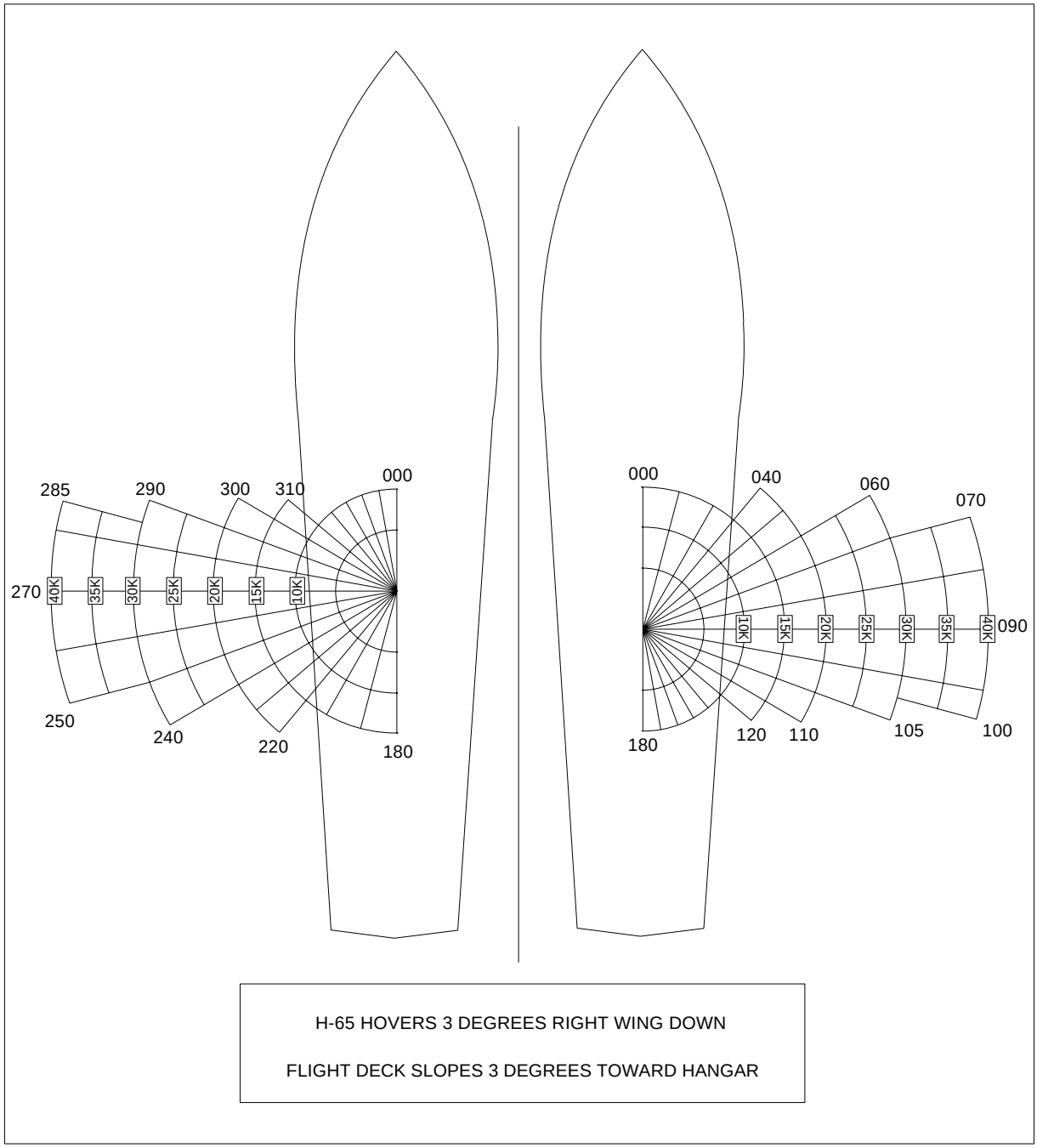

cg9100097a

Figure B-17. H-65/WAGB 399 and WAGB 420 Athwartship Launch and Recovery Limitations

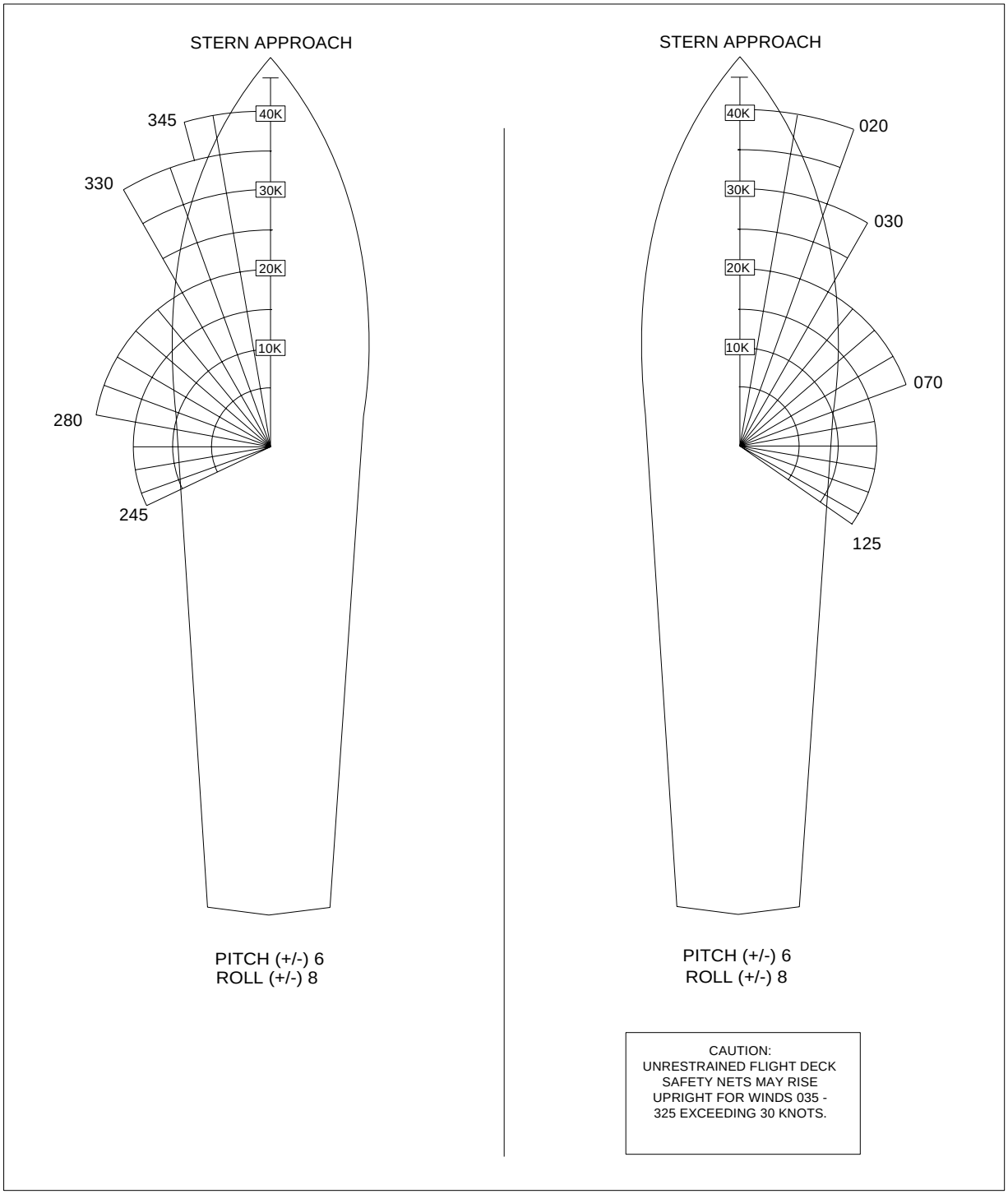

cg9100106a

Figure B-18. H-60/WMEC 270 Day Launch and Recovery Limitations

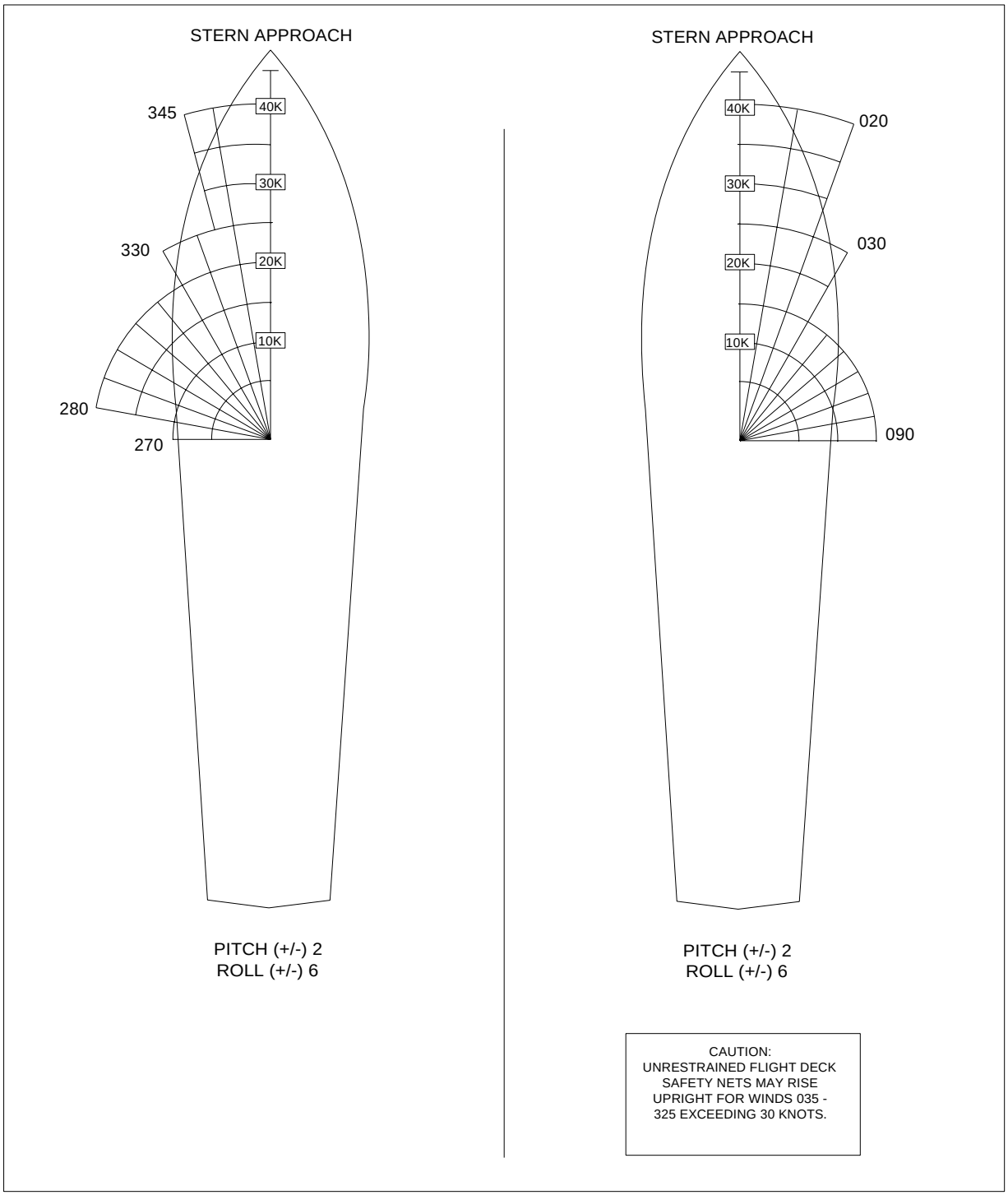

cg9100107a

Figure B-19. H-60/WMEC 270 Night Launch and Recovery Limitations

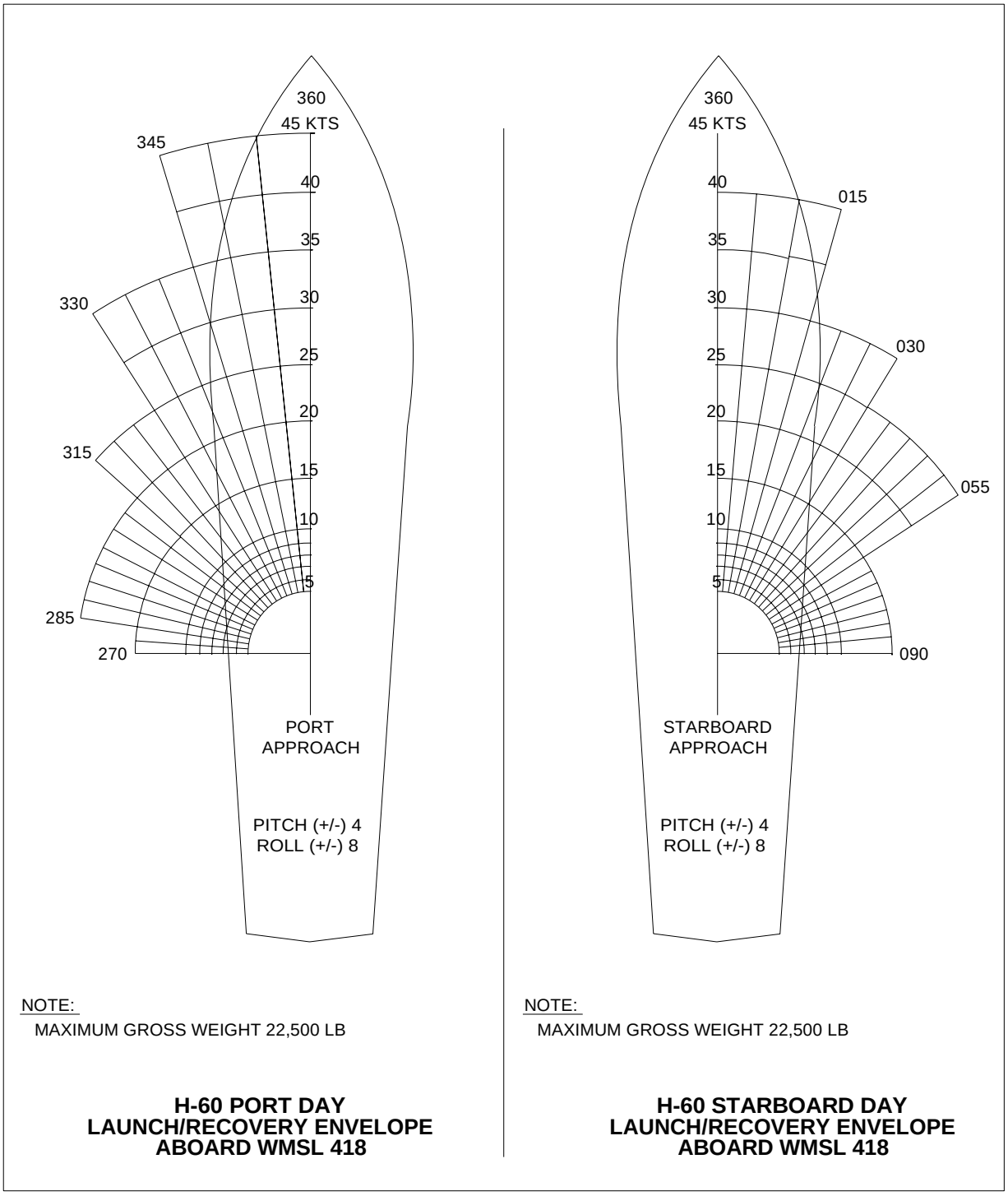

cg9100178a

Figure B-20. H-60/WMSL 418 Day Launch and Recovery Limitations

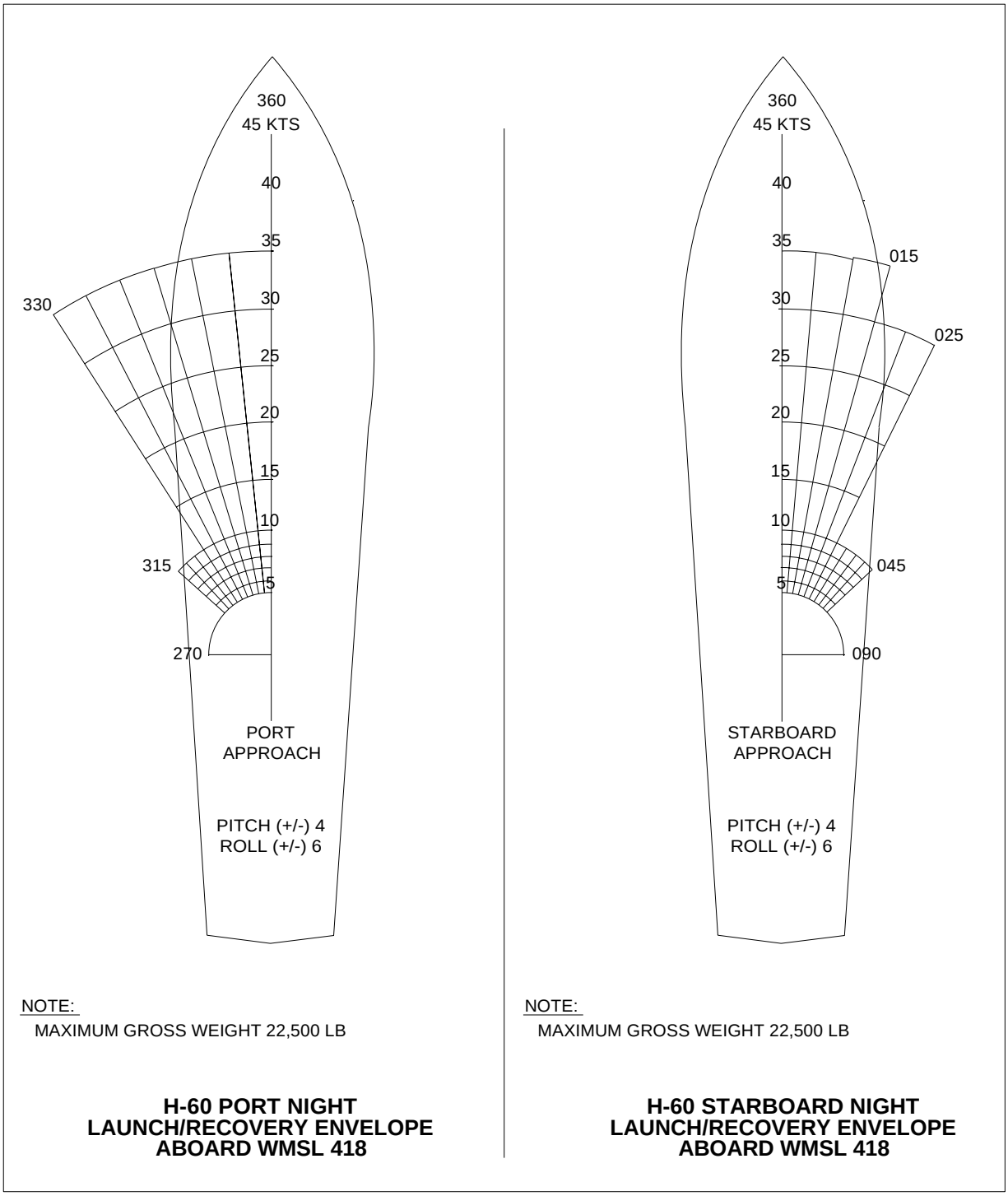

cg9100179a

Figure B-21. H-60/WMSL 418 Night Launch and Recovery Limitations

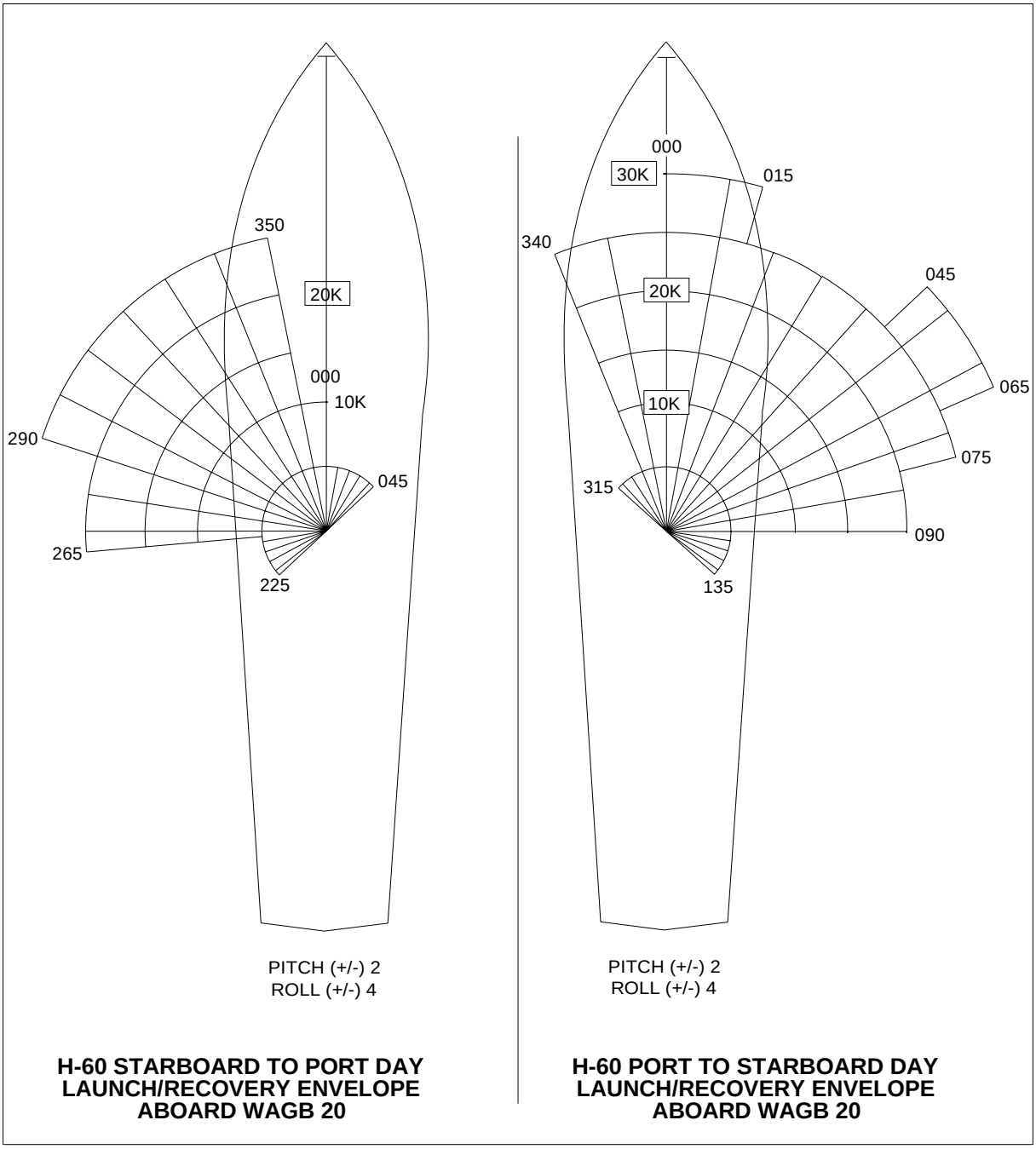

cg9100110a

Figure B-22. H-60 Day L/R Envelope Aboard USCGC HEALY (WAGB 20)

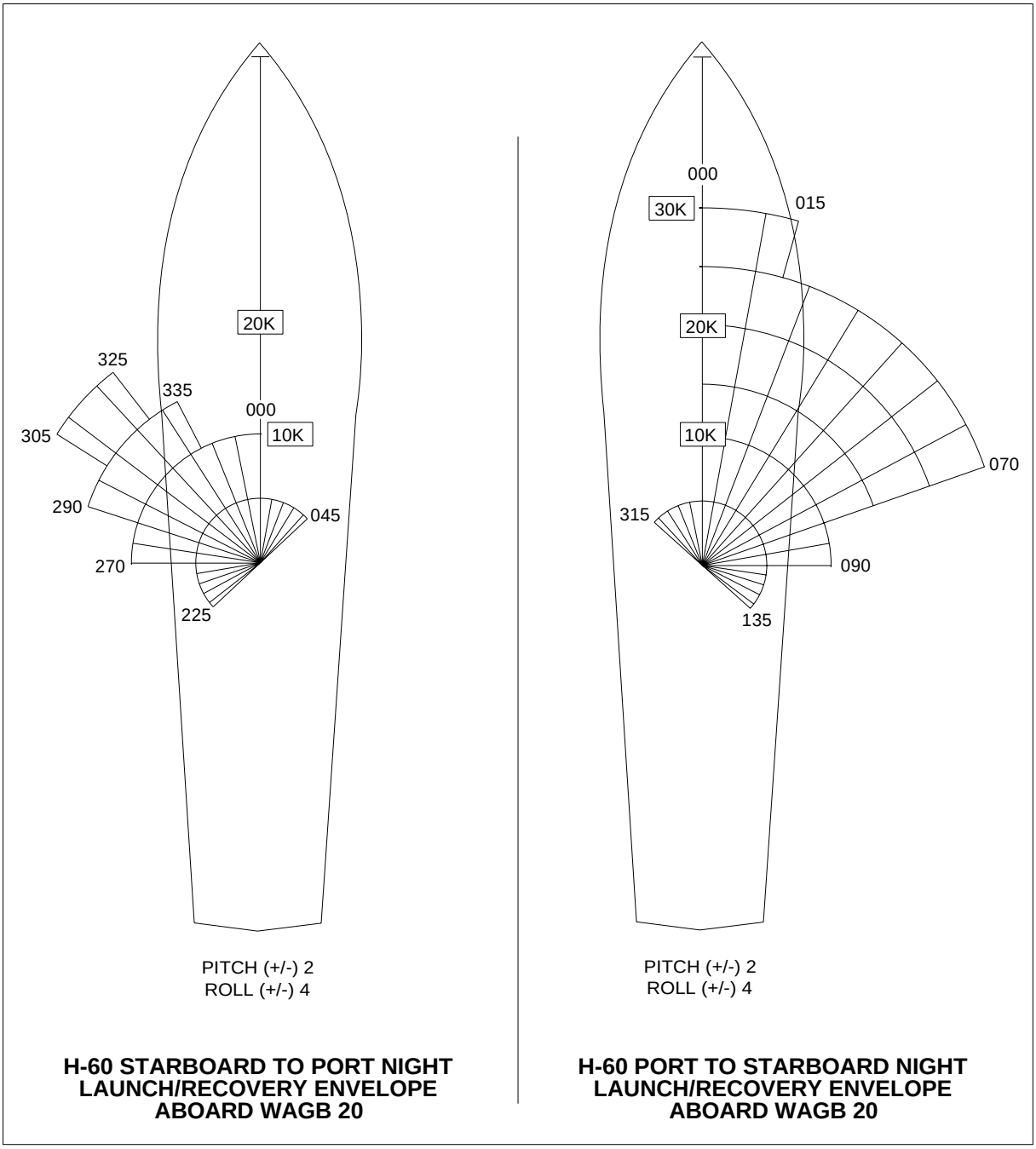

cg9100183a

Figure B-23. H-60 Night L/R Envelope Aboard USCGC HEALY (WAGB 20)

APPENDIX C. Signals

A. INTRODUCTION. This appendix depicts the signals that shall be used for all shipboard-helicopter operations aboard Coast Guard cutters.

B. IN THIS APPENDIX. This appendix discusses the following topics:

1. Signals.
2. Lost Communications/EMCON Signals.
3. Helicopter Handling (LSO/Pilot) Signals.

C. SIGNALS.

1. Deck Status Light. The deck status light provides a means for the HCO to pass clearances to the helicopter visually. Clearance is indicated as follows:
   a. Red: Helicopter is not cleared for the particular evolution, or the deck is fouled.
   b. Amber: Helicopter is cleared to start engines and engage/disengage rotors (cutter is restricted from maneuvering with amber showing since the rotor is transitioning from 0 to 100 percent RPM or vice versa).
   c. Green: Helicopter is cleared to perform the desired evolution (land, takeoff, touch and go/VERTREP, or HIFR).

CAUTION

THE DECK STATUS LIGHT IS NOT USED DURING NIGHTTIME OPERATIONS UNLESS PRE-BRIEFED FOR EMCON COMMUNICATIONS WITH THE CONCURRENCE OF THE PIC AND CO.

NOTE

If the deck status light fails during flight operations, the deck status may be passed over the radio, or the HOTEL flag (day) may be used to complete the current flight operation.

2. NVG Compatible Signals. All signal devices described in this appendix (i.e., flashlight, wands, etc.) and used during nighttime operations shall be NVG compatible.

D. LOST COMMUNICATIONS SIGNALS, EMISSION CONTROL (EMCON).

1. Overview. During periods of lost communications or EMCON when radio transmissions are not desired, the following signals are used to request or grant clearances.
   a. Pilot to HCO (Request Clearance).
      (1) Day: Secure anticollision light.
      (2) Nighttime: Energize anticollision light.
   b. HCO to Pilot.
      (1) Clearance not granted:
         (a) Day: Deck status light RED or HOTEL at the dip (halfway up).

(b) Nighttime: Homing beacon energized, waveoff signal from the LSO, or no signal from the LSO.

(2) Clearance granted:

(a) Day: Deck status light GREEN or HOTEL closed up.

(b) Nighttime: Homing beacon secured, and move ahead signal from the LSO.

E. HELICOPTER HANDLING (LSO/PILOT) SIGNALS.

SIGNAL	DAY	NIGHTTIME	REMARKS
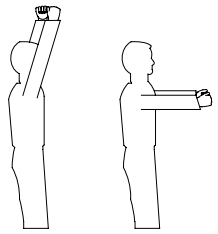 LANDING DIRECTION	LSO stands with arms raised vertically above head and facing toward the point where the aircraft is to land. The arms are lowered repeatedly from a vertical to a horizontal position, stopping finally in the horizontal position.	Same as day signal with addition of wands.	
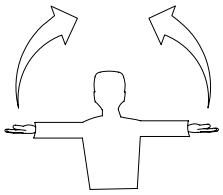 MOVE UPWARD	Arms extended horizontally sideways beckoning upwards with palms turned up. Speed of movement indicates rate of ascent.	Same as day signal with the addition of wands.	Conforms to ICAO signal.
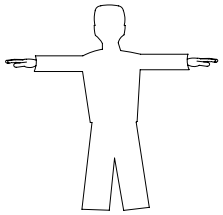 HOVER	Arms extended horizontally sideways palms downward.	Same as day signal with the addition of wands.	Conforms to ICAO signal.

SIGNAL	DAY	NIGHTTIME	REMARKS
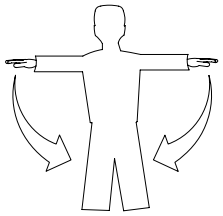 MOVE DOWNWARD	Arms extended horizontally sideways beckoning downwards with palms turned down. Speed of movement indicates rate of descent.	Same as day signal with the addition of wands.	Conforms to ICAO signal.
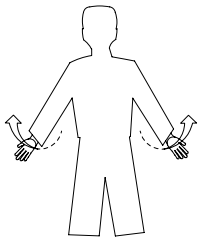 MOVE BACK	Arms by sides, palms facing forward, swept forward and upward repeatedly to shoulder height.	Same as day signal with the addition of wands.	Conforms to ICAO signal.
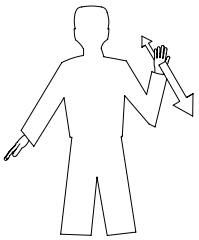 TURN TO LEFT	Point right arm downward, left arm is repeatedly moved upward — backward. Speed of arm indicates rate of turn.	Same as day signal with the addition of wands.	Also used for spot turns for airborne aircraft. Conforms to ICAO signal.
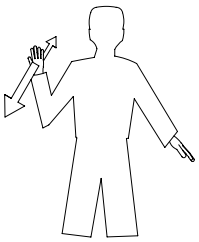 TURN TO RIGHT	Point left arm downward, right arm is repeatedly moved upward — backward. Speed of arm indicates rate of turn.	Same as day signal with the addition of wands.	Also used for spot turns for airborne aircraft. Conforms to ICAO signal.

SIGNAL	DAY	NIGHTTIME	REMARKS
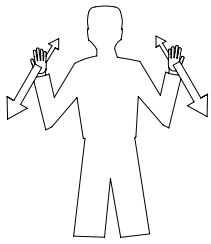 MOVE AHEAD	Arms extended from body and held horizontal to shoulders with hands upraised and above eye level, palms facing backwards. Execute beckoning arm motion angled backward. Rapidity indicates speed desired of aircraft.	Same as day signal with the addition of wands.	
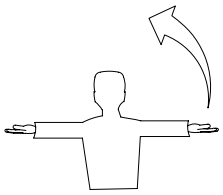 MOVE TO LEFT	Right arm extended horizontally sideways in direction of movement and other arm swung over the head in same direction, in a repeating movement.	Same as day signal with the addition of wands.	
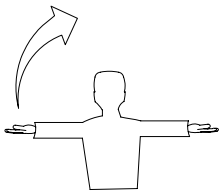 MOVE TO RIGHT	Left arm extended horizontally sideways in direction of movement and other arm swung over the head in same direction, in a repeating movement.	Same as day signal with the addition of wands.	
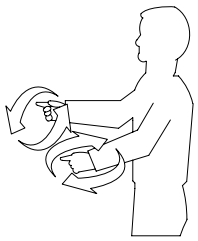 LOWER WHEELS	When aircraft approaches LSO with landing gear retracted, LSO gives signal by side view of a cranking circular motion of hands.	Same as day signal with the addition of wands.	

SIGNAL	DAY	NIGHTTIME	REMARKS
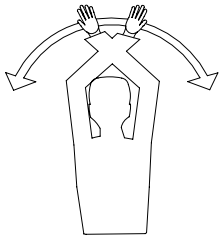 WAVEOFF	Waving of arms over the head.	Same as day signal with the addition of wands.	Signal is mandatory.
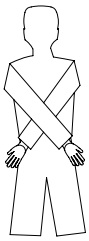 LAND	Arms crossed and extended downwards in front of the body.	Same as day signal with the addition of wands.	Conforms to ICAO signal.
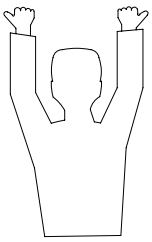 DROOP STOPS OUT	When rotor starts to run down, LSO stands with both hands raised above head, fists closed, thumbs pointing out.	Same as day signal with the addition of wands.	
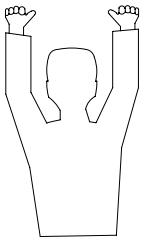 DROOP STOPS IN	When droop stops go in, LSO turns thumbs inward.	Same as day signal with the addition of wands.	
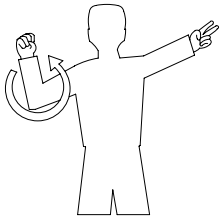 START ENGINES	Left hand overhead with appropriate number of fingers extended, to indicate the number of the engine to be started, and circular motion of right hand at head level.	Similar to the day signal except the wand in the left hand will be flashed to indicate the engine to be started.	Conforms to ICAO signal.

SIGNAL	DAY	NIGHTTIME	REMARKS
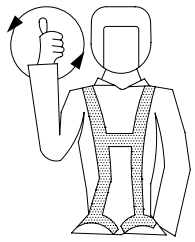 READY TO START ENGINE (PILOT)	Moves hand in circle perpendicular to the deck; follows with a thumbs up signal. Signify by number of fingers engine to be started.	Turns on flashlight and moves it in a circle perpendicular to the deck.	
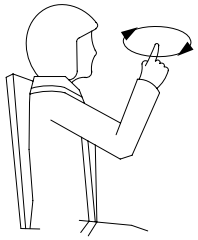 READY TO ENGAGE ROTORS (PILOT)	Moves hand in horizontal circle at eye level, index finger extended. Aircraft lights flashing bright.	Same as day signal except hold light in hand.	
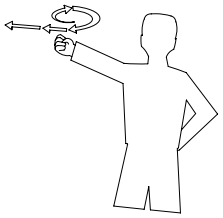 TAKEOFF	LSO conceals left hand and makes circular motion of right hand over head in horizontal plane ending in a throwing motion of arm towards direction of takeoff.	Same as day signal with the addition of wands.	
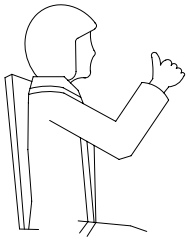 READY FOR TAKEOFF (PILOT)	Gives thumbs up signal at eye level.	Give thumbs up signal by turning on a flashlight and moving it up and down.	

SIGNAL	DAY	NIGHTTIME	REMARKS
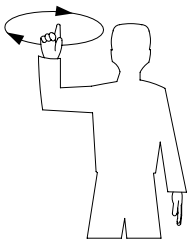 ENGAGE ROTOR(S)	Circular motion in horizontal plane with right hand above head.	Same as day signal with the addition of wands.	
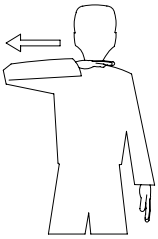 CUT ENGINE(S) (PILOT/LSO)	Either arm and hand level with shoulder, hand moving across throat, palm downward. The hand is moving sideways with the arm remaining bent.	Same as day signal with the addition of wands.	Conforms to ICAO signal.
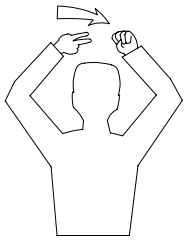 CONNECT GROUND ELECTRICAL POWER SUPPLY	Hands above head, left fist partially clenched, right hand moved in direction of left hand with first two fingers extended and inserted into circle made by fingers of the left hand.	Same as day signal with the addition of wands.	
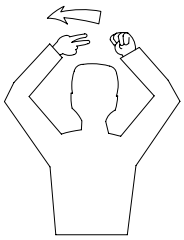 DISCONNECT GROUND ELECTRICAL POWER SUPPLY	Hands above head, left fist partially clenched, right hand moved away from left hand, withdrawing first two fingers from circle made by fingers of left hand.	Same as day signal with the addition of wands.	

SIGNAL	DAY	NIGHTTIME	REMARKS
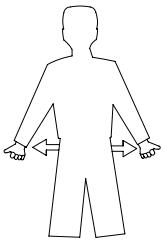 REMOVE CHOCKS	Arms down, fists closed, thumbs extended outwards, swing arms outwards.	Same as day signal with the addition of wands.	Conforms to ICAO signal.
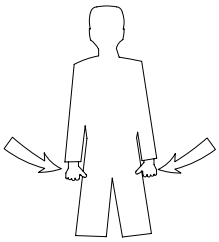 INSERT CHOCKS	Arms down, fists closed, thumbs extended inwards, swing arms from extended position inwards.	Same as day signal with the addition of wands.	Conforms to ICAO signal.
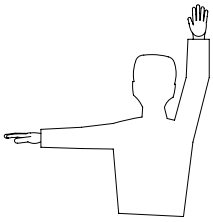 PERSONNEL APPROACHING OR DEPARTING THE AIRCRAFT	Left hand raised vertically overhead, palm towards aircraft. The other hand indicates to personnel concerned and gestures towards or away from aircraft.	Same as day signal with the addition of wands.	
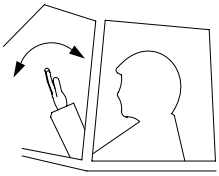 CLEARANCE FOR PERSONNEL TO APPROACH AIRCRAFT	A beckoning motion with right hand at eye level.		

SIGNAL	DAY	NIGHTTIME	REMARKS
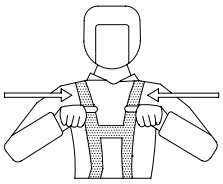 INSERT CHOCKS AND/OR INSTALL TIEDOWNS (PILOT)	Swings arms together, thumbs extended inwards, at eye level. In single piloted aircraft, pilot may swing one arm alternately from each side, thumb extended inwards.	Moves flashlight at eye level in a horizontal plane alternately inwards from each side.	
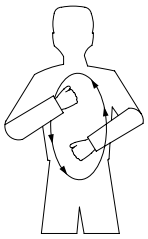 INSTALL/OVERHAUL TIEDOWNS (LSO)	To tiedown crew: rotates hands in a circle perpendicular to and in front of body.	Same as day signal with the addition of wands.	
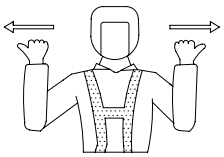 REMOVE CHOCKS AND/OR REMOVE TIEDOWNS (PILOT)	Swings arms apart, thumbs extended outwards at eye level. In single piloted aircraft, pilot may swing one arm alternately from each side, thumb extended outwards.	Using flashlight at eye level, flash light on/off at 1-second intervals.	
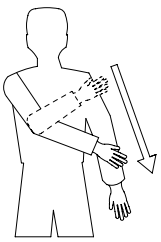 REMOVE TIEDOWNS (LSO)	To tiedown crew: makes wiping motion down left arm with right hand.	Same as day signal with the addition of wands.	

SIGNAL	DAY	NIGHTTIME	REMARKS
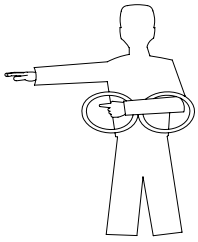 ENGINE FIRE	Describes a large figure eight with one hand and points to the fire area with the other hand.	Same as day signal with the addition of wands.	Signal is meant for information only. Specific action to be taken shall be determined by pilot.
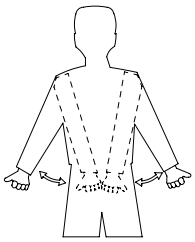 LANDING WITH PRIMARY TIEDOWNS (LSO)	To tiedown crew: taps fist together in horizontal plane in front of body.	Same as day signal with the addition of wands.	Signal given prior to helo commencing approach.
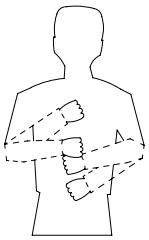 TOUCH AND GO LANDING (LSO)	To tiedown crew: taps fist together in a vertical plane in front of body.	Same as day signal with the addition of wands.	Signal given prior to helo commencing approach.
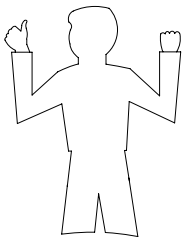 TIEDOWNS REMOVED READY FOR TAKEOFF (LSO)	Holds right thumb at eye level; holds left fist at eye level.	Same as day signal with the addition of wands.	
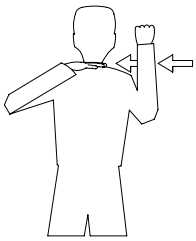 DISENGAGE ROTORS (LSO)	Holds left fist above head; makes throat cutting motion with right hand.	Same as day signal with the addition of wands.	This is also used to signal secure engines.

SIGNAL	DAY	NIGHTTIME	REMARKS
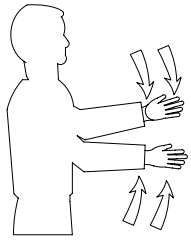 CARGO HOOK NOT DOWN/UP	Arms extended, makes short up-and-down cutting action, alternating hands.	Same as day with the addition of wands.	
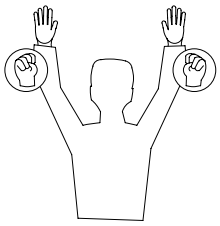 BRAKES	ON — Arms above head, open palms and fingers raised with palms toward aircraft, then fist closed. OFF — Arms above head, palms toward aircraft, fist closed, then opened with fingers raised.	ON — Arms above head with signal wands uncrossed, then crossed. OFF — Arms above head with signal wands crossed, then uncrossed.	
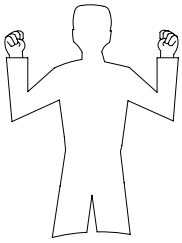 HOLD POSITION	Makes clenched fists at eye level.	Holds crossed signal wands over head.	Signal is mandatory.
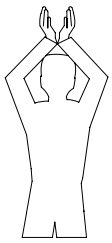 LOCK TAIL WHEEL	Hands together overhead, opened from the wrists in a V then closed suddenly.	Same as day signal with the addition of wands.	

SIGNAL	DAY	NIGHTTIME	REMARKS
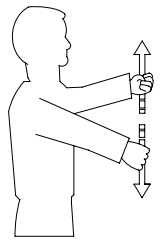 HOOK UP LOAD	Rope-climbing motion with hands.	Same as day signal with the addition of wands.	
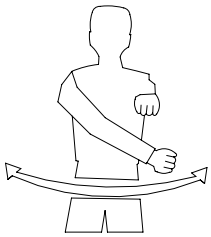 RELEASE LOAD	Left arm extended forward horizontally, fist clenched, right hand making vertical pendulum movement with fist clenched.	Same as day signal with the addition of wands.	
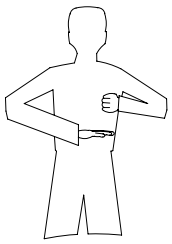 LOAD HAS NOT BEEN RELEASED	Bend left arm horizontally across check with fist clenched, palm downward; open right hand pointed up vertically to center of left fist.	Same as day signal with the addition of wands.	
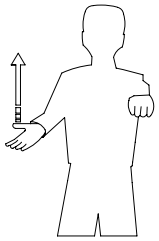 WINCH (HOIST) UP	Left arm horizontal in front of body, fist clenched, right hand with palm turned upwards making upward motion.	Same as day signal with the addition of wands.	
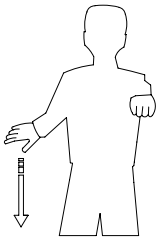 WINCH (HOIST) DOWN	Left arm horizontal in front of body, right hand with palm turned downwards making downward motion.	Same as day signal with the addition of wands.	

SIGNAL	DAY	NIGHTTIME	REMARKS
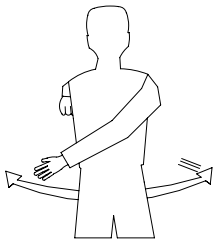 CUT (SHEAR) CABLE	Right arm extended horizontally, fist clinched, left arm making horizontal slicing movements below the right fist, palm down.	Same as day signal with the addition of wands.	
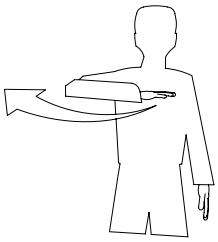 SPREAD PYLON (UNFOLD ROTOR BLADES)	Bend right elbow across chest, palm downward. Extend arm outward to horizontal position, keeping palm open and facing down.	Same as day signal with the addition of wands.	
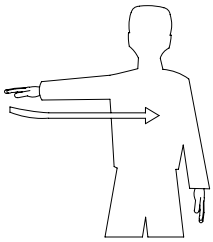 FOLD PYLON (FOLD ROTOR BLADES)	Extend right arm horizontally, palm downward. Bend arm, keeping palm down.	Same as day signal with the addition of wands.	
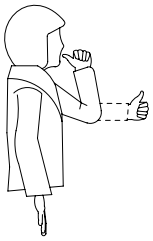 I DESIRE HIFR/FUEL	Helo crewmember brings thumb to mouth as if drinking from glass.	Same as day signal except helo crewmember holds flashlight in hand.	
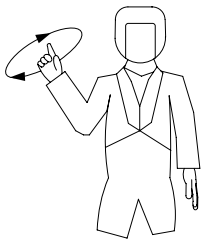 COMMENCE FUELING	Helo crewmember makes circular motion with right hand.	Helo crewmember makes circular motion with flashlight.	

SIGNAL	DAY	NIGHTTIME	REMARKS
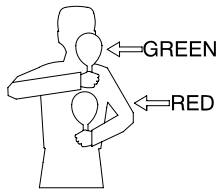 AM PUMPING FUEL	LSO holds green device vertically over red device.	LSO illuminates green wand.	
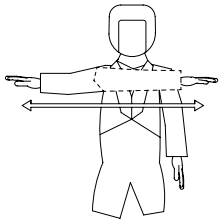 CEASE FUELING	Helo crewmember makes horizontal, throat-cutting motion with right hand.	Helo crewmember makes horizontal motion with flashlight.	
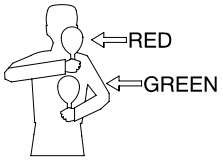 HAVE CEASED PUMPING FUEL	LSO holds red device vertically over green device.	LSO secures green wand.	
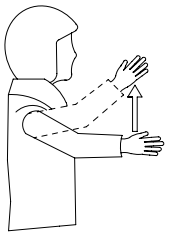 DESIRE TO MOVE OVER DECK AND RETURN HOSE	Helo crewmember makes vertical motion with hand.	Helo crewmember makes vertical motion with flashlight.	
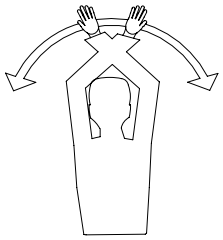 EXECUTE EMERGENCY BREAKAWAY	LSO makes waveoff signal.	Same as day signal with the addition of wands.	Signal is mandatory.

SIGNAL	DAY	NIGHTTIME	REMARKS
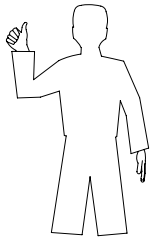 AFFIRMATIVE (ALL CLEAR)	Hands raised, thumb up.	Same as day signal with the addition of wands.	Conforms to ICAO signal.
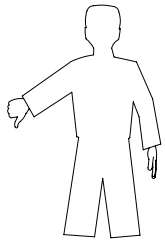 NEGATIVE (NOT CLEAR)	Arm held out, hand below waste level, thumb turned downwards.	Same as day signal with the addition of wands.	
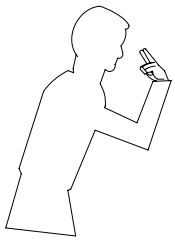 TURN OFF/ON LIGHTS	Points to eyes with two fingers to signal “turn lights off.”	Flashes wands on and off.	Same signal for “turn lights on.”
COME FORWARD (LSO)	Makes sweeping motion with right arm from straight out to across chest.	Same as day signal with addition of wands.	
TALON ENGAGED (PILOT)	Left arm held vertically with fist clenched.	Flashlight moved in a circular pattern.	

SIGNAL	DAY	NIGHTTIME	REMARKS
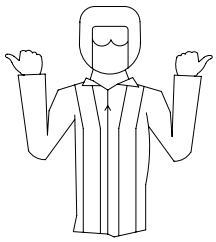 TALON DISENGAGED (PILOT)	Swings arms apart, thumbs extended outwards, at eye level. In single piloted aircraft, pilot may swing one arm alternately from each side, thumb extended outwards.	Using hand-held light or flashlight at eye level, flash light on/off at 1-second intervals.	
TALON ENGAGED (LSO)	Left arm held vertically with fist clenched.	Left arm held vertically with amber wand held in a horizontal position.	
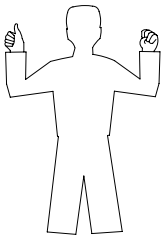 TALON DISENGAGED (LSO)	Hold right thumb at eye level; hold left fist at eye level.	Left arm held vertically with amber wand held in a horizontal position. Right arm held vertically with amber wand held vertically.	
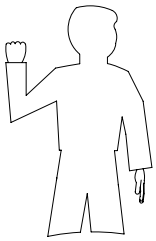 WAIT	One hand, held at eye level, with fist clenched.	Wand, held horizontally at eye level.	

APPENDIX D. Aircraft Pre-Accident Plan

A. INTRODUCTION. Every flight deck-equipped cutter shall have an aircraft pre-accident plan, to be used in the event of an aircraft mishap. The plan shall include individual procedures and responsibilities for key personnel aboard the cutter and should prescribe the specific actions to be taken from initial notification to completion of the mishap investigation. A well-written, well-rehearsed preaccident plan will ensure thorough and efficient rescue and salvage efforts as well as minimize confusion following an aircraft mishap.

B. IN THIS APPENDIX. This appendix discusses the following topics:

1. General Information.
2. Sample Aircraft Preaccident Plan.

C. GENERAL INFORMATION.

1. Objectives. The primary consideration following an aircraft mishap is the safe recovery of personnel.

   The secondary consideration is to effectively preserve all features and evidence at the mishap scene to ensure a complete and accurate analysis by the Mishap Analysis Board (MAB).

2. Scope. The Safety and Occupational Health Manual, COMDTINST M5100.47 (series), establishes the Coast Guard flight safety program and contains general information for its implementation.

   In the event of a Coast Guard aircraft mishap, the cutter nearest to the scene is responsible for initiating rescue and salvage. The pre-accident plan should be implemented upon initial receipt of information of the mishap.

   Even though the aircraft involved may not be assigned to the cutter, timely response will aid in saving lives and assist the MAB in determining the cause of the mishap.

D. SAMPLE AIRCRAFT PRE-ACCIDENT PLAN.

1. Overview. See Appendix D, Table D-1, for a sample aircraft pre-accident plan.

Table D-1. Pre-Accident Plan

Subj: AIRCRAFT PRE-ACCIDENT PLAN

Ref: (a) Shipboard-Helicopter Operational Procedures Manual COMDTINST M3710.2 (series)

(b) Coast Guard Air Operations Manual, COMDTINST M3710.1 (series)

(c) Safety and Occupational Health Manual, COMDTINST M5100.47 (series)

1. Purpose. This plan describes procedures and establishes responsibilities for personnel to ensure the fastest and most systematic rescue efforts possible in case of an aircraft mishap.

The plan also prescribes notification and investigative functions for designated personnel that will produce maximum results without confusion or waste of time.

2. Discussion. The first consideration in any mishap is to remove the injured personnel as quickly as possible. When the rescue (initial response phase) is completed, the recovery of the wreckage and investigation to determine cause (secondary response phase) commences. Therefore, the pre-accident plan is broken into two sections:

(a) Primary response (Crash on deck or ditch at sea)

(1) Officer of the Deck (OOD)

(2) Operations Officer

(3) Aviation Detachment (AVDET) (if aboard)

(4) Health Services Technician or Physician Assistant

(5) Fire Party

(6) Ship's Photographer

(7) Ready Boat Crew/Swimmers

(b) Secondary Response

(1) Operations Officer

(2) Commanding Officer

(3) Executive Officer

(4) AVDET

(5) Engineer Officer

(6) First Lieutenant

(7) Damage Control Assistant (DCA)

(8) Ship's Photographer

3. Action. The specific duties of the personnel listed above are outlined in enclosure (1). The Operations Officer is responsible for the readiness and adequacy of the Pre-Accident Plan. All other miscellaneous duties not covered in this Pre-Accident Plan shall be handled in accordance with the Helicopter Operations Bill in the Ship's Organization Manual and/or the Ship-Helicopter Operations Procedure Manual, COMDTINST M3710.2 (series).

Table D-1. Pre-Accident Plan Continued

I.R. COMMANDING

Encl: (1) Personnel Duties for Aircraft Mishap

PERSONNEL DUTIES FOR AIRCRAFT MISHAP

1. PRIMARY RESPONSE

Procedures listed in this section shall be initiated upon notification of a mishap. The objective is to rescue personnel, (in the event of a crash on deck with fire) control and extinguish the fire, and prevent further injury to personnel or damage to the cutter.

a. Primary Response: Crash on Deck.

(1) OOD.

(a) Sound appropriate alarms and make appropriate pipes to alert all hands that there has been a helicopter crash on deck. Ensure that the on-scene leader and fire party are aware of any ordnance being carried by the aircraft. Activate the pre-accident plan.

(b) Adjust cutter heading to minimize damage from fire and adjust speed to assist fire party in containing the fire. (Make best relative wind for fire fighting on the flight deck).

(c) Ensure that proper log entries are made for each performed evolution.

(d) Make an additional pipe to have all non-billeted personnel for flight ops lay to the appropriate location for possible fire party and/or flight deck personnel augmentation.

(e) Ensure that the ready boat is ready for launch in the event of personnel overboard. (It may be wise to launch the small boat to standby alongside.)

(2) Operations Officer

(a) Activate the Pre-Accident plan.

(b) Ensure that appropriate alarms and/or pipes have been made by OOD.

(c) Ensure that the OSL and fire parties are aware of any ordnance carried by the aircraft.

(d) Ensure that chronological log of events is maintained (include on-scene weather as close to the time of occurrence as possible).

(e) Compile data for completion of initial crash report.

(f) Request assistance from nearest USCG unit or any other resource (if appropriate).

(g) Notify SAR coordinator or operational control (OPCON) of mishap via immediate precedence message or phone patch.

Table D-1. Pre-Accident Plan Continued

(3) AVDET (if embarked) Lay to the flight deck to assist as necessary.

(4) Health Services Technician or Physician Assistant

(a) Report to the hangar or flight deck with medical bag for on-scene first aid.

(b) Ensure treatment for hypothermia is available in the hangar or on the flight deck for firefighters who have gotten wet.

(c) All injured personnel shall be moved away from the immediate crash area (if at all possible) to a safe area for treatment (not necessarily to sick bay initially).

(d) If extra personnel are needed, coordinate through OSL or flight deck phone talker.

(5) Fire Party

(a) The OSL shall direct the rescue crew to proceed immediately to the helicopter to assist personnel with egress in the event there is no fire initially.

(b) The OSL shall ensure that the fire party is ready to attack the fire with charged hoses as soon as possible after the debris settles.

(c) The fire party shall fight the fire as directed by the OSL and in accordance with accepted fire fighting procedures.

(d) If possible, the wreckage is to be left undisturbed for examination upon arrival of the MAB. However, if burning parts endanger the cutter, they may be jettisoned over the side.

(e) The secondary hose team shall be ready to relieve or assist the primary hose teams as directed by the OSL.

(f) The DCA shall monitor and plot the fire's progress. Damage control advice and/or augmentation orders shall come from the DCA.

(6) Ship's Photographer

(a) Lay to the flight deck with photographic equipment.

(b) Take pictures to document all evolutions.

(7) Ready Boat Crew. Boat-lowering detail and boat crew (including cutter swimmer) lay to the boat deck and stand by for directions from the OOD.

b. Primary Phase: Ditch at Sea.

(1) OOD

(a) Immediately turn cutter toward aircraft ditch location; make best speed to the ditch position.

(b) Sound appropriate alarms and make appropriate pipes to alert all hands of the situation. Implement the Pre-Accident plan.

(c) Ensure that proper log entries are made for each performed evolution.

(d) Ensure that appropriate billets are manned.

Table D-1. Pre-Accident Plan Continued

(e) Notify the Health Services Technician or Physician Assistant.

(f) Ensure that the ready boat is manned and ready for launch.

(g) Launch the small boat to effect recovery of the survivors as soon as possible.

(2) Operations Officer

(a) Activate the Pre-Accident plan.

(b) Ensure that appropriate alarms and/or pipes have been made by OOD.

(c) Ensure that chronological log of events is maintained (include on-scene weather as close to the time of occurrence as possible).

(d) Compile data for completion of initial crash report.

(e) Request assistance from nearest USCG unit or any other resource (if appropriate).

(f) Notify SAR coordinator or OPCON of mishap via immediate precedence message or phone patch.

(3) AVDET (if embarked). Assist as directed by the Operations Officer.

(4) Health Services Technician or Physician Assistant.

(a) Report to the bridge for briefing from the Operations Officer.

(b) Discuss with the Operations Officer the best location on board for treatment of the injured personnel.

(c) Ensure that first aid/hypothermia treatment is available immediately upon arrival of injured personnel.

(5) Fire Party.

(a) Stand by for instructions.

(b) When instructed by the OOD, OSL, and primary hose teams, muster in a position on the cutter nearest to the wreckage to fight the fire if needed, or to protect the cutter from fire or explosion.

(c) Maintain communications with the bridge.

(6) Ship's Photographer

(a) Lay to a position, with photographic equipment, above and/or clear of the scene of action where the injured personnel will be brought aboard.

(b) Take pictures to document all evolutions.

(7) Ready Boat Crew

(a) Boat lowering detail and boat crew (including cutter swimmer) lay to the boat deck and stand by for directions from the OOD.

(b) At the direction of the OOD, launch the ready boat, and make best possible speed to the ditch site.

Table D-1. Pre-Accident Plan Continued

(c) Effect rescue of personnel (cutter swimmer shall not enter an overturned or submerged aircraft to rescue personnel).

(d) Return rescued personnel to cutter as soon as possible. Initiate CPR/first aid as necessary en route.

2. SECONDARY RESPONSE.

Procedures listed below shall be initiated immediately after all survivors have been moved away from the crash scene and are receiving treatment. This phase is a followup phase primarily concerned with salvage operations, ensuring that proper procedures are taken, and documenting all events and actions.

a. Operations Officer.

(1) Coordinate security/recovery operations with AVDET, Engineer Officer, DCA, First Lieutenant, and home air station (if possible).

(2) Verify recovery or destruction of any classified materials aboard the aircraft (including keying materials for secure radios).

(3) Ensure that a chronological log of events is maintained.

(4) Prepare preliminary report of aircraft mishap in accordance with Chapter 2 of the Safety and Occupational Health Manual, COMDTINST M5100.47 (series).

(5) Impound pertinent aircrew logbooks, aircraft logbooks, maintenance records, cutter's log, videotapes recorded from the CCTV, and cutter/aircrew training records.

(6) Provide amplifying and followup SITREPs to the original aircraft mishap message as required.

(7) Arrange for transportation (as required) of personnel and equipment.

b. Commanding Officer.

(1) Release the preliminary aviation mishap report (message) within four (4) hours following the mishap.

(2) Make telephone report to Commandant (CG-113) in accordance with Chapter 2, Safety and Occupational Health Manual, COMDTINST M5100.47 (series). This report should contain as much information as possible (injuries, strike damage, adverse publicity, damage to aircraft, etc.). The report should be basically in the same format as the preliminary aircraft mishap report.

c. AVDET (if embarked). Assist in the recovery and salvage operations.

d. First Lieutenant.

(1) Assist in the recovery and salvage operations, coordinating with the home air station as necessary. Ensure personnel are knowledgeable of hazards associated with composite materials as outlined in reference (a).

Table D-1. Pre-Accident Plan Continued

(2) Arrange for heavy salvage or surface assistance as required. If possible, ensure the circuit breaker for the helicopter flight data recorder is pulled to prevent over-recording of essential data for mishap analysis.

(3) Coordinate personnel from all departments for security of the wreckage as required.

e. DCA

(1) Maintain constant reflash watch.

f. Ship Photographer.

(1) Take pictures to document the location and condition of the aircraft.

(2) Include all wreckage and/or damaged components.

APPENDIX E. Coast Guard Helicopter Operating Capabilities

A. INTRODUCTION. This appendix presents the operating capabilities of U.S. Coast Guard helicopters, the H-65 and H-60.

B. IN THIS APPENDIX. This appendix discusses the following topics:

1. H-65 Operating Capabilities.
2. H-60 Operating Capabilities.

C. H-65 OPERATING CAPABILITIES.

1. Overview. Some basic information on the H-65 is provided for guidance and general planning. Data that are more specific can be obtained from the helicopter flight manual and/or the aviation crewmembers that will perform the assigned mission.
2. Air Speed.
   a. The maximum air speed varies from 145 to 150 knots depending upon gross weight.
   b. The maximum sideward or rearward flight is 35 knots.
   c. The normal cruise air speed is 120 to 140 knots.
3. Weights.
   a. The basic weight is approximately 6,600 pounds, not including fuel, cargo, crew, or passengers.
   b. The maximum allowable gross weight is 9,480 pounds and for shipboard operations is 8,900 pounds. However, certain conditions such as high temperature, high humidity, turbulence, high altitude, or flight deck motion may decrease the gross weight for a specific mission.
   c. Normal crew and passenger weight is computed at 200 pounds per person, depending upon the individual and survival equipment required.
   d. Normal mission planning fuel consumption is 600 pounds per hour.
   e. The hoist capacity is 600 pounds. The external cargo sling limit is 2,000 pounds.
   f. The maximum usable payload is approximately 2,300 pounds distributed between the crew, fuel, passengers, and cargo.
4. Capacities.
   a. Fuel tank capacity is approximately 1,900 pounds of JP-5 fuel.
   b. The normal fuel load is between 1200-1500 pounds depending on environmental conditions. JP-5 weighs approximately 6.7 pounds per gallon.
   c. Hot refueling is limited to 1,500 pounds of fuel.
5. Endurance.
   a. Maximum endurance is 3.5 hours.
   b. Normal endurance is approximately 2 hours.

6. Aircraft Rescue and Survival Equipment. Refer to the Coast Guard Air Operations Manual, COMDTINST M3710.1 (series).

7. Temperature and Altitude Restrictions.

   a. The major problems with cold weather operations are the preparation for flight, restricted visibility from blowing snow, icing, and adverse effects on helicopter materials and systems.

      (1) Wind chill on helicopter components cannot be predicted. Moisture, usually from condensation or melted snow, may freeze in critical areas.

      (2) The minimum ambient temperatures can be found in the flight handbook.

      (3) Preheating should be used before starting when temperatures are below prescribed limits.

      (4) Rotor wash and wind will reduce the efficiency of exposed personnel.

      (5) Flight decks may become icy and hazardous.

   b. Helicopter performance at high-density altitudes is greatly reduced.

      (1) Operations requiring other than “transient flight” at altitudes above 10,000 feet should be attempted only after careful consideration of the requirements for the mission.

      (2) The Coast Guard Air Operations Manual, COMDTINST M3710.1 (series), restrictions on flight without oxygen shall be complied with during the flight.

8. Electronics Equipment. Refer to Table E-1.

Table E-1. H-65 ELECTRONICS EQUIPMENT

Type	Frequency Range	Function	Remarks
UHF COMM	225-399.975 MHz	Ship-Helicopter Voice	Line of Sight
VHF-AM COMM	118-155.975 MHz	Ship-Helicopter Voice	Line of Sight
VHF-FM COMM (marine band)	156-173.975 MHz	Ship-Helicopter Voice	Line of Sight
VHF-FM COMM (low band)	30-87.975 MHz	Ship-Helicopter Voice and military band	Line of Sight
HF/AM-SSB COMM	2-29999.9 KHz	Ship-Helicopter Voice	Long Range
VHF-AM NAV	108-117.95 MHz	Navigation	Line of Sight
LF ADF	190-1749.5 KHz	Direction Finder	Line of Sight

Table E-1. H-65 ELECTRONICS EQUIPMENT Continued

TACAN	252 UHF Channels	Navigation	Line of Sight
DF Homer	30-407 MHZ UHF/VHF AM/FM	Helicopter Homing	Line of Sight
IFF Transponder	N/A	Radar ID	Line of Sight
Radar Altimeter	N/A	Helo Altitude Above Ground/Water Level	Up to 2,500 ft AGL/AWL
RNAV (Area Navigation)	N/A	Helo Computer	Navigation and Search
RADAR	N/A	Search, Ground Mapping, and Weather Avoidance	Surface Search Range 0-160 NM
GPS	N/A	Navigation	Search and Navigation
EO/IR (if installed)	IR Spectrum	Passive IR Searching	Line of Sight

D. H-60 OPERATING CAPABILITIES.

1. Overview. Some basic information on the H-60 is provided for guidance and general planning. Data that are more specific can be obtained from the helicopter flight manual and/or the aviation crewmembers that will perform the assigned mission.
2. Air Speed.
   a. The maximum air speed is 180 knots.
   b. Maximum sideward/rearward flight is 35 knots.
   c. Normal cruise air speed is 125 to 145 knots.
3. Weights.
   a. The basic weight is approximately 14,300 pounds, not including fuel, cargo, crew, or passengers.
   b. The maximum allowable gross weight is 21,884 pounds (for Ship-Helicopter use 20,000 pounds). However, certain conditions such as high temperature, high humidity, turbulence, high altitude, or flight deck motion may decrease the gross weight for a specific mission.
   c. Normal crew and passenger weight is computed at 200 pounds per person, depending upon the individual and survival equipment required.
   d. Normal fuel consumption is 1200 pounds per hour.
   e. Hoist capacity is 600 pounds.
   f. The external cargo sling limit is 6,000 pounds.
   g. Maximum usable payload is approximately 7,500 pounds distributed between the crew, fuel, passengers, and cargo.

4. Capacities.
   a. Maximum fuel tank capacity is in excess of 6,400 pounds of JP-5.
   b. Normal fuel load is 3,800 to 4,500 pounds.
5. Endurance.
   a. Maximum endurance is approximately 6 hours.
   b. Normal endurance is approximately 3.5 hours.
6. Aircraft Rescue and Survival Equipment. Refer to the Coast Guard Air Operations Manual, COMDTINST M3710.1 (series).
7. Temperature and Altitude Restrictions.
   a. The major problems with cold weather operations are the preparation for flight, restricted visibility from blowing snow, icing, and adverse effects on helicopter materials and systems.
      (1) Wind chill to helicopter components cannot be predicted.
      (2) Moisture, usually from condensation or melted snow, may freeze in critical areas.
      (3) The minimum ambient temperature can be found in the flight handbook.
      (4) Preheating should be used before starting when temperatures are below prescribed limits.
      (5) Rotor wash and wind will reduce the efficiency of exposed personnel.
      (6) Flight decks may become icy and hazardous.
   b. Helicopter performance at high-density altitudes is greatly reduced.
      (1) Operations requiring other than “transient flight” at altitudes above 10,000 feet should be attempted only after careful consideration of the requirements for the mission.
      (2) The Coast Guard Air Operations Manual, COMDTINST M3710.1 (series), restrictions on flight without oxygen shall be complied with during the flight.
      (3) Missions at high altitude shall be planned for minimum ground time to avoid engine shutdown.
8. Electronics Equipment. Refer to Table E-2.

Table E-2. H-60 ELECTRONICS EQUIPMENT

Type	Frequency Range	Function	Remarks
UHF COMM AM/FM	225-399.975 MHz	Ship-Helicopter Voice	Line of Sight
VHF-AM COMM	118-155.975 MHz	Ship-Helicopter Voice	Line of Sight

Table E-2. H-60 ELECTRONICS EQUIPMENT Continued

VHF-FM COMM (low and marine band)	30-87.975 MHz 156-174 MHz	Ship-Helicopter Voice	Line of Sight
HF/AM-SSB COMM	2-30 MHz	Ship-Helicopter Voice	Long Range
VHF-AM NAV	108-117.95 MHz	Navigation	Line of Sight
LF ADF	190-1799 and 2812 KHz	Direction Finder	Line of Sight
TACAN	252 UHF Channels	Navigation	Line of Sight
UHF/VHF ADF	Same as Radio Used	Direction Finder	Line of Sight
IFF Transponder	N/A	Radar ID	Line of Sight
Radar Altimeter	N/A	Helo Altitude Above Ground/Water Level	Up to 5000 ft AGL/AWL
TACNAV Computer	N/A	Tactical/Nav Solution	NAV and Search Position Fix
GPS Navigation Receiver	N/A	Navigation	Digital LAT/LONG Readout
RADAR	N/A	Search and Weather Avoidance	Range 0-160 NM
EO/IR (if installed)	IR Spectrum	Passive IR Searching	Line of Sight

APPENDIX F. Air Station Deployment Checklist

A. INTRODUCTION. Each air station shall develop and maintain a deployment checklist. District Commanders should strive to notify air stations of upcoming deployment requirements far enough in advance to allow for adequate preparation.

B. IN THIS APPENDIX. This appendix discusses the following topic:

1. Sample Air Station Deployment Checklist.

C. SAMPLE AIR STATION DEPLOYMENT CHECKLIST. A sample Air Station Deployment Checklist follows as Table F-1.

Table F-1. SAMPLE AIR STATION DEPLOYMENT CHECKLIST

A. Pre-Deployment Activities.

1. Assignment of Personnel.
   - a. Deployment formation memo.
   - b. Quality assurance and maintenance release authority letters.
   - c. Pre-deployment training and briefing.
     - (1) Ship-Helo flight procedures.
     - (2) Unplanned operations (i.e., mountain ops, beach ops).
     - (3) Operating area weather.
     - (4) Helicopter navigation.
     - (5) Foreign Clearance Guide.
     - (6) Pertinent sections of the Coast Guard Safety and Occupational Health Manual, COMDTINST M5100.47 (series).
     - (7) Shipboard customs, courtesies, and daily routine, etc.
     - (8) Main rotor blade (MRB) folding and removal. (Mandatory training requirement).
     - (9) Airframe protective cover installation and removal.
     - (10) Traversing (Mandatory training requirement except for deployment on non-hangar equipped cutters).
     - (11) VERTREP and HIFR (nozzle familiarization).
   - d. Orders issued.
   - e. Law enforcement briefing.
   - f. Review aircrew health and vaccination records.
2. Assignment of Equipment.
   - a. NVGs.
   - b. Observer’s flight equipment.
   - c. Gyro stabilized binoculars.

Table F-1. SAMPLE AIR STATION DEPLOYMENT CHECKLIST Continued

d. Camera, video recorder, film, and tapes (as required).

e. Foul and Extreme weather clothing (as appropriate).

f. Fly-away tool kit.

g. HSK.

3. Assignment of Aircraft.

a. Pre-deployment corrosion inspection and control completed.

b. Required hourly and calendar inspections completed.

c. Discrepancies cleared.

d. Fuel packet, charts, and navigational equipment inventories completed.

4. Advance Arrangements with Cutter.

a. Arrival of HSK and personnel.

b. Recovery of helicopter.

c. Arrangements for cutter’s mail.

d. Advise cutter to request "aviation weather" via message from Fleet Weather Services.

e. Confirm that AEL MK I, AEL MK III, and FSII fuel test kits are operational and the required (by AEL) spare items are on the cutter (i.e., sediment and water detection pads).

5. Helicopter Departure.

a. Aircraft movement message.

b. Weight and balance.

c. Orders.

d. CG-4377.

e. Pilot log books.

f. Cutter mail, newspapers, etc.

B. Deployment Activities.

1. Arrival and Departure messages.

2. Add parent unit to daily SITREPs.

3. Inventory aviation equipment.

4. Check the following items onboard the cutter:

a. HSK storage area.

b. Aviation berthing.

c. Aviation workspaces.

Table F-1. SAMPLE AIR STATION DEPLOYMENT CHECKLIST Continued

d. Fuel packet, charts, and navigational equipment inventories completed.

e. JP-5 quantity and condition.

5. Conduct training as required for AVDET and cutter personnel.

6. Reports.

a. Type I material report.

b. Monthly or quarterly abstract of operations data submitted to home unit.

c. Semiannual flight and qualification report.

d. HSK usage report.

e. Cruise report data.

7. Prior to departing the vessel.

a. Orders endorsed.

b. Mess account settled.

c. Make arrangements for HSK and personnel transportation.

d. Complete and obtain DD 1149 for fuel purchases (if necessary).

e. Aircraft departure message.

C. Post-Deployment Activities.

1. Arrival message.

2. Turn in aircraft maintenance records.

3. Turn in camera and video recorder. Submit film and tapes for processing.

4. Debriefing.

5. Travel claims.

6. Submit a post-deployment cruise report, with a copy to Commandant (CG-711, CG-41, CG-1131), and Ship-Helo Branch, ATC Mobile. The exact format of this report is at the discretion of each unit. However, since these reports aid in providing information regarding potential problems critical to future deployments, the following data shall be captured:

a. Aviation Facility support problems.

b. The number of days the aircraft was secured in the hangar. Reasons why the hangar was not used. (Not applicable for WMEC 210 deployments).

c. Policy issues that came up and did not appear clear based on mission tasking.

d. AVDET berthing problems. Did they affect mission completion?

e. Recommendations that could assist future deployments.

APPENDIX G. Air Direction Control Communications Doctrine

A. INTRODUCTION. This appendix provides information on Air Direction Control communications.

B. IN THIS APPENDIX. This appendix discusses the following topics:

1. Normal Procedures.
2. Aircraft Emergency Procedures.
3. Air Direction Control Prowords.

C. NORMAL PROCEDURES.

1. Aircraft Check-In.

a. Communicating certain essential information is required between an aircraft checking in for Positive or Advisory Control and the ship's ADC. This initial communication should be conducted IAW the following format, corresponding to the acronym **PLANET**.

P — Pilot reports souls onboard and fuel state.

L — Location of the aircraft relative to the ship.

A — Altimeter setting. ADC passes the local barometric pressure (in inches of mercury i.e., 29.92).

N — No communications. The ADC passes lost communications instructions to the aircraft.

E — Execute and expect. The ADC passes what type of air control (positive or advisory) to execute and what type of approach (visual or instrument) to expect to the ship.

T — Tell. ADC advises the CIC watch supervisor and/or the OOD that CIC has accepted control of the aircraft and the ETA.

NOTE

These check-in procedures are not required for sorties originating from the cutter. This information will have been passed during the preflight briefing.

b. Procedures.

(1) Within 50 nm of cutter, pilot attempts contact on primary frequency, stating: "[CUTTER CALL SIGN], [AIRCRAFT CALL SIGN], CHECKING IN FOR YOUR CONTROL."

(2) Cutter ADC replies: "[AIRCRAFT CALL SIGN], [CUTTER CALL SIGN], ROGER, SAY STATE AND SOULS."

(3) Pilot: "[HOURS] PLUS [MINUTES] AND [NUMBER OF POB] SOULS."

(4) ADC, after noting the time, fuel state, and POB: "CALL MY FATHER ON CHANNEL [TACAN CHANNEL]."

(5) Pilot: "[MAGNETIC BEARING] FROM YOU AT [DISTANCE MEASURING EQUIPMENT (DME) READING] MILES."

(6) If radar contact established, ADC states: "RADAR CONTACT, ALTIMETER [LOCAL BAROMETRIC PRESSURE]. LOST COMMUNICATION PROCEDURES: IF NO COMMUNICATIONS HEARD FOR OVER FIVE MINUTES, ATTEMPT CONTACT ON THIS CHANNEL. IF NO JOY ATTEMPT CONTACT [SECONDARY CHANNEL]. IF STILL NO JOY, TRACK INBOUND ON THE [AIRCRAFT'S MAGNETIC BEARING] RADIAL, EXECUTE [VISUAL OR TACAN)] APPROACH, OBSERVE DECK STATUS LIGHT FOR FINAL LANDING CLEARANCE. READ BACK ALTIMETER."

(7) Pilot: "ROGER, ALTIMETER [ ]."

(8) ADC: "EXECUTE [POSITIVE OR ADVISORY] CONTROL. EXPECT [VISUAL OR TACAN] APPROACH."

(9) ADC advises the CIC watch supervisor or OOD (as appropriate).

2. Air Traffic Advisories.

a. Aircraft under positive or advisory control shall be advised of all air contacts passing within 10 NM. In high-density air traffic areas, pilots may elect to modify air contact reporting requirements. Timely and expeditious action is essential because of the high relative speed of aircraft.

b. Traffic advisories shall be passed using the format corresponding to the acronym **DDHA**:

D — Direction of the air traffic from the controlled aircraft. This is passed in the "clock" format when the controlled aircraft is on a steady heading and by cardinal compass directions when the controlled aircraft is maneuvering.

D — Distance of the air traffic from the controlled aircraft in nautical miles.

H — Cardinal Heading of the air traffic.

A — Altitude of the air traffic. The ADC shall use the "Angels or Cherubs" format (as appropriate) to report air traffic with an operating Mode C transponder or "Altitude Unknown" if no altitude readout is available.

c. Procedures.

(1) When an air contact is detected and passes within 10 nm of a controlled aircraft, ADC reports: "STRANGER, [ ] O'CLOCK, [ ] MILES, HEADING [CARDINAL HEADING OF AIR TRAFFIC], [ANGELS OR CHERUBS] [ALTITUDE IN THOUSANDS/HUNDREDS OF FEET]," OR "ALTITUDE UNKNOWN."

(2) If the pilot is in visual contact with the air traffic, he/she reports, "TRAFFIC IN SIGHT." Otherwise, he/she shall report, "NEGATIVE CONTACT."

(3) ADC shall maintain a close watch on the air traffic and maneuver the controlled aircraft as necessary to ensure required lateral separation. When the altitude of an air contact is not known, it shall be assumed the same as the controlled aircraft.

NOTE

The Pilot In Command (PIC) may elect to discontinue traffic reports for aircraft operating at or above 18,000 ft above sea level.

3. Aircraft Checkout.

a. The ADC shall pass a recommended heading or bearing for the aircraft and the range of the aircraft's destination (from the aircraft), as well as updating the aircraft's fuel state, before releasing control of a departing aircraft. The format for this procedure is **HPS**.

H — Heading (Steer). The ADC shall pass a recommended heading to the departing aircraft to assist in navigation to its destination and/or to keep the aircraft clear of other air traffic.

P — Pigeons. This proword is followed by the magnetic bearing and distance in nautical miles of the aircraft's destination from the aircraft's current position.

S — State. The ADC shall update the aircraft's fuel state.

b. Procedures.

(1) When departing the area of the cutter and after the aircraft's communications guard has been established with another agency, pilot reports: "DEPARTING YOUR CONTROL. GUARD SWITCHED TO [ ]."

(2) ADC replies "ROGER, HEADING [ ], PIGEONS [ ], MAGNETIC [ ] AT MILES, SAY STATE, OVER."

(3) Pilot replies "STEER [ ] MAGNETIC, [HOURS] PLUS [MINUTES]."

WARNING

THE AIRCRAFT COMMUNICATIONS GUARD SHALL BE MAINTAINED THROUGHOUT THE FLIGHT. IF THE AIRCRAFT DEPARTS THE CUTTER RADAR COVERAGE AREA AND CANNOT TRANSFER ITS GUARD TO ANOTHER AGENCY, THE CUTTER SHALL ESTABLISH FLIGHT FOLLOWING WITH THE AIRCRAFT USING PROCEDURES OUTLINED IN Chapter 7.

D. AIRCRAFT EMERGENCY PROCEDURES.

1. General.

a. In-flight emergencies can range from a simple indicator or redundant system malfunction to catastrophic failures of major components. While major failures demand a great deal of attention from the pilot, particularly in the initial phase, the cutter needs certain essential information in order to provide assistance to the aircraft.

(1) After completing the required initial action and determining that it is safe to communicate, the pilot shall advise the cutter of the situation.

(2) The ADC shall use the format **LINT** to expeditiously obtain the essential information.

L — Location. The ADC shall request the aircraft location from the ship if radar contact has not been established or has been lost.

I — Intentions. The ADC shall ask the pilot to pass intended actions.

N — Needs. The ADC shall ask the pilot what services are needed from the cutter.

T — Tell. The ADC shall immediately advise the CIC supervisor and/or the OOD of the situation and the aircraft's needs.

(3) The ADC may also add **HPS** procedures depending on situation and current doctrine policies.

b. Emergency Procedures.

(1) Pilot, after completing initial required action and establishing safe flight, reports "MAYDAY. [Aircraft call sign] declaring an emergency with [STATE NATURE OF EMERGENCY]."

(2) ADC's response: Aircraft in radar contact: "ROGER. SHIP BEARS [ ] MAGNETIC FROM YOU AT [ ] MILES." AIRCRAFT NOT IN RADAR CONTACT, SHIP'S TACAN OPERATING: "ROGER. CALL MY FATHER, CHANNEL [SHIP'S TACAN CHANNEL]." AIRCRAFT NOT IN RADAR CONTACT, SHIP'S TACAN NOT OPERATING: "ROGER. SAY YOUR CURRENT LATITUDE AND LONGITUDE."

(3) Pilot responds as requested.

(4) ADC: "REQUEST YOUR INTENTIONS, OVER."

(5) Pilot: "INTEND TO [STATE INTENDED ACTIONS INCLUDING COURSE AND SPEED]."

(6) ADC: "ROGER. WHAT SERVICES DO YOU REQUEST FROM ME, OVER."

(7) Pilot: "REQUEST YOU [REQUESTED ACTIONS]."

(8) ADC acknowledges request, provides **HPS** procedures as appropriate, and advises the CIC Watch Supervisor or the OOD.

2. Aircraft Ditching. Some emergencies require the aircraft to be landed immediately. Others, landing on a ship may not be possible due to the approach requirements or landing configuration.

   a. In order to minimize risks associated with water landings, the pilot shall attempt to land into the wind and parallel to the seas.

   b. The ADC shall keep handy at all times the following information:

      (1) Direction of swells, (major waves)

      (2) Seas (minor waves) and wind

      (3) Local barometer reading

   c. If the pilot announces a ditching is imminent, the ADC should pass this information (in the blind, if necessary).

WARNING
THE ADC SHOULD NOT ATTEMPT TO OBTAIN STANDARD LINT INFORMATION WHEN INFORMED OF AN IMMINENT DITCHING.

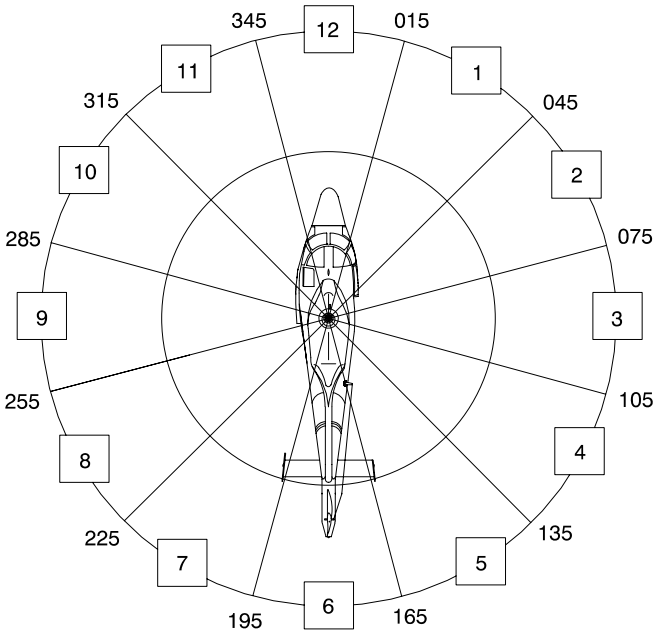

cg9100112a

Figure G-1. Aircraft Clock Format

E. AIR DIRECTION CONTROL PROWORDS. Air Direction Control prowords are provided in Table G-1.

Table G-1. AIR DIRECTION CONTROL PROWORDS

Proword	Meaning
ANCHORED [ ]	Am orbiting at location specified.
ANGELS [ ]	Aircraft altitude (in thousands of feet). Used when aircraft is flying at 1,000 ft Mean Sea Level (MSL) or higher.
BENT	Equipment indicated is inoperative (canceled by OKAY).
BINGO	Proceed or proceeding to alternate or specified field or ship. Traditionally reflects aircraft fuel status.
BUSTER	Fly at maximum continuous speed (or power).
CANDLE	Night illumination device.
CHERUBS [ ]	Aircraft altitude (in hundreds of feet). Used when aircraft is flying below 1,000 ft MSL.
COFFEE BREAK	Scheduled communications period.
ELEVATE	Change altitude to [ ] ft MSL.
EXCITE	Energize specified equipment.
FATHER	TACAN transmitter.
FEET DRY	I am over land.
FEET WET	I am over water.
GADGET	Radar equipment.
HIGH DRINK	Helicopter In-Flight Refueling (HIFR).
MOTHER	Parent ship.
NOCAN	Unable to comply.
NOJOY	I have been unsuccessful or I have no information.
OKAY	Equipment indicated is operative.
ORANGES SOUR	Weather is unsuitable for indicated mission.
ORANGES SWEET	Weather is suitable for indicated mission.
PARROT	IFF Transponder.
PIGEONS [ ] at [ ]	The magnetic bearing and distance of your destination is [ ] degrees at [ ] miles.
POPEYE	I am flying in Instrument Meteorological Conditions (IMC).
SICK	Equipment indicated is operating at reduced efficiency.

Table G-1. AIR DIRECTION CONTROL PROWORDS Continued

STRANGER	An unidentified air contact.
STRANGLE	Switch off equipment indicated.
VECTOR [ ]	Fly magnetic heading indicated (direction of turn from present heading is at the discretion of the pilot).

APPENDIX H. Checklists

A. INTRODUCTION. Many evolutions require accurate reporting and recording of information. Though not all checklists are required, this appendix incorporates checklists that should be referenced when performing the applicable duties.

B. IN THIS APPENDIX.

1. H1- Flight Planning
2. H2- Pre-Flight Briefing
3. H3- FlightCon 1 Launch and Recovery
4. H4- ELVA Voice Reports
5. H5- HIFR
6. H6- HCO VERTREP
7. Figure H-1 - Lifevest Maintenance Record

C. OBJECTIVES. This Manual incorporates many checklists and procedures. This appendix incorporates the most used checklists. These checklists may be reproduced; however, the minimum items listed SHALL not be deleted.

Table H-1. FLIGHT PLANNING SHEET

PITCH: _____° ROLL: _____° LIST: _____ ° P/S MAX ROLL: _____° P/S

LIST SHALL NOT BE ADDED TO ROLL (LIST IS AN ADVISORY ONLY)

LAUNCH POSITION: _____ N/S _____ W/E

SHIP'S COURSE: _____° MAG SHIP'S SPEED: _____ KTS

TRUE WIND: _____° MAG/_____ KTS; REL WIND: _____° REL/_____ KTS

ALTIMETER: _____ CEILING: _____ FT VIS: _____NM Air Temp _____

Water Temp _____ Discernible Horizon _____

FREQUENCIES:

PRIMARY: SECONDARY: TERTIARY:

TACAN CHANNEL: _____

CALL SIGNS: SHIP: _____ HELO: _____ OTHER: _____

TURN POINTS: (LAT/LONG)

1. _____ 2. _____

3. _____ 4. _____

5. _____ 6. _____

7. _____ 8. _____

RECOVERY POSIT: _____N/S _____W/E

REMARKS:

_____

_____

Table H-2. PREFLIGHT BRIEFING SHEET

MISSION OBJECTIVES: _____

Contacts of Interest: _____

RISK ASSESSMENT STATEMENT: _____

Missed grid Procedures: Tiedown / Takeoff and reposition

COMMUNICATIONS:

Frequencies: PRI:_____ SEC:_____ TER:_____

Call Signs: Ship:_____ Helo:_____ Other:_____

Lost Communications Procedure (IAW Chapter 5) or as mission dictates.

_____

EMCON Procedures: _____

Grid/Ref Points: _____

NAVIGATION:

TACAN Channel: _____ Airspace: _____

Method of Flight Following (equipment):

_____

WX: Ceiling: _____, Vis: _____, Baro: _____, Wind: _____° M/_____ KT

Weather Forecast: Air and Water Temperature in patrol area: Air_____Temp_____

Survival Times (Based on forecast weather condition and survival table in Air Operations Manual: _____

Horizon _____, Moonrise _____ Moonset _____, Phase _____

CUTTERS INTENTIONS: Course _____, Speed _____

Estimated Recovery Pos _____ ETA _____

Alternative Landing Sites/resources (places/vessels):

_____

Pilot _____ Copilot_____

FM_____ PAX_____

PAX_____ Fuel in Hours_____

Table H-3. HELICOPTER OPERATIONS CHECKLIST (LAUNCH AND RECOVERY)

DATE: _____ HCO: _____ LSO: _____

PILOT: _____ PAX: _____

RADIO FREQ: PRI: _____ SEC: _____ TER: _____

TACAN CHANNEL: _____

HELICOPTER NUMBER: _____

(Times required in blanks with "X," checks in others)	TAKEOFF	LANDING
FLICON ONE	X _____	X _____
Piped: Unnecessary personnel to cover	_____	_____
Piped: Smoking lamp out on all weather decks	_____	_____
Piped: Watertight hatches secured aft of frame ( )	_____	_____
Loose gear check (hats removed)	_____	_____
TACAN energized	_____	_____
Air search radar activated	_____	_____
FDVS, date time stamp and video recording equipment energized/operational	_____	_____
Communications radios tuned	_____	_____
Lights/shapes/"HOTEL" energized/hoisted as applicable	_____	_____
Flight deck and fantail clear	_____	_____
Secondary tiedowns and strut collars removed	X _____	X _____
TALON grid cover removed (TALON OPS only)	X _____	X _____
All stations manned and ready	_____	_____
CO's permission to commence flight operations	_____	_____
Radio checks complete	_____	_____
Pass certification level, class, qualification level and any applicable waivers to the helicopter. Certification, qualification, and waivers should only be passed on initial aircraft check-in and is not necessary when passing subsequent "numbers" to the same aircraft and crew as long as the certification, qualification, and waivers have not changed.	_____	_____
Numbers passed to helicopter	_____	_____

Table H-3. HELICOPTER OPERATIONS CHECKLIST (LAUNCH AND RECOVERY) Continued

Course (magnetic)	_____	_____
Speed	_____	_____
Pitch	_____	_____
Roll	_____	_____
List (P/S) (Advisory Only. DO NOT add List to Roll)	_____	_____
Missed grid procedures: Tiedowns/Takeoff and reposition	_____	_____
Altimeter (read back required)	_____	_____
Relative wind (magnetic)	_____	_____
True wind (magnetic)	_____	_____
Lat/Long (at launch)	_____	_____
Helicopter airborne/on deck	X _____	X _____
Helicopter “Operations Normal” report	_____	_____
Set FLICON TWO/secure FLICON ONE	_____	_____
Set FlightCon V (secure emissions)	_____	_____
Daily fuel test:	_____	_____
Sediment (<2 mg/L) ____		
Free water (<5 ppm)____		
FSII (0.10-0.15) ____		
Clear and bright satisfactory	_____	_____
Clear and bright result to aircrew within 5 minutes of refueling	_____	_____
Secure fueling detail	_____	_____
Amount of fuel (gallons). Fuel test numbers and clear and bright results passed to the helicopter crew prior to fueling	_____	_____

Table H-4. ELVA Radar Controllers Standard Voice Transmissions

a. (Initial Check-in) This will be a radar-assisted approach. I hold you radar contact on the _____ degree radial, _____ miles from the ship. Altimeter setting is _____. Weather is: (ceiling _____ feet/unrestricted), visibility _____ miles. Final approach heading will be _____ degrees. Relative wind _____ degrees at _____ knots. Maximum pitch and roll are: _____ degrees pitch and _____ degrees roll and _____ degrees list to Port/Starboard. Read back altimeter.

b. (Descend to/climb to/maintain) 400 feet. Assigned heading is _____ (degrees).

c. Lost communications procedures follow: If no transmissions are received for 1 minute in the pattern or 15 seconds on final, climb to and maintain 400 feet. Attempt contact on _____ (secondary frequency). If unable to make contact, squawk 7600 Mode 3. Execute TACAN channel _____ approach commencing at 3 miles and 400 feet on the _____ radial. Acknowledge.

d. Missed approach procedures follow: If ship or wake not in sight at missed approach point, immediately turn left/right 30 degrees, climb and maintain 400 feet, and increase air speed to nine zero (90) knots. Report level and on air speed, and stand by for further instructions. Acknowledge.

e. Perform landing checks. Report wheels down and locked.

f. Turn (right/left) heading _____ (degrees). Maintain 400 feet and slow to seven zero (70) knots.

g. Do not acknowledge further transmissions. On final, 4 miles. Commence gradual rate of descent to arrive at 1/2 mile at 50 feet. Maintain seven zero (70) knots. Assigned heading is _____ (degrees). Report ship in sight.

h. Three and 1/2 miles (left of/right of/on/approaching), center line. Turn (right/left) to _____ (degrees), (or) Assigned heading is _____ (degrees). Altitude should be 350 feet.

i. Three miles (left of/right of/on/approaching), center line. Turn (right/left) to _____ (degrees), (or) Assigned heading is _____ (degrees). Altitude should be 300 feet.

j. Two and 1/2 miles (left of/right of/on/approaching), center line. Turn (right/left) to _____ (degrees), (or) Assigned heading is _____ (degrees). Altitude should be 250 feet.

k. Two miles (left of/right of/on/approaching), center line. Turn (right/left) to _____ (degrees), (or) Assigned heading is _____ (degrees). Altitude should be 200 feet. “HCO CLEARS YOU TO LAND (“STARBOARD-TO-PORT/PORT-TO-STARBOARD” ON SHIPS WITH OBLIQUE APPROACHES) WITH (“TALON”) OR (“PRIMARY TIEDOWNS”), TAKE SIGNALS FROM THE LSO.”

l. One and 1/2 miles (left of/right of/on/approaching), center line. Turn (right/left) to _____ (degrees), (or) Assigned heading is _____ (degrees). Altitude should be 150 feet.

Table H-4. ELVA Radar Controllers Standard Voice Transmissions Continued

m. One mile (left of/right of/on/approaching), center line. Turn (right/left) to _____ (degrees), (or) Assigned heading is _____ (degrees). Altitude should be 100 feet. Slow to four zero (40) knots.

n. One half mile. Assigned heading is _____ (degrees). Maintain 50 feet and four zero (40) knots.

o. 800 yards (left of/right of/on), center line.

p. 600 yards (left of/right of/on), center line.

q. 400 yards (left of/right of/on), center line.

r. 200 yards (left of/right of/on), center line.

s. At missed approach point. If ship or wake not in sight, execute missed approach.

Table H-5. HIFR Checklist

_____ Set FLICON ONE. Alert JP-5 fueling detail.

_____ Set FLICON FOUR.

_____ Fuel tests complete.

Sediment (<2 mg/L) ____ Free water (<5 ppm)____ FSII (0.10-0.15)_____

Clear and bright satisfactory. Report to aircrew within 5 minutes of aircraft departing.

_____ Fuel hose ready on deck. HIFR rig at HIFR “H”.

_____ Safety line attached between last two port side net brackets.

_____ Communications established between flight deck, pump room, and HCO.

_____ Pump room briefed to pass amount transferred in 10-gallon increments.

_____ Manned and ready from flight deck.

_____ FOD walkdown complete.

_____ Inspection by LSO of HIFR rig connection.

_____ Grounding wand attached/electrician’s gloves laid out.

_____ Personnel briefed.

_____ Contact radio, secure emissions from:

_____ All antennas within 25 ft of helo.

_____ All antennas within 50 ft of the helo that transmit 500 watts or more.

_____ All shipboard radar(s) capable of main beam illumination of the helicopter.

_____ Secure fire control radar emissions.

_____ Communications established with the helicopter.

_____ Pass the following to the aircraft:

“CUTTER _____ IS CERTIFIED TO LEVEL _____, CLASS 6 [R] FOR THE _____ [helicopter type]. [NOTE: If Class 6R, pass the following at this time: “FLOW RATE MEASURED AT _____ GALLONS PER MINUTE FOR A 40 FT HOVER RADALT.”] ROTOR AND FUSELAGE CLEARANCES ARE ASSURED ONLY WHEN PICKUP AND RETURN OF THE HIFR RIG IS MADE OVER THE HIFR “H” WITH A MINIMUM WHEEL HEIGHT OF 15 FEET. ACKNOWLEDGE.”

_____ “Numbers” passed.

_____ Results of fuel tests and clear and bright tests passed.

Table H-5. HIFR Checklist Continued

_____ Helo ready to HIFR.

_____ Cutter ready to HIFR. “YOU ARE CLEARED TO HIFR. TAKE SIGNALS FROM THE LSO.

_____ Deck status light GREEN.

_____ Pass fuel amounts from pump room to helo in 10-gallon increments. (No reply desired.)

_____ When JP-5 service pump secure, pass total gallons transferred.

_____ When helo departs — deck status light RED.

_____ Clear and bright results to aircrew within 5 minutes of refueling.

Nighttime HIFR

_____ If requested by pilots, illuminate HIFR heading lights.

_____ Chemlights attached to first 50 ft of hose at 10ft intervals beginning at the hoisting saddle.

******Emergency Breakaway******

During HIFR if an emergency develops an “emergency breakaway” can be initiated by the pilot, HCO or LSO. The LSO gives the emergency breakaway signal, the pilot or HCO calls “BREAKAWAY, BREAKAWAY, BREAKAWAY” on the radio while activating the waveoff lights (daytime only). Compliance is mandatory.

WARNING

IF UNABLE TO OBTAIN A SATISFACTORY CLEAR AND BRIGHT WITHIN 5 MINUTES OF AIRCRAFT CLEARING THE CUTTER, THE AIRCRAFT SHALL BE LANDED AS SOON AS POSSIBLE AT THE NEAREST SUITABLE LANDING SITE. THIS COULD INCLUDE THE CUTTER.

Table H-6. HCO VERTREP CHECKLIST

Load Pickup

_____ Set FLICON ONE (Modified).

_____ Set FLICON THREE.

_____ LSO designates and briefs Hookup Team.

_____ Cargo staged and checked.

_____ FOD walk down.

_____ Hangar extended or retracted per the Helicopter Operation Bill.

_____ Flight deck manned and ready.

_____ Inform helicopter of VERTREP certification status.

_____ Inform helicopter of cargo weight and destination.

_____ Helicopter ready for VERTREP.

_____ Cutter ready for VERTREP.

_____ Clearance: “YOU ARE CLEARED TO HOVER FOR VERTREP. TAKE SIGNALS FROM THE LSO.

_____ Deck status light GREEN (except nighttime operations).

_____ When helicopter departs - Deck status light RED (except nighttime operations).

Load Delivery

_____ Set FLICON ONE (Modified).

_____ Set FLICON THREE.

_____ FOD walk down.

_____ Flight deck clear, manned, and ready.

_____ Helo ready to deliver cargo.

_____ Cutter ready to receive cargo.

_____ Inform helicopter of VERTREP certification status.

_____ Clearance: “YOU ARE CLEARED TO HOVER FOR VERTREP. TAKE SIGNALS FROM THE LSO.

_____ Deck status light GREEN (except nighttime operations).

_____ When helicopter departs - Deck status light RED (except nighttime operations).