U.S. Department of Homeland Security

United States Coast Guard

AIDS TO NAVIGATION MANUAL - STRUCTURES

COMDTINST M16500.25A
NOVEMBER 2005

U.S. Department of Homeland Security
United States Coast Guard

Commandant
United States Coast Guard

2100 Second Street, S.W.
Washington, DC 20593-0001
Staff Symbol: CG-432
Phone: (202) 267-1907
Fax: (202) 267-4788

COMDTINST M16500.25A
NOV 7, 2005

COMMANDANT INSTRUCTION M16500.25A

Subj: AIDS TO NAVIGATION MANUAL - STRUCTURES

1. PURPOSE. This Manual establishes policies, procedures, and criteria for the design and inspection of Short Range Aids to Navigation (ATON) structures.

2. ACTION. Area and district commanders, commanders of maintenance and logistics commands, and commanding officers of headquarters units shall ensure that the provisions of this Manual are followed. Recommendations for changes to this Manual should be directed to Commandant (CG-432).

3. DIRECTIVES AFFECTED. The Aids to Navigation Manual - Structures, COMDTINST M16500.25, is canceled.

4. DISCUSSION. This revision of Aids to Navigation Manual - Structures, COMDTINST M16500.25 reflects the constructive comments that have been provided by the field since the Manual was first published in September 2004. The primary changes are in Chapter 2 (requirements for platforms, guardrails, ladders, and fall arrest systems) and Chapter 4 (requirements for fall protection and operational risk management). Several of the data sheets have also been revised to more clearly reflect the guidance in the Manual.

5. ENVIRONMENTAL ASPECT AND IMPACT CONSIDERATIONS. Environmental considerations were examined in developing this Manual and are incorporated herein.

6. FORMS/REPORTS. Form CG-4094, Shore Station Maintenance Record, and Form CG-6042, ATON Structure Inspection Form, are available in USCG Electronic Forms on Standard Workstation III, and on the Internet at <http://www.uscg.mil/ccs/cit/cim/forms1/welcome.htm>.

/s/
D. G. GABEL
Rear Admiral, U. S. Coast Guard
Assistant Commandant for Engineering and Logistics

DISTRIBUTION – SDL No. 143

	a	b	c	d	e	f	g	h	i	j	k	l	m	n	o	p	q	r	s	t	u	v	w	x	y	z
A													1	1	1	1	1		1							
B	1	1	1		1				1					1	1											
C							1				1			1									1		1	
D				1																						
E																										
F																										
G																										
H																										

NON-STANDARD DISTRIBUTION:

TABLE OF CONTENTS

CHAPTER 1. INTRODUCTION	Page
A. General	1-1
B. Classification of ATON Structures	1-1
C. Roles and Responsibilities	1-2
D. Reference Documents	1-2
CHAPTER 2. DESIGN CONSIDERATIONS	
A. Introduction	2-1
B. Design Overview	2-1
C. Design Responsibilities	2-1
D. Design Factors	2-2
E. Structure Components	2-4
CHAPTER 3. INSPECTION	
A. General	3-1
B. Scheduled Structural Inspection	3-1
C. Field Unit Maintenance Inspection	3-2
CHAPTER 4. CLIMBING SAFETY	
A. General	4-1
B. Climber Training	4-1
C. Requirements for Climbers	4-1
D. Personal Protective Equipment	4-2
E. Fall Protection	4-2
F. Operational Risk Management (ORM)	4-4
G. Pre-Climb Safety Requirements	4-6
H. Conditioning and Mechanics of Climbing	4-7
I. Rescue	4-8

APPENDIX A - Guidelines for Field Unit Maintenance Inspection

APPENDIX B - Data Sheets

APPENDIX C - Climbing Safety and Rescue Equipment

CHAPTER 1. INTRODUCTION

A. General. Aids to navigation (ATON) structures support visual and audible signal equipment in a fixed location and at a design elevation that establishes the geographical range of the aid. Structures are built in a variety of configurations according to the unique geological and environmental conditions of a given location, as well as the specific nature of the signal required. They can range from simple and inexpensive daybeacons to complex and costly offshore lights. Design work, particularly for complex structures, is normally performed by the Civil Engineering Units (CEUs) or via CEU-administered contracts. Construction is carried out via CEU-administered commercial contracts, or in the case of many minor structures, by Coast Guard units such as construction tenders (WLICs), Aids to Navigation Teams (ANTs), or Integrated Support Command (ISC) industrial forces. Design, construction, and maintenance of ATON structures are functions of the Shore Facilities Program, and are funded via the AC&I Waterways program or the AFC-43 program, depending on the nature of the work involved. Guidance for these funding methods is provided in the Civil Engineering Manual, COMDTINST M11000.11 (series) and the Financial Resource Management Manual (FRMM), COMDTINST M7100.3 (series).

B. Classification of ATON Structures. There are currently over 22,000 ATON structures in use Coast Guard-wide. For purposes of definition, and to facilitate planning and discussion, they are grouped into the categories listed below.

1. Major ATON Structures. Major ATON structures are complex in design and construction and usually require significant engineering effort, including geotechnical and hydrographic site analysis. Although there may be similarities in the design of the various types of Major ATON structures, each structure is normally one-of-a kind and specifically tailored to the unique environmental conditions and operational requirements of a given location. Ranges and large offshore lights would be typical examples of Major ATON structures.

2. Minor ATON Structures. Minor ATON structures are relatively simple in design and construction, and are usually made of wood or concrete piles, steel piles, or other steel structural shapes. They can be either lighted or unlighted. The same type of structure or a similar type is built repetitively on a routine basis, and little or no engineering analysis of individual site locations is required. Examples of minor ATON structure types are included in the data sheets at the end of this manual.

3. Lighthouses. A lighthouse structure is an enclosed edifice which houses, protects, displays, or supports visual, audible, or radio aids to navigation. These structures are usually made of granite, brick, cast iron plate, monolithic stone, concrete, or steel. They are often located in an offshore, wave-swept, exposed environment, or on a coastline as a landfall object. In the past, these were manned structures, but almost all have at this point been fully automated. This manual will not address lighthouses. Guidance on lighthouses can be found in several of the documents listed in paragraph 1.D.1.

C. Roles and Responsibilities. There are several Coast Guard activities involved in various aspects of ATON structure design, construction, and maintenance. A brief description of their roles and responsibilities is given below. In addition, numerous stakeholders and customers external to the Coast Guard have an input in the process, such as private and commercial mariners, pilot associations, and government entities at various levels (Federal, state, and local).

1. Commandant (G-OPN). Commandant (G-OPN) is the short range aids to navigation program manager, and establishes administrative and operational policy for this Coast Guard mission area.

2. Commandant (CG-43). Commandant (CG-43) is the engineering support manager for the short range aids to navigation program. This office establishes engineering policy and procedures relevant to ATON structures, equipment, and systems; manages funding for ATON facility construction and maintenance; and oversees the execution of the AC&I Waterways marine construction program.

3. Districts (oan). Districts (oan) identify the operational requirements for a given ATON station and any resulting need for an appropriate structure from which to display its signal. District ATON units build and replace minor ATON structures, and maintain the signal equipment and systems at the structures. ATON units that observe safety and/or structural deficiencies while servicing ATON equipment and systems provide this information to the CEUs to initiate corrective action.

4. Civil Engineering Units (CEUs). CEUs perform engineering design of ATON structures and administer contracts for design and construction services. They perform engineering inspections (or contract for these services), and oversee maintenance and repair activities. They are responsible for establishing climber training requirements and overseeing climber training (see Chapter 4 of this Manual). They purchase structure outfitting equipment and other supplies which become part of the final structure, including piles for WLIC construction activities.

5. Integrated Support Commands (ISCs). ISCs fabricate a variety of ATON hardware used on structures. ISC industrial forces build and replace minor ATON structures.

D. Reference Documents. The following documents contain information which is relevant to ATON structures, and are referenced when applicable throughout this manual.

1. Coast Guard Directives.

a. Operational Risk Management, COMDTINST 3500.3 (series). This instruction standardizes the Coast Guard's Operational Risk Management policy and outlines procedures and responsibilities to implement it.

b. Casualty Reporting (CASREP) Procedures (Materiel), COMDTINST M3501.3 (series). This instruction establishes policy and prescribes procedures for all Coast Guard units to follow when submitting materiel casualty reports (CASREPs).

c. Safety and Environmental Health Manual, COMDTINST M5100.47 (series). This manual promulgates safety and environmental health policies, standards, and guidelines, and defines safety and environmental health responsibilities.

d. Financial Resource Management Manual (FRMM), COMDTINST M7100.3 (series). This manual prescribes Coast Guard financial resource management policy.

e. Coatings and Color Manual, COMDTINST M10360.3 (series). This manual provides guidance on coatings for vessels, buildings, structures, fixed equipment, and aids to navigation.

f. Tower Manual, COMDTINST M11000.4 (series). This manual defines Coast Guard policy and criteria for the preservation, inspection, and maintenance of towers (other than ATON structures).

g. Civil Engineering Manual, COMDTINST M11000.11 (series). This manual establishes the policies and procedures for the management and administration of the civil engineering program. It also provides comprehensive guidance on the execution of AC&I Waterways marine construction projects.

h. Coastal Zone Management, Federal Consistency Procedures, COMDTINST 16004.2 (series). This instruction establishes policy, responsibilities, and procedures for Coast Guard implementation of the Coastal Zone Management Act and other related laws and regulations.

i. Aids to Navigation (ATON) Battery Release Reporting Requirements, COMDTINST 16478.10 (series). This instruction addresses the Coast Guard's responsibilities associated with reporting the discovery of ATON battery sites and sets policy for internal and external reporting.

j. Aids to Navigation Battery Tracking System, COMDTINST 16478.11 (series). This instruction outlines procedures for implementing a standard method of tracking ATON batteries.

k. Aids to Navigation Manual – Technical, COMDTINST M16500.3 (series). This manual contains the instructions and policies governing the selection, installation, and maintenance of equipment for the short range aids to navigation program.

l. Range Design Manual, COMDTINST M16500.4 (series). This manual provides general guidance for the design of two-station ranges as well as specific instructions on the use of a computer program for the detailed design of two-station ranges.

m. Lighthouse Maintenance Management Manual, COMDTINST M16500.6 (series). This manual provides information, principles, policies, and requirements for the maintenance of lighthouses.

n. Aids to Navigation – Administration, COMDTINST M16500.7 (series). This manual promulgates policy and guidance for the administration of the short range aids to navigation program.

o. Automation Technical Guidelines, COMDTINST M16500.8 (series). This manual presents technical philosophies and guidelines which should be used in selecting and designing equipment and systems for automated aids to navigation at lighthouses and ranges.

p. Major Aids to Navigation Preventive Maintenance System Guide, COMDTINST M16500.10 (series). This manual promulgates equipment-specific Preventive Maintenance System (PMS) cards for preventive maintenance of standard lighthouse and range equipment.

q. Alternating Current Aids to Navigation Servicing Guide, COMDTINST M16500.17 (series). This manual is a field guide for Coast Guard personnel who service ATON hardware powered by alternating current.

r. Short Range Aids to Navigation Servicing Guide, COMDTINST M16500.19 (series). This manual is a field guide for Coast Guard personnel who service ATON hardware powered by direct current.

s. Rescue and Survival Systems Manual, COMDTINST M10470.10 (series). This manual contains the information necessary for the proper administration of the unit's rescue and survival systems program.

2. Publications from Other Federal Agencies. Many of the following documents are available on line. Where available, the Internet addresses are provided below.

a. Design of Pile Foundations (EM 1110-2-2906). This U.S. Army Engineering Manual provides foundation exploration and testing procedures, load test methods, analysis techniques, allowable criteria, design procedures, and construction considerations for the selection, design, and installation of pile foundations. (http://www.usace.army.mil/inet/usace-docs/eng-manuals/em1110-2-2906/toc.htm)

b. Pile Construction (FM 5-134). This U.S. Army Field Manual covers pile design, material selection, pile-driving equipment, pile installation, and pile maintenance. (https://134.11.61.26/CD6/Publications/DA/FM/ByPub.htm)

c. Design: Pile Driving Equipment (UFC 3-330-02). This U.S. Army Technical Instruction covers the selection and use of a variety of pile driving equipment and methods. (http://www.hnd.usace.army.mil/techinfo/UFC/UFC3-220-02/UFC3-220-02.pdf)

d. Soil Mechanics (UFC 3-220-10N), and Foundations and Earth Structures (DM 7.02). These two U.S. Navy Design Manuals cover the application of basic engineering principles of soil mechanics in the design of foundations and earth structures. (http://www.wbdg.org/references/pa_dod.php)

3. Federal Regulations. The Code of Federal Regulations (Title 29, Subtitle B, Chapter XVII) contain requirements from the Occupational Safety and Health Administration. Parts 1910 and 1926 of this document, referred to as 29 CFR 1910 and 29 CFR 1926 respectively, include subparts that are relevant to ATON structures.

   a. 29 CFR 1910 – Occupational Safety and Health Standards. This document contains requirements for general industry, including inspection, maintenance, and minor repair of existing structures. Subpart D of this Standard, "Walking - Working Surfaces," contains requirements for guardrails and ladders.

   b. 29 CFR 1926 – Safety and Health Regulations for Construction. This document contains requirements for construction activities, including construction, alteration, and major repair of new and existing structures. Subpart M of this Standard, "Fall Protection," contains design requirements for personal fall arrest systems (PFAS).

4. Publications from Professional Societies.

   a. American Concrete Institute - Building Code Requirements for Structural Concrete (ACI 318). This document contains requirements for the proper design and construction of structural concrete buildings.

   b. American Society of Civil Engineers - Minimum Design Loads for Buildings and Other Structures (ASCE 7). This document gives the requirements for design loads on structures.

   c. American National Standards Institute - Safety Requirements for Personal Fall Arrest Systems, Subsystems, and Components, (ANSI Z359.1-1992 [R1999]). Establishes requirements for the performance, design, marking, qualification, instruction, training, inspection, use, maintenance, and removal from service of connectors, full body harnesses, lanyards, energy absorbers, anchorage connectors, fall arresters, vertical lifelines, and self-retracting lanyards comprising personal fall arrest systems for users within the capacity range of 130 to 310 pounds (59 to 140 kg).

CHAPTER 2. DESIGN CONSIDERATIONS

A. Introduction. This chapter provides general guidance for the design of ATON structures. The information provided herein is not all-inclusive. Specifically, detailed guidance for the engineering design of major ATON structures is beyond the scope of this manual. This is due to the complexity of the work involved, and the need to accommodate specific environmental conditions and operational requirements which are unique to each project. General guidance on structural design theory is available in standard engineering reference works, such as those listed in paragraph 1.D.2. The primary focus of this manual will therefore be on minor ATON structures, although much of the guidance will be applicable in varying degrees to all structure types.

B. Design Overview. Both major and minor ATON structures have basic design characteristics in common. They have a foundation, a platform to hold the signal equipment, and a vertical structural member to elevate the platform above the foundation. The difference between major and minor ATON structures is in the size and complexity of these components. For example, one of the most common minor ATON structure designs in the Coast Guard is the "single pile wood" (SPW). It consists of a preservative-treated wood pile driven into the bottom, with a prefabricated wooden platform mounted on top of the pile to hold the signal equipment. In this case, the pile serves as both the foundation and the vertical structural member for the aid. There are literally thousands of these inexpensive SPWs throughout the Coast Guard. An example of a structure design at the other end of the spectrum would be Ambrose Light in New Jersey. Completed in 1999 at a cost of $4.4 million, this major ATON structure consists of a 73 ton, 80-foot tower supported by a 177-ton tripod jacket structure in 95 feet of water, anchored by 48-inch diameter steel pipe piles extending 175 feet below the mudline. Between these two extremes are a wide range of structure types, the vast majority of which are minor ATON structures in single-pile or multiple-pile configurations. The existing population of ATON structures includes many that may not currently meet the design requirements discussed in this manual. Resources are not available to upgrade all of the structures at once; therefore, a transition period is necessary to move from the current state to the desired state over time. It is the intent of this Manual that new major and minor ATON structures be designed and built in accordance with the guidelines put forth herein. Additionally, legacy ATON structures should eventually be retrofitted to meet the guidelines where feasible.

C. Design Responsibilities. ATON structure designs should be based on sound engineering principles and practices, and the engineering professional should take full advantage of the structural design guides, engineering reference works, and computer design programs that are widely available in the public domain. Examples of Federal publications with guidance relevant to ATON structures are provided in paragraph 1.D.2. Standard designs for minor ATON structures are provided in the data sheets in Appendix B of this manual. Engineering drawings for these designs, when such drawings exist, would be available from the cognizant CEU. With regard to major ATON structures, there are no "standard" designs. However, engineering drawings and specifications for structures that have previously been built would be available for reference from the cognizant CEU. Individuals tasked with the design of ATON structures are strongly encouraged to maintain open lines of communication with

their colleagues inside and outside the Coast Guard to share information on best practices, unique design solutions, and sources of engineering design guidance.

1. Major ATON Structures. The CEUs are tasked with the design of major ATON structures. This design work might be carried out by CEU staff, or contracted out by the CEU to an architect/engineering (A/E) firm.

2. Minor ATON Structures. By definition, there is normally little design work required for minor ATON structures. These aids are often built repetitively, based on standard design configurations of the type shown in the data sheets at the end of this manual. This is especially the case for single-pile and multiple-pile structures built by Coast Guard construction tenders (WLICs) in the East Coast and Gulf Coast regions, which account for a sizeable portion of the Coast Guard's ATON structure inventory. Nevertheless, the engineering design of specific minor ATON structures, when required, is a CEU responsibility. An example would be when structures are required in Districts with no WLIC capability, and construction must be done by contract. The CEU would provide the design, establish the contract for the work, and oversee the construction.

D. Design Factors. The following factors should be considered in the design process, regardless of the size or complexity of the structure in question.

1. Payload. This would include the dead load (power system, signal equipment) and live load (servicing personnel) expected to be on the structure at any given time. The load caused by a vessel tying up to the structure should be considered as well.

2. Weather. Structures shall be designed to resist those wind, wave, and current forces that occur in a design storm for the site location. In general, minor ATON structures should be designed to resist the 10-year storm, and major ATON structures the 50-year storm.

3. Site Location. The design must take into account the depth of water and bottom conditions at the site location. Water depth has a direct effect on wave and current forces, while the bottom type (rock, coral, gravel, sand, clay, or silt) has a significant influence on the stability of the structure and is fundamental to its design. In addition, there may be obstructions on the bottom that could interfere with pile driving and construction: large boulders, underwater cable, submerged wrecks. It may be necessary to perform hydrographic, geotechnical, underwater video, or side scan sonar surveys as part of the design effort if sufficient data is not available about the conditions of the site. An archaeological survey may be required if the site is known to potentially contain historic artifacts. These site surveys would normally be contracted out by the CEU as part of the design process.

4. Ice Conditions. If ice conditions at the site are severe enough to destroy commonly used structures and occur more frequently than the design storm, then a choice would have to be made among one of the following alternatives: (a) use a buoy instead of a structure; (b) consider the structure sacrificial and expect to replace it periodically; (c) specifically design the structure to resist the expected flow and thickness of ice. The alternative

selected would depend on the operational requirements of the site (e.g., whether or not a buoy would be an acceptable substitute for a structure) and the economic realities involved (e.g., the relative cost of maintaining and servicing a buoy station, replacing an ice-damaged structure repeatedly, or building an ice-resistant structure). This decision would normally be made on a case-by-case basis by the District (oan) in partnership with Commandant (G-OPN), and in consultation with Commandant (CG-43) and the cognizant CEU.

5. Operational Requirements. The height of an ATON structure is one of the most important factors in its design. It affects the distance at which the aid may be seen (geographic range), the cost of construction, and the contrast of the aid with the background. Minor ATON structures should have a focal plane height of 15 to 17 feet above mean high water. Specific aids may be raised higher if objects, such as trees or vegetation, would obscure the aid at this recommended height. The focal height of major ATON structures, such as ranges, would depend on the specific operational requirements for the aid.

6. WLIC Capabilities. Coast Guard construction tenders (WLICs) build most of the minor ATON structures in the East Coast and Gulf Coast regions, based on standard designs of the type shown on the data sheets in Appendix B of this manual. However, WLICs could potentially construct more complex structures, if the designs could be made to fall within the capabilities of these vessels. Structure cost could possibly be reduced compared with construction by commercial contractors. Designers should therefore consider the capabilities of the WLIC fleet when developing ATON structure designs for areas where WLICs are available. WLICs typically have the equipment and skills necessary to drive vertical and battered piles made of wood, steel, or concrete. Limitations include the depth of water in which the piles are to be driven. For WLICs, this would generally be a maximum of 20 feet, due to the length of the spuds that must be lowered into the bottom to stabilize the ship (or barge) during the pile driving operation. The length of pile that can be handled is also a consideration. Normally, a 60-foot pile is the maximum length which can be driven in the water depths in which WLICs build aids, due to the vertical height and lifting capacity of their cranes. Be aware that pile lengths may also be limited by commercial transportation restrictions on highways and local roads. Depending on the nature of the design, special training, tools, and onsite engineering supervision may be required.

7. Total Ownership Cost. ATON structures shall be designed to meet the operational requirements while minimizing the total ownership cost of construction and maintenance.

8. Climber Safety. Climber safety shall be a primary consideration in the design of ATON structures. As discussed in the Safety and Environmental Health Manual, COMDTINST M5100.47 (series), it is Coast Guard policy to comply with Occupational Safety and Health Administration (OSHA) standards with regard to ladders, fall protection devices, and other safety features on structures, where practicable. Design guidance is provided later in this Chapter. Guidance for climbers is provided in Chapter 4 of this Manual.

9. Coastal Zone Management. Depending on the location of the structure, requirements of the Coastal Zone Management Act (and related laws and regulations) could be applicable. For guidance, refer to Coastal Zone Management, Federal Consistency Procedures, COMDTINST 16400.2 (series).

E. Structure Components. The following section describes general design requirements for the primary components of ATON structures.

1. Corrosion protection. Materials used on ATON structures (wood, steel, concrete, coatings) should be of a type suitable for long-term exposure to the marine environment. For major ATON structures, the use of cathodic protection systems should be considered on a case-by-case basis.

   a. Wood. Wood members (piles, platforms, ladders) should be pressure-treated with a suitable preservative to extend their natural life. An exception would be if the structure is in a high knockdown area, and it can reasonably be expected that it will be destroyed by a collision within a year or less. In that case, untreated wood is acceptable. Information on wood preservation is available from the American Wood-Preservers' Association (www.awpa.com). Keep in mind that wood preservation is a dynamic area with constantly changing regulations concerning environmentally-acceptable preservatives. When in doubt about the acceptability of a given preservative, consult the cognizant CEU for guidance.

   b. Steel. All steelwork should be coated to prevent corrosion, unless the structure is in a high knockdown area and it can reasonably be expected that it will be destroyed by a collision within a year or less. This coating can be in the form of galvanizing, or through the application of an appropriate paint system. Painting guidance is provided in the Coatings and Color Manual, COMDTINST M10360.3 (series). The Society for Protective Coatings is another source of information on coating industry practices (www.sspc.org). When using steel pipe piles, the interior may be filled with concrete or a steel cap welded to the top to prevent internal corrosion.

2. Foundations.

   a. Piles. The vast majority of ATON structures are built from piles, either single piles or multiple piles, which are driven into the bottom through a variety of methods. They support the structure platform by transmitting loads to the soil in which they are imbedded. Piles are usually made from one of the following materials: wood, steel pipe, steel H-beams, or precast concrete. When using steel pipe pile, the preferred material is straight seam or seamless. If these materials are not commercially available, spiral weld pipe may be considered for use. However, the Coast Guard's experience with spiral weld piles has been that they may rotate while being driven, they are more prone to breakage when driven into hard bottoms than the other types of steel pipe, and they fail under fatigue before the end of the design life. Other materials, including composites and plastics, may be considered for use on a case-by-case basis. The choice of which material to use for a given structure would be based

on a number of factors, including the availability of the material in the required sizes; the nature of the bottom soil in which the piles will be driven; the comparative costs of the various options; the expected design life of the structure; and the capabilities of the platform and equipment available to drive the piles. A detailed discussion of pile foundation design and installation can be found in U.S. Army Field Manual FM 5-134, Pile Construction; U.S. Army Engineering Manual EM 1110-2-2906, Design of Pile Foundations; and U.S. Army Technical Instruction UFC 3-330-02, Design: Pile Driving Equipment. These manuals cover soil mechanics, the physical and performance characteristics of the different pile material types, and pile driving techniques, equipment, and safety procedures.

(1) Single Pile. A single-pile structure should normally be constructed if the minimum penetration required to achieve fixity (where the pile is vertically stable and fixed in the soil) can be attained. Since strength of the pile is not generally the critical factor, the type of pile should be selected on the basis of which has the lowest total ownership cost. In most locations, the resulting choice will be a wood pile. When using single wood pile structures in high knockdown areas, install the tethering system shown on Data Sheet 21 in Appendix B of this manual. For moderate ice conditions or areas with very hard bottom types, single-pile steel structures are very effective. Concrete piles are generally not recommended unless it is determined that a wood pile would not penetrate the specific bottom conditions or that steel is too costly or not easily obtainable. This is because the internal pre-stressed steel reinforcing could be exposed to salt water corrosion if the initial pile driving causes cracks in the concrete. Single pile structures vibrate significantly in areas with moderate to severe current conditions, and should not be used for sensitive electronic installations in those areas.

(2) Multiple Pile. When the penetration required for fixity cannot be achieved, it may be necessary to use a multiple-pile structure. Multiple piles should also be used when there is a need to reduce vibration. The three common types of multiple-pile foundations are described below.

(a) Battered Pile Dolphin. A battered pile dolphin, which is very effective in soft bottom conditions, consists of three or more piles which are driven on an angle to the vertical (a "batter"). This is done in a symmetrical pattern with the piles spread at the bottom and bound together at the top with wire rope or securely fastened with bolts and shear connectors to make as rigid a joint as possible. Because the piles are battered and working with each other, the penetration required for each pile in this type of dolphin is normally two-thirds that required of a single pile in a soft bottom. If the dolphin is located in a high knockdown area, install the tethering system shown on Data Sheet 21 in Appendix B of this manual.

(b) Cluster Pile Dolphin. A cluster pile dolphin consists of three or more piles all driven vertically, with their surfaces in contact with one another and wrapped

tightly together at various heights. The penetration required for each pile in this type of dolphin is normally 25 percent greater than that required of a single pile in a soft bottom. If the dolphin is located in a high knockdown area, install the tethering system shown on Data Sheet 21 in Appendix B of this manual.

(c) Platform Foundation. This type of foundation consists of three or more separate pilings which are driven vertically. The piles are connected by a pile cap that spreads the vertical and horizontal loads and any overturning moments to all the piles in the group. Cross bracings can be added to achieve a more rigid foundation. The majority of these structures are used as foundations for skeleton towers. The vertical dead load of the tower must, therefore, be considered in the design of the foundation. The penetration required for each of the piles for a platform structure should be the same as that required for a single-pile structure. Due to the critical nature of this type of structure, especially when used for ranges, penetration should not be reduced. The lateral spread between each of the vertical pilings must be less than the penetration of each pile. If the minimum required penetration cannot be achieved, at least 75 percent of the minimum required embedment must be achieved and cross bracing is required. For range structures located in areas subject to hurricanes, it is strongly recommended that an additional "center" pile be driven to mark the aid position in the event the structure is destroyed. Ensure that the top of the center pile remains visible above mean high water. Since this pile is not a structural member, it should not be braced to the range structure. Tether the center pile with the system shown on Data Sheet 21 in Appendix B of this manual to ensure that it remains on station if the range structure is destroyed. This will assist the servicing unit in finding the assigned position for rebuilding the structure.

b. Other Foundation Types. In addition to piles, other foundation types are commonly used for ATON structures. These would include posts, spindles, caissons, concrete footings, concrete slabs, steel stakes, and rip-rap.

3. Towers. Welding of towers shall be in accordance with American Welding Society (AWS) guidelines. Many ATON structures include modular skeleton steel towers available off-the-shelf in standard sizes from commercial sources. These shall be installed in accordance with the manufacturer's instructions. When steel towers are installed on the ground (vice on a platform), the legs of the tower shall be mounted on properly designed concrete foundations, and **never** placed directly into the soil. Consult the cognizant CEU for guidance on foundation design.

4. Platforms. Platforms shall be designed to support all the equipment and servicing personnel that might be on the aid platform at one time. When an ATON structure platform is required to be outfitted with guardrails as per paragraph 2.E.5, the platform shall have a surface area of no less than 16 square feet to allow for adequate working space for servicing personnel. Designs for timber or steel platforms shall conform to the

current version of ASCE 7, and provide a safety factor of four. Designs for concrete platforms shall conform to the current version of ACI-318.

5. Guardrails. Guardrails shall be provided along the edges of ATON structure platforms in each of the three situations listed in subparagraphs a. thru c. below. When provided, guardrails shall meet the requirements listed in subparagraph d. below. In addition, ensure that solar panels are installed in such a way that the guardrails do not shade the panels.

   a. Situation 1. Guardrails shall be provided along the edges of all major ATON structure platforms.

   b. Situation 2. Guardrails shall be provided along the edges of minor ATON structure platforms that are positioned over water, are designed or used primarily as a walking or working surface, **and** have one or more of the following characteristics:

      (1) Platform is fifteen feet or greater above MLW level.

      (2) Platform is the foundation for a skeleton tower.

      (3) Platform is on top of a skeleton tower.

      (4) Platform is on a steel pile foundation.

      (5) Structure is situated over rocks or debris that may cause injury to personnel in a fall.

      (6) Structure is situated in less than four feet of water at MLW level.

   c. Situation 3. Guardrails shall be provided along the edges of platforms on minor ATON structures that are positioned over land, are designed or used primarily as a walking or working surface, **and** have one or more of the following characteristics:

      (1) Platform is four feet or greater above lower level; where a lower level is defined as those surfaces to which an employee can fall, including, but not limited to, ground levels, floors, and platforms.

      (2) Platform is on top of a skeleton tower.

      (3) Structure is situated on steep hill or cliff.

   d. Guardrail Design Requirements. Guardrails shall consist of a top rail, intermediate rail, and posts (stanchions), and shall meet the following requirements:

      (1) Top rail shall have a vertical height of 42 inches nominal from upper surface of top rail to the platform.

(2) Intermediate rail shall be approximately halfway between the top rail and the platform.

(3) For wood railings, the posts shall be of at least 2-inch by 4-inch stock spaced not to exceed 6 feet on center; the top and intermediate rails shall be of at least 2-inch by 4-inch stock. If top rail is made of two right-angle pieces of 1-inch by 4-inch stock, posts may be spaced on 8-foot centers, with 2-inch by 4-inch intermediate rail.

(4) For pipe railings, posts and top and intermediate railings shall be at least 1 1/2 inches nominal diameter with posts spaced not more than 8 feet on center.

(5) For structural steel railings, posts and top and intermediate rails shall be made of 2-inch by 2-inch by 3/8 inch angles or other metal shapes of equivalent bending strength with posts spaced not more than 8 feet on center.

(6) The anchoring of posts and framing of members for railings of all types shall be of such construction that the completed structure shall be capable of withstanding a load of at least 200 pounds applied in any direction at any point on the top rail.

(7) Other types, sizes, and arrangements of railing construction are acceptable provided they meet the following conditions:

(a) A smooth-surfaced top rail at a height above platform of 42 inches, plus or minus 3 inches.

(b) A strength to withstand at least the minimum requirement of 200 pounds top rail pressure.

(c) Protection between top rail and platform equivalent at least to that afforded by intermediate rails described above.

6. Ladders. Fixed ladders shall be provided on all ATON structures unless the configuration of the structure or the operational environment in a given location would make a fixed ladder impractical or unsafe. The requirements for the design of fixed ladders are provided in 29 CFR 1910, Subpart D.

a. Ladder Safety Devices. Per the requirements of 29 CFR 1910, Subpart D, ladder safety devices shall be provided on fixed ladders over 20 feet in unbroken length. Although rigid rail systems are generally preferred due to their ease of inspection and maintenance, both rigid rail systems and cable systems are acceptable, provided they meet the requirements of 29 CFR 1910, Subpart D. If a fixed ladder safety device is not provided because the configuration of a given structure or its operational environment would make its use impractical or unsafe, a cage or well as described in 29 CFR 1910, Subpart D shall be used instead.

7. Fall Arrest Systems. Fall restraint systems such as guardrails, ladder safety devices, and work positioning systems are typically the preferred fall protection methods. However, fall arrest is also an acceptable method of providing fall protection on ATON structures. When fall arrest is an intended fall protection system on a new ATON structure, designers shall refer to 29 CFR 1926, Subpart M – Fall Protection for design guidance on anchorages and integration of other fall protection system components.

8. Related Equipment.

   a. Dayboards. Design requirements for dayboards are provided in the Aids to Navigation Manual – Technical, COMDTINST M16500.3 (series). A dayboard shall always be installed in a position that gives it maximum utility. Where feasible, the dayboard should be the dominant component of the silhouette, with the battery box hidden behind it. Dayboards shall normally be installed vertically. When heavy bird fouling on the face of the dayboard is anticipated, it may be installed approximately 5 degrees from vertical, leaning toward the observer. Whenever possible, dayboards shall be mounted on an angle to the channel line. This angle will vary to best suit the particular channel, but for a straight channel line, it should be about 30 degrees. See Figure 1 below.

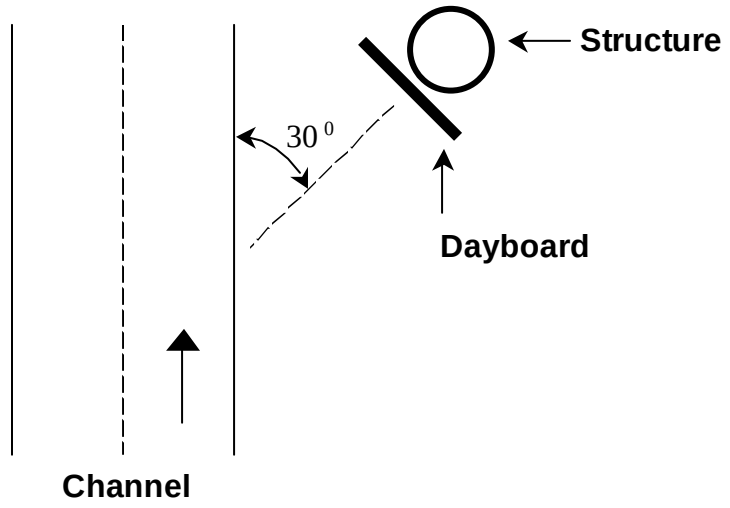

Figure 1 - Dayboard Mounting

This will make the numbers easier to read when the aid is nearly abeam. However, in some circumstances this is not practical, such as with "H" piles or square platforms, in which case the daymark should be mounted perpendicular to the channel line. The method of mounting dayboards is optional and at the discretion of the servicing unit. Nails, U-bolts, J-bolts, corner clamps, and edge clamps are commonly used for attachment. Fasteners shall not pierce the reflective borders or characters, but should

penetrate the colored fluorescent films. The fastenings should be designed so that the dayboard becomes sacrificial in high winds. Ensure that the dayboard is mounted high enough on the structure to avoid damage from waves, tides, and vandalism.

b. Battery Boxes. The standard battery box shown on Data Sheet 18 in Appendix B of this manual is predrilled for a plastic stuffing tube, which shall be installed to keep the box watertight. The battery box shall be installed on the platform, in proximity to the lantern. Refer to the Aids to Navigation Manual - Technical, COMDTINST M16500.3 (series) for the maximum length of power cable allowed between the lantern and the battery box. In high knockdown areas, install the tethering system shown in the data sheet at the end of this manual. Lag screws or machine nuts and bolts are used to secure the battery box to the platform. When mounting the box, allowance should be made for drainage of water under it. The battery box has a snap lid that is normally sufficient to secure the top. At the time of manufacture, however, four pilot holes are drilled through the lip of the battery box top--if necessary, four corresponding holes can be drilled through the lip of the bottom to further secure the top with nylon line. Plastic battery boxes shall not be used as lantern supports. Cables shall not be installed in the screen-covered air vent holes, which are essential for the operation of the batteries and must be protected from the entrance of vermin. The first failure of cable is often due to corrosion of the terminals. Therefore, when installing new lead-in wires, allow about one foot of extra wire inside the battery box. If the lugs or the wire at the terminal require replacement, the cable can then be trimmed a few inches and new lugs installed.

c. Lanterns, Sound Signals, Solar Panels. Preparation and installation shall be as outlined in the Aids to Navigation Manual - Technical, COMDTINST M16500.3 (series).

d. Radar Reflectors. Data Sheet 19 in Appendix B of this manual details the construction of a lightweight dihedral radar reflector for use on structures. It shall be installed when the radar reflectivity of the structure without a reflector does not meet the operational requirements. The range of this reflector is 1.5 to 2.0 miles using a standard radar set, based on mounting the reflector 10 feet above water level. The reflector may be mounted by nailing or bolting it to the structure. It is very important that the angle between the plates be maintained at 90 degrees plus or minus one degree. It is also essential that the reflector be properly oriented to the channel, with the bisector of the angle between the plates (not the edge of a plate) pointed toward the user. This reflector shall not be used as a lantern stand since it is not strong enough to support a lantern. Where greater radar reflectivity is required, a larger reflector of similar design may be mounted either on the structure or below the lantern. If mounted below the lantern, the lantern leveling bolts shall be installed between the lantern stand and the radar reflector to allow the two components to be leveled simultaneously.

CHAPTER 3. INSPECTION

A. General. Periodic inspection of ATON structures is required to ensure the safety of servicing personnel and to protect the Coast Guard's capital investment. These inspections are designed to ensure the structures meet their functional requirements; identify the need for corrective action before advanced deterioration necessitates major repairs; schedule maintenance on a planned basis rather than intermittently; and eliminate both over-maintenance and under-maintenance of the structures. Two levels of inspection are described in this chapter. The first level is called a "Scheduled Structural Inspection." Its purpose is to ensure that certain categories of ATON structures are visited on a regularly scheduled basis by engineering professionals to assess the physical integrity of the structure and initiate action for repair or replacement if necessary. The second level is called a "Field Unit Maintenance Inspection." Its purpose is to provide ongoing monitoring of a structure's physical condition by ATON field units which visit the aid to service the signal equipment.

B. Scheduled Structural Inspection. At least once every five years, every ATON structure in the Coast Guard that meets the definition of "Major ATON Structure" as provided in Chapter 1 of this Manual shall be inspected to evaluate its structural integrity. This inspection shall be carried out by an employee of the cognizant CEU, or by an individual contracted by the CEU to perform this function. This requirement applies irrespective of the size or dollar value of the structure, whether it was designed by a commercial A/E firm or in-house by the CEU, or whether it was built by a commercial contractor or a Coast Guard asset. At the discretion of the CEU, this inspection may also be performed on other ATON structures which have unique structural, historic, environmental, operational, or other characteristics that warrant regularly scheduled engineering assessments. The decision to do so should be made by the CEU in partnership with the District (oan).

1. Inspection Requirements. At a minimum, the Scheduled Structural Inspection shall result in the following:

   a. A determination of whether the physical condition of the structure presents a safety hazard to servicing personnel who climb it.

   b. A determination of whether the physical condition of the structure provides the required function of supporting the ATON equipment.

   c. A compilation of deficiencies and recommendations for immediate and long-term action.

   d. An estimate of the remaining service life of the structure.

2. Documentation of Inspection. The activity which performed the inspection shall document the findings in a written report containing the following information:

   a. Name of the aid and its Aid Number.

b. Date of inspection.

c. Date of last scheduled inspection.

d. Planned date of next scheduled inspection.

e. Inspector's name, title, organizational affiliation, and contact information.

f. Brief description of the structure (type, height, location).

g. List of discrepancies identified and their potential impact on the function, serviceability, and service life of the structure. Note specifically those which pose an immediate safety hazard.

h. Recommendations for action.

i. Estimate of the remaining service life of the structure.

j. Digital photographs showing the condition of the aid, with specific emphasis on any discrepancies found during the inspection.

3. Reporting Requirements. The documentation of inspection with recommendations for action shall be disseminated within the CEU in accordance with CEU-developed administrative procedures. Copies shall be provided to the cognizant District (oan), and to the primary servicing unit. The primary servicing unit shall keep a copy of the documentation in the aid folder.

C. Field Unit Maintenance Inspection. ATON field personnel play an important role in the inspection of ATON structures. The sheer number of structures Coast Guard-wide and their location in remote areas makes the attentive and properly trained eyes of field personnel essential tools for identifying defects and initiating corrective action in a timely manner. During each scheduled visit to an ATON structure, the servicing unit shall perform the Field Unit Maintenance Inspection described herein. This is to ensure the structural integrity of an aid before climbing, and to identify and initiate corrective action for any needed repairs via the Shore Station Maintenance Record (SSMR) process (see below). If the aid appears unsafe, **do not climb**. Generate a Casualty Report (CASREP) message and submit an SSMR to initiate repairs. The CASREP process is described in Casualty Reporting Procedures, COMDTINST M3501 (series).

1. Inspection Guidelines. Detailed guidance for performing a Field Unit Maintenance Inspection is provided in Appendix A of this manual.

2. Documentation of Inspection. Use the ATON Structure Inspection Form, CG-6042, included in Appendix A to document the results of the inspection. Maintain a copy of this report in the aid folder.

3. Reporting Requirements. If repairs to the structure are required that are beyond the capability of the servicing unit, the documentation of inspection with recommendations for action shall be forwarded to the cognizant District (oan). If the condition of the structure so warrants it, a CASREP message shall be generated and/or an SSMR submitted to the cognizant CEU as part of this reporting process. Include digital pictures showing the condition of the aid, with specific emphasis on any discrepancies found during the inspection.

   a. Shore Station Maintenance Record (SSMR). The Shore Station Maintenance Record (SSMR), Form CG-4094, serves to identify, quantify, specify, request, and schedule repairs which are beyond the capability of servicing units. The SSMR process is discussed in the Civil Engineering Manual, COMDTINST M11000.11 (series).

CHAPTER 4. CLIMBING SAFETY

A. General. Personnel safety is paramount for all those involved in climbing ATON structures of any height. No person should get hurt while servicing ATON.

B. Climber Training. Personnel must complete formal, CEU-sponsored climber safety training before being allowed to climb ATON structures, regardless of the height of the structures involved. National Aids to Navigation (NATON) School students who have not completed CEU-sponsored climber safety training may climb ATON training structures under the direct supervision of a NATON school instructor with a current CG climber qualification. Currently, climber safety training is available through a variety of mechanisms. In some Districts, the cognizant CEUs provide the training directly. In others, the CEUs have implemented a "train the trainer" format. While this describes the current situation, the program goal is to have a formal mechanism for climber training standardized throughout the Coast Guard. This is now being studied, and this Manual will be updated to reflect the new mechanism when it is established. Regardless of the source of the training, successful completion should provide the prospective climber with demonstrated competence in the following areas:

1. Recognition and avoidance of dangers.

2. Inspection and use of personal fall arrest equipment.

3. Use of personal protective gear and clothing.

4. Procedures for safely ascending, descending, maneuvering, crossing, positioning, and working on structures.

5. Rescue procedures.

C. Requirements for Climbers.

1. Minimum Qualifications. The minimum requirements to qualify an individual to climb ATON structures are listed below.

   a. The individual must be a responsible volunteer.

   b. The individual must be physically capable.

   c. The unit commander must recommend the individual.

   d. The individual must have written certification to climb ATON structures. This certification shall be issued from the servicing CEU, based on the individual's successful completion of climber training as described in paragraph 4.B above. Once issued, the certification shall be valid CG wide.

2. Buddy System. Climbers shall use the buddy system. When climbing to a height of 150 feet or less, a safety observer is required on the ground. The observer should be stationed a suitable distance away from the structure base, preferably upwind, so that he or she always has a clear view of the climber. The safety observer shall be a qualified climber who meets the requirements of paragraph 4.C.1. The safety observer shall utilize the safety equipment and fall protection as described in paragraphs 4.D and 4.E. The safety observer shall have constant two-way communication with the climber on the structure. When climbing structures greater than 150 feet in height, the safety observer shall join the primary climber on the structure and stay within 150 feet of the primary climber at all times.

D. Personal Protective Equipment (PPE). PPE shall be worn to protect personnel from injury while on or in the vicinity of an ATON structure. This PPE includes a safety helmet with a chinstrap, safety footwear, eye protection, and protective clothing. Recommended protective clothing includes long pants, gloves, and long sleeve shirts. Depending on the work involved or the environmental conditions of the site, hearing protection may be required (see paragraph 4.G.2.c). In addition, a safety helmet is required to be worn by any person within the "drop zone," which is an area whose radius is 1/2 the height of the highest climber on the structure and centered on the structure's axis. When working over or near water, personnel shall wear a personal flotation device (life jacket or buoyant work vest) where the danger of drowning exists. When using the full body harness described below, the vest style Type III personal flotation device (PFD) shall be worn over the body harness. When wearing Type III, anti-exposure coveralls or flotation jacket style PFD, the full body harness shall be worn over the PFD. **Note: Climbing safety harnesses shall not be used with automatically inflating PFDs. Harnesses worn over inflatable PFDs can restrict the outward inflating action and may prevent breathing or cause crushing injuries to the upper torso.** For further information on PFD requirements, refer to the Rescue and Survival Systems Manual, COMDTINST M10470.10 (series).

E. Fall Protection. Fall protection is defined as a means of being protected either by preventing a fall or controlling a fall and reducing the potential injury and trauma. When engaging in maintenance, minor repair or inspection work on an ATON structure at a height of four feet or more above a lower level, climbers shall utilize effective fall protection as necessary to protect against the dangers of falling. When determined to be necessary, fall protection can be achieved by properly employing either of two methods: fall restraint or fall arrest, as described in subparagraphs 1. and 2. below. If a fall restraint system is not in place and fall protection is necessary, the climber must have equipment, training, and responsibility to establish a fall arrest system. It is the intent of this Manual to provide basic guidance on fall protection; however, it is expected that climbers augment the guidance in this Manual with knowledge gained from required climber safety training (see paragraph 4.B) and on the job experience. Determination of necessity and selection of appropriate fall protection solutions may be aided by using the Operational Risk Management (ORM) process as described in paragraph 4.F and by reviewing the fall protection recommendations on the Data Sheets in Appendix B. For additional information on fall protection equipment, Appendix C of this Manual provides lists of personal climbing safety, climbing rescue, and climbing rescue training equipment and the integral and recommended features of this equipment. If

personnel from ATON servicing units have questions or concerns on the necessity for fall protection or on the proper methods of implementing fall protection on a specific ATON structure, unit personnel should contact the cognizant CEU for guidance.

1. Fall Restraint System. A fall restraint system is designed to restrain a worker from reaching an exposed fall hazard. Fall restraint systems include, but are not limited to guardrails, work positioning, and ladder safety devices.

    a. Guardrail System. Guardrails are a conventional method for the prevention of falls from heights and are required on ATON structures platforms meeting the criteria listed in paragraph 2.E.5. ATON structure platforms outfitted with guardrails in accordance with the guidelines set forth in paragraph 2.E.5, satisfy fall protection requirements for personnel working on the platforms.

    b. Working Positioning System. A work positioning system is a combination of equipment that permits the user to have both hands free while being supported on an elevated surface. Work positioning system components include an anchorage system, connection means, and body support as described in paragraph 4.E.2 below. Positioning systems shall not allow for a fall of greater than two feet.

    c. Ladder Safety Device. A ladder safety device, or climbing sleeve, slides up and down a rigid rail or cable and is connected to the front D-ring on a climber's full body harness. Should a fall occur, the device is designed to lock by inertial or cam action to arrest the fall. When ascending or descending a fixed ladder, the climber shall use the ladder safety device whenever a given structure is so equipped. When structures are not equipped with ladder safety devices, or when the climber disconnects from the ladder safety device, the climber shall take care in maintaining connectivity to suitable anchorages on the structure at all times.

2. Fall Arrest System. A fall arrest system is a combination of equipment and components connected together to control a fall once a worker has fallen and stops the fall with minimum impact on the employee. Fall arrest systems consist of an anchorage system, connecting means, body support, and deceleration device. Fall arrest systems shall not allow for a free fall of greater than six feet.

    a. Anchorage System. An anchorage system includes an anchorage point and an anchorage connection. An anchorage point is a secure point on a structure that can withstand forces exerted by fall arrest systems and work positioning systems, depending on the intended use of the anchorage. By considering such factors such as structural member strength and anchorage point position, climbers must use experience and professional judgment to select the safest anchorage points. While anchorage points should be located on the strongest structural members, anchorage locations should be as high as possible to minimize the free fall distance and to prevent any contact with an obstruction or the ground below if a climber falls. For fall arrest and work positioning, the free-fall distances shall not exceed six feet and two feet respectively. The anchor point height shall reflect this restriction. In addition,

anchorage points should be located in such a way to minimize the swinging of the worker (pendulum-like motion) that can occur during a fall. An anchorage connector is the means of securing the anchorage point to the other components of the fall arrest and work positioning systems. The anchorage connector may include a steel cable sling, webbing anchor strap, load-rated eyebolt, and any other device designed and certified to suspend human loads and capable of withstanding forces generated by a fall.

b. Connecting Means. Connecting means is the method used to connect a body support to an anchorage system. A connector is a device used to connect parts of the fall arrest and positioning device systems, and may be an independent component of the system (such as a carabiner) or an integral component of the system (such as a buckle or D-ring sewn into a full body harness or a snaphook spliced or sewn to a lanyard or self-retracting lanyard).

c. Body Support. Body support is a configuration of connected straps secured about the employee in a manner that will distribute the fall arresting forces over at least the upper thighs, waist, shoulders, chest and pelvis, with a means for attaching a lanyard to other components of the personnel fall arrest system. A full body harness is the only acceptable body support device for use in a fall protection system.

d. Deceleration Device. A deceleration device is any mechanism, such as a rope grab, rip stop lanyard, specially-woven lanyard, tearing or deforming lanyards, and automatic self-retracting lifelines/lanyards, that serve to dissipate a substantial amount of energy during a fall arrest, or otherwise limit the energy imposed on an employee during a fall arrest. Deceleration devices shall be connected to the back D-ring of the full body harness.

F. Operational Risk Management (ORM). ATON structure servicing personnel should utilize the ORM process described herein to minimize fall related risk and to maximize the unit's ATON servicing capabilities. For additional guidance in assessing and managing the possible risks involved in a given situation, refer to Operational Risk Management, COMDTINST 3500.3 (series).

1. Step 1: Identify Mission Tasks. In Step 1 of the ORM process, determine mission tasks and review possible methods of task accomplishment. When the mission requires climbing and/or working on a structure at a level that is four feet or higher, the task of climbing and/or working at an elevated height should be evaluated using the ORM process. Pre-climb planning should be included in this step of the ORM process and is discussed further in paragraph G.1 of this chapter.

2. Step 2: Identify Hazards. Using the list of mission tasks, identify the hazards associated with each step of the operation. When identifying a hazard, state what it is and describe the cause of potential exposure to that hazard. Hazards that add risk elements to climbing operations are discussed further in paragraph G.2 of this chapter.

3. Step 3: Assess Risks. Determine individual risk levels for each hazard identified in Step 2. Risk may be assessed by evaluating answers to the following questions regarding each hazard: What are the effects? Can this happen to us? What is the event frequency or degree of involvement? Two models that assess risk for these hazards are Severity, Probability, and Exposure (SPE) and Green, Amber, and Red (GAR) models. For more information on hazard risk assessment tools, refer to Operational Risk Management, COMDTINST 3500.3 (series).

4. Step 4: Identify Options. Starting with the highest risk hazards assessed in Step 3, identify risk control options or safeguards for all hazards exceeding an acceptable degree of risk. Evaluate what options can eliminate unacceptable risk and what options reduce undesirable risk. If necessary, determine if there is a way to modify the mission to reduce risk. When the mission requires climbing and/or working on a structure at a level that is four feet or higher, fall protection options should be evaluated during this step to determine if fall protection is necessary and the safest means to implement fall protection options (see paragraph 4.E).

5. Step 5: Evaluate Risk vs. Gain. Analyze the operation's degree of risk with the proposed controls in place. Determine whether the operation's benefits now exceed the degree of risk the operation presents.

    a. If the risk's costs outweigh the benefits, re-examine the control options to learn whether any new or modified controls are available. If not, inform the next level in the chain of command the mission's risk, based on the evaluation, exceeds the benefit and should be modified. When pre-climb inspection reveals inadequate or questionable structural integrity, modify, cancel, or postpone the mission, do not climb the structure. Submit an SSMR and/or a CASREP message as required (see paragraph 3.C).

    b. If the mission's benefits outweigh the risks, with controls in place determine if the current level in the chain of command can implement all of the controls. If not, find assistance from the next level in the chain of command. In some instances when working on ATON structures, personnel may determine an aid is structurally sound, but the structure lacks an appropriate fall protection system necessary to accomplish the mission without excessive risk to personnel safety. Do not climb the structure. Submit an SSMR and/or CASREP message requesting installation of a proper fall protection system.

    c. When notified of a situation whose risk outweighs benefit, the next level in the chain of command should assist with implementing required controls, modify or cancel the mission, or accept the identified risks.

6. Step 6: Execute Decision. Once the risk control decision is made, implement the best options by allocating the necessary resources and ensuring the controls are in place. Part of implementing control measures is informing the personnel in the system of the risk management process results and subsequent decisions. In addition to being familiar with

the work plan and control measures, when the mission requires climbing and/or working on an ATON structure, every member of the crew should be familiar with the emergency and rescue plans for the site (see paragraphs 4.G.3 and 4.I).

7. Step 7: Monitor Situation. Monitor the situation to ensure the controls are effective and remain in place. Take action when necessary to correct ineffective risk controls and reinitiate the risk management steps in response to new hazards.

G. Pre-Climb Safety Requirements.

1. Pre-Climb Planning. Note the following as it relates to climbing a given structure.

   a. Any special equipment that will need to be acquired and any special training or training reviews that must be performed before work begins.

   b. The skill and experience of each member of the crew assigned to perform the work.

   c. The type of equipment that will be required and the individual worker's training and skill with that equipment.

   d. Any special fabrication required for safety before work begins.

   e. The type of communication that will be used (e.g., voice, radio, etc.).

2. Evaluation of Potential Hazards. Before beginning climbing operations, evaluate the potential hazards that could impact on climber safety. The following are examples of hazards that could impact on climbing operations.

   a. Weather related, such as wind, snow, ice, moisture, lightning, and sunshine. The structure should not be climbed in inclement weather, when electrical storm activity is forecast, or when fog obscures the portion of the structure to be climbed. In locations where fog is usually present and where unacceptable delays would result while waiting for the fog to dissipate, the structure may be climbed provided the climber and safety observer are equipped with reliable two-way radios. Radio checks should be initiated at least every 5 minutes.

   b. Electrical dangers.

   c. Noise. Sound levels above 85 dBA may cause hearing loss. This would be a level of noise that forces you to raise your voice to talk with someone an arm's length away.

   d. Live hazards, such as snakes, birds, insects, rodents, farm animals, other humans.

   e. Conditions related to non-standard structures.

   f. Working elevation.

g. Water depth and bottom type.

h. Inadequate structural integrity.

i. Conditions related to non-standard structures.

3. Emergency Preparedness. Be aware of the following as they relate to the site in question.

a. The emergency services available near the site and whether they could find the site in a timely manner. Question rescue services to establish that they have the equipment, skills, and response time to rescue a climber in the expected environment. These services should be given directions to the site.

b. The location of the nearest medical facilities. Every member of the crew should have access to a route map.

c. The phone numbers of emergency facilities, accessible to all members of the crew. Work at remote locations will require use of cell phones or a means of positive communications.

d. The familiarity of each climber regarding the location and operation of any rescue equipment and location of a first aid kit.

4. Pre-Climb Structural Inspection. Prior to climbing an ATON structure, it is critical to ensure it is actually safe to climb. Use common sense. If a structure appears unsafe to climb, do not climb it. Take corrective action if possible, or initiate a CASREP message and suspend servicing of the structure until safe conditions are restored. Appendix A provides comprehensive guidance on what to look for when assessing the condition of an ATON structure.

H. Conditioning and Mechanics of Climbing. Personal condition is as important as the safety equipment. For safety, you will need physical well-being, emotional conditioning, a well-rested mind and body, and self-confidence. Get plenty of sleep and eat sensibly. Maintain adequate fluid intake.

1. Ascending/Descending. Climbing is a physical process and requires practice to do it correctly. Climbing is not a race. Your goal is to arrive at your work location comfortable, relaxed, and ready to work.

a. To the maximum extent possible, no one should stand around the base of a structure while a person is ascending, descending, or working.

b. Use of a safety climb device requires that you keep three points of contact with the structure. Do not jump or hop.

c. Climb with your legs, not your arms.

d. On tapered structures, climb on the high side or side that allows the climber to naturally lean into the structure.

e. Legs lead on the climb, arms lead on the descent.

f. Rest often and use rest platforms when they are available.

g. Keep body swing to a minimum.

2. Maneuvering. Climbing and maneuvering on ATON structures uses body mechanics that predominately involves the use of the arms and legs. "Look before you leap". Before undertaking any physical maneuver, consider carefully what you are doing. When suspending or descending, use approved descent equipment. If you are in doubt as to how to reach a particular location on the structure or how to perform the task in a location, consult other team members and your supervisor. Consider different physical actions and select the one that best suits your skill, strength, condition, and experience.

3. Crossing and Positioning. Before exiting a safety climb device, you must determine the need for fall protection. You must be continually aware of the location of other climbers and their anchorage points. Do not attach connecting devices to diagonal structural members. Connectors can slide down the diagonal, which increases the fall distance and the potential for physical injury. During the cross to a work area you must maintain 100 percent fall protection, which means 100 percent connection to the structure. The 100 percent connection rule is as effective as your attitude. If you are tired or tense, stop and connect with your positioning lanyard and rest. Climbers are exerting physical energy and can often become over-fatigued. When you are tired, cold, hungry, cramped, or distracted, you are not safe.

4. Working on a Structure. Select a proper structure and wrap your positioning lanyard around the structure so it allows movement of your hands sufficient for the task. A rule of thumb is hold your elbow at your waist and move your arm up and down from chin to lap. If you do not contact the structure, the distance is correct. Be sure that the lanyard is connected and properly locked. **Never trust the sound of the hook or connector.** Visually sight your hardware and ensure that it has closed and is locked. Do not attach safety lanyards to guard rails, hoists, platform gratings, lighting equipment, or any loose equipment on the structure.

I. Rescue. There are five generally accepted rescue techniques, as listed below. Each of these techniques requires specific training and equipment. These techniques must be practiced on a recurring basis, and as such, are considered an integral part of climbing safety training (see paragraph 4.B).

1. Manual rescue. Reaching a fallen worker from the structure and pulling him or her back to the safety of the structure.

2. Outside Services. Professional rescue services should be used when available and if the response time is adequate.

3. Winch Rescue. If a winch is available and rigged, or can be rigged, attach an injured worker to the winch line and lower the victim to the ground.

4. Ascending/Descending Systems. These are manually operated devices that are appropriate to many climbing environments and to one-rescuer operation.

5. Approved Suspension Systems. This is an approved descent and suspension device that can be used to reach a fallen climber and assist the climber to the ground.

U.S. Department of
Homeland Security

United States
Coast Guard

AIDS TO NAVIGATION MANUAL - STRUCTURES

APPENDIX A

GUIDELINES FOR FIELD UNIT MAINTENANCE INSPECTION

COMDTINST M16500.25A
NOVEMBER 2005

TABLE OF CONTENTS

Section	Page
1. Introduction	A-1
2. Timber	A-7
3. Steel	A-14
4. Concrete	A-22
5. Other Construction Materials	A-28
6. Ladders	A-31
7. Other Components	A-33

Attachments

ATON Structure Inspection Form, CG-6042	A-35
Inspection Checksheet	A-37

SECTION 1 - INTRODUCTION

General

The purpose of this Appendix is to provide guidance for field personnel to assess the condition of ATON structures when they visit the aids to service the signal equipment and systems. The goal is to ensure the structural integrity of the aid before climbing, and to identify and initiate corrective action for any needed repairs via the SSMR process. When evaluating the condition of a structure, the following questions should be addressed:

- What is wrong (description and scope)?
- Where is the problem (location)?
- How big is the problem (quantity)?
- When should it be fixed (priority)?

This Appendix provides guidance on what to look for to answer these questions, and includes an Inspection Form for field personnel to fill out and document their findings. This Appendix is divided in several sections, each of which addresses a particular aspect of structures. Each section includes figures and photographs to illustrate the conditions described, and provides checklists to assist field personnel in carrying out the inspections. These checklists are repeated in a condensed version on the Inspection Checksheet at the end of this Appendix for ease of reference during the inspection.

When carrying out these inspections, **do not climb** if an aid appears unsafe. Generate a CASREP message and submit an SSMR to initiate repairs.

Inspection Tools

Have the following items ready for use during the inspection:

- Flashlight

- Digital camera
- Hammers or pick for removing corrosion scale and sounding of structural members
- Shovel, hoe or ice chopper for removing marine growth
- Tape measure
- 2-foot or 4-foot level
- Clipboard and writing instrument
- Sounding line for measuring water depth
- Binoculars
- Wire brush
- Personal Protective Equipment (safety helmets, protective clothing, personal flotation devices)

Preliminary Information for the Inspection

Prior to the inspection, gather the following information as it pertains to the structure in question:

- As-built drawings, photographs, and previous inspection reports.

- Current speed at the structure. Inspect during slack conditions, if possible.

- Tidal range at the structure. Inspect during low or extreme low tide to maximize the area available for inspection. See Figures 1-1 and 1-2.

- Previous water depths and potential for seabed/riverbed scour.

- Other conditions: ice, floating debris, large waves, etc.

Overall Assessment Standards

The following terms should be used to describe the overall condition of the structure when completing the Inspection Form at the end of this Appendix.

- Good. No problems or only minor problems noted. Structural elements may show some very minor deterioration. Structure fully functional.

- Satisfactory. Minor to moderate defects and deterioration observed. Structure fully functional.

- Fair. All primary structural elements are sound, but minor to moderate defects and deterioration observed. Localized areas of moderate to advanced deterioration may be present but do not significantly reduce the function of the structure.

- Poor. Advanced deterioration observed on widespread portions of the structure. Movement of the structure has compromised the function of the aid. Unit should photograph and submit an SSMR.

- Critical. Very advanced deterioration or breakage has resulted in localized failures of primary structural components. More widespread failures are possible or likely to occur. Unit should photograph and submit an SSMR, and initiate a CASREP if necessary.

Arrival Checklist

The following are things to look for at "first glance" when arriving at the structure. The intent is to get an overall impression of the structure's condition, and to ensure the structure is safe to climb before proceeding with the complete Field Unit Maintenance Inspection.

- Ladders. Check ladders for corrosion, broken, bent or missing rungs, loose or failed connections, and malfunctioning fall arrest systems. Is the ladder misaligned? Does the ladder vibrate or move from the current, waves, or when the boat berths against it? Inspect welds for signs of corrosion, cracking, or breakage. If the ladder has been deformed from an impact, then adjacent welds on rungs and mounting brackets may have been cracked. See Photo 1-1.

- Steel members. Check the extent of steel member corrosion in the splash zone. Hammer the surface corrosion (use safety glasses) to remove corrosion byproducts and expose the steel below. Corrosion scale in the splash zone is a hard-layered, rust-colored build-up that swells to about ten times the thickness of the lost steel, often traps water inside, and may hide severe corrosion pitting or holes. Under the hard corrosion scale it is typical to find a layer of black paste-like oxide, just above the pitted gray steel surface. On a 30 to 40 year old structure, the splash zone corrosion scale may be 3/4" to 1" thick. Removal of the corrosion scale does not affect the structural integrity, and may expose severe corrosion defects.

- Connections. Check for bolt corrosion or loosening of bolts as indicated by wear marks from moving members, misalignment of mating surfaces, and by looseness or distortion of structural members. Loose bolts will typically move when hit with a hammer. Standard steel flat washers often will corrode quickly in a marine environment, which may loosen the bolt. If bolt washers move, then there is no tension in the bolt to clamp the fastened members together.

- Alignment. Check horizontal and vertical alignment. Is the fixed aid structure out of plumb? Do any of the piles appear bent or misaligned? See Photo 1-2.

- Bottom Scouring. Is the water under the structure deeper than originally designed, or deeper than reported at the previous inspection?

- Movement. Does the structure vibrate or move when the boat berths against it? Does the structure deflect from wind gusts or waves?

- Impact/Collision Damage. Are there signs of damage caused by vessel impact, ice, logs, or other debris?

Figures

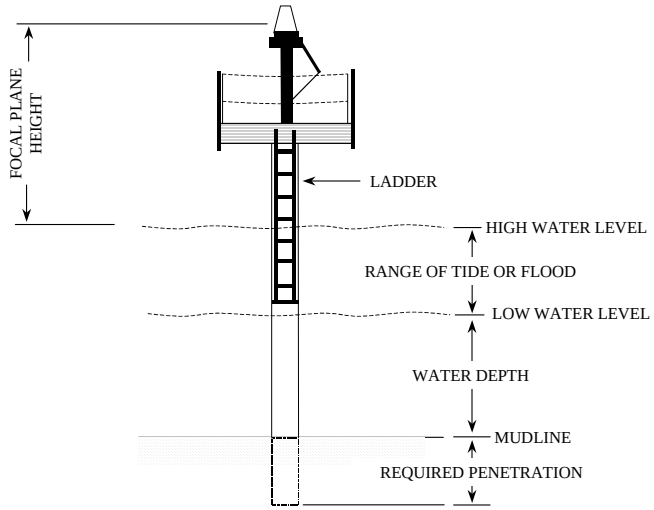

Figure 1-1 - Standard Single-Pile Fixed Aid with 5'x5' ATON Platform

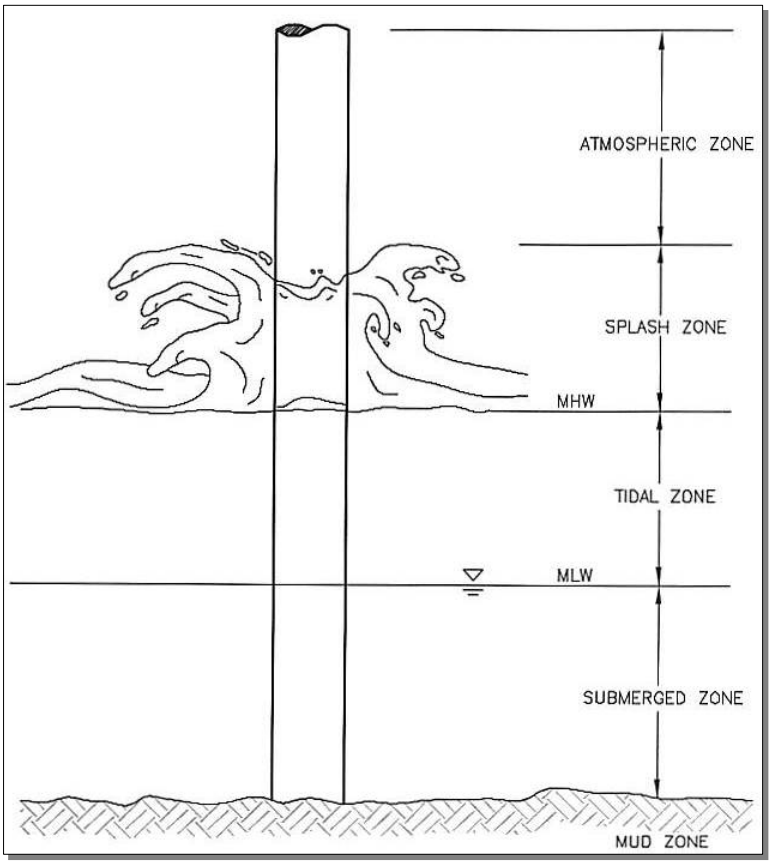

Figure 1-2 - Exposure Zones on Piling

Photos

Photo 1-1 - Bent Ladder

Photo 1-2 - Misalignment

SECTION 2 - TIMBER

General

Timber members have traditionally been used for construction and maintenance of aid structures due to their availability, economy, and ease of handling relative to other construction materials. Timber damage is caused by:

- Fungal rot/decay (see Figure 2-1).
- Marine borer and insect attack (see Figure 2-2).
- Connector corrosion and bolt loosening.
- Abrasion (see Figure 2-3).

Inspection Checklist

a. Check the tops of piles for physical damage, dry rot, and termite or pest infestation and determine the depth of deterioration. See Photo 2-1.

b. Check for cracked, rotted, loose, or worn piles or connecting braces. See Photos 2-2 and 2-3.

c. Check pile and mast alignment. If the aid is a multi-pile structure, are the piles angled toward each other evenly? Is the mast out of plumb? See Photo 2-4.

d. Visually examine piling in the tidal zone for marine borer damage. The tidal zone is the area between high and low tide and is likely to be the most damaged. See Photos 2-2 and 2-5.

e. Sound the piles with a hammer and carefully probe with a thin-pointed tool such as an ice pick to look for internal decay and soft timber.

f. Check for member damage due to overload or impact. See Photo 2-6.

g. Clear a section of the structure of all marine growth and visually inspect for surface deterioration.

h. Check for corrosion of steel fasteners, including bolts, drift pins, and wire rope. Steel fasteners embedded in wet timber usually corrode faster inside the timber, which may not be apparent from visual inspection. Strike the bolt ends with a hammer to check for internal corrosion failure. Wire rope is often used to wrap timber pile cluster structures to hold the pile heads together. This wire rope typically corrodes internally at a faster rate than externally and may be structurally compromised even when the exterior of the wire appears only lightly corroded.

Condition Rating

Use Figure 2-4 to determine the overall condition rating of timber piles, and indicate this on the Inspection Form at the end of this Appendix.

Figures

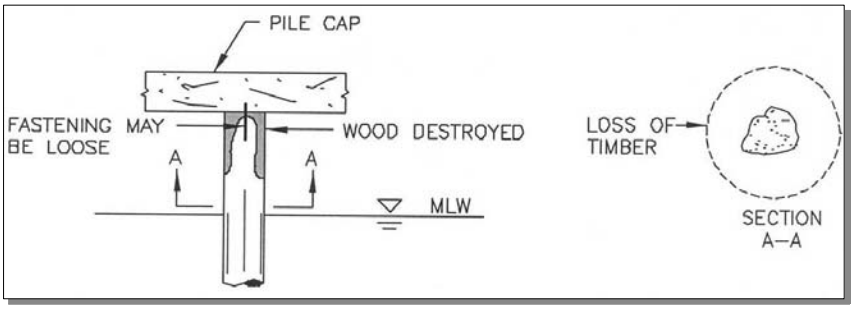

Figure 2-1 - Typical Rot and Fungi Damage to Timber Piles

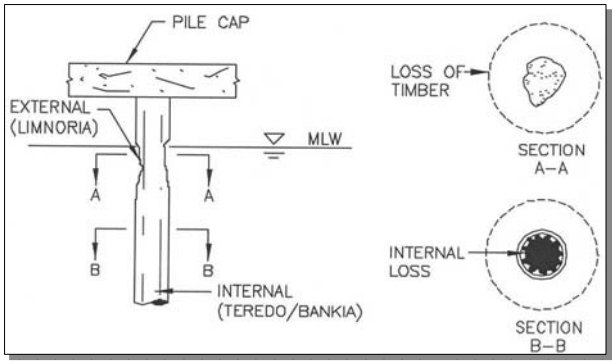

Figure 2-2 - Typical Marine Borer Damage to Timber Piles

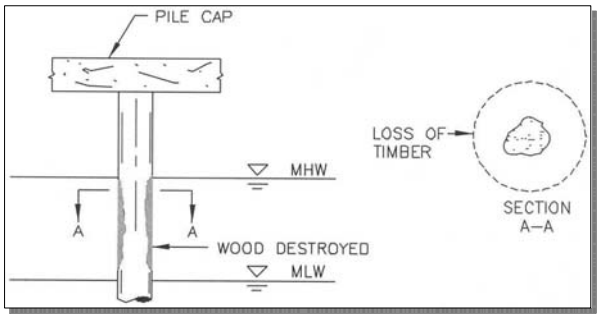

Figure 2-3 - Typical Abrasion Damage to Timber Piles

Figures (cont.)

TIMBER PILES

TIMBER PILE CONDITION RATING	EXPLANATION
NI	NOT INSPECTED, INACCESSIBLE OR PASSED BY
1	NO DEFECTS: – Less than 5% lost material – Sound surface material – No evidence of borer damage
2	MINOR DEFECTS: – 5–15% lost material – Sound surface material – No evidence of borer damage – Minor abrasion damage
3	MODERATE DEFECTS: – 15–45% lost material – Significant loss of outer shell material – Evidence of borer damage – Significant abrasion damage
4	MAJOR DEFECTS: – 45–75% lost material – Significant loss of outer shell and interior damage – Evidence of severe borer damage – Severe abrasion damage
5	SEVERE DEFECTS: – More than 75% lost material – No remaining structural strength – Severe borer damage

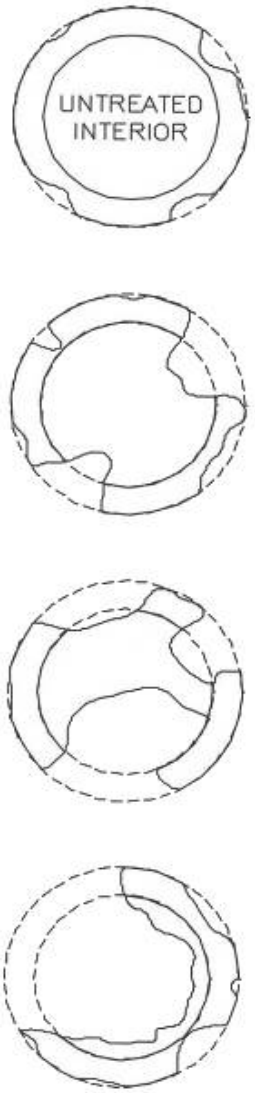

NOTE: Explanation of defect should be placed in the comments column.

Figure 2-4 - Condition Rating of Timber Piles

Photos

Photo 2-1 - Fungal Rot of a Timber Pile

Photo 2-2 - Marine Borer Deterioration of Bracing and Pile in the Tidal Zone

Photos (cont.)

Photo 2-3 - Deterioration of Longitudinal Wale

Photo 2-4 - Structure Alignment Problem

Photos (cont.)

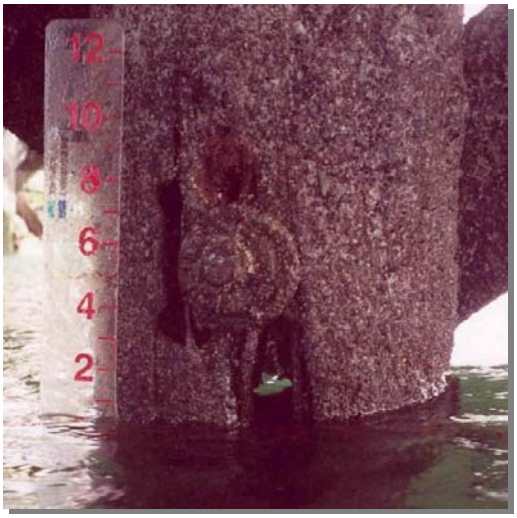

Photo 2-5 - Marine Borer Damage at Bolt Hole

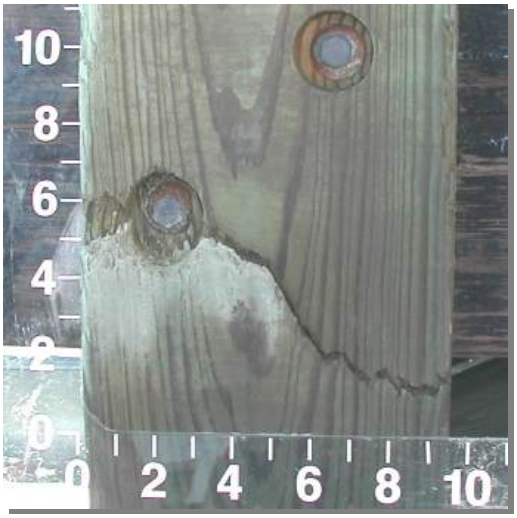

Photo 2-6 - Impact damaged timber

SECTION 3 - STEEL

General

Steel is used in the construction of ATON structures due to ease of connection, fabrication, and splicing, ductile behavior, and the ability to drive steel piles through hard soil. There are six major types of steel structure deterioration to watch for in the marine environment:

- Corrosion and coating loss (see Figure 3-1).
- Abrasion.
- Loosening of structural connections, missing bolts.
- Fatigue (broken or cracked welds).
- Overloading.
- Loss of foundation material.

Inspection Checklist

a. Check for corrosion evidence: rust, scale, and holes, especially in the splash zone and at extreme low water level. See Photos 3-1, 3-2, and 3-3.

b. Check the extent of steel member corrosion in the splash zone. Hammer the surface corrosion (use safety glasses) to remove corrosion byproducts and expose the steel below. See Photo 3-4.

c. Check for deformation, distortion, or deflection. See Photo 3-5.

d. Check for abrasion of steel structures as indicated by a worn, smooth, or polished appearance.

e. Inspect welds for signs of corrosion, cracking, or breakage. See Photo 3-6.

f. Inspect coating for any peeling, blistering, etc. See Photo 3-7.

g. Check for loss of foundation material and/or scour.

Condition Rating

Use Figure 3-2 to determine the overall condition rating of steel piles, and indicate this on the Inspection Form at the end of this Appendix.

Figures

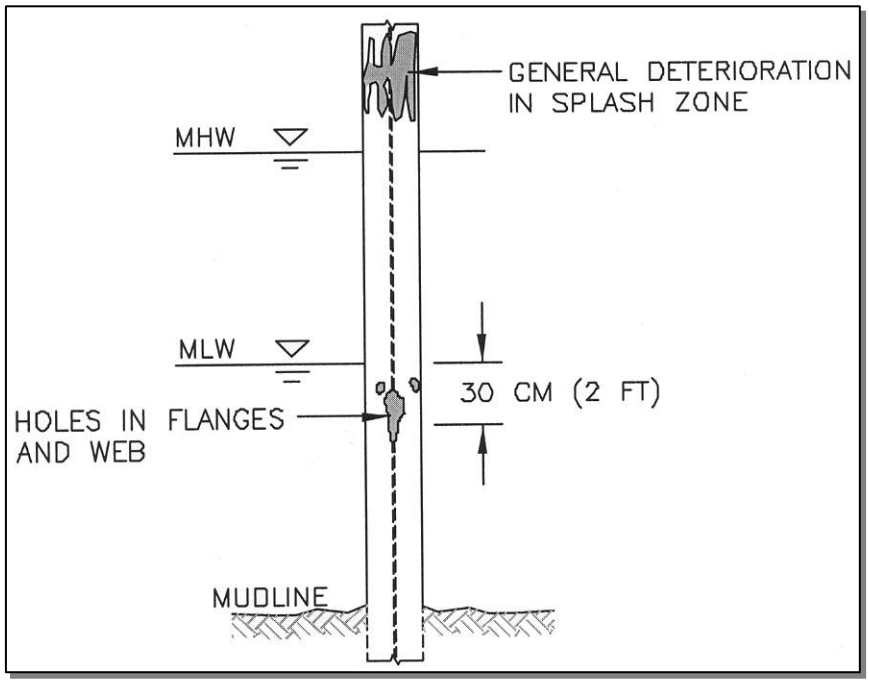

Figure 3-1 - Advanced Corrosion in Steel H-Pile

Figures (cont.)

STEEL PILES

STEEL PILE CONDITION RATING	EXPLANATION
NI	NOT INSPECTED, INACCESSIBLE OR PASSED BY
1	NO DEFECTS: – Sound surface material – Less than 10% coating deterioration – No evidence of surface rust or pitting
2	MINOR DEFECTS: – Light surface rust – 10–20% coating deterioration – Light pitting
3	MODERATE DEFECTS: – Rust that is loose and flaking with some pitting – Scaling can be removed with some effort by the use of a scraper or chipping hammer – Element exhibits measurable but not significant loss of section
4	MAJOR DEFECTS: – Widespread coating deterioration – Scaling removal requires increased effort by use of a scrapper or chipping hammer – Element exhibits increased loss of section
5	SEVERE DEFECTS: – Heavy, stratified rust or rust scales with extensive pitting – Removal requires exerted effort and may require mechanical means – Significant loss of section

NOTE: Explanation of defect should be placed in the comments column.

Figure 3-2 - Condition Rating of Steel Piles

Photos

Photo 3-1 - Severe Corrosion at MLW

Photo 3-2 - Diagonal Bracing, Corrosion Hole

Photos (cont.)

Photo 3-3 - Severely Deteriorated Wale (Note knife edge flange)

Photo 3-4 - Severely Corroded Steel Framing

Photos (cont.)

Photo 3-5 - Vessel Impact Damage to a Fixed ATON Structure

Photo 3-6 - Broken Weld

Photos (cont.)

Photo 3-7 - Coating Deterioration in the Splash Zone

SECTION 4 - CONCRETE

General

Reinforced concrete is a construction material for ATON structures due to its relatively low cost and durability. The durability of concrete in the marine environment is highly dependent on the quality of concrete mix used. It is not unusual to find relatively new concrete structures in poor condition, while adjacent older structures are in better condition. Deterioration of concrete appears in the following forms:

- Corroded steel reinforcing (see Figure 4-1).
- Abrasion wear, which is usually only significant in poor quality concrete (see Figure 4-2).
- Chemical deterioration accelerated by continuous exposure to saltwater, causing soft friable concrete (which can be pulled apart by hand or with hand tools), or spalling and/or cracking with rust stains, which usually indicates the reinforcing steel is corroding.
- Overloading damage as noted by cracking, spalling, or concrete breakage.
- Shrinkage cracking.

Inspection Checklist

a. Inspect for cracks, spalling, corrosion of reinforcing steel, and visual signs of rust staining. Solid reinforcing bars are much more tolerant of corrosion than are prestressing strands (embedded high strength wire cable). See Photos 4-1, 4-2, and 4-3.

b. Check for evidence of chemical deterioration, abrasion wear, and overload damage. See Photo 4-4.

c. Sound the piling with a hammer to detect any loose layers of concrete or delaminations.

- A sharp ringing noise indicates sound concrete.

- A soft surface will be detected, not only by a sound change, but also by the change in rebound, or feel, of the hammer.

- A thud or hollow sound indicates a delaminated layer of concrete, most likely due to the corrosion expansion of internal reinforcing steel. Loose delaminated concrete may be removed to inspect the extent of reinforcing corrosion below.

Condition Rating

Use Figure 4-3 to determine the overall condition rating of concrete piles, and indicate this on the Inspection Form at the end of this Appendix.

Figures

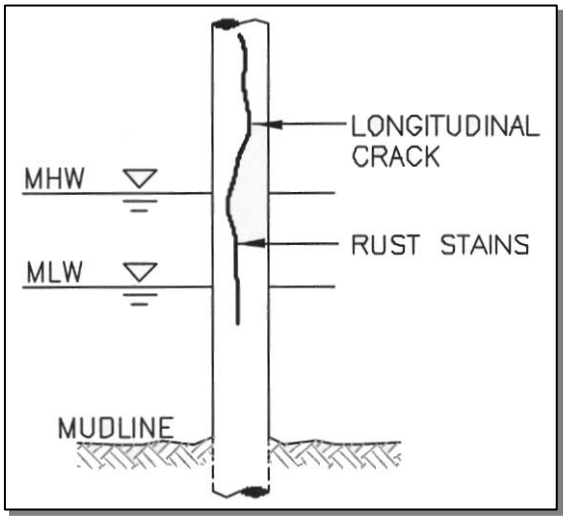

Figure 4-1 - Typical Corrosion Damage to Concrete Piles

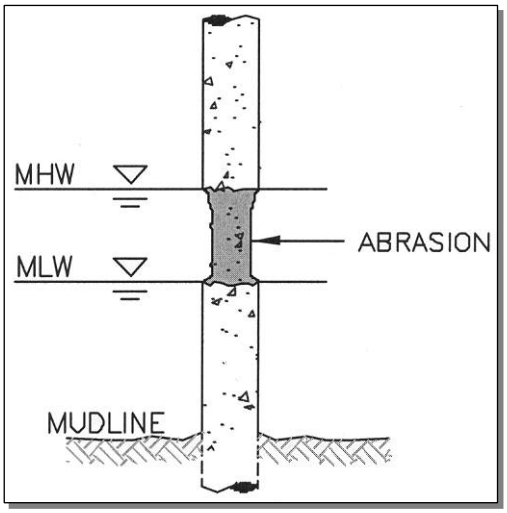

Figure 4-2 - Typical Abrasion Damage to Concrete Piles

Figures (cont.)

CONCRETE PILES

CONCRETE PILE CONDITION RATING	EXPLANATION
NI	NOT INSPECTED, INACCESSIBLE OR PASSED BY
1	NO DEFECTS: – Hairline cracks – Good original surface, hard material
2	MINOR DEFECTS: – Good original surface – Minor cracks or pits – Small chips or popouts – Slight rust stains – Hard material, sound – Corrosion of the wires
3	MODERATE DEFECTS: – Limited spalling of concrete – Minor corrosion of exposed re–bar – Rust stains along re–bar – Softening of concrete – Reinforcing steel ties exposed – Popouts or impact damage
4	MAJOR DEFECTS: – Spalling of concrete results in (10–15%) loss – Large spalls six inches or more in width or length – Deep wide cracks along re–bar – Major rust stains along re–bar – Wide spread surface disintegration
5	SEVERE DEFECTS: – Exposed re–bar with 50% loss of steel section area – More than 15% loss of concrete

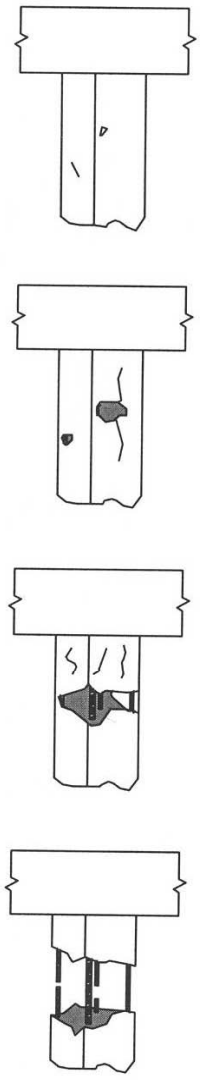

NOTE: Explanation of defect should be placed in the comments column.

Figure 4-3 - Condition Rating of Concrete Piles

Photos

Photo 4-1 - Rust Staining of Concrete Pile

Photo 4-2 - Vertical Crack and Spall

Photos (cont.)

Photo 4-3 - Vertical Cracking in Tide Zone

Photo 4-4 - Failed Repair with Exposed and Corroded Reinforcing

SECTION 5 - OTHER CONSTRUCTION MATERIALS

General

In addition to timber, steel, and concrete, other types of materials may be incorporated in ATON structures. These include stone masonry, aluminum, fiberglass, plastics, and rubber. This section describes the common signs of deterioration in these materials, and provides checklists for use in the Field Unit Maintenance Inspection.

Masonry

Stone masonry structures can be built using many different types of stone block configurations and using irregular or rectangular cut stone blocks (see Photo 5-1). Precast concrete block masonry is typically built using rectangular blocks which may or may not be reinforced. The blocks may be connected with iron or steel dowels or large "staples," and the corrosion of the connecting dowels may allow blocks to fall out of the structure. The joints between blocks may be left open (called dry masonry construction) or may be mortar filled (pointed joints).

a. Check for missing or displaced blocks, usually due to mortar deterioration, loss of wedging stones, or corrosion of iron/steel dowels between blocks.

b. Check for wall movement, usually noted by a portion of the masonry structure having vertical and/or horizontal misalignment which varies from the design drawings or adjacent portions of the structure. Is a portion of the originally straight wall bowing outward? Has a portion of the structure settled?

Aluminum

The use of aluminum in ATON structures is usually for secondary portions of the structure, such as platforms, marker masts, solar panel mountings, and guard railings.

a. Check for corrosion, particularly if the aluminum is in direct contact with steel, concrete, or mortar. Aluminum should be separated from these other materials, typically using plastic spacers.

b. Check for abrasion and wear. Aluminum is much softer than steel, and will wear if subject to rubbing with other objects.

c. Check for cracked welds. The welded connections on aluminum structures are prone to cracking (see Photo 5-2).

Fiberglass

Many structural shapes, ladders, and gratings are available in fiberglass composites which can be well suited to ATON structures.

a. Check for broken members. Fiberglass is prone to impact damage, particularly in extremes of hot and cold weather and with aging after prolonged UV exposure.

b. Check for loose connections. Fiberglass members are usually connected together using stainless steel bolts, which can loosen over time.

c. Check for damage to the surface finish. Weathering and ultraviolet light (UV) can degrade the surface finish, which can cause fiberglass splinters to develop and present a hazard for servicing personnel.

Plastics

Various grades of polyethylene plastics are used in ATON structures. These may be in the form of sheets attached to the boat fendering of the structure, or polyethylene plastic piles and dimension "lumber", with or without internal reinforcing. The internal reinforcing is now mostly fiberglass rebar or fibers, though internal steel reinforcing has been used as well.

a. Check for broken or damaged members. Plastic are prone to impact damage, particularly in extremes of hot and cold weather and with aging after prolonged UV exposure.

b. Check for cracking. This can result from the manufacturing process itself, or by corrosion of embedded reinforcing steel.

c. Check for loose bolted connections.

Rubber

There are several types of rubber that are often used in boat fendering on ATON structures. The rubber will degrade over time after prolonged UV, ozone, and petroleum exposure. Ozone and UV will result in a hardened surface and rubber cracking with age. Petroleum exposure will swell and soften many types of rubber. The rubber deterioration should be monitored with each inspection, and the parts replaced when damaged.

a. Check for rubber deterioration--hardening, cracking, swelling, softening.

Photos

Photo 5-1 - Stone Foundation Aid

Photo 5-2 - Cracked Weld

SECTION 6 - LADDERS

General

Ladders are common to all types of ATON structures. Ladders are vital for servicing personnel to access the structure, and must be maintained in a safe condition. **Do not climb a ladder if it appears unsafe.**

Inspection Checklist

a. Check horizontal and vertical alignment. Is the ladder misaligned?

b. Does the ladder vibrate or move from the current or waves, or when the boat berths against it?

c. Are there signs of damage caused by vessel impact, ice, logs, or other debris?

d. Check ladders for corroded, broken, bent, or missing rungs.

e. Check for corroded, loose, or failed connections. Loose bolts can be indicated by wear marks from moving members, misalignment of mating surfaces, and by looseness or distortion of the ladder. If bolt washers move, then there is no tension in the bolt to clamp the fastened members together.

f. Inspect welds for signs of corrosion, cracking, or breakage. If the ladder has been deformed from an impact, then adjacent welds on rungs and mounting brackets may have been cracked.

g. Inspect the ladder safety device to ensure the safety rail is properly mounted on the tower. The rail sections should be installed right-side up (notches are at the bottom of the tapered cuts vice the top). Look for worn, broken, or defective notches.

h. Check the ladder safety device to ensure the sliders ride freely on the rail.

i. Inspect the clamps, studs, bolts, and nuts which secure the safety rail to the ladder for corrosion, looseness, and breakage.

j. Ensure that the top of the safety rail is capped with a through bolt or other device that prevents the removal of a slider from the top of the rail.

k. Ensure that the safety rails are not painted, as this will cause problems with the passage of sliders. Rails may be wire brushed and spray galvanized if necessary.

SECTION 7 - OTHER COMPONENTS

General

Additional checklists are provided below for structure components not covered in the other sections of this Appendix. Components not listed here, but found on specific structures, shall be inspected to ensure that they are capable of continuing to perform their intended function safely.

Platform

a. Inspect the platform decking or grating for structural integrity and soundness.

b. Check the railings for deterioration and parts that are broken, severely bent, or otherwise considered unsafe.

Tower

a. Visually inspect all structural members (i.e., diagonal, vertical, and horizontal steel members) and connections of the towers for evidence of corrosion, deformation, signs of fatigue, and differential movement.

b. Look for excess corrosion at the bolts and joints that are bolted together, and for missing, loose, or damaged bolts.

c. Check the plumb (straightness) of the tower. All towers must be plumb (straight up and down). A simple gross inspection is sufficient. If the tower looks crooked, use a straight edge as a sight and be sure it is not an optical illusion. You may even find towers that zig zag. Improper construction or damage at specific section connections can cause one section of the tower to be out of plumb with the rest of the structure. Question any unexplained distortion. If the tower is leaning, something is wrong. Find out why it is leaning.

d. On structural pipe tower members, rust damage on the interior surfaces might not be obvious. Each member of such a tower should have drain holes at the bottom to prevent water from collecting and causing damage. Check these drain holes to make sure they are not obstructed and are doing their job. Visible rust flakes or rust staining may be an indication of interior rust damage.

Concrete Foundations

a. Inspect the concrete foundation above grade for signs of cracking or spalling. If conditions of the above grade concrete are poor, an area adjacent to the foundation should be excavated to check the condition of the concrete below grade.

b. Inspect the soil surrounding the tower foundation for evidence of settlement or upheaval.

c. Inspect the anchor bolts connecting the concrete foundation to the steel tower for deformation, loose nuts, corrosion, or defects.

Guy Anchors and Hardware

a. Inspect guy anchors, turnbuckles, thimbles, shackles, preformed dead end guy grips, shear pins, and cotter pins for signs of corrosion, deformation, and fatigue.

b. Preformed guy grips should be checked to ensure there is no change in surface appearance of the guy strand immediately next to these grips. A change in surface appearance may indicate slippage.

c. Ensure turnbuckles are properly moused with safety wire to prevent inadvertent turning of the turnbuckles. Also, turnbuckle threads should be coated with a light coat of petroleum based grease to prevent corrosion and binding.

d. Inspect structural guys for signs of bird caging, corrosion, fatigue, deformation, and broken strands. In weather conditions where there is no wind, a slack guy wire can be an indication that something is wrong.

e. Verify that safety tie wires are installed on all turnbuckles, shackles, and pins. Inspect steel anchor hardware for corrosion, including steel surfaces in contact with the ground.

Signal and Power Equipment

Items such as dayboards, battery boxes, wiring, solar panels, lighting equipment, sound equipment, and radar reflectors shall be inspected in accordance with the Aids to Navigation Manual - Technical, COMDTINST M16500.3 (series); the Alternating Current Aids to Navigation Servicing Guide, COMDTINST M16500.17 (series); and/or the Short Range Aids to Navigation Servicing Guide COMDTINST M16500.19 (series), as applicable.

U.S DEPARTMENT OF HOMELAND SECURITY U.S. COAST GUARD CG-6042 (Rev. 06-04)	**ATON STRUCTURE INSPECTION FORM**

Date of Inspection	**Aid Name/Aid Number**
Inspector (name, rank, unit)	**Description of Structure** (type, height, location)

Overall Assessment (select one): ☐ Good ☐ Satisfactory ☐ Fair ☐ Poor ☐ Critical

(For a definition of these terms, see COMDTINST M16500.25, Appendix A, page A-2)

Overall Comments

SSMR Submitted? ☐ **Y** ☐ **N**

Structure Components

Timber Piles **Condition Rating** (select one): ☐ **NI** ☐ **1** ☐ **2** ☐ **3** ☐ **4** ☐ **5**
(See COMDTINST M16500.25, Appendix A, page A-10)

Comments

Steel Piles **Condition Rating** (select one): ☐ **NI** ☐ **1** ☐ **2** ☐ **3** ☐ **4** ☐ **5**
(See COMDTINST M16500.25, Appendix A, page A-17)

Comments

Concrete Piles **Condition Rating** (select one): ☐ **NI** ☐ **1** ☐ **2** ☐ **3** ☐ **4** ☐ **5**
(See COMDTINST M16500.25, Appendix A, page A-25)

Comments

Reset

Other Construction Materials
Comments

Ladder
Comments

Platform
Comments

Tower
Comments

Concrete Foundation
Comments

Guy Anchors and Hardware
Comments

Other Components Not Listed Above
Comments

Reset

INSPECTION CHECKSHEET

Use this check sheet to generate comments for the Inspection Form

TIMBER PILES

- Check the tops of piles for physical damage, dry rot, and termite or pest infestation. Determine the depth of deterioration.
- Check for cracked, rotted, loose, or worn piles or connecting braces.
- Check pile and mast alignment. If the aid is a multi-pile structure, are the piles angled toward each other evenly? Is the mast out of plumb?
- Visually examine piling in the tidal zone for marine borer damage.
- Sound the piles with a hammer and carefully probe with a thin-pointed tool such as an ice pick to look for internal decay and soft timber.
- Check for member damage due to overload or impact.
- Clear a section of the structure of all marine growth and visually inspect for surface deterioration.
- Check for corrosion of steel fasteners, including bolts, drift pins, and wire rope.

STEEL PILES

- Check for corrosion evidence: rust, scale, and holes, especially in the splash zone and at extreme low water level.
- Check the extent of steel member corrosion in the splash zone. Hammer the surface corrosion (use safety glasses) to remove corrosion byproducts and expose the steel below.
- Check for deformation, distortion, or deflection.
- Check for abrasion of steel structures as indicated by a worn, smooth, or polished appearance.
- Inspect welds for signs of corrosion, cracking, or breakage.
- Inspect coating for any peeling, blistering, etc.
- Check for loss of foundation material and/or scour.

CONCRETE PILES

- Inspect for cracks, spalling, corrosion of reinforcing steel, and visual signs of rust staining.
- Check for evidence of chemical deterioration, abrasion wear, and overload damage.
- Sound the piling with a hammer to detect any loose layers of concrete or delaminations.

OTHER CONSTRUCTION MATERIALS

Masonry:
- Check for missing or displaced blocks.
- Check for wall movement.

Aluminum:
- Check for corrosion.
- Check for abrasion and wear.
- Check for cracked welds.

Fiberglass:
- Check for broken members.
- Check for loose connections.
- Check for damage to the surface finish.

Plastics:
- Check for broken or damaged members.
- Check for cracking.
- Check for loose bolted connections.

Rubber:
- Check for rubber deterioration--hardening, cracking, swelling, softening.

(continued on next page)

INSPECTION CHECKSHEET

(continued from previous page)

LADDER

- Check horizontal and vertical alignment. Is the ladder misaligned?
- Does the ladder vibrate or move from the current or waves, or when the boat berths against it?
- Are there signs of damage caused by vessel impact, ice, logs, or other debris?
- Check ladders for corroded, broken, bent, or missing rungs.
- Check for corroded, loose, or failed connections.
- Inspect welds for signs of corrosion, cracking, or breakage.
- Inspect the ladder safety device to ensure the safety rail is properly mounted on the tower. The rail sections should be installed right-side up (notches are at the bottom of the tapered cuts vice the top). Look for worn, broken, or defective notches.
- Check the ladder safety device to ensure the sliders ride freely on the rail.
- Inspect the clamps, studs, bolts, and nuts, which secure the safety device to the ladder for corrosion, looseness, and breakage.
- Ensure the top of the safety rail is capped with a through bolt or other device to prevent the removal of the slider from the top of the rail.
- Ensure the safety rails are not painted, as this will cause problems with the passage of sliders.

PLATFORM

- Inspect the platform decking or grating for structural integrity and soundness.
- Check the railings for deterioration and parts that are broken, severely bent, or otherwise considered unsafe.

TOWER

- Inspect structural members and connections for corrosion, deformation, fatigue, and differential movement.
- Look for corrosion at the bolts and joints that are bolted together, and for missing, loose, or damaged bolts.
- Check the plumb (straightness) of the tower.
- Check drain holes on hollow rod towers to make sure they are not obstructed. The amount of rust leaking out can be an indication of the extent of the rust damage inside the hollow member.

CONCRETE FOUNDATION

- Inspect the concrete foundation above grade for signs of cracking or spalling. If conditions of the above grade concrete are poor, an area adjacent to the foundation should be excavated to check the condition of the concrete below grade.
- Inspect the soil surrounding the tower foundation for evidence of settlement or upheaval.
- Inspect the anchor bolts connecting the concrete foundation to the steel tower for deformation, loose nuts, corrosion, or defects.

GUY ANCHORS AND HARDWARE

- Inspect guy anchors, turnbuckles, thimbles, shackles, preformed dead end guy grips, shear pins, and cotter pins for signs of corrosion, deformation, and fatigue.
- Check preformed guy grips to ensure there is no change in surface appearance of the guy strand immediately next to these grips.
- Ensure turnbuckles are properly moused with safety wire to prevent loosening of the turnbuckles. Also, turnbuckle threads should be coated with a light coat of petroleum based grease to prevent their binding.
- Inspect structural guys for signs of bird caging, corrosion, fatigue, deformation, and broken strands. In weather conditions where there is no wind, a slack guy wire can be an indication that something is wrong.
- Make sure that all safeties are installed and check the anchor where it enters the ground for corrosion.

U.S. Department of
Homeland Security

United States
Coast Guard

AIDS TO NAVIGATION MANUAL - STRUCTURES

APPENDIX B

DATA SHEETS

COMDTINST M16500.25A
NOVEMBER 2005

TABLE OF CONTENTS

Data Sheet	Page
1. Single Pile Wood	B-1
2. Single Pile Steel	B-3
3. Single Pile Concrete	B-5
4. Post	B-7
5. Spindle	B-9
6. Battered Pile Dolphin	B-11
7. Cluster Pile Dolphin	B-13
8. Multiple Pile Platform	B-15
9. Free Standing Skeleton Tower	B-18
10. Guyed Skeleton Tower	B-20
11. D9 Cylinder Tower	B-22
12. James River Ice Resistant Structure	B-24
13. Caisson Foundation	B-26
14. Mud Sill Foundation	B-27
15. Concrete Foundation	B-28
16. Riprap Foundation	B-29
17. Steel Stakes Foundation	B-30
18. Battery Box	B-31
19. Structure Radar Reflector	B-33
20. Fixed Aid Lantern Stand Assembly	B-34
21. Tethering of ATON Structures	B-35

DATA SHEET 1 - SINGLE PILE WOOD

Description. A single pile wood structure is commonly used for lighted and unlighted aids in marine locations where exposure and bottom conditions permit. Typical use would be in protected and semi-exposed environments. Advantages include low cost, ready availability, and ease of construction. Disadvantages include susceptibility to marine borers, rotting, ice damage, beetle attack, and brooming of the tip during driving. When subject to a moderate collision, a wood pile will snap upon failure.

Physical Characteristics.

- Wood: Douglas Fir or Southern Pine, conforming to ASTM Standard D25.
- Preservative Treatment: Chromated Copper Arsenate (CCA) or Acid Copper Chromate (ACC), conforming to AWPA Standard P-5 and C-3. No preservative treatment is required if knockdown is expected within 12 months or less.
- Common pile lengths: 45' to 60'.

Structural Requirements. Two requirements must be met to achieve the full structural capability of a single pile wood structure:

- The pile must achieve fixity.
- The physical integrity of the pile must be maintained (i.e., it must be free from brooming, splitting, etc.).

Related Equipment. For lighted aids, a prefabricated platform is required to support dayboards, power systems, light signals, and servicing personnel. For unlighted aids, dayboards can be affixed directly to the pile without the use of a platform.

Recommended Fall Protection. Climbing and performing minor work on most SPW structures will not require fall protection, as the work area is located at relatively low height above the water surface and using fall protection may adversely impact climber safety and ability to accomplish work. However, when structures satisfy the conditions for guardrails listed in paragraph 2.E.5.b, guardrails are the recommended fall protection system on the structure platforms.

ATONIS Abbreviation. SPW (Single Pile Wood)

DATA SHEET 1 - SINGLE PILE WOOD (continued)

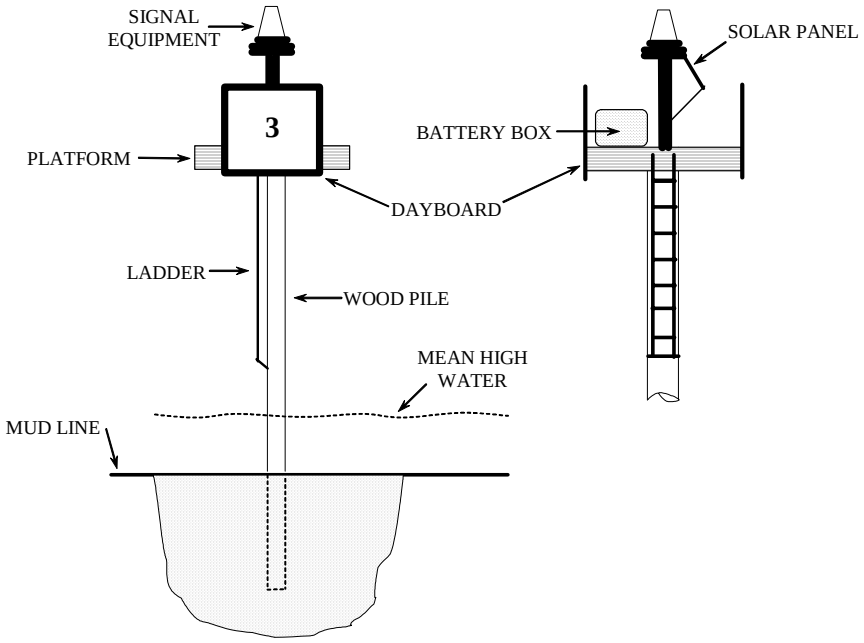

Figure 1-1 - Single Pile Wood Structure (Lighted)

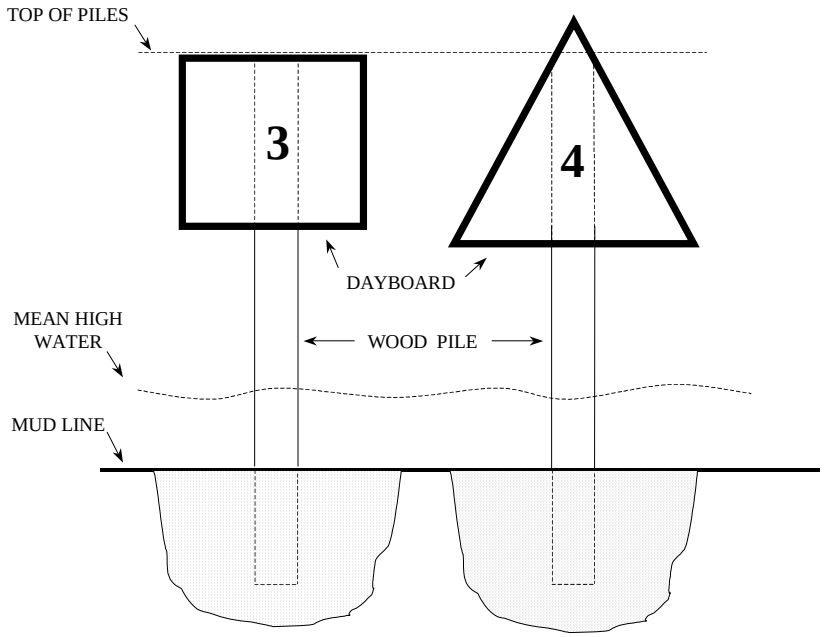

Figure 1-2 - Single Pile Wood Structure (Unlighted)

DATA SHEET 2 - SINGLE PILE STEEL

Description. A single pile steel structure is commonly used for lighted and unlighted aids in marine locations where exposure and bottom conditions permit. This is generally the most effective type of pile for moderate ice conditions or hard bottom areas. Advantages include the relative permanence of the aid, the ability to withstand hard driving and moderate collisions, and the ability to achieve long lengths by welding sections together. Disadvantages include higher cost and limited availability as compared with wood. When subject to moderate collisions, a steel pile will yield and can be straightened to its original position.

Physical Characteristics.

- Steel: 12" or 18" diameter steel pipe, or 12H53 "H" piling.
- Common lengths: 30', 40', 50' and 60'.

(Note: These characteristics apply to piles driven by WLICs. Commercial pile driving can be performed in deeper water with larger piles.)

Related Equipment. For lighted aids, a prefabricated metal platform is required to support dayboards, power systems, light signals, and servicing personnel. For unlighted aids, dayboards can be affixed directly to the pile without the use of a platform.

Recommended Fall Protection. Performing minor work on most unlighted SPS structures will not require fall protection, as work on these structures is typically limited to work accomplished from the work boat. However, if work is being performed from a fixed ladder on a SPS structure, it is recommended that work positioning be used to secure the climber to the structure, so that both of the climber's hands are free to conduct work on the structure. In this case, the climber could attach one end of a work positioning lanyard to the full body harness hip D-ring, then wrap the lanyard around the vertical rail(s) and a horizontal rung of the ladder, and finally clip the other end lanyard into the opposite hip D-ring on the full body harness, ensuring that the slack in the lanyard allows enough room to work, but does not allow a fall of more than two feet. For lighted SPS structures, guardrails are the recommended fall protection system on the structure platforms.

ATONIS Abbreviation. SPS (Single Pile Steel)

DATA SHEET 2 - SINGLE PILE STEEL (continued)

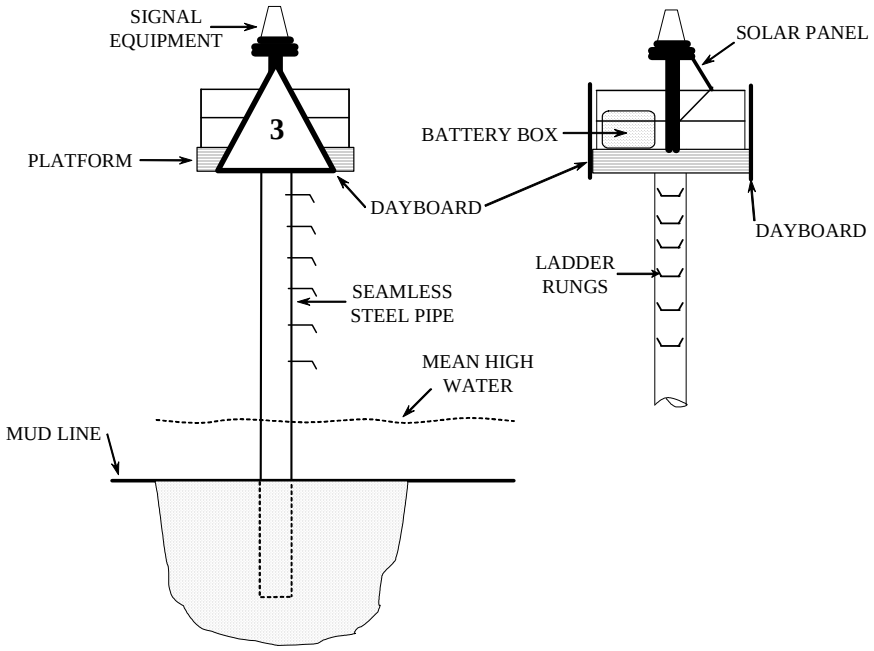

Figure 2-1 - Single Pile Steel Structure (Lighted)

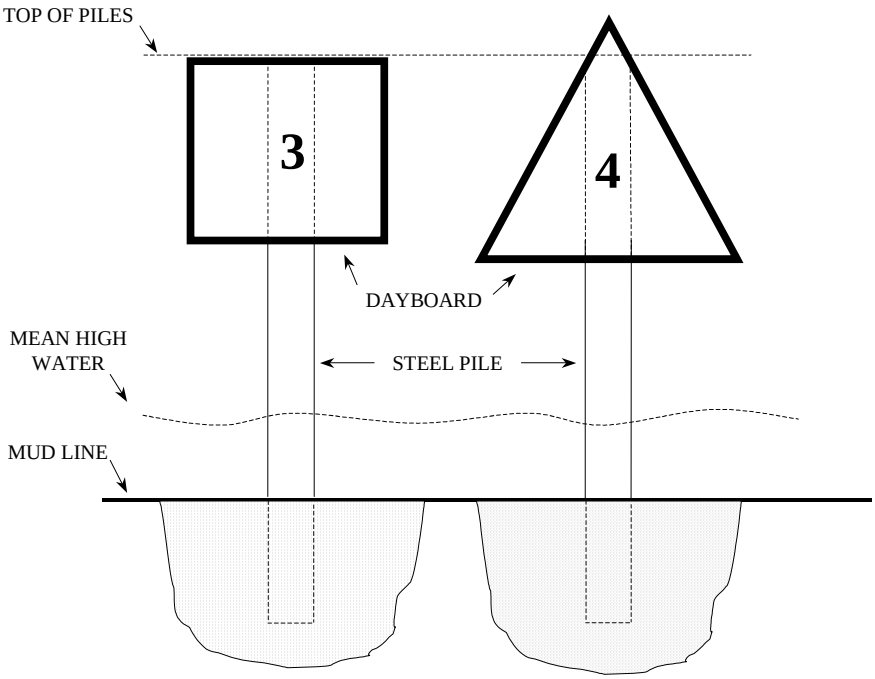

Figure 2-2 - Single Pile Steel Structure (Unlighted)

DATA SHEET 3 - SINGLE PILE CONCRETE

Description. A single pile concrete structure is used for lighted and unlighted aids in marine locations where exposure and bottom conditions permit. Typically, these are used as a last resort when wood or steel piles are not readily available. Advantages include resistance to decay and ease of manufacture. Disadvantages include cost, weight, difficult to handle, prone to corrosion of internal steel members, possibility of cracking during pile driving. When subject to a moderate collision, a concrete pile will snap upon failure.

Physical Characteristics.

- Concrete: 10", 12", or 14" square or octagonal shapes.
- Common pile lengths: 40', 50', and 60'.

Structural Requirements. Two requirements must be met to achieve the full structural capability of a single pile concrete structure:

- The pile must achieve fixity.
- The physical integrity of the pile must be maintained (i.e., it must be free from cracking, spalling, etc.).

Related Equipment. For lighted aids, a prefabricated metal or concrete slab platform is required to support dayboards, power systems, light signals, and servicing personnel. For unlighted aids, dayboards can be affixed directly to the pile without the use of a platform.

Recommended Fall Protection. Performing minor work on most unlighted SPC structures will not require fall protection, as work on these structures is typically limited to work accomplished from the deck of a boat. However, if work is being performed from a fixed ladder on a SPC structure, it is recommended that work positioning be used to secure the climber to the structure, so that both of the climber's hands are free to conduct work on the structure. In this case, the climber could attach one end of a work positioning lanyard to the full body harness hip D-ring, then wrap the lanyard around the vertical rail(s) and a horizontal rung of the ladder, and finally clip the other end lanyard into the opposite hip D-ring on the full body harness, ensuring that the slack in the lanyard allows enough room to work, but does not allow a fall of more than two feet. For lighted SPC structures, guardrails are the recommended fall protection system on the structure platforms.

ATONIS Abbreviation. SPC (Single Pile Concrete)

DATA SHEET 3 - SINGLE PILE CONCRETE (continued)

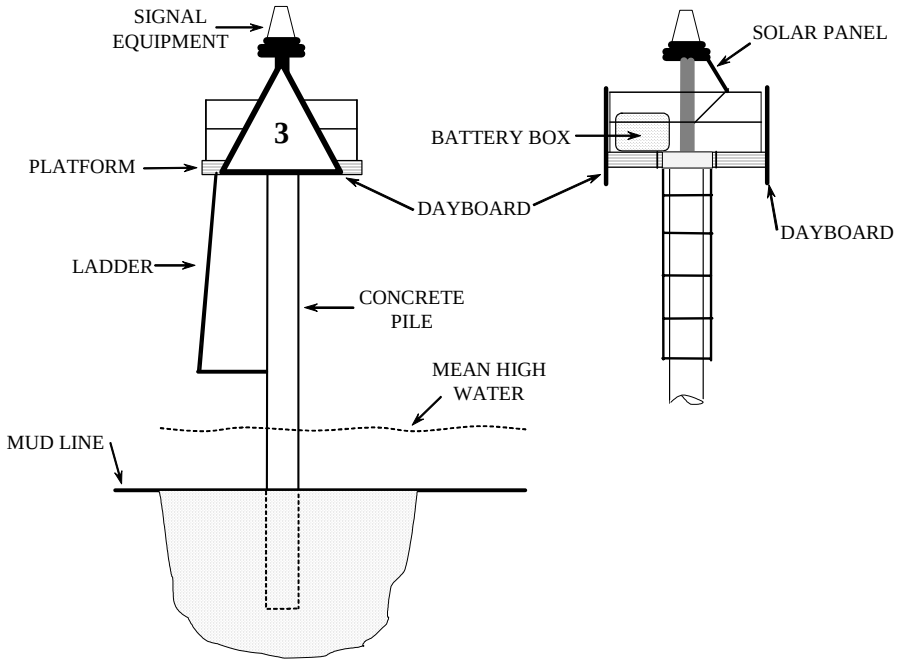

Figure 3-1 - Single Pile Concrete Structure (Lighted)

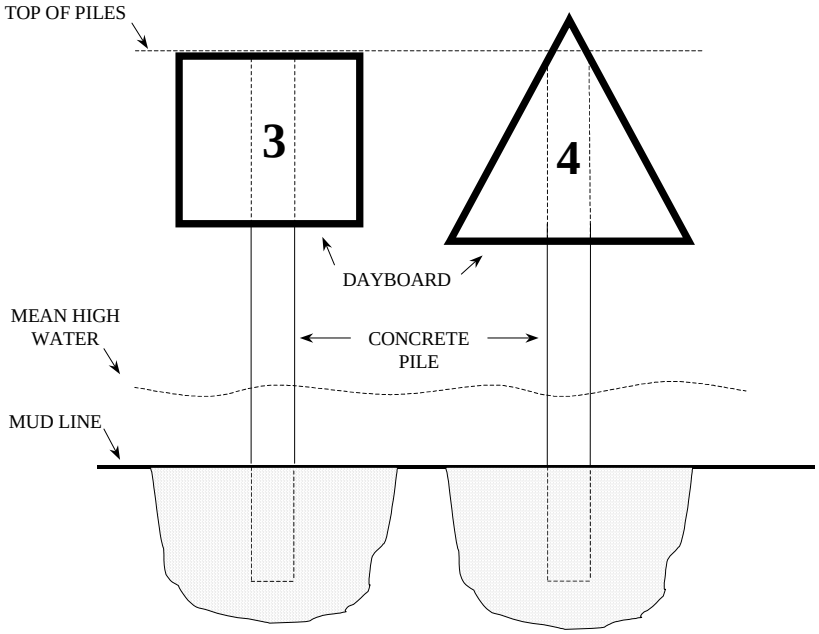

Figure 3-2 - Single Pile Concrete Structure (Unlighted)

DATA SHEET 4 - POST

Description. A post (steel, aluminum, or concrete) is used for lighted and unlighted aids on land sites. It is usually secured to a concrete foundation.

Structural Requirements. The critical element of a post structure is generally the overturning moment developed at the connection between the foundation and the post. The structure must be designed to resist this overturning moment caused by environmental forces.

Related Equipment. For lighted aids, a prefabricated platform can be used to support dayboards, power systems, light signals, and servicing personnel. Since the structure is land based, commercial power can also be supplied with wiring run through an opening at the base of the post, up to the light signal. For unlighted aids, dayboards can be affixed directly to the structure without the use of a platform.

Recommended Fall Protection. Performing minor work on some post structures will not require climbing fall protection, particularly if the work is accomplished from the basket of a man lift. However, when work is being performed from pegs on a post structure, it is recommended that work positioning be used to secure the climber to the structure, so that both of the climber's hands are free to conduct work on the structure. In this case, the climber could attach one end of a work positioning lanyard to the full body harness hip D-ring, then wrap the lanyard around the post at least two times directly above a peg so the lanyard will not slide down the post, and finally clip the other end lanyard into the opposite hip D-ring on the full body harness, ensuring that the slack in the lanyard allows enough room to work, but does not allow a fall of more than two feet. For lighted post structures with platforms, guardrails are the recommended fall protection system on the structure platforms.

ATONIS Abbreviation. POST (not currently used in ATONIS)

DATA SHEET 4 - POST (continued)

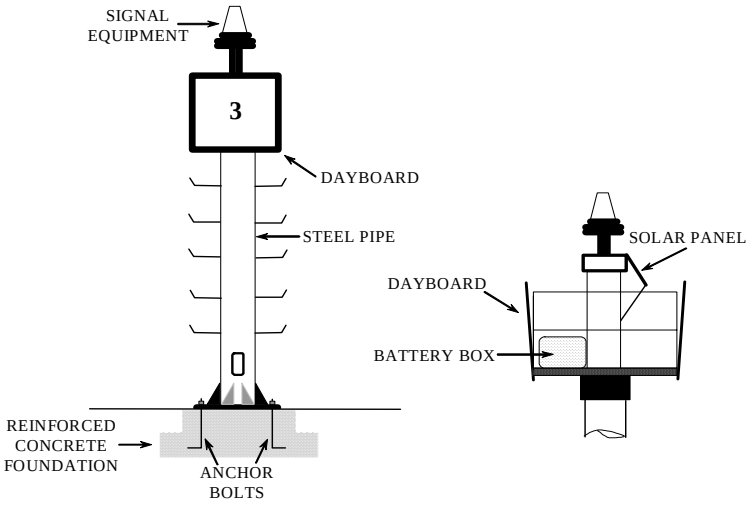

Figure 4-1 - Post Structure

DATA SHEET 5 - SPINDLE

Description. A spindle is a specialized structure used for lighted and unlighted aids in tidal areas and on land sites. It consists of single pole made of various lengths of pipe connected end-to-end, and is usually secured to a concrete foundation or to steel stakes embedded into rock with grout.

Structural Requirements. The critical elements of a spindle are the flanges connecting the various sections and the connection between the pipe and the foundation. The structure must be designed to resist overturning moments caused by environmental forces.

Related Equipment. For lighted aids, a prefabricated platform can be used to support dayboards, power systems, light signals, and servicing personnel. For unlighted aids, dayboards can be affixed directly to the structure without the use of a platform.

Recommended Fall Protection. Performing minor work on some spindle structures may not require climbing fall protection, depending partly on the work area height above the structure foundation. However, when work is being performed from a ladder, or pegs, on a spindle structure, it is recommended that work positioning be used to secure the climber to the structure, so that both of the climber's hands are free to conduct work on the structure. In the case of working from a ladder, the climber could attach one end of a work positioning lanyard to the full body harness hip D-ring, then wrap the lanyard around the vertical rail(s) and a horizontal rung of the ladder, and finally clip the other end lanyard into the opposite hip D-ring on the full body harness, ensuring that the slack in the lanyard allows enough room to work, but does not allow a fall of more than two feet. For lighted spindle structures with platforms, guardrails are the recommended fall protection system on the structure platforms.

ATONIS Abbreviation. SPINDLE

DATA SHEET 5 - SPINDLE (continued)

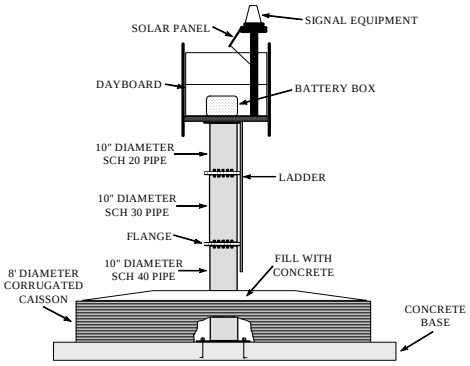

Figure 5-1 - Spindle Structure with Flange Connections

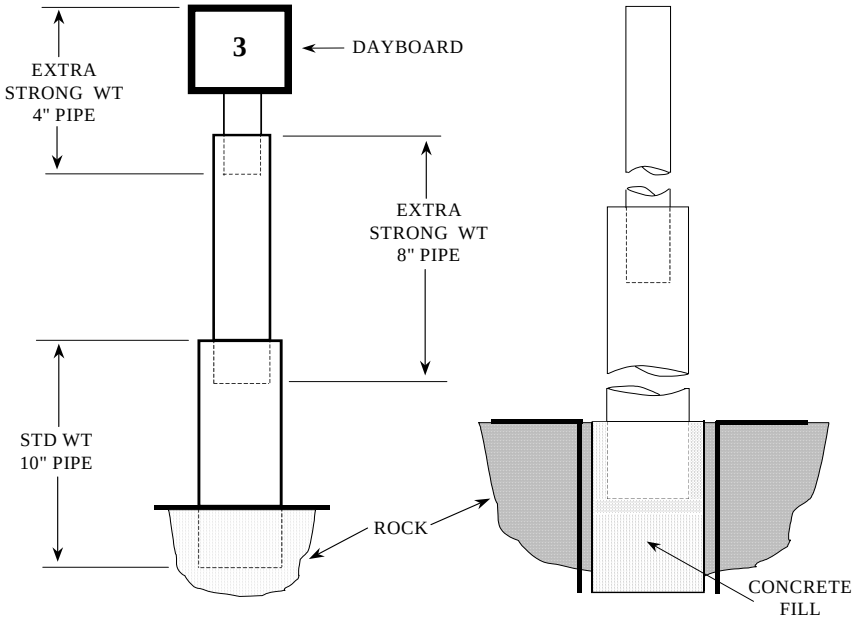

Figure 5-2 - Spindle Structure with Gravity Connections

DATA SHEET 6 - BATTERED PILE DOLPHIN

Description. A battered pile dolphin structure is used on marine sites for lighted or unlighted aids when a single pile structure is not effective because of soft bottom or exposure conditions such as severe wind or wave action. The basic configuration involves three or more piles (wood, steel, or concrete) driven on an angle to the vertical with the tops connected by "thru bolts" or wrapped with cable.

Related Equipment. For lighted aids, a prefabricated platform can be used to support dayboards, power systems, light signals, and servicing personnel. For unlighted aids, dayboards can be affixed directly to the structure without the use of a platform.

Recommended Fall Protection. Performing minor work on most unlighted battered pile dolphin structures will not require fall protection, as work on these structures is typically limited to work accomplished from the deck of a boat. However, if work is being performed from a fixed ladder on a battered pile dolphin structure, it is recommended that work positioning be used to secure the climber to the structure, so that both of the climber's hands are free to conduct work on the structure. In this case, the climber could attach one end of a work positioning lanyard to the full body harness hip D-ring, then wrap the lanyard around the vertical rail(s) and a horizontal rung of the ladder, and finally clip the other end lanyard into the opposite hip D-ring on the full body harness, ensuring that the slack in the lanyard allows enough room to work, but does not allow a fall of more than two feet. For lighted battered pile dolphin structures, guardrails are the recommended fall protection system on the structure platforms.

ATONIS Abbreviation. MPW# (Multiple Pile Wood), MPS# (Multiple Pile Steel), MPC# (Multiple Pile Concrete), where "#" indicates the number of piles used in construction.

DATA SHEET 6 - BATTERED PILE DOLPHIN (continued)

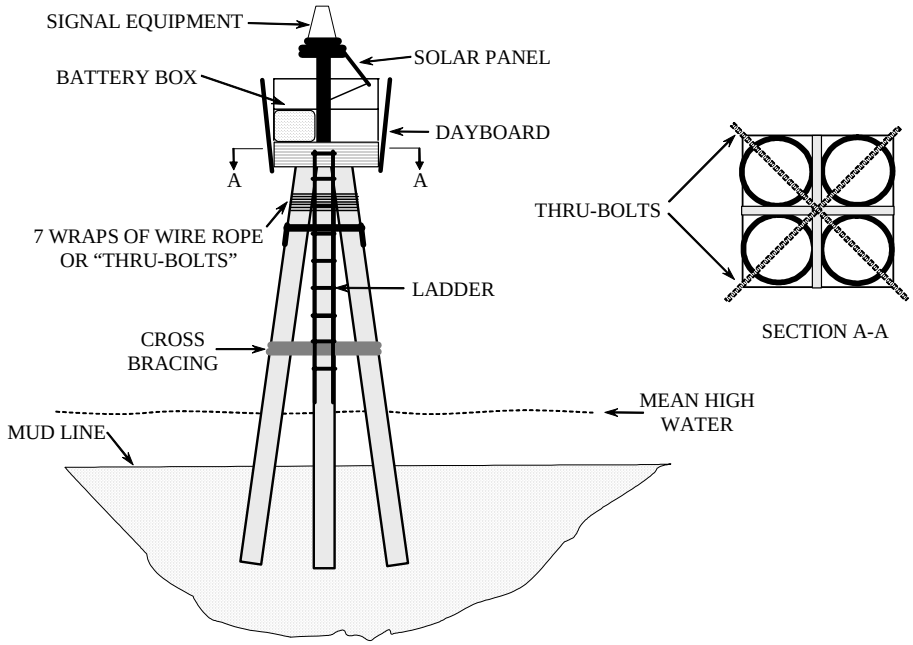

Figure 6-1 - Battered Pile Wood Structure

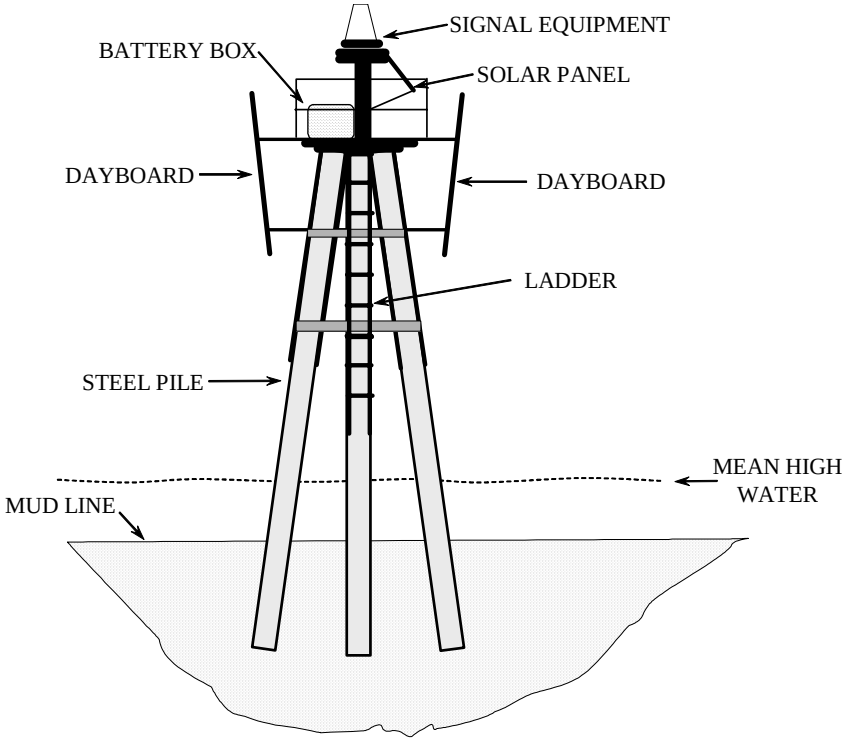

Figure 6-2 - Battered Pile Steel Structure

DATA SHEET 7 - CLUSTER PILE DOLPHIN

Description. A cluster pile dolphin structure is used on marine sites for lighted or unlighted aids when a single pile structure is not effective because of exposure conditions such as severe wind or wave action. The basic configuration involves three or more piles (usually wood) driven vertically, skin-to-skin, and wrapped tightly together at various heights.

Related Equipment. For lighted aids, a prefabricated platform can be used to support dayboards, power systems, light signals, and servicing personnel. For unlighted aids, dayboards can be affixed directly to the structure without the use of a platform.

Recommended Fall Protection. Climbing and performing minor work on most cluster pile dolphin structures will not require fall protection, as the work area is located at relatively low height above the water surface and using fall protection may adversely impact climber safety and ability to accomplish work. However, when structures satisfy the conditions for guardrails listed in paragraph 2.E.5.b, guardrails are the recommended fall protection system on the structure platforms.

ATONIS Abbreviation. SISTERPILE

DATA SHEET 7 - CLUSTER PILE DOLPHIN (continued)

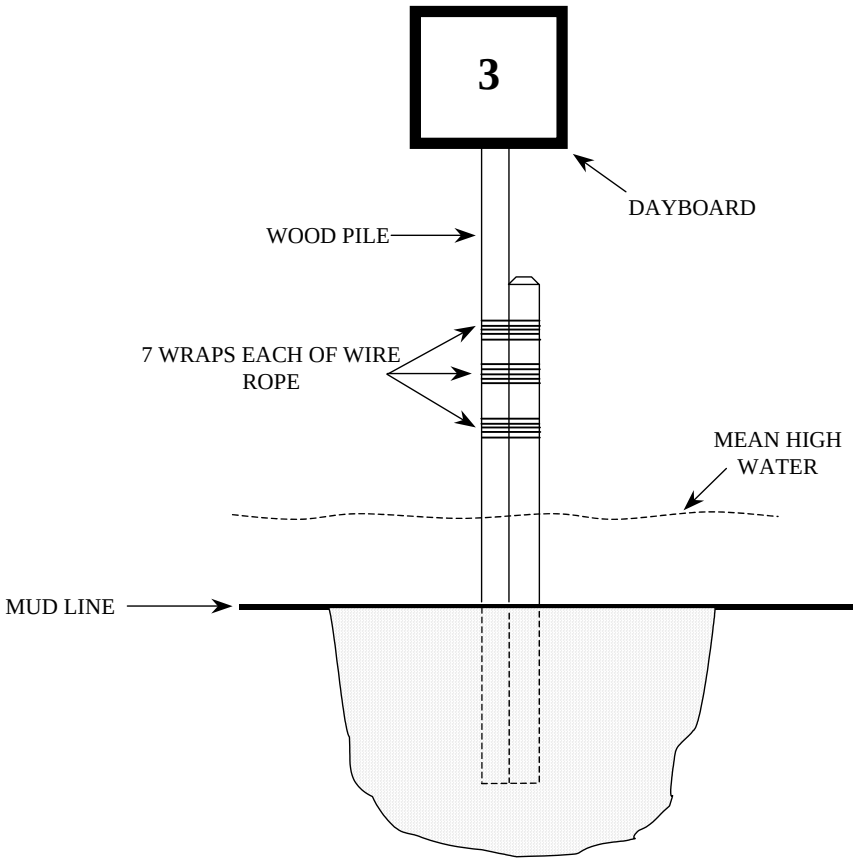

Figure 7-1 - Cluster Pile Dolphin Structure

DATA SHEET 8 - MULTIPLE PILE PLATFORM

Description. A multiple pile platform structure is used on marine sites normally as a foundation for a skeleton tower when the focal height of the aid is over 30 ft, as with a range structure. However, this design is also applicable for shorter structures that require the platform space to accommodate equipment such as large solar arrays.

Related Equipment. A prefabricated metal or wood platform is required to support up to a 50-ft skeleton tower with dayboards, power systems, light signals, and servicing personnel as necessary.

Recommended Fall Protection. Performing work on multiple pile platform structures will typically require fall protection on the structure platform and while climbing and working on the skeleton tower. For multiple pile platform structures, guardrails are the recommended fall protection system on the structure platforms. In addition, a ladder safety device on a fixed ladder and guardrails on the top platform are the recommended fall protection systems on skeleton towers with a multiple platform structure foundation.

ATONIS Abbreviation. Because this aid often combines a multiple pile platform with a skeleton tower, there is currently no single ATONIS abbreviation that is used consistently for this structure type.

DATA SHEET 8 - MULTIPLE PILE PLATFORM (continued)

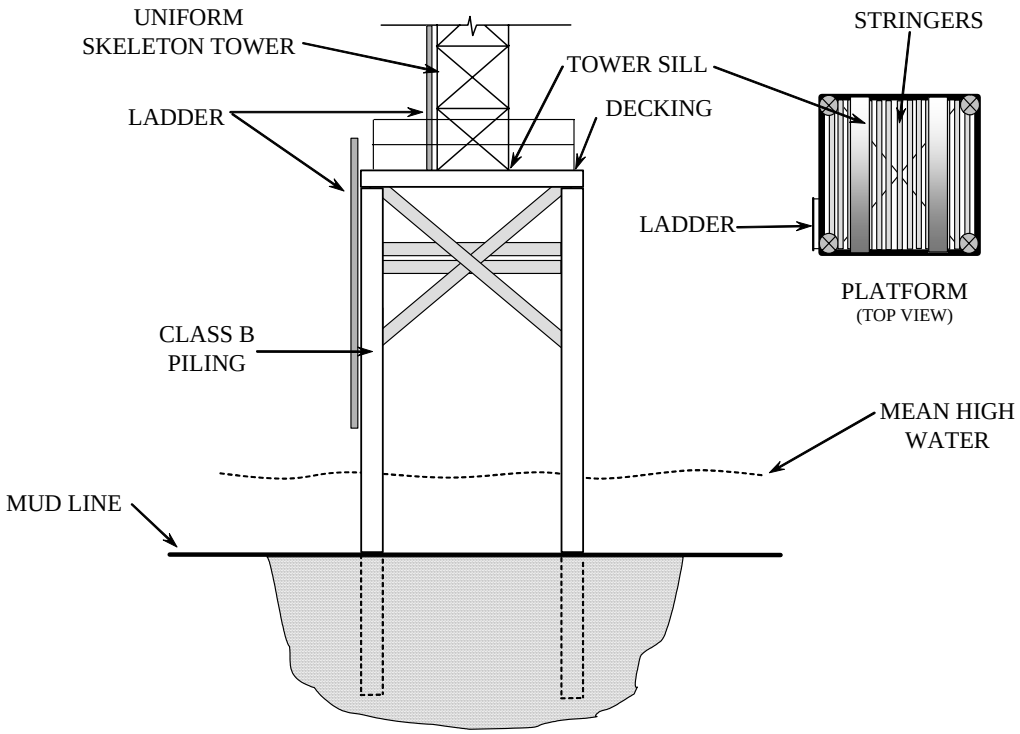

Figure 8-1 - Multiple Pile Platform Structure (Wood)

DATA SHEET 8 - MULTIPLE PILE PLATFORM (continued)

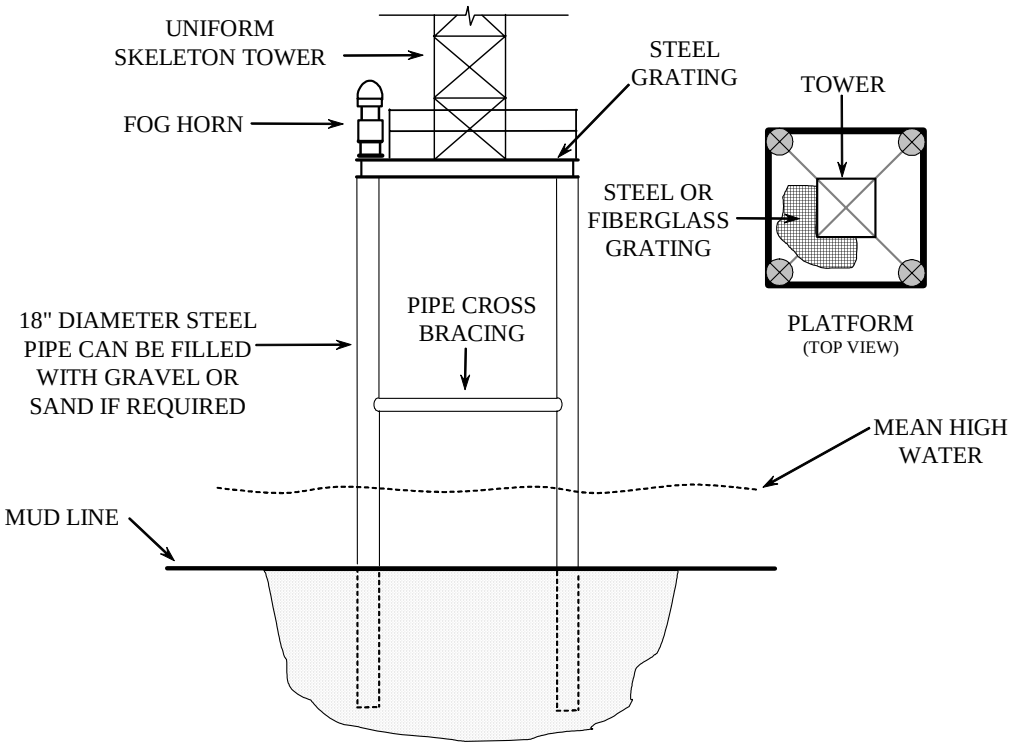

Figure 8-2 - Multiple Pile Platform Structure (Steel)

DATA SHEET 9 - FREE-STANDING SKELETON TOWER

Description. A free-standing skeleton tower is an efficient and economical means of supporting signal equipment on land or marine sites where it is not feasible to guy the structure. This type of tower is especially effective when the focal height needed for the operational requirements of the beacon is over 30 ft, as with range structures.

Related Equipment. A prefabricated platform can be used to support dayboards, power systems, light signals, and servicing personnel as necessary.

Recommended Fall Protection. Performing work on free-standing skeleton tower structures will typically require fall protection while climbing and working on the skeleton tower. A ladder safety device on a fixed ladder and guardrails on the top platform are the recommended fall protection systems on freestanding skeleton towers.

ATONIS Abbreviation. STL SKELTOW or WxD TOWER, where "w" is width and "d" is depth in feet.

DATA SHEET 9 - FREE-STANDING SKELETON TOWER (continued)

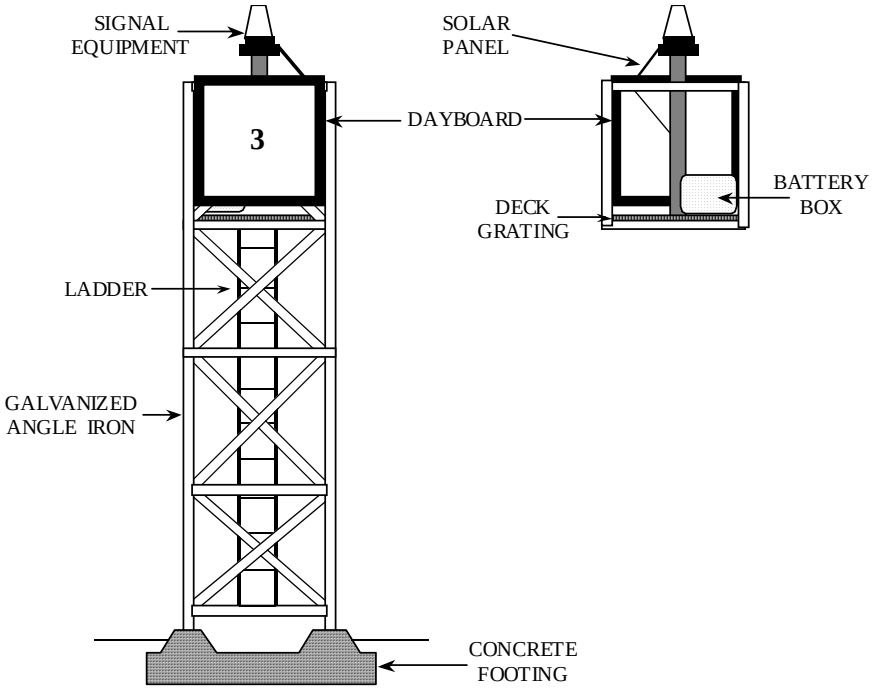

Figure 9-1 - Freestanding Angle Iron Skeleton with Concrete Footings on Land

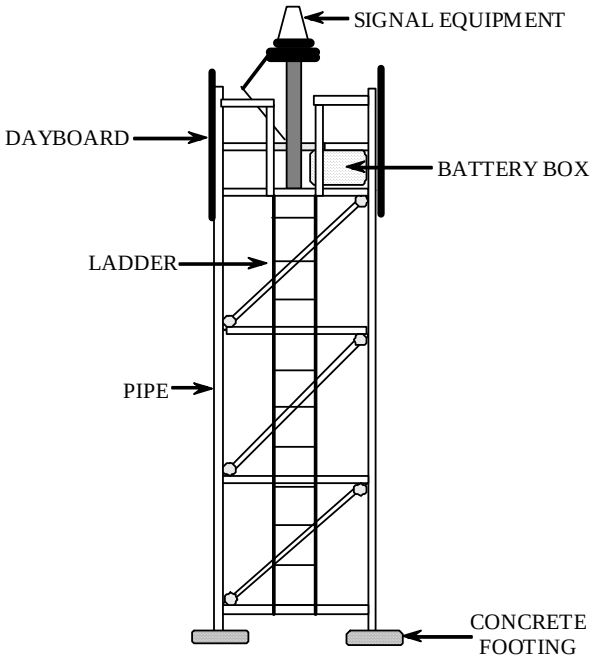

Figure 9-2 - Freestanding Pipe Skeleton with Concrete Footings on Land

DATA SHEET 10 - GUYED SKELETON TOWER

Description. Where feasible, a guyed skeleton tower is an efficient and economical means to support signal equipment on land.

Related Equipment. A prefabricated platform can be used to support dayboards, power systems, light signals, and servicing personnel as necessary. Since the structure is land based, power systems can be maintained at the base of the structure. Dayboards can be affixed directly to the structure without the use of a platform.

Recommended Fall Protection. Performing work on guyed skeleton tower structures will typically require fall protection while climbing and working on the skeleton tower. A ladder safety device is the recommended fall protection while climbing if the size of the tower does not limit installation of a rigid rail or cable safety system. If the guyed skeleton tower does not have a rigid rail or a cable safety system, it is recommended that a fall arrest system is used when climbing the structure. If the structure does not have a platform at the work area, when the climber stops climbing to perform work, it is recommended that work positioning be used to secure the climber to the structure, so that both of the climber's hands are free to conduct work on the structure. In this case, the climber could attach one end of a work positioning lanyard to the full body harness hip D-ring, then wrap the lanyard around the vertical rail(s) and a horizontal rung of the ladder or a tower structural member, and finally clip the other end lanyard into the opposite hip D-ring on the full body harness, ensuring that the slack in the lanyard allows enough room to work, but does not allow a fall of more than two feet. For guyed skeletal tower structures with platforms, guardrails are the recommended fall protection system on the structure platforms.

ATONIS Abbreviation. ## ROHNTWR, where '##' indicates the structure height in feet.

DATA SHEET 10 - GUYED SKELETON TOWER (continued)

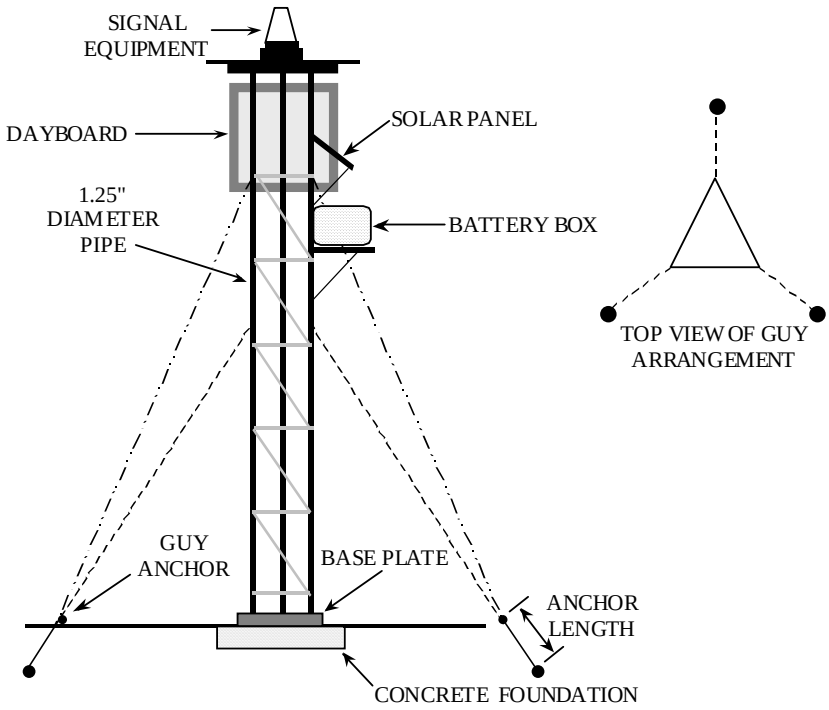

Figure 10-1 - Single Guyed Skeleton Tower

DATA SHEET 11 - D9 CYLINDER TOWER

Description. A cylinder structure typically consists of a 5' diameter by 20' tall steel cylinder on a concrete foundation. A variation of this structure is similar, but 9' diameter and 30' tall. The structure has a watertight door, interior ladder, storage shelves, and a skylight hatch on top for access to the signal equipment. Advantages of this structure include being an excellent daymark, vandal resistance, and providing weather protection to servicing personnel.

Physical Characteristics.

- Steel: 5' x 20' (or 9' x 30') cylindrical structure
- White epoxy paint system w/ colored band (if lateral significance is required)
- Concrete foundation

Related Equipment. Typically a lighted aid, requiring a power system and light signal.

Recommended Fall Protection. None recommended.

ATONIS Abbreviation. CYLINDRICAL

DATA SHEET 11 - D9 CYLINDER TOWER (continued)

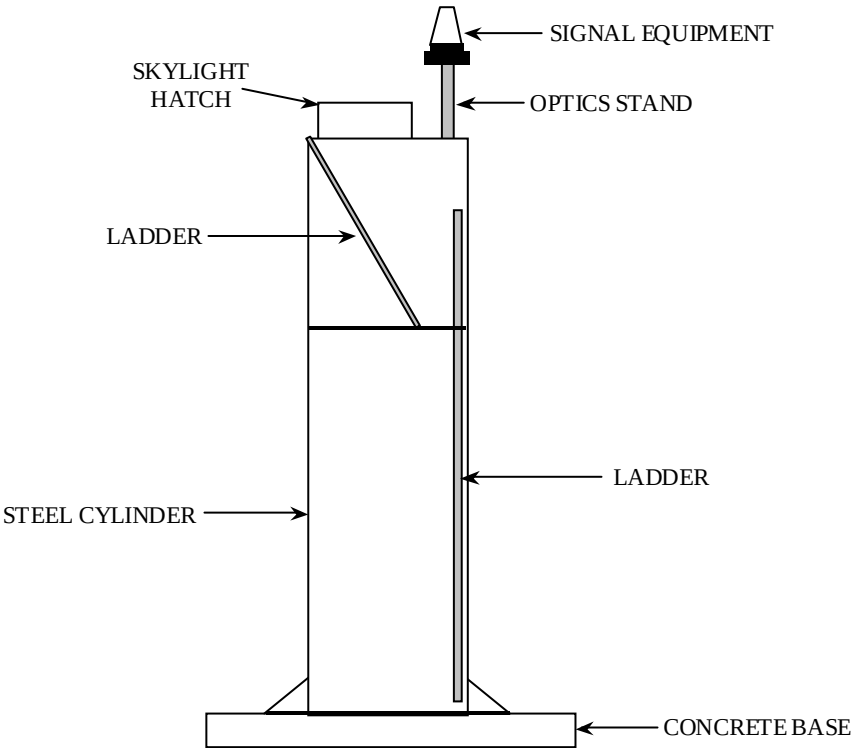

Figure 11-1 - D9 Cylinder Tower

DATA SHEET 12 - JAMES RIVER ICE RESISTANT STRUCTURE (JRIRS)

Description. A JRIRS consists of a four-pile steel dolphin and an 8' or 10' square platform. It typically serves as a foundation for a steel skeleton tower. They are often fabricated by Coast Guard industrial facilities and installed by construction tenders (WLICs). An 18" diameter "king pile" is driven on the surveyed position, a template is placed over this pile, and three 12" diameter batter piles are driven through the template. The platform is then mounted on the dolphin foundation. The design height for the platform is 11-15 feet above MHW. The JRIRS makes a good offshore, shallow-water structure capable of withstanding light to moderate icing conditions.

Related Equipment. The platform, mounted on the dolphin foundation, supports a tower of required height. The tower can be used to support dayboards, power systems, light signals, and servicing personnel as necessary.

Recommended Fall Protection. Performing work on JRIRSs will typically require fall protection on the structure platform and while climbing and working on the skeleton tower. For JRIRSs, guardrails are the recommended fall protection system on the structure platforms. In addition, a ladder safety device on the fixed ladder and guardrails on the top platform are the recommended fall protection systems on skeleton towers with a JRIRS foundation.

ATONIS Abbreviation. JRIRS

DATA SHEET 12 - JAMES RIVER ICE RESISTANT STRUCTURE (continued)

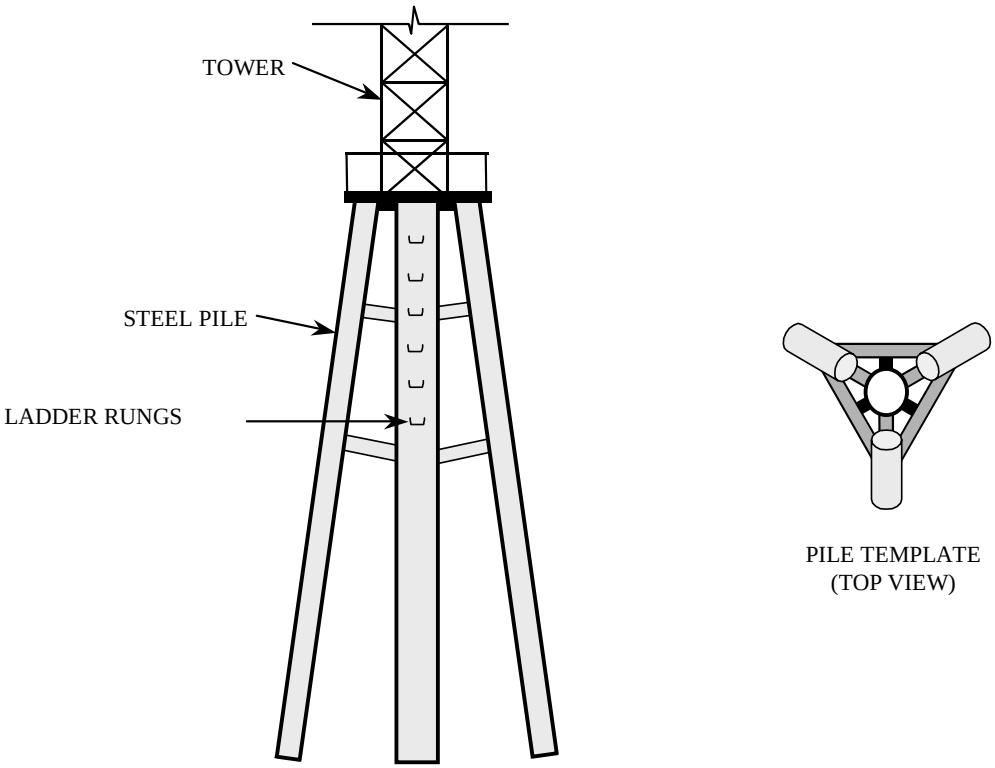

Figure 12-1 - James River Ice Resistant Structure

DATA SHEET 13 - CAISSON FOUNDATION

Function. A caisson is a steel or reinforced concrete cylinder normally used to support a skeleton tower. It is used when site conditions are severe, as with a heavy ice flow, or when the foundation is in an exposed area and a more permanent structure is needed. The cylinder serves as a form to hold rock, sand, or concrete.

Structural Requirements. A caisson foundation shall be designed to be compatible with the design loads of the superstructure and to withstand the environmental loading of semi exposed or exposed site locations.

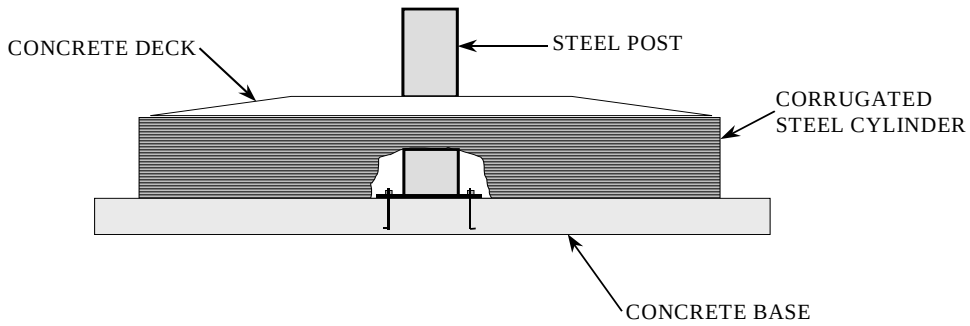

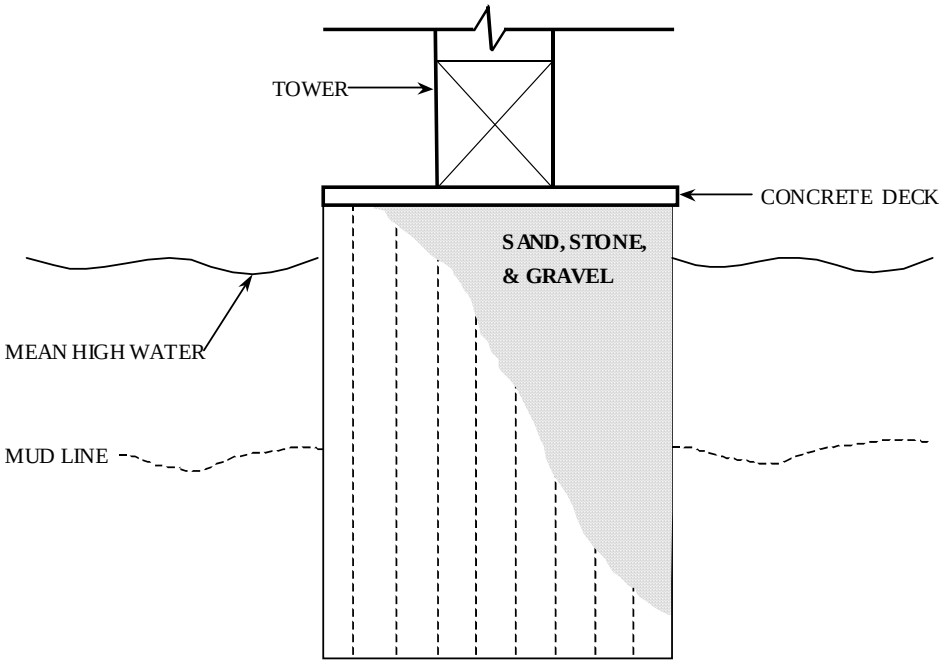

Figure 13-1 - Caisson Foundation

DATA SHEET 14 - MUD SILL FOUNDATION

Function. A mud sill foundation is used to support beacon structures in locations where the underlying stratum is unstable, such as in a swampy area. This foundation is basically a specialized platform structure.

Physical Characteristics.

- Primary structural components: 10" X 12" timbers.
- Preservative treatment: Chromated Copper Arsenate (CCA) or Acid Copper Chromate (ACC), conforming to AWPA Standard P-5 and C-3.
- Horizontal configuration: 12' X 12' through 18' X 18'.

Structural Requirements. A mud sill foundation is designed to distribute the structural load over a greater area than normal by increasing the lateral dimension when the height of structure is increased. The timbers absorb the bearing load, the shear forces are taken by the corner pilings, and the overturning moment is resisted by the width of the foundation. For special isolated cases, guy wires can be used to further resist the overturning moments.

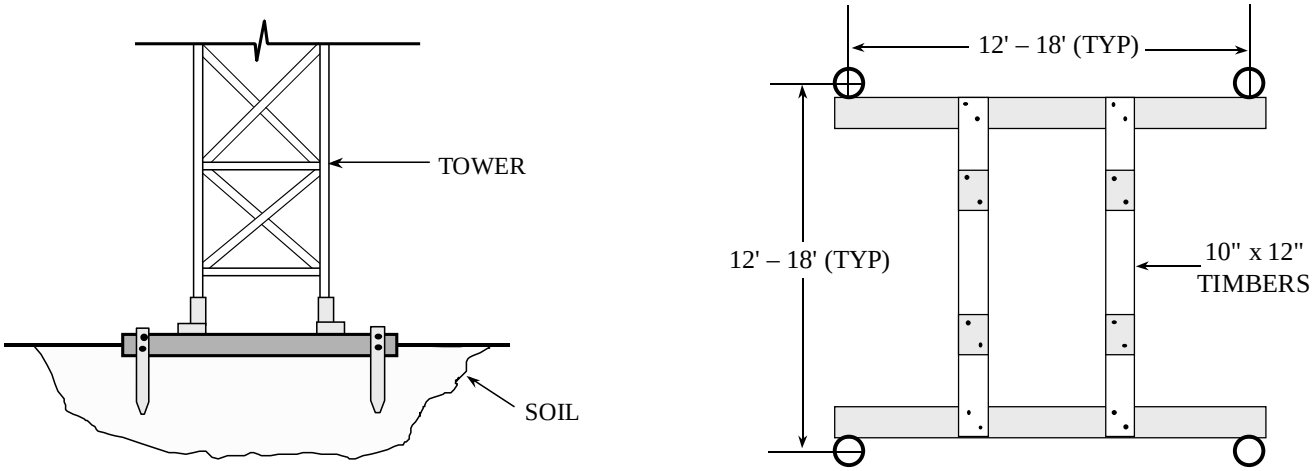

Figure 14-1 - Mud Sill Foundation

DATA SHEET 15 - CONCRETE FOUNDATION

Function. Concrete footings or concrete slab foundations are used to support structures on land.

Structural Requirements. Concrete footings and slabs shall be designed to be compatible with the design loads of the structure, the overturning moment developed by environmental forces, and the allowable bearing capacity of the soil.

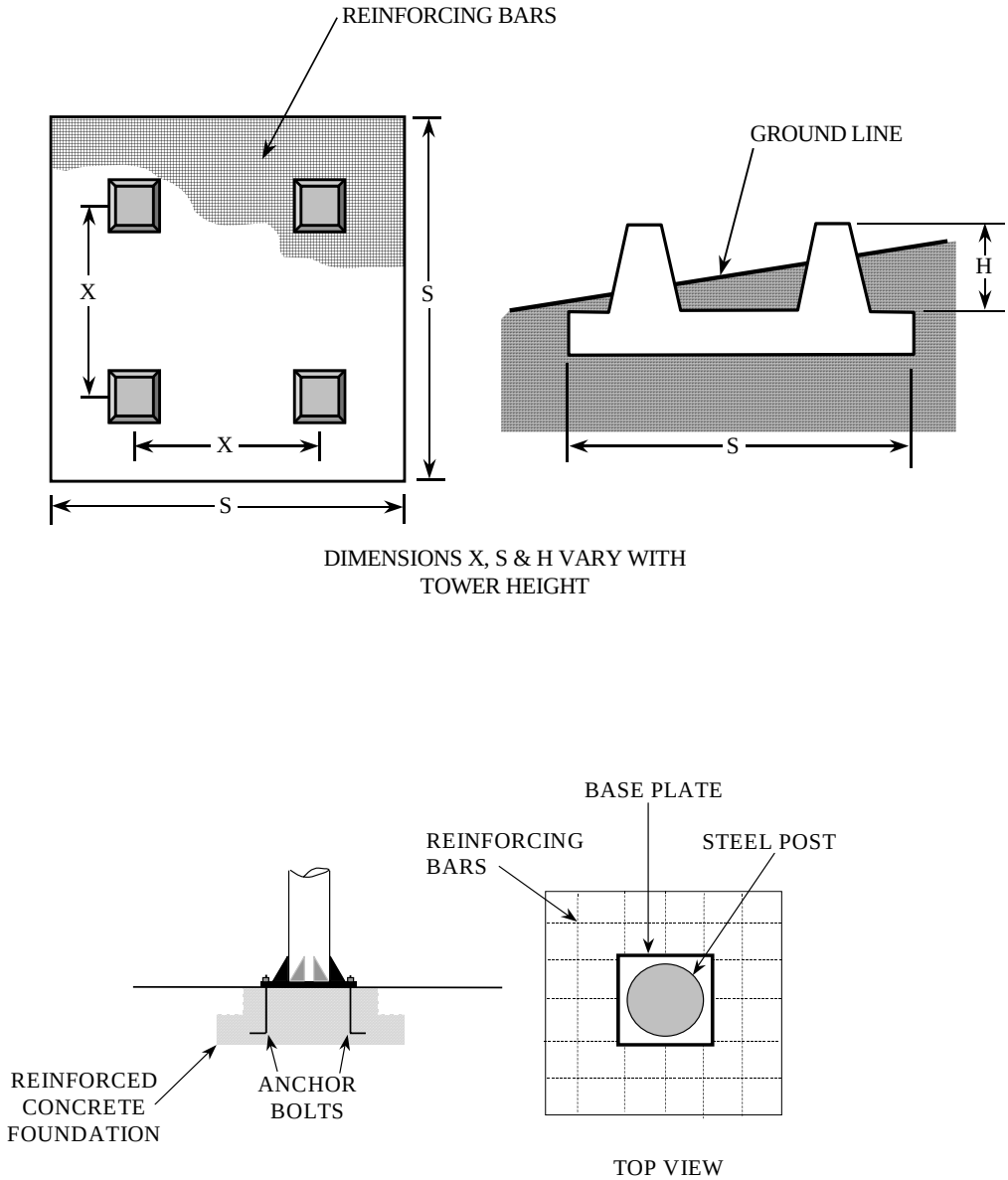

Figure 15-1 - Concrete Foundation

DATA SHEET 16 - RIPRAP FOUNDATION

Function. Riprap is a collection of relatively large-sized rocks that are placed together to protect the beacon structure and the signal equipment which it supports against ice or flooding.

Physical Characteristics.

Primary structural components: Class A rock, at least 85% consisting of rocks that weigh more than 2 tons each; class B rock, at least 60% consisting of rocks that weigh more than 100 lbs each; class C rock, rock smaller than class B, technically known as quarry waste.

Structural Requirements. Riprap shall be designed to protect against undermining and exposure of the beacon structure by properly using the weight and volume of the rock fragments to prevent washing away of the bottom.

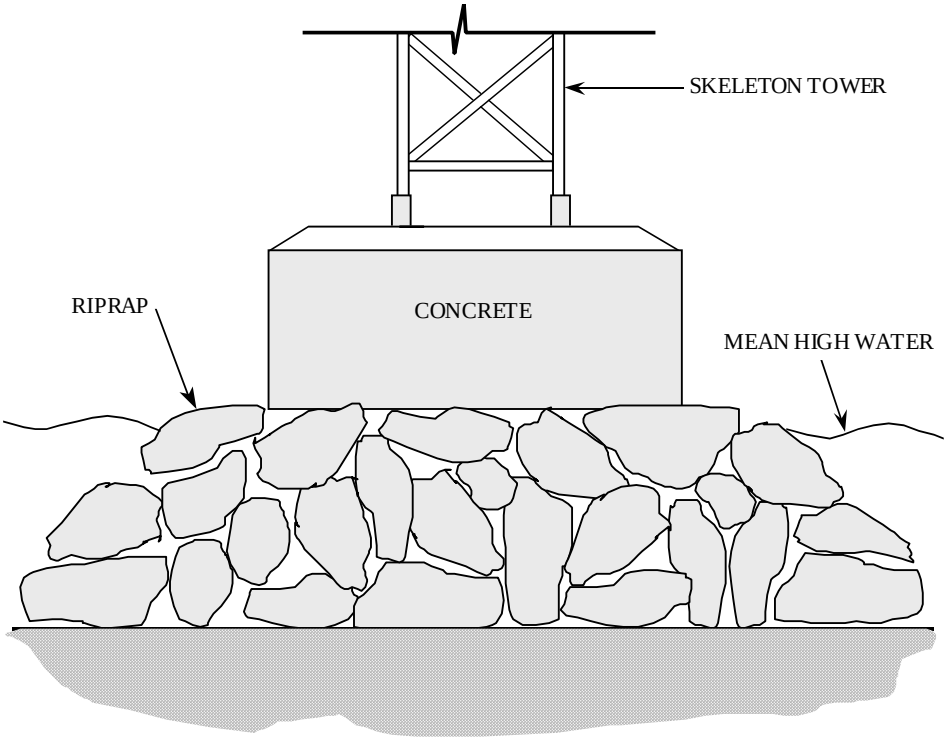

Figure 16-1 - Riprap Foundation

DATA SHEET 17 - STEEL STAKES FOUNDATION

Function. Steel stakes can be used as an effective and low-cost foundation to support skeleton towers on a rock surface. They can be used in lieu of a concrete foundation when the site location is not properly suited to concrete. Holes are drilled into the rock and anchor bolts are secured to the base plate. Rapid-setting grout is used to embed the bolts to form a firm foundation.

Structural Requirements. Steel stakes must be designed to resist the overturning moments of the structure that are developed by environmental forces.

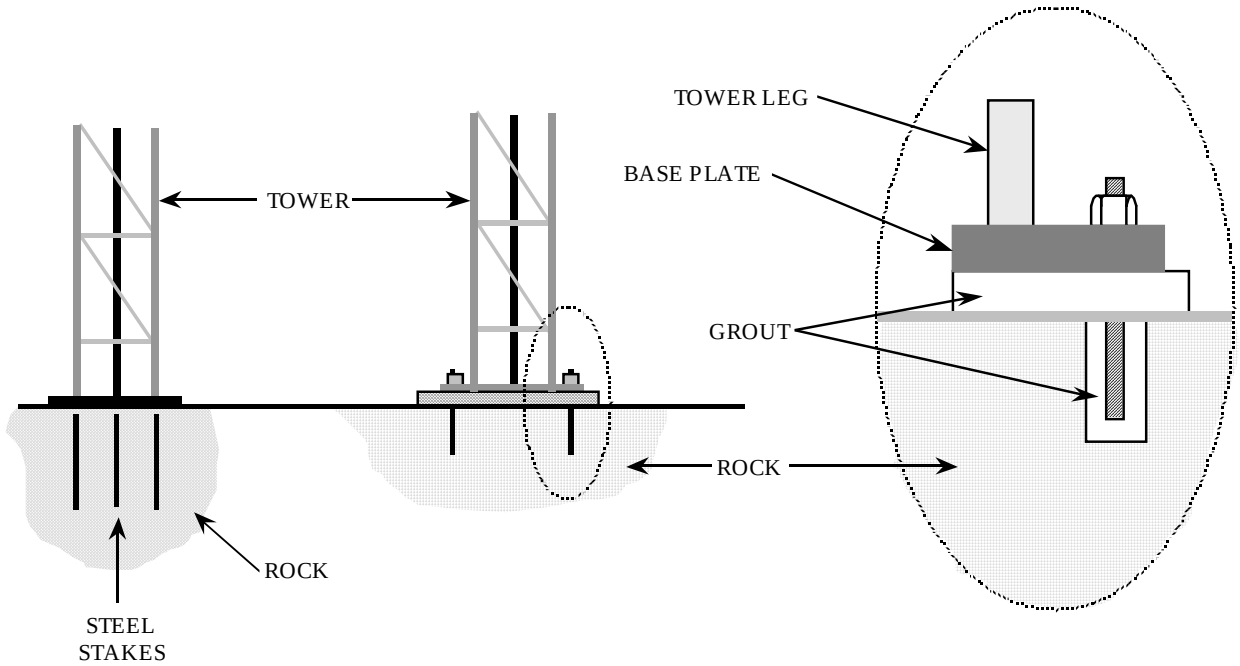

Figure 17-1 - Steel Stakes Foundation

DATA SHEET 18 - BATTERY BOX

Function. The standard Coast Guard large battery box is designed to hold up to a 1000-Ah series hookup of any of the primary batteries currently in use. A smaller model, designated the "small battery box", is designed to hold either two 12-volt or four 6-volt photovoltaic batteries. Both boxes are made of ABS plastic with a white acrylic plastic coating.

Structural Requirements. Battery boxes shall be securely fastened to the platform to withstand environmental forces.

Additional Data. The complete large battery box assembly includes a top and bottom, a stuffing tube, and a packing gland. The complete small battery box assembly contains the same items.

Available through Engineering Logistics Command Baltimore:

LARGE BATTERY BOX	(NSN 6140-01-029-6715)
SMALL BATTERY BOX	(NSN 6140-01-194-5777)
LARGE BATTERY BOX TOP	(NSN 6140-01-041-5030)
SMALL BATTERY BOX TOP	(NSN 6140-01-194-5781)

Available through National Stock System:

PLASTIC STUFFING TUBE – STRAIGHT	(NSN 5975-00-989-5046)
PLASTIC STUFFING TUBE-ANGULAR-45 DEGREE	(NSN 5975-00-989-5045)
NEOPRENE PACKING ASSEMBLY	(NSN 5330-00-202-2594)

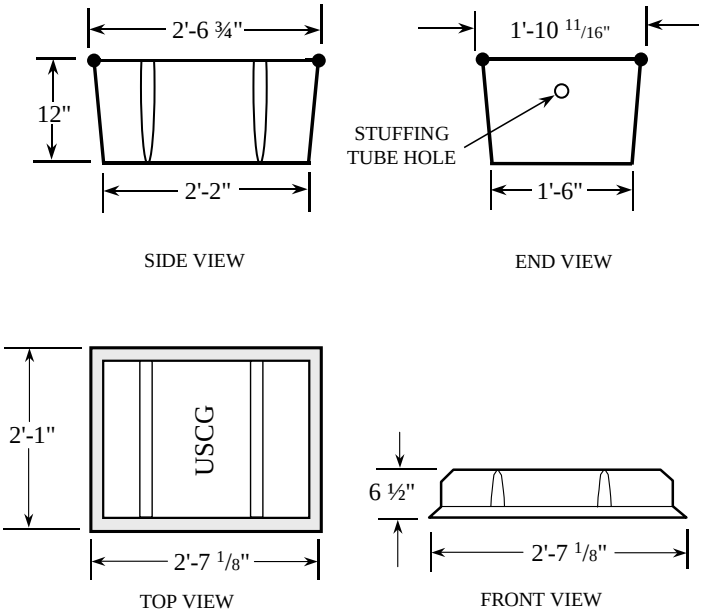

Figure 18-1 - Large Battery Box

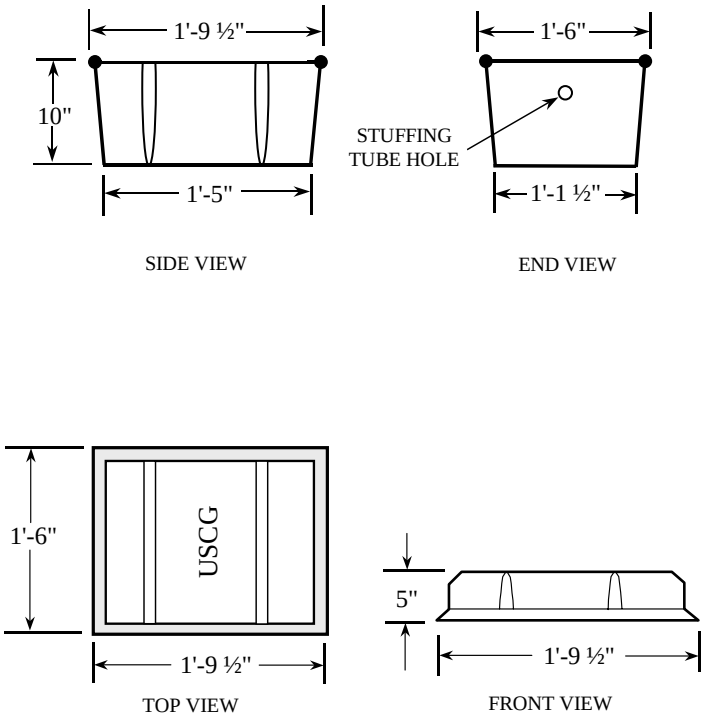

Figure 18-2 - Small Battery Box

DATA SHEET 19 - STRUCTURE RADAR REFLECTOR

Function. The structure radar reflector is designed to be installed on structures when the radar reflectivity of the structure does not meet the operational requirements.

Features.

- Galvanized steel construction.
- 1.5 to 2.0 nmi range (using two adds about 0.5 nmi).
- Weight: 8 lbs.

Additional Data. The structure radar reflector is to be manufactured or procured locally. A full-size construction drawing (Civil Engineering Drawing No. 121018) may be obtained from Commandant (G-SEC).

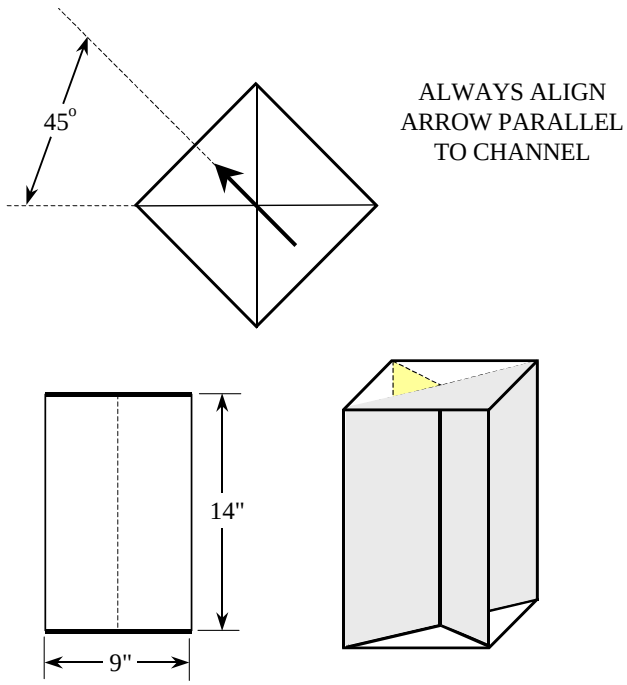

Figure 19-1 - Radar Reflector

DATA SHEET 20 FIXED AID LANTERN STAND ASSEMBLLY

Function. The fixed aid lantern stand assembly provides a convenient mount for an aids to navigation lantern, solar panel, and battery box. All lanterns described in Aids to Navigation Technical Manual, COMDTINST M.16500 (series), with the exception of the DCB-24/224, can be mounted on the stand. The stand is capable of supporting one solar panel, either 10, 20, or 35 watts in size, at three tilt angles, 15, 30, and 60 degrees from horizontal. The stand is mounted to a fixed aid to navigation, with the solar panel facing south, using either carriage or lag bolts.

Additional Data. The fixed aids to navigation stand is to be manufactured or procured locally. A full sized drawing (Civil Engineering Drawing No. 120978) is available from Commandant (G-SEC).

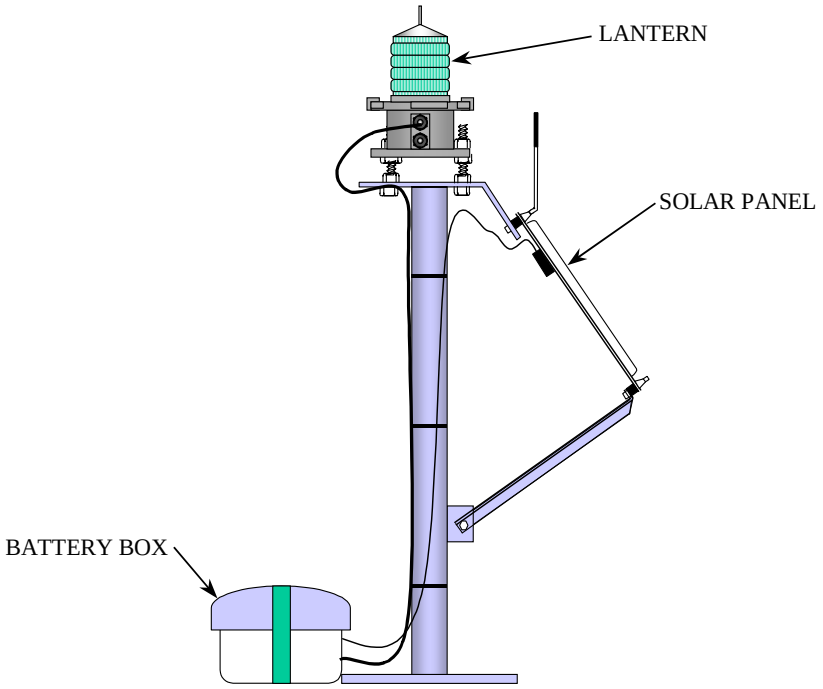

Figure 20-1 - Lantern Stand Assembly

DATA SHEET 21 - TETHERING OF ATON STRUCTURES

Function. The following measures will enhance the recovery of ATON batteries on downed structures. These measures are intended for use on single pile wood structures, but may be adapted for use on other structures types as necessary.

Background. Nearly 900 ATON structures are knocked down annually. Without utilizing the measures outlined in this Data Sheet, these knockdowns could result in lost batteries which the Coast Guard has the responsibility to retrieve. Ensuring recovery of these batteries without the costly need for divers is of paramount importance to the Coast Guard. Because the majority of single pile wood structures are in the Fifth, Seventh, and Eighth Districts, this guidance is primarily for those Districts. However, other Districts should consider installing similar preventive measures on structures in which there is a significant risk of the battery being lost. In the event that batteries are lost from a structure, reporting and tracking procedures are outlined in instructions referenced in Chapter 1 of this manual.

Features. Most knockdowns are caused by collisions from passing vessels. When a vessel hits a structure, the pile usually breaks and begins to float away, the platform is separated from the pile, and/or the battery is thrown from the battery box into the water. The following measures have been developed to prevent the loss of the battery in these situations, and are intended for use with the commercially-available "Rubber Queen" type battery box:

- Battery Bracing. The battery box is reinforced with steel end brackets, a top bracket, and a bottom "strong-back." The top bracket and the strong-back secure the battery to the platform. The end brackets, on both ends of the box, keep the battery from being thrown from the platform.

- Pile Tethering. The upper portion of the pile is tethered with chain to the lower end of the pile below the mud line. This will prevent the upper portion of the pile (wreckage) from floating away from the charted position after a collision.

- Platform Reinforcing. The platform is reinforced with steel angles to strengthen the connection between the platform decking and the A-frame. This will help hold the platform together during a collision.

- Platform Tethering. The platform is tethered with chain to the upper portion of the pile. This measure will ensure that the platform remains connected to the pile and on station with the other wreckage.

Guidance for each of these measures is provided below. The materials described herein are to be manufactured or procured locally. A detailed design drawing (Civil Engineering Drawing Number 121165) is available for download on the Commandant (G-SEC-2) Internet site, at http://www.uscg.mil/systems/gse/gse2/Drawings2B.htm.

Battery Bracing.

The top bracket and strong-back are made from 1/8 inch thick steel. Two 4-inch galvanized or stainless steel bolts (1/2 inch diameter) are placed through the strong-back holes and welded to the strong-back during fabrication.

Installation of the battery box bracing should begin by checking the intended placement of the battery box. The battery box shall be positioned so that none of the strong-back bolts or lag bolts are on cracks in the decking.

Once placement of the box has been determined, drill two holes (10 inches center to center apart) for the strong-back bolts. Fit the bolts of the strong-back up through the drilled holes, and lag the strong-back to the bottom of the decking through the hole in the center of the strong-back. This prevents the strong-back from falling into the water when the top bracket is removed during servicing.

Place the battery in the battery box. Leave the battery box cover off. Place the top bracket over the battery and outside of the box. The top bracket should be placed across the center of the battery between the terminals, but not touching them. The bracket will fit over both the Absolyte and Delco batteries. The handle of the Absolyte may be placed under the bracket. Non-conductive material, such as a watertight door gasket, may be used to improve the fit between the bracket and the battery. Secure the bracket to the strong-back bolts with washer and nut. Use the slotted holes on the bracket to "snug" the legs of the bracket against the box.

Secure the platform tether chain to one of the strong-back bolts using a second washer and nut. At each end of the battery box, firmly fit the end brackets against the box and lag bolt them to the decking.

Secure the battery box cover with fasteners, such as web straps, wire ties, or banding material. Wrap the fasteners around the box, parallel to the top bracket and on both sides of the top bracket.

See Figure 21-1 on the following page.

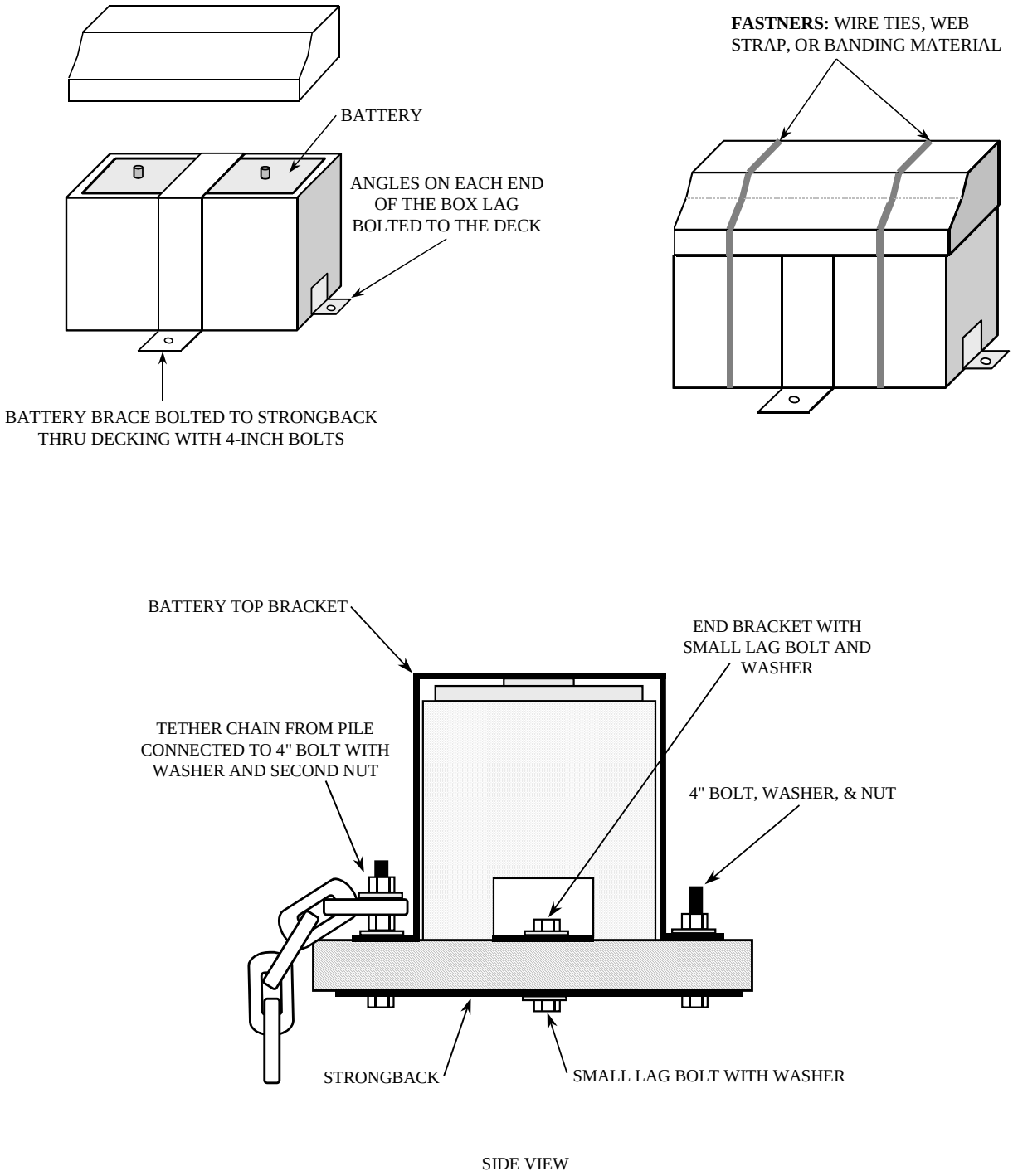

Figure 21-1 - Battery Bracing

Pile Tethering.

The following procedures refer to the tethering of a single pile wood structure. Multiple pile wood structures can also be tethered in this manner; in such a case, only one leg of the structure would need to be tethered.

1. Use 1/4 inch galvanized chain, available commercially.

2. Before driving the pile, attach one end of the tethering chain with a 3-inch lag bolt and flat washer, 10 feet below the estimated mud line. Piles usually break 5 foot below the mud line, so the chain must be attached below this point to be effective.

3. Attach the upper end of the tethering chain to the pile with a 6-inch lag bolt and flat washer. It should be located at a point that will be above the mud line and below the waterline when the pile is driven to its proper depth. A 1/4-inch screw pin shackle may be used in the upper link of the chain to accommodate the 6-inch lag bolt.

4. Leave enough slack between the upper and lower attachment points to keep the tethering chain from becoming taught and absorbing shock during a collision. The purpose of the tether is not to keep the pile from breaking, but to keep the wreckage on its charted position to reduce search time and increase the probability of recovery. During recovery, the 3-inch lag bolt connecting the wreckage to the stub will pull out under a slight strain. The recovered chain is then reusable.

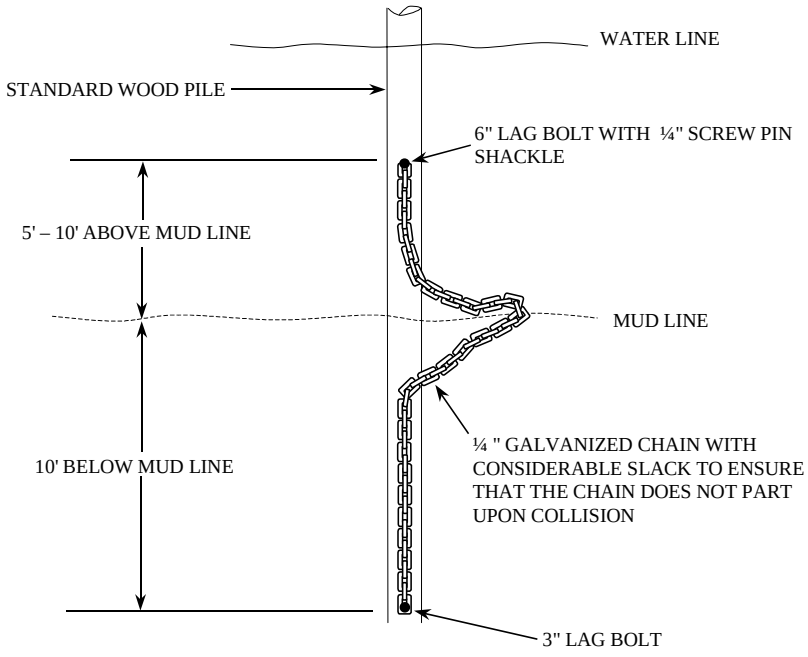

Figure 21-2 - Pile Tethering

Platform Reinforcement.

1. Use lag bolts in conjunction with steel angle brackets to strengthen the connection between the decking and the platform frame. The angles used should be at least 3x3x1/4 inch in size.

2. Use a sufficient number of additional lag bolts or through bolts to reinforce the connection of the platform frame to the piling. When possible, avoid lag bolting through the angle brackets into the pile. This is to keep the wood frame from splitting loose from the angle brackets where the lag bolts attach to the pile, if the platform is ripped from the pile during a collision.

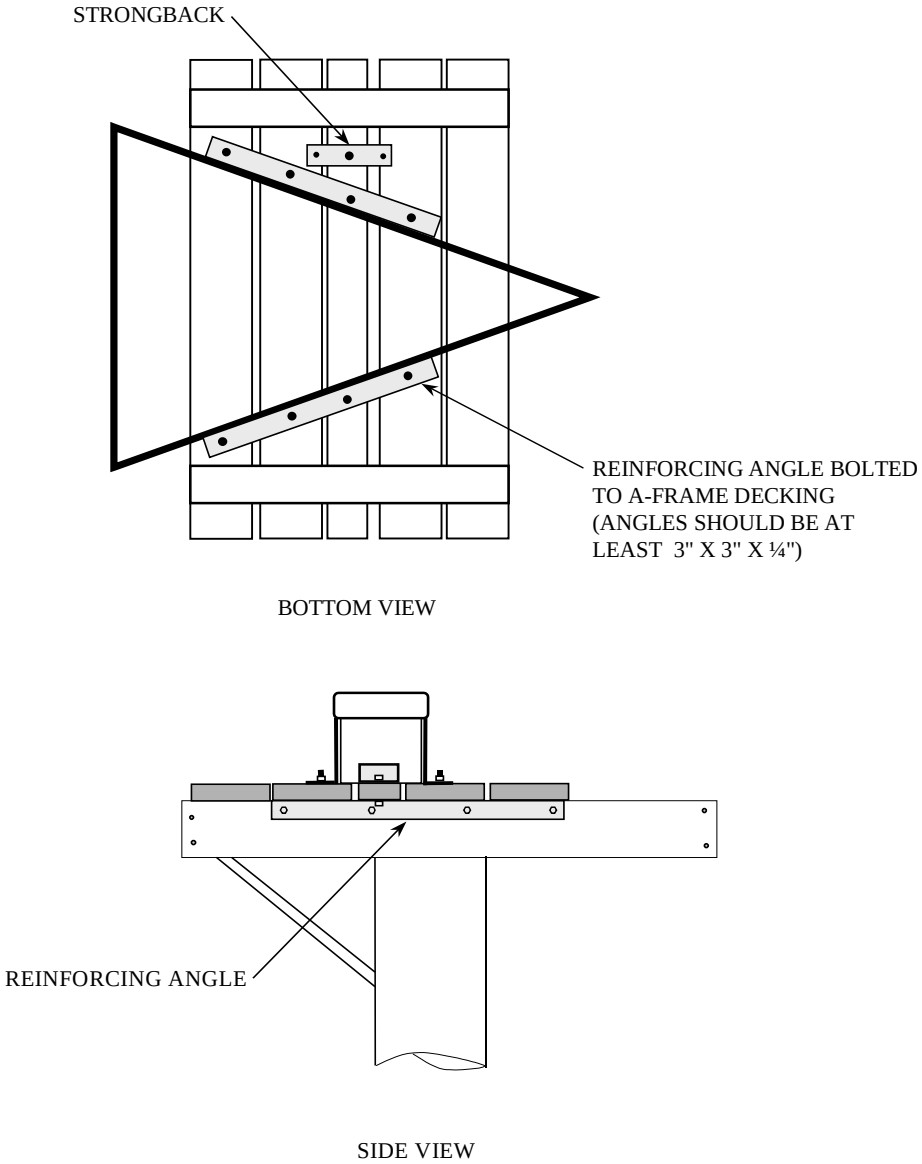

Figure 21-3 - Platform Reinforcement

Platform Tethering.

1. Use 3-inch lag bolts and flat washers to attach two 6-foot lengths of ¼-inch galvanized chain to the pile, 1 foot below the platform. The lengths of chain should be attached opposite each other on either side of the pile. Bolt the end of one of these chain lengths through the reinforcement angle bracket and into the A-frame, using a lag bolt and flat washer. Lead the end of the other chain length to the top of the platform, place the last link over one of the battery bracing bolts, and secure with a nut and flat washer.

2. These tethers are intended to perform a similar role to the one that connects the pile to the stub. They are not meant to keep the platform on the pile, but rather to keep the platform with the pile after it has been torn off.

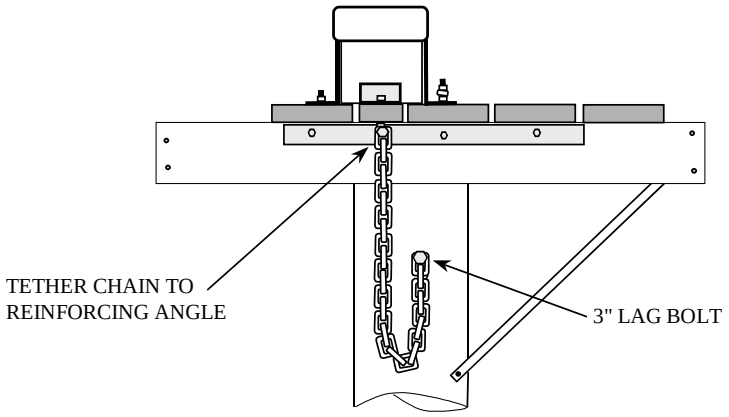

LEFT SIDE VIEW

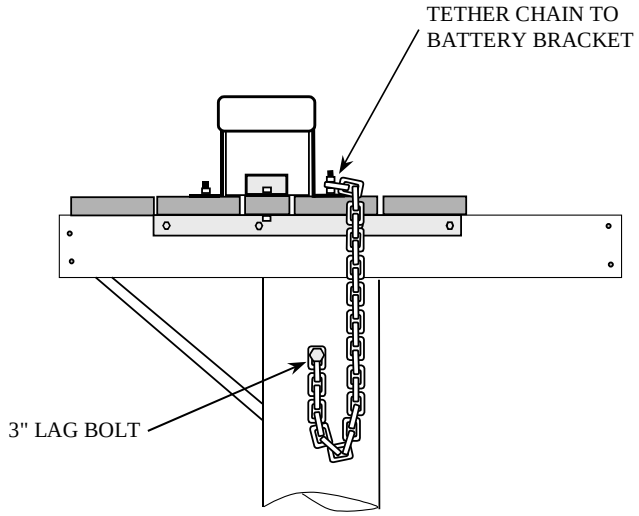

RIGHT SIDE VIEW

U.S. Department of Homeland Security

United States Coast Guard

AIDS TO NAVIGATION MANUAL - STRUCTURES

APPENDIX C

CLIMBING SAFETY AND RESCUE EQUIPMENT

COMDTINST M16500.25
NOVEMBER 2005

TABLE OF CONTENTS

Section	Page
1. Introduction	C-1
2. Personal Climbing Safety Equipment	C-3
3. Climbing Rescue Equipment	C-9
4. Climbing Rescue Training Equipment	C-14
5. Climbing Equipment Inspection and Maintenance	C-17

SECTION 1 - INTRODUCTION

General

The purpose of this Appendix is to provide guidance for field personnel who are required to purchase and/or maintain climbing safety and rescue equipment. The goal is to ensure that units servicing ATON structures are equipped with functional fall protection and rescue gear that meets or exceeds all applicable Federal requirements.

Climbing Safety and Rescue Equipment

For the purpose of this Appendix, fall protection and rescue gear will be broken down into three categories:

- Personal Climbing Safety Equipment. Personal climbing safety equipment refers to the climbing safety gear used by individuals while working on ATON structures. To ensure compliance with the fall protection guidance set forth in Chapter 4 of this manual, each unit servicing ATON structures should maintain enough sets of personal climbing safety equipment to outfit the number of climbers the unit may have working on a structure at one time. If only one climber will be working on a structure at a time, the unit should maintain a set of personal climbing gear for the member climbing the structure, plus one additional set of gear for the designated safety observer. A list of personal climbing safety equipment is found in Section 2 of this Appendix.

- Climbing Rescue Equipment. Climbing rescue equipment refers to equipment used to conduct rescues of fallen or injured climbers. Each unit should maintain one

complete set of climbing rescue equipment. A list of climbing rescue equipment is found in Section 3 of this Appendix.

- Climbing Rescue Training Equipment. Climbing rescue training equipment refers to safety backup systems which shall be used in conjunction with climbing rescue equipment during rescue training sessions, rescue practice scenarios, and other non-emergency environments. Each unit with a CEU-designated climbing safety and rescue trainer should maintain one complete set of climbing rescue training equipment. A list of climbing rescue training equipment is found in Section 4 of this Appendix.

Applicable Standards

Fall protection equipment including full body harnesses, work positioning lanyards, and fall arrest lanyards must meet the requirements of American National Standards Institute (ANSI) Z359.1-1992.

Climbing Equipment Inspection and Maintenance

Climbing safety equipment should be inspected prior to each use and after long periods of storage. Frequent inspections and maintenance prevent utilization of unsafe fall protection equipment, which could lead to injuries or fatalities. Inspection and maintenance of gear should be in accordance with the manufacturer's instructions supplied with each piece of gear. A general guideline for inspection and maintenance of climbing equipment is found in Section 5 of this Appendix.

SECTION 2 - PERSONAL CLIMBING SAFETY EQUIPMENT

General

Each set of personal climbing safety gear should consist of one full body harness (see Section 2, Note 1), one to two work positioning lanyards, one double legged fall arrest lanyard, and one safety climb sleeve or cable grab device.

Personal Climbing Safety Equipment List

Equipment Name	Required Features	Recommended Features
Full Body Harness	• Rated for: a. Fall arrest b. Work positioning / Fall restraint c. Suspension d. Ladder climbing • Front and back D-ring • D-ring on each hip for work positioning	• N/A
Work Positioning Lanyard (Fall Restraint Lanyard)	• Length: 18 inches to 6 feet • Double locking snaphooks on each end (see Section2, Note 2) • Lanyard connection to harness hip D-rings must be locking snaphook(s) with throat opening(s) of 3/4"	• Adjustable length lanyard
Fall Arrest Lanyard (Deceleration Device)	• Shock absorbing mechanism • Rated for fall arrest (maximum arresting force of 1800 lbs for use with a full body harness) • Length: up to 6 feet • Double locking snaphook or carabiner on each end • Lanyard connection to harness back D-ring must be a locking snaphook with a throat opening of 3/4"	• Double-legged (Y-type) lanyard • Minimum throat opening of 2" on locking snaphook or carabiner used for connection of lanyard to structure
Safety Climb Sleeve or Cable Grab	• Varies with installed safety climb systems	• N/A

Notes

1. All harnesses do not fit all body types and sizes; harnesses must fit snugly to operate properly. Universal-size harnesses may fit a majority of individuals at a unit; however, they will not typically fit small individuals. Additional full body harnesses may need to be maintained by the unit to accommodate these individuals.

2. Work positioning lanyards should be employed to provide symmetrical support for the body. Knowing how the lanyard will be connected to the full body harness and the structure to provide the necessary symmetrical support will aid in determining the appropriate size of the snaphooks and length of the lanyard. If the lanyard is to be hooked onto a full body harness hip D-ring, wrapped around a structure member, and then attached to the opposite hip D-ring, both snaphooks should have a throat opening of 3/4" and the lanyard should have an adjustable or fixed length in the range of 2 to 6 feet. (See Photo 2-3 for an example of an adjustable fall restraint lanyard.) If the fall restraint lanyard is to be hooked to both hip D-rings and then attached to a structure member with a large double locking snaphook integral to the lanyard, similar to the example shown in Photo 2-4, the snaphooks attached to the harness hip D-rings should have a throat opening of 3/4" and the snaphook to be attached to the structure should have a throat opening large enough to accommodate the diameter of the structural member (typically 1-1/2" to 2-1/4"). The length of the lanyard for the preceding case should be in the range of 18 inches to two feet. Snaphooks with throat openings of larger than 3/4" should never be hooked to full body harness D-rings for fall restraint or fall arrest due to the risk of side-loading the snaphook gate (which in most cases, is not designed for loading) and the possibility of the locking snaphook becoming unintentionally disengaged, known as rollout.

Photos of Personal Climbing Safety Equipment

- Full Body Harness

Photo 2-1 – Front View of Full Body Harness

Photo 2-2 – Rear View of Full Body Harness

Photos of Personal Climbing Safety Equipment (continued)

- Work Positioning Lanyards (Fall Restraint Lanyards)

Photo 2-3 – Adjustable Rope Work Positioning Lanyard with 3/4" Locking Snaphooks

Photo 2-4 – Webbing Work Positioning Lanyard with 3/4" Locking Snaphooks on Each End and a Large 2 1/4" Locking Snaphook for Fastening to Structure

Photos of Personal Climbing Safety Equipment (continued)

- Fall Arrest Lanyards

Photo 2-5 – Fall Arrest Lanyard with a Shock Absorber "Pack"
and Locking Carabiners for Fastening to the Structure

Photo 2-6 – Fall Arrest Lanyard with a Shock Absorber "Pack" and
Large Double Locking Snaphooks for Fastening to the Structure

Photos of Personal Climbing Safety Equipment (continued)

- Safety Climb Sleeve and Cable Grab

Photo 2-7 – Safety Climb Sleeve Used in Conjunction with Rigid Safety Rail

Photo 2-8 – Cable Grab Used in Conjunction with Fixed Cable Safety System

SECTION 3 - CLIMBING RESCUE EQUIPMENT

General

Each set of climbing rescue equipment should consist of a minimum of one rescue rope, six anchorage slings, one rope termination plate, eight carabiners, and one Fisk Descender. Except in the case of emergencies, rescue equipment shall be used in conjunction with backup equipment listed under climbing rescue training equipment.

Climbing Rescue Equipment List

Equipment Name	Required Features	Recommended Features
Rescue Rope (Fisk Descender Working Line)	• 10,000 lb minimum breaking strength	• Kernmantle rope • Length: height of tallest ATON structure in AOR + 10 feet • Per DBI/SALA requirements for use with Fisk Descenter
Anchorage Slings	• 5,000 lb minimum breaking strength for anchoring a safety line • 10,000 lb minimum breaking strength for anchoring a rescue line	• Steel, vinyl coated • Nylon webbing • Various lengths
Rope Termination Plate (see Section 3, Note 1)	• 10,000 lb Plate Strength • Used with 1/2" to 5/8" rescue rope	• N/A
Carabiners	• 5,000 lb minimum breaking strength • Automatic Double locking • Fall rated	• Aluminum • Steel • Variety of sizes
Fisk Descender (see Section 3, Note 2)	• N/A	• N/A

Notes

1. Rope termination plates allow for anchorage of a rescue rope to a structure without tying knots, which decreases rope strength. For rescue operations, termination plate must have a minimum breaking strength of 10,000 lbs. MSA Surety Rope Termination Plate is a recommended product for use with a 1/2" to 5/8" lifeline or

descent control line of double braid, kernmantle, or 3 strand braided rope. For rescue operations, the rope must have a minimum breaking strength of 10,000 lbs.

2. The Fisk Descender is manufactured solely by DBI/SALA and is currently the only rescue descent device used in climber safety and rescue training offered by CG CEUs. The Fisk Descender is appropriate for use with double braid or kernmantle ropes of 5/8" diameter or less. For rescue operations, rope must have a minimum breaking strength of 10,000 lbs.

Photos of Climbing Rescue Equipment

- Rescue Rope

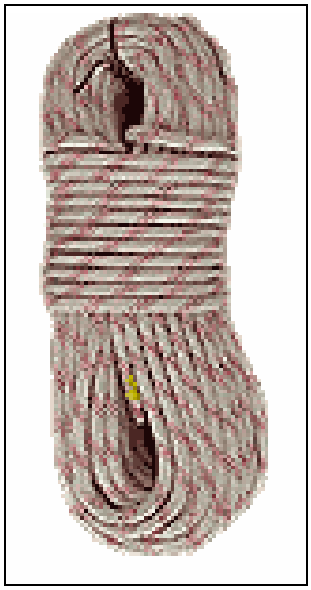

Photo 3-1 – Kernmantle Rescue Rope

Photo 3-2 – Close-Up View of Kernmantle Rope of Various Sizes

Photos of Climbing Rescue Equipment (continued)

- Anchor Slings

Photo 3-3 – Nylon Webbing Anchor Sling

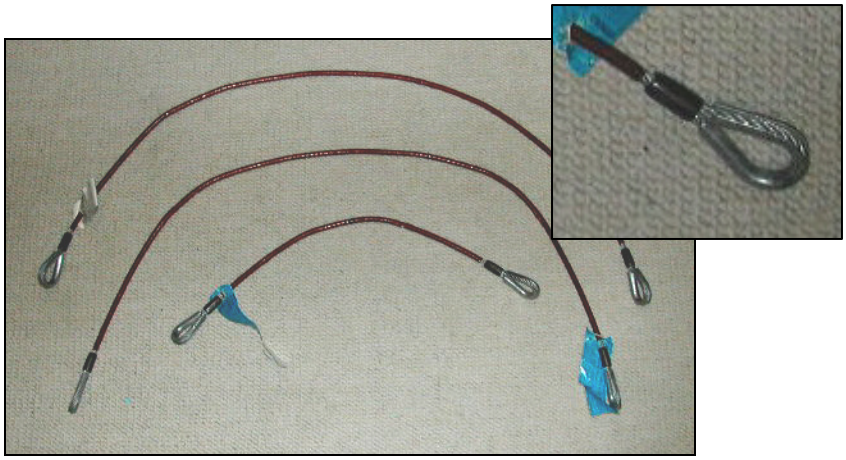

Photo 3-4 – Wire Rope Anchor Slings

Photos of Climbing Rescue Equipment (continued)

- Rope Termination Plate

Photo 3-5 – Rope Termination Plate by MSA Surety
Shown Rigged with Rope and Locking Carabiner

- Double Locking Carabiners

Photo 3-6 – Automatic Double Locking Carabiners
in a Variety of Sizes and Shapes

Photos of Climbing Rescue Equipment (continued)

- Fisk Descender

Photos 3-7 and 3-8 – Unrigged (on Left) and
Rigged Fisk Descender (on Right)

SECTION 4 - CLIMBING RESCUE TRAINING EQUIPMENT

General

Each set of climbing rescue training equipment should consist of a minimum of one vertical lifeline, one rope grab, one deceleration device, and one self retracting lanyard or suspension system. Rescue training equipment should always be used in conjunction with climbing rescue equipment listed in the previous section.

Rescue Training Equipment List

Equipment Name	Required Features	Recommended Features
Nylon Rope (Vertical Lifeline)	• 10,000 lb minimum breaking strength (typically 5/8" diameter rope)	• Length: height of tallest ATON structure in AOR + 10 feet
Rope Grab (For Use with Vertical Lifeline and Fall Arrest Lanyard)	• Compatible with nylon rope (vertical lifeline)	• Integral system with fall arrest lanyard
Fall Arrest Lanyard (For Use with Rope Grab)	• Shock absorbing mechanism • Rated for fall arrest • Length: 2 to 3 feet • Double locking snaphook with throat opening of 3/4" (to be hooked to back D-ring of full body harness)	• Integral system with rope grab device
Self Retracting Lanyard (SRL) or Suspension System	• Consult with cognizant CEU tower program manager to determine appropriate device (see Notes Section below)	• N/A

Notes

Due to the variety and complexity of SRLs and suspension systems, CEU qualified trainers should consult directly with the cognizant CEU tower program manager to determine what equipment is best suited for each particular training environment. Suspension systems often require a substantial initial investment and are cumbersome for use in training and practice environments; however, the systems provide adequate safety protection and require only minimum unit level maintenance. SRLs are typically less costly upfront and simpler to use than suspension systems, but most models require annual inspections by the manufacturer.

Photos of Climbing Rescue Training Equipment

- Vertical Lifeline

Photos 4-1 – Vertical Lifeline with Double Locking Snaphook on Connection End

- Rope Grab and Fall Arrest Lanyard

Photos 4-2 – Rope Grab with Attached Fall Arrest Lanyard

Photos of Climbing Rescue Training Equipment (continued)

- Self Retracting Lanyard and Rescue Suspension System

Photos 4-3 and 4-4 – Self Retracting Lanyard (on Left)
and Rescue Suspension System (on Right)

SECTION 5 - CLIMBING EQUIPMENT INSPECTION AND MAINTENANCE

General

This section breaks down general inspection steps and maintenance for climbing safety and rescue equipment listed previously in this Appendix. Each piece of fall protection equipment should be accompanied with a set of manufacturer's instructions for use, maintenance, and inspection. It is important that the manufacturer's instructions be consulted for each piece of equipment to determine any special inspection and maintenance procedures required before following the inspection and maintenance guidelines listed below.

Full Body Harness

- Inspection Steps.

  1. Inspect harness hardware (buckles, D-rings). These items must not be damaged, broken, or distorted, and must be free of sharp edges, burrs, cracks, worn parts, or corrosion.

  2. Inspect webbing. Material must be free from frayed, cut, or broken fibers. Check for tears, abrasions, mold, burns, or discoloration. Check for pulled or cut stitches. Broken stitches may be an indication that the harness has been impact loaded and must be removed from service.

  3. Inspect the labels. All labels should be present and fully legible.

  4. Inspect each system component or subsystem according to the manufacturer's instructions.

  5. Record the inspection date and results in an inspection and maintenance log.

  6. If inspection reveals a defective condition, remove the harness from service immediately and destroy it.

- Maintenance and Storage. Spot clean harness with a wet sponge. A mild soap may be used if necessary. DO NOT USE CHEMICALS OR DETERGENTS. Rinse off soap with clean water. Air dry by hanging harness by back D-ring out of direct sunlight. Store full body harness in a cool, dry, clean environment out of direct sunlight.

Work Positioning Lanyard

- Inspection Steps.

  1. Inspect lanyard hardware (double locking snap hooks, adjusters, thimbles, etc.). These items must not be damaged, broken, or distorted, and must be free of sharp edges, burrs, cracks, worn parts, or corrosion. Ensure the connecting hooks work properly. The hook gates must move freely and lock upon closing. Ensure the adjusters, if present, work properly.

  2. Inspect lanyard body per the following as applicable:
     a. Webbing and Stitching: Inspect the webbing. The material must be free from frayed, cut, or broken fibers. Check for tears, abrasions, mold, burns, or discoloration. The webbing must be free of knots, excessive soiling, heavy paint buildup, and rust staining. Check for chemical or heat damage, indicated by brown, discolored, or brittle areas. Check for ultraviolet damage, indicated by discoloration and the presence of splinters on the webbing surface. Check for pulled or cut stitches. All of these above factors are known to reduce the webbing strength. Damaged or questionable webbing should be removed from service and replaced.
     b. Synthetic Rope: Inspect the rope for concentrated wear. The material must be free from frayed, cut, or broken fibers. Rope splices must be tight. The rope must be free of knots, excessive soiling, heavy paint buildup, and rust staining. Check for chemical or heat damage, indicated by brown, discolored, or brittle areas. Check for ultraviolet damage, indicated by discoloration and the presence of splinters on the rope surface. All of these above factors are known to reduce the rope strength. Damaged or questionable ropes should be removed from service and replaced.

  3. Inspect the labels. All labels should be present and fully legible.

  4. Inspect each system component or subsystem according to the manufacturer's instructions.

  5. Record the inspection date and results in an inspection and maintenance log.

  6. If inspection reveals a defective condition, remove the lanyard from service immediately and destroy it.

- Maintenance and Storage. Spot clean lanyard with a wet sponge. A mild soap or detergent may be used if necessary. DO NOT USE CHEMICALS OR HARSH DETERGENTS. Rinse off soap with clean water. Hang to dry out of direct sunlight. DO NOT use high pressure to clean lanyards or hardware. Store work positioning lanyards in a cool, dry, clean environment out of direct sunlight.

Fall Arrest Lanyard

- Inspection Steps.

  1. Inspect the shock absorbing lanyard hardware (double locking snap hooks, locking carabiners, adjusters, thimbles,etc.). These items must not be damaged, broken, or distorted, and must be free of sharp edges, burrs, cracks, worn parts, or corrosion. Ensure the connecting hooks and/or carabiners work properly. The hook/carabiner gates must move freely and lock upon closing.

  2. Inspect the webbing. The material must be free from frayed, cut, or broken fibers. Check for tears, abrasions, mold, burns, or discoloration. The webbing must be free of knots, excessive soiling, heavy paint buildup, and rust staining. Check for chemical or heat damage, indicated by brown, discolored, or brittle areas. Check for ultraviolet damage, indicated by discoloration and the presence of splinters on the webbing surface. Check for pulled or cut stitches. All of these above factors are known to reduce the webbing strength. Damaged or questionable webbing should be removed from service and replaced.

  3. Inspect the shock absorbing component. Inspect the shock absorber to determine if it has been activated. There should be no evidence of elongation. Ensure the shock absorber "pack" cover is secure and not torn or damaged. The stitching internal to the deceleration lanyard package should be a contrasting color from the webbing and readily apparent if the deceleration device has been activated. On fall arrest lanyard models without a shock absorber "pack," the lanyard webbing will tear out to reveal the warning on the impact indicator if the device has been impact loaded.

  4. Inspect the labels. All labels should be present and fully legible.

  5. Inspect each system component or subsystem according to the manufacturer's instructions.

  6. Record the inspection date and results in an inspection and maintenance log.

  7. If inspection reveals a defective condition, remove the lanyard from service immediately and destroy it.

- Maintenance and Storage. Spot clean lanyard with a wet sponge. A mild soap or detergent may be used if necessary. DO NOT USE CHEMICALS OR HARSH DETERGENTS. Rinse off soap with clean water. Hang to dry out of direct sunlight. DO NOT use high pressure to clean lanyards or hardware. Store fall arrest lanyards in a cool, dry, clean environment out of direct sunlight.

Safety Climb Sleeve, Cable Grab, and Rope Grab

- Inspection Steps.

  1. Inspect the sleeve body and attached hardware (locking snaphooks, other connection devices, etc.). These items must not be damaged, broken, or distorted, and must be free of sharp edges, burrs, cracks, worn parts, or corrosion. Ensure the connecting hooks work properly. The hook gates must move freely and lock upon closing.

  2. Inspect the locking lever for smooth operation. The locking mechanism should spring back into its locked position when pressure is released.

  3. Inspect each system component or subsystem according to the manufacturer's instructions.

  4. Record the inspection date and results in an inspection and maintenance log.

  5. If inspection reveals a defective condition, remove the safety climb sleeve, cable grab, or rope grab from service immediately and destroy it.

- Maintenance and Storage. Safety climbing device may be cleaned using a commercial parts cleaning solvent. Rinse with warm, soapy water. Light machine oil may be used on moving parts if required. Do not use excessive oil, or allow oil to contact cable or rope clamping parts. Store safety climb sleeves, cable grabs, and rope grabs in a cool, dry, clean environment out of direct sunlight.

Rescue Rope and Vertical Lifeline

- Inspection Steps.

  1. Inspect rope connection hardware (double locking snap hooks or thimbles, etc.), if present. These items must not be damaged, broken, or distorted, and must be free of sharp edges, burrs, cracks, worn parts, or corrosion. Ensure the connecting hooks work properly; The hook gates must move freely and lock upon closing.

  2. Inspect the rope for concentrated wear. The rope must be free of frayed strands and broken yarns, cuts and abrasions, burns, and discoloration. Check for kinks in the line. Check for chemical or heat damage (brown or brittle areas). Inspect for heavily soiled areas, grit, oil, grease, paint, etc. Check for ultraviolet damage, indicated by discoloration and the presence of splinters on the rope surface. All of these above factors are known to reduce the rope strength.

  3. Untie any knots and inspect the rope in the knot area.

Rescue Rope and Vertical Lifeline (continued)

4. Record the inspection date and results in an inspection and maintenance log.

5. If inspection reveals a defective condition, remove the rope from service immediately and destroy it.

- Maintenance and Storage. Clean rope with a water and mild soap solution. Rinse with clean water and thoroughly air dry. Store ropes in a cool, dry, clean environment out of direct sunlight.

Anchor Slings

- Inspection Steps.

1. Inspect anchor sling hardware (D-rings, O-rings, thimbles, etc.). These items must not be damaged, broken, or distorted, and must be free of sharp edges, burrs, cracks, worn parts, or corrosion.

2. Inspect anchor sling body per the following as applicable:
   a. Webbing and Stitching: Inspect the webbing. The material must be free from frayed, cut, or broken fibers. Check for tears, abrasions, mold, burns, or discoloration. Check for pulled or cut stitches. The webbing must be free of knots, excessive soiling, heavy paint buildup, and rust staining. Check for chemical or heat damage, indicated by brown, discolored, or brittle areas. Check for ultraviolet damage, indicated by discoloration and the presence of splinters on the webbing surface. All of these above factors are known to reduce the webbing strength. Damaged or questionable anchor slings should be removed from service and replaced.
   b. Wire Rope: Inspect the entire length of wire rope. (Always wear protective gloves when inspecting wire rope.) Inspect for broken wires by passing cable through gloved hands, flexing the rope every few inches to expose breaks. Do not pull broken wires out of the rope. Consult manufacturer's instructions for details on proper procedures for removal and tolerance of broken wires on rope. Inspect wire rope for corrosion. Damaged or questionable slings should be removed from service and replaced.

3. Inspect the labels. All labels should be present and fully legible.

4. Inspect each system component or subsystem according to manufacturer's instructions.

5. Record the inspection date and results in an inspection and maintenance log.

6. If inspection reveals a defective condition, remove the sling from service immediately and destroy it.

Anchor Slings (continued)

- Maintenance and Storage. Clean anchor slings with water and a mild detergent solution. Rinse off with clean water. Wipe off hardware with a clean, dry cloth and hang to air dry out of direct sunlight. Store anchor slings in a cool, dry, clean environment out of direct sunlight.

Connection Hardware (Rope Termination Plate, Carabiners, and Fisk Descender)

- Inspection Steps.

  1. Inspect connection hardware for damage. Look carefully for cracks, sharp edges, burrs, dents or deformities. Check for bending or distortion. Inspect for excessive corrosion. The gate and lock on carabiners should operate smoothly with no difficulty. Gate must fully close and engage nose of hook.

  2. Inspect markings. Markings should be present and fully legible.

  3. Inspect each system component or subsystem according to the manufacturer's instructions.

  4. Record the inspection date and results in an inspection and maintenance log.

  5. If inspection reveals a defective condition, remove the hardware from service immediately and destroy it.

- Maintenance and Storage. Clean rope termination plate and Fisk Descender using water and a mild soap solution. Rinse off with clean water. Wipe off with a clean, dry cloth. If gate operation on carabiner is sluggish, apply a small amount of WD-40 or similar agent to the hinge end only. Store connection hardware in a cool, dry, clean environment out of direct sunlight.

Self Retracting Lanyard and Suspension System

- Inspection Steps. Consult with manufacturer's instructions for inspection requirements. SRLs typically require periodic inspections performed by the manufacturer.

- Maintenance and Storage. Consult manufacturer's instructions for maintenance requirements.