U.S. Department of Transportation
United States Coast Guard

Commandant (G-SEC-2)
United States Coast Guard

Washington D.C 20593-0001
Phone (202) 279-1380

COMDTINST M16500.4B
JUN 3 1997

COMMANDANT INSTRUCTION M16500.4B

Subj: RANGE DESIGN MANUAL

1. PURPOSE. This Manual contains general guidance for the design of two-station ranges as well as specific instructions on the use of a computer program for the detailed design of two-station ranges.

2. ACTION. Area and District Commanders, Commanders of Maintenance and Logistics Commands, Commanding Officers of Civil Engineering Units, Commanding Officers of Headquarters units, Assistant Commandants for Directorates, Chief Counsel, and special staff offices at Headquarters shall ensure that personnel working with ranges use this manual and the computer program in the design and evaluation of ranges.

3. DIRECTIVES AFFECTED. COMDTINST M16500.4A, Range Design, is canceled.

4. DISCUSSION. The following changes from COMDTINST M16500.4A have been made:

   a. The computer program is designed to operate on the Coast Guard Standard Workstation III (SWIII) in Microsoft Excel.

   b. The computer program is available for use by District and CEU personnel for designing new ranges or evaluating existing ones.

   c. This manual is organized to provide step-by-step instructions for the use of the range design program on the SWIII and to provide practical guidelines for the design of ranges in U.S. waters.

5. CHANGES. Recommendations for improvements to this manual or the computer program shall be submitted to Commandant (G-SEC-2).

E. C. KARNIS
Director of Engineering

Standard Distribution List Breakdown:

SDL	*Unit Name*	*Copies Each*	*Number of Units*	*Total*
A:m	Buoy Tenders, Seagoing	2	27	54
A:n	Buoy Tenders, Coastal	2	11	22
A:o	Buoy Tenders, Inland (Large)	2	2	4
A:p	Buoy Tenders, Inland (Small)	2	4	8
A:q	Construction Tenders, Inland	2	15	30
A:r	Buoy Tenders, River (Large)	2	1	2
A:s	Buoy Tenders, River (Small)	2	18	36
B:b	Area Offices	8	2	16
B:c	District Offices/MLCs*	20*	12	240
	*MLCLANT and MLCPAC, 6 extra			6
B:e	Academy	2	1	2
B:n	Reserve Training Center	6	1	6
B:o	R & D Center	3	1	3
B:y	C2CEN	2	1	2
C:d	Bases	2	11	22
C:f	Facility Design & Construction Centers	2	2	4
C:g	CEUs	3	9	27
D:a	Section Offices	1	3	3
D:d	Group Offices	2	53	106
D:z	National Data Buoy Center	2	1	2
	G-SEC	20	1	20
	G-OPN	4	1	4
	Total Number of Copies			619

TABLE OF CONTENTS

Chapter 1 - Introduction

A. Purpose
B. Program Availability
C. Special features
D. New Advice

Chapter 2 - Range Design Discussion

A. Definition of a Range
B. Views of a Range
C. Channel Length
D. Off Axis Distance
E. Lateral Sensitivity, The Cross-Track Factor
F. Beam Width of Range Lights
G. Dayboards or Daytime Lights
H. Considerations Regarding Intensities
I. Standard Range Characteristics
J. Visibility Values

Chapter 3 - Program Operation

A. System Requirements
B. Running the Program
C. On-Screen Display for SWIII
D. Input Data
E. Output Data
F. Printing the Spreadsheet
G. Single-Point-in-Time Performance Run
H. Range Light Signal Selection

Chapter 4 - Trouble Shooting

A. Problem Codes
B. Dayboard Problem Codes
C. Problems and Fixes
D. When Maximum Intensity is less than the Recommended / Minimum Intensity
E. Range Design is an Art
F. Compromises During Range Design

Chapter 5 - Range Configurations & Design Constraints

A. Introduction
B. Tower Placement
C. Beacon Placement
D. Additional Lights
E. Servicing Considerations
F. Construction Details
G. Safety
H. Dayboards

Enclosures:

1. Range Category Selection Aid
2. Standard Range Equipment Configurations
3. Visibility Data Tables
4. Range Light Signal Performance Data
5. Sample Range Design Printout
6. Range Design Worksheet

CHAPTER 1 - INTRODUCTION

A. Purpose. The purpose of this publication is to enable a person with little or no familiarity with the fundamentals of range design to make use of the updated range design computer program.

B. Program Availability. The computer program is available from Commandant (G-SEC-2) on an IBM 3-1/2 inch 1.44MB floppy disk. The program is designed to operate on the SWIII terminal in Microsoft Excel.

C. Special Features. The new computer program differs from the old range design program in the following ways:

1. The new format of the program on Excel is much more user-friendly, and allows the range design variables to be entered in any order.

2. The output of the program is immediately displayed. Changes to any of the variables has an immediate effect on the output.

3. The program gives recommended intensities in addition to the minimum and maximum intensities.

4. The program evaluates the performance of both existing and proposed optics.

5. Dayboard, daytime optic, and nighttime optic range performance is available.

6. Lateral Sensitivity is expressed as Cross-Track Factor and lends a more physical feel to the performance of the range.

D. New advice is provided in Chapter 5 on standard range configurations and practical constraints on the design of ranges. Addressing these issues will enable the novice designer to produce range designs that perform as expected and can be safely maintained by servicing units

CHAPTER 2 - RANGE DESIGN DISCUSSION

A. Definition of a Range. A range is a pair of lights or marks (dayboards) or both used to mark a line of definite bearing, commonly the centerline of a channel. Vertical alignment of these lights or marks defines the centerline of a channel. Range lights are called "leading lights" by IALA because they "lead" a vessel down a channel.

B. Views of a Range.

1. Plan View. Figure 2-1 shows a plan view of a range and defines some variables.

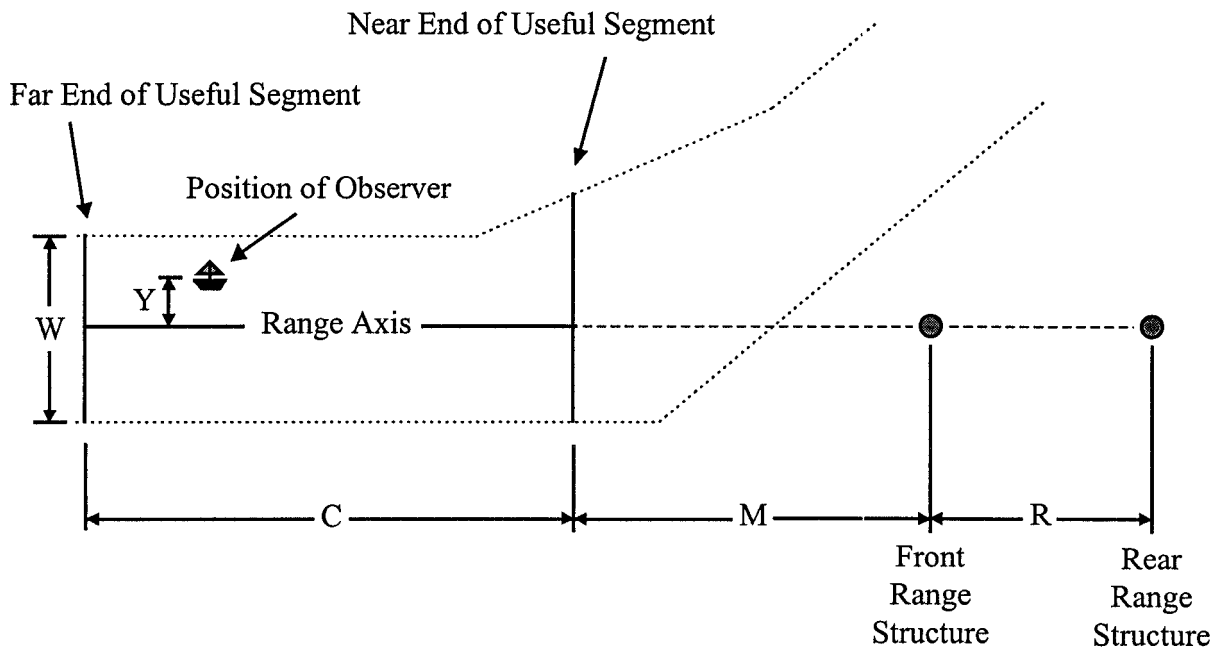

C = Length of useful (channel) segment.
W = Width of useful segment.
M = Distance to front structure from near end of useful segment.
R = Distance between range structures.
Y = Distance of observer from range axis.

Figure 2-1. Plan view of a range.

2. Side View. Figure 2-2 is a side view of range structures with some additional variables of interest defined.

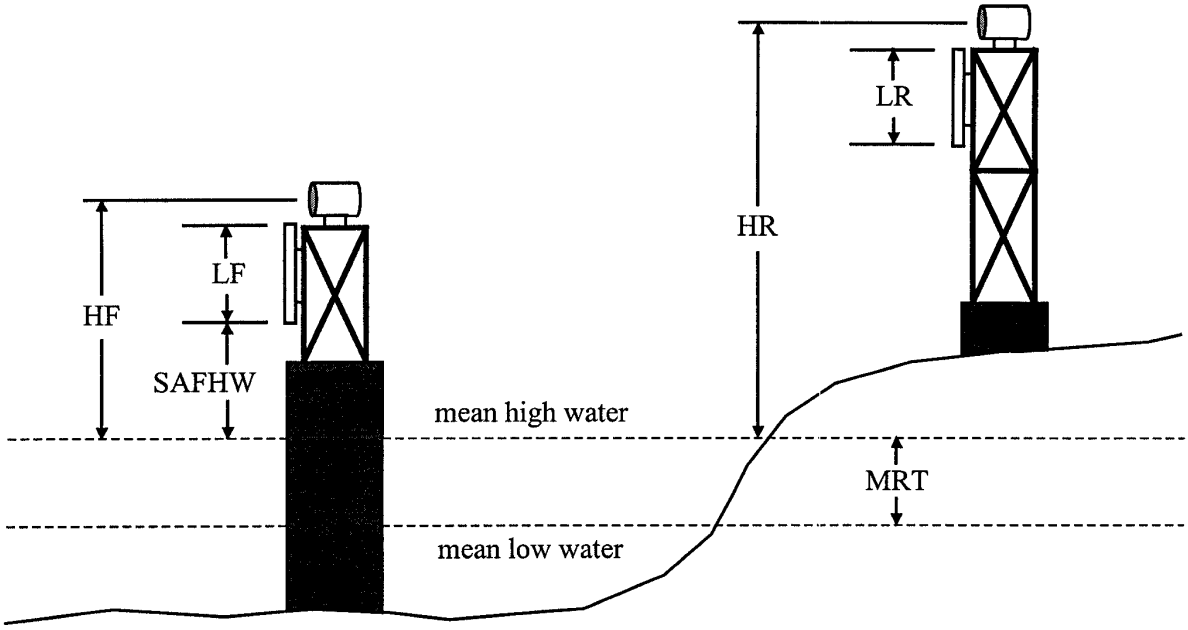

LF = Length of front dayboard.
LR = Length of rear dayboard.
HF = Height of front range light above mean high water.
HR = Height of rear range light above mean high water.
SAFHW = Safe height above water.
MRT = Mean range of tide.

Figure 2-2. Side view of range structures

3. Front View. Figure 2-3 is a front view of a range with a ship located to the right of the range axis. It also shows the horizontal and vertical angles created by the lights as viewed by the observer.

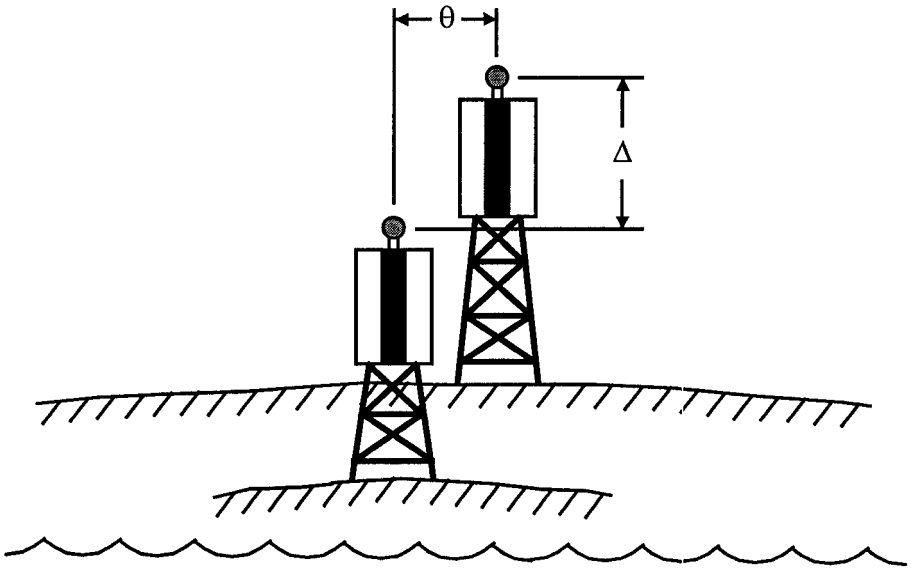

θ = Horizontal angle created by the lights.
Δ = Vertical angle created by the lights.

Figure 2-3. Front view of a range.

C. Channel Length. The preliminary decision in designing a range is to specify the segment of water which the range is to serve. Generally, it is costly to build a range to serve a long channel. This results from the requirements that the rear range light be of sufficient height to be clearly visible above the front range light when viewed from the far end of the channel, and that the dayboards are visible from the far end of the channel. Therefore, the rear tower must be not only taller, but also considerably sturdier in order to support the dayboard in conditions of heavy wind loading. The use of alternative aids may reduce the overall cost of marking the waterway by reducing the portion of the channel marked by the range.

D. Off Axis Distance. The off axis distance is the perpendicular distance from the range's centerline at which the observer will detect with certainty that the range lights are no longer vertically aligned (Figure 2-4). This distance must leave sufficient room for the various "nautical margins" needed to navigate the channel with safety. These margins result from such factors as the width of ships navigating the channel, the amplitude of possible yaws of those ships, extra widths required for vessels to pass each other, the angle between the range bearing and the head of the ship when it is affected by cross winds and currents, and other factors relating to the maneuverability of the ship.

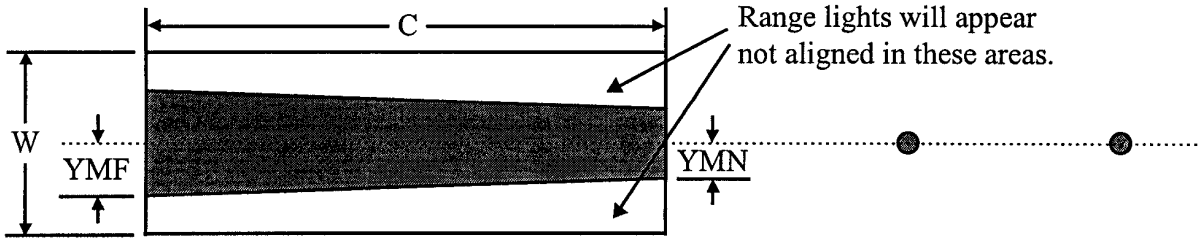

where: YMF = off axis distance far
YMN = off axis distance near

Figure 2-4. Off axis distance of a range.

E. Lateral Sensitivity, The Cross-Track Factor.

1. Cross-Track Factor. The cross-track factor is defined to be the lateral distance at which a mariner can detect with certainty that a vessel is not on the channel centerline, divided by half the channel width, and expressed as a percentage. A cross-track factor of 25% indicates that a mariner may be as far as 25% of the way towards the edge of the channel when he can detect, with certainty, that he is off centerline. When using cross-track factor as an expression of lateral sensitivity, a higher cross-track factor implies a lower sensitivity, and vice versa.

2. Current Policy on Acceptable Cross-Track Factors. Table 2-1 provides guidelines on the description and acceptability of various cross-track factors.

3. Instead of setting upper (%) limits on the cross-track factor, it is present policy that the designer weigh the nautical margins available against the fear that passing vessels will be overly confined (a small (%) cross-track factor may result in increased risk of collision between passing vessels).

   a. If the cross-track factor at the far end is adequate, chances are good that the cross-track factor at the near end is much smaller. If there are marks at the turning point at the near end, they will allow the mariner to judge the edge of the channel, and the small cross-track factor may be of no concern.

   b. When a small cross track factor is a problem, the range design can be modified to have an identical cross-track factor at the far end, but the cross-track factor at the near end will not be as small. Figure 2-5 illustrates the situation where the cross-track factor at the far end is identical, but the cross-track factor at the near end varies with the two designs. By moving the range structures back from the near end of the channel and increasing M and R, the cross-track factor at the near end is increased while keeping the cross-track factor at the far end the same.

Table 2-1

Cross-Track Factor*

Values of Cross-Track Factor	Description	Interpretation
Over 75%	Not Acceptable	Range must be improved or it will be unworkable.
50% - 75%	Poor	Decrease the cross-track factor if physically possible.
30% - 50%	Fair	Decrease the cross-track factor only if moderate cost involved.
20% - 30%	Good	Decrease the cross-track factor only if little cost involved.
15% - 20%	Very Good	Do not expend more funds to decrease the cross-track factor.
10% - 15%	Excellent	The cross-track factor should not be less than 10% at the far end of the channel.

*Use this table using the cross-track factor 1354at the far end of the channel.

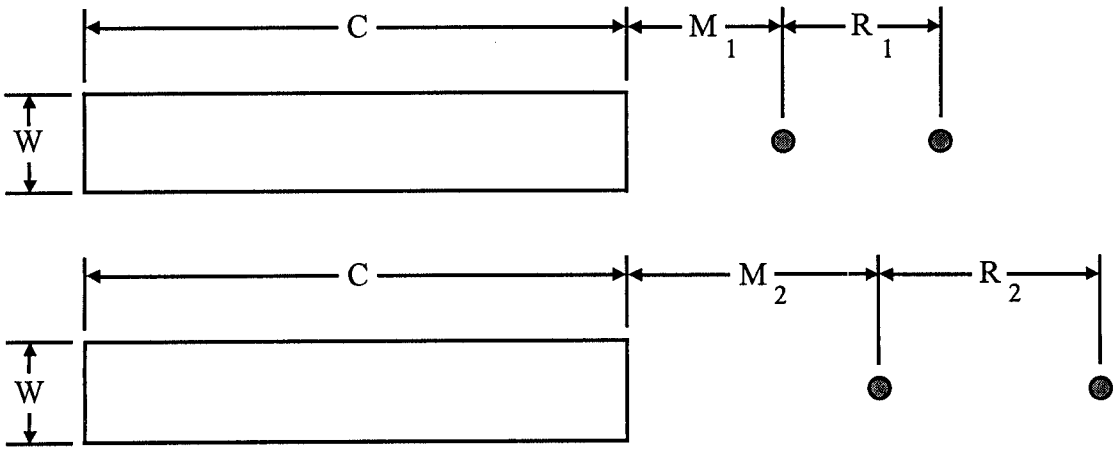

Figure 2-5. Two range designs having the same cross-track factor at the far end but different cross-track factors at the near end.

4. Range Design Selection. Usually the range shown on the bottom of Figure 2-5 will give better service because the cross-track factor does not vary as much between the near and far ends, and the illuminance produced by each light on the eye of the user will be more nearly equal along the entire length of the channel. On the other hand this design might require larger dayboards, taller towers, or lights of increased intensity. It is up to the range designer to select the design that is most appropriate for the given situation.

F. Beam Width of Range Lights.

1. Spread Lens. There is often confusion regarding the effect of a narrow spread lens on the sensitivity of a range. The beam width of the optic has nothing to do with the lateral sensitivity of a range. The beam width is of some concern when a narrow spread lens is used, such as the RL-14 optic with a 3 degree spread lens (3 degree beam width between 50% intensity points) or a 250mm optic with a condensing panel (2 degree beam width between 50% intensity points). Care must be taken to ensure that minimum intensities listed in the printout are in fact provided by the lighting hardware over the full width of the channel. The angle subtended at the far end of the useful segment, ϕ, (see Figure 2-6) is given by:

$$\phi \text{ (in degrees)} = (57.3 \text{ degrees/radian}) \left(\frac{W}{X}\right)$$

2. The need for acquisition of the range lights prior to turning onto a range should also be considered when selecting the beam width of the range lights. In order to reach the first useful segment of the range it will often be necessary to observe at least one of the range lights in a region to seaward or to the side of it. This is called the "acquisition region." The selected range lights should have a beam width sufficient to cover the desired acquisition point.

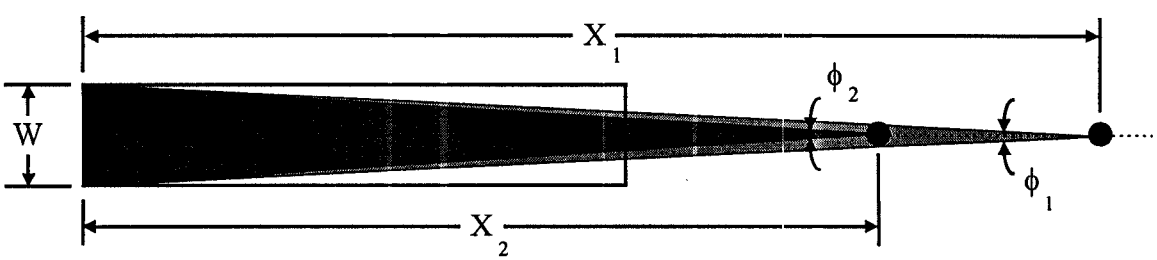

Figure 2-6. Spread Lens Angles.

G. Dayboards or Daytime Lights. Traditionally the lights on ranges, particularly those powered by batteries, were secured during daylight. The daytime signal was provided by dayboards. Recent efficiency improvements in optics combined with solar power have allowed expanded use of daytime lighted ranges, even when commercial power is not readily available. The following are some points to consider when deciding on the daytime signal:

1. Dayboards are simple. Having no moving parts they require little maintenance and so are more reliable than lights. The smaller boards are easy to maintain. No special training is required.

2. Daytime lights provide a superior signal. In marginal conditions they can be seen further than dayboards. Substituting lights for large dayboards may result in less costly tower structures and foundations. There will, however, be more complex lighting and power systems which will increase the technical demands on our Aids to Navigation Team personnel. There will also be higher initial equipment cost, but tower costs will be lower due to smaller towers.

3. The Range Category Selection Aid (Enclosure (1)) contains a decision guide and range category descriptions to assist in determining the type of range to provide. Area and District personnel shall also consider the following when a WAMS analysis establishes the need to construct a new range or replace an existing range:

   a. Dayboards are not necessary when daytime lights are provided.

   b. Distances less than 2 nautical miles, as measured from the rear structure to the far end of the channel, are usually best marked by dayboards. The nighttime signal can usually be provided with standard omnidirectional lanterns and associated equipment. Daytime range lights should only be considered in areas prone to poor meteorological visibilities.

   c. Distances greater than 4 nautical miles are best marked by daytime range lights provided there is an operational requirement to mark the entire channel.

      (1) The existence of a long channel does not in itself justify the need to mark the entire channel with a range.

      (2) Daytime lights may not mark the entire channel in lower visibility conditions, but they will still exceed range dayboard capabilities.

      (3) A range light controller may be required on long reaches because of the significant differences in intensities required to provide both day and night signals. Should the lights on both structures fail to switch in a short time the range would effectively be unusable since the daytime light would

overpower the nighttime light. The Range Category Selection Aid (Enclosure (1)) contains criteria for using range light controllers.

d. Distances between 2 and 4 nautical miles should be marked as operationally required or as economically as possible. It may be that a lighted daytime range is not required but the system lifecycle cost of a lighted range might be lower than using dayboards.

e. Projects to establish daytime range lights shall be forwarded to Commandant (G-OPN-2) for operational approval. Commandant (G-SEC-2) will provide input for range design and equipment selection. Enclosure (2) presents block diagrams of signal, power, and control systems for each of the eight established USCG standard range configurations.

H. Considerations Regarding Intensities.

1. Nighttime lights should be of sufficient intensity to mark the entire channel length for 90% of the nights. The "Minimum Intensity" values provided by the program will provide adequate signals; however, higher intensities will provide better signals. Experience has shown that intensity values ten times greater than the minimum values will provide a better signal. Therefore, the program provides a "Recommended Intensity" that is approximately ten times the Minimum Intensity and provides a good illuminance balance. It is often easy to provide the Recommended Intensities and therefore provide not just an adequate, but a good signal.

2. Daytime lights should be of sufficient intensity to maximize the percentage of time that the channel is adequately marked. If you can meet the "Minimum Intensity" you do not need to go beyond that intensity. If you can't meet the "Minimum Intensity" put in the brightest light possible.

I. Standard Range Characteristics.

1. Standard light characteristics for ranges are:

Front	Rear
Fixed (F) *	Fixed (F) *
Occulting 4 (Occ 4) *	Occulting 4 (Occ 4) *
Isophase 6 (Iso 6)	Isophase 6 (Iso 6)
Isophase 2 (Iso 2)	
Flashing 2.5 (1) (Fl 2.5 (1))	
Quick Flash (Q) w	

Notes: * Not recommended for solar power applications.
w Only for lamps rated for 2.03a and less.

2. Fixed (F) characteristics should be used sparingly, if at all. Lights displaying a fixed characteristic, especially white light signals can be difficult to identify against even minimal background lighting. Furthermore, lights displaying an Occ 4 or Iso 6 characteristic provide approximately 92% of the intensity of a fixed light signal, yield longer lamp service intervals, have lower power consumption, and provide greater conspicuity than the fixed light signal.

J. Visibility Values.

1. In 1988, the U.S. Coast Guard Research and Development Center studied several years of National Weather Service coastal visibility data in order to update the values of visibility used for aid-to-navigation planning along the coastal U.S. and Great Lakes. The tables in Enclosure (3) provide these updated values for 80 and 90 percent of the time.

2. The tables, in order, are for Alaska, Hawaii, West Coast, Great Lakes, East Coast, and Florida & Gulf Coasts. The values are presented in one-degree grids for each of these regions. To find the visibility value, enter the appropriate table using the whole number degree (rounded down) of latitude and longitude for the position of the aid. For example, for an aid located at 39 20.9' N & 123 49.6' W, enter the table at LAT = 39 & LONG = 123. Note, the values provided in the tables are based on averaging the data collected within each one-degree grid over a 30 year period. The values are valid for all sections of the one-degree grid. Therefore, interpolation between adjacent grids should not be performed.

3. The values from these tables are entered in the program as Minimum Visibility (nm).

CHAPTER 3 - PROGRAM OPERATION

A. System Requirements. You need a Coast Guard Standard Workstation III or an IBM PC computer system with Windows 3.1 or later and Microsoft Excel 3.0 or later.

B. Running the Program. Turn on your computer. If you have the range design program on a floppy disk insert it into the computer and copy the file onto your hard disk. Remove the floppy disk and store it in a safe place. Do not do any work on the floppy disk, this is the master copy. Open your Microsoft Excel program. Under the **Tools** menu move down and select the **Options...** command. Select the **Edit** tab and uncheck (disable) the **Enable AutoComplete for Cell Values** option. Then click on the **OK** button. Next at the top left of the screen click the **File** menu and move down to the **Open...** command. Select the range design program (which should be on your hard drive) and open it. DO NOT ATTEMPT TO ALTER THE PROGRAM IN ANY WAY.

C. On-Screen Display for SWIII. In order to see the entire range design spreadsheet on the SWIII computer screen there are several options. Under the **View** menu select (check mark) the **Full Screen** command. If you still can't see the whole spread sheet, under the **View** menu select the **Toolbars...** command and make sure all the toolbars are deselected. Finally if you still can't see the whole spread sheet, under the **View** menu select the **Zoom...** command and check **Custom Magnification** and enter **63%.** For PCs which are not SWIII use trial and error to find a magnification number which allows the entire spreadsheet to be viewed on the display. Contact G-SEC-2A for additional support.

D. Input Data. You can enter any of the range parameters at any time, however when first starting out it is best to enter the data in order. Enclosure (4) provides a sample of a range design input screen. Data is entered in any input cell that appears shaded (using Windows default colors) and outlined with a box. All input cells require data unless otherwise indicated. If any required input cells are left empty the Cross Track Factor, Off Axis Distance, and Delta will not be computed correctly.

1. **Range Name** - Enter the name of the range.

2. **Night or Day Lights** - Enter either an "N" for nighttime range lights or a "D" for daytime range lights (Note, separate runs are required for ranges using daytime and nighttime lights).

3. **Length of Channel (C)** - Enter the length of the channel in feet.

4. **Width of Channel (W)** - Enter the width of the channel in feet.

5. **Mean Range of Tide (MRT)** - Enter the mean range of the tides in feet. It is the difference between mean high water and mean low water for the design area.

6. **Background Lighting** - Enter the amount of background lighting that is present, either "None," "Minor," or "Considerable." Minor background lighting refers to widely spaced lights and/or dim lights such as residential lighting. Considerable background lighting refers to numerous lights and/or very bright lights such as parking lots, highways, factories, and industrial lighting that compete with the intensity of the range lights.

7. **Height of Eye (HOE)** - Enter the height of eye of one to three observers above the water in feet. The HOE is located in the center of the spreadsheet in 3 places.

8. **Minimum Visibility** - Enter the minimum visibility for which the range is designed in nautical miles. Generally it is the visibility that occurs 90% of the time for the location of the range. Enclosure (3) provides tables of visibility data for the coastal U.S. and the Great Lakes. Use the LAT and LONG of the ranges, round down to a whole degree, and find the corresponding visibility in Enclosure (3).

9. **Design Visibility** - Enter the design visibility in nautical miles. A value of 10nm is recommended.

10. **Maximum Visibility** - Enter the maximum visibility for which the range is designed in nautical miles. For practical considerations, a value of 20nm is recommended.

11. **Distance Between RFL & RRL (R)** - Enter the distance between the range structures in feet.

12. **Distance RFL to Near End Channel (M)** - Enter the distance from the near end of the channel to the front range structure in feet.

13. **Safe Height Above Water (SAFHW)** - Enter the safe height of the range above water in feet. It is the minimum distance required to keep the front dayboard/optic from being damaged by wave action, spring tides, or vandals.

14. **Dayboards To Be Used** - Enter a "Y" to use dayboards or an "N" for no dayboards.

15. **Obstructions** - Enter the distance from the near end of the channel to the obstruction(s) in feet, and the height of the obstruction(s) in feet.

16. **RFL Selected Dayboard Length** - Enter the length of the front dayboard in feet. Ignore this block if not using dayboards or enter "None".

17. **RRL Selected Dayboard Length** - Enter the length of the rear dayboard in feet. Ignore this block if not using dayboards or enter "None"

18. **RFL Selected Intensity** - Enter the intensity of the front range light that most closely meets the Recommended Intensity taking into account the color, rhythm, and

spread lens (see section "F" for more details). If there is more than one optic simply multiply the intensity by the number of optics.

19. **RRL Selected Intensity** - Enter the intensity of the rear range light that most closely meets the Recommended Intensity taking into account the color, rhythm, and spread lens (see section "F" for more details). If there is more than one optic simply multiply the intensity by the number of optics.

20. **Selected Height RFL** - Enter the height of the focal plane of the front optic in feet from MHW. Use separate heights for day and night lights (see Chapter 5 for more details).

21. **Selected Height RRL** - Enter the height of the focal plane of the rear optic in feet from MHW. Use separate heights for day and night lights (see Chapter 5 for more details).

The following variables are not necessary to run the program, but are valuable simply for the information they contain:

22. **(# of) Optics** - Enter the number of optics and type of optic used. For example: (2) RL-14, (1) RL-24, (1) 250mm, etc.

23. **Lamp** - Enter the type of lamp used in the optic. For example: 0.77a, 2.03a, 50w, 1000w, etc.

24. **Lens / Color** - Enter the type of lens used and the color. For example: 0 deg / Clear, 8 deg / Red, CP / Green, etc. (CP = condensing panel)

25. **Characteristic** - Enter the flash characteristic and color. For example: Iso 2 W, Fl 2.5 (1) R, Occ 4 G, F W, etc.

E. Output Data. A sample of the output data is included as enclosure

(5). The output data is immediately computed upon entering any variable. The output can be sent to a printer or saved under a different file name. It is best to save daytime and nighttime calculations under different filenames to avoid confusion. Explanations of the outputs:

1. **Recommended Dayboard Length** - The recommended length of the dayboard in feet for the given minimum visibility.

2. **Minimum Intensity** - The minimum intensity (in candela) required to ensure the range light is useable at the far end of the channel for the given minimum visibility. For daytime lighted ranges the program only provides values for the minimum required intensities.

3. **Recommended Intensity** - The recommended intensity (in candela) to assist the mariner in detecting, recognizing, and using the range lights. This value is approximately ten times the minimum intensity and takes into account illuminance balance.

4. **Maximum Intensity** - The maximum intensity (in candela) allowable for the range light, to prevent glare for the given maximum visibility.

5. **Recommended IR/IF** - The recommended intensity ratio for the rear and front optics where:

$$IR/IF = \frac{\text{Recommended Rear Light Intensity}}{\text{Recommended Front Light Intensity}}$$

6. **IR/IF for Selected Intensities** - The intensity ratio for the selected optics.

7. **Recommended Min Height** - The recommended focal plane height of the optic.

8. **Distance from Near End** - The distance of the observer from the near end of the channel at ten evenly spaced intervals along the entire length of the channel.

9. **Cross-Track Factor** - The cross-track factor at the indicated distance from the near end of the channel.

10. **Off Axis Distance** - The distance perpendicular to the range axis (in feet) needed to indicate to the observer that they are off the range axis, at the indicated distance from the near end of the channel.

11. **Delta (mrad) (MLW)** - The apparent vertical angle subtended by the range lights (vertical angle separation) in milliradians, at the indicated distance from the near end of the channel.

12. **Illuminance Ratios & Values** - Provides information on the apparent brightness of the two range optics for the selected design visibility, at the indicated distance from the near end of the channel.

13. **Problem Codes** - Chapter 4 discusses Problem Codes and Dayboard Problem Codes which may appear on the range design output sheet. The sample sheet provided as enclosure (5) shows all the potential problem codes for informational purposes

F. Printing the Spreadsheet. For the program to print properly go to the **File** menu and select the **Page Setup...** command. Under the **Page** tab change the **Orientation** to **Landscape** and ensure the **Scaling** is **Adjusted to 70%**. Also ensure that under the **Margins** tab all the margins (including the header and footer) are set to **0.25** inches. And make sure that in **Center on Page** both **Horizontally** and **Vertically** are checked. Do not adjust any other parameters.

Now you are ready to print by either clicking on the Print icon on the tool bar, or under the **File** menu selecting the **Print...** command. Enclosure (5) provides a sample range design printout.

G. Single-Point-in-Time Performance Run. To see how the range will perform on a given day with a given visibility enter the same visibility for Minimum, Design, and Maximum Visibility. The output is a snapshot of how the range will perform for that given visibility.

H. Range Light Signal Selection.

1. Use the Range Design Program to determine the recommended intensities for the front and rear range optics.

2. Use the Range Category Selection Aid (Enclosure (1)) and the Range Light Signal Performance Data (Enclosure (4)) to identify which optics will give acceptable intensities.

3. Select the combination of lantern, lens (color/spread), lamp (12-VDC or 120-VAC), and rhythm which best meets the desired intensities, and which has adequate beamwidths to cover the required region (see Chapter 2, Section "F"). When possible, use of omnidirectional lanterns is highly desirable, as the signal can be acquired even when vessels are well off the channel centerline. The use of omnidirectional lanterns also precludes the requirement for passing lights on range towers in navigable waters. Refer to Chapter 5 for advice on the practical details of tower placement, multiple beacon mounting schemes, and aid maintainability.

4. A 50 watt and higher 12VDC lamp requires a high-wattage lampchanger and a high-wattage flasher (CG-481).

5. If more than two lanterns are needed on a single range for daytime use, the design should be discussed with G-SEC-2 staff prior to submission to consider alternate methods of marking the waterway with standard configurations.

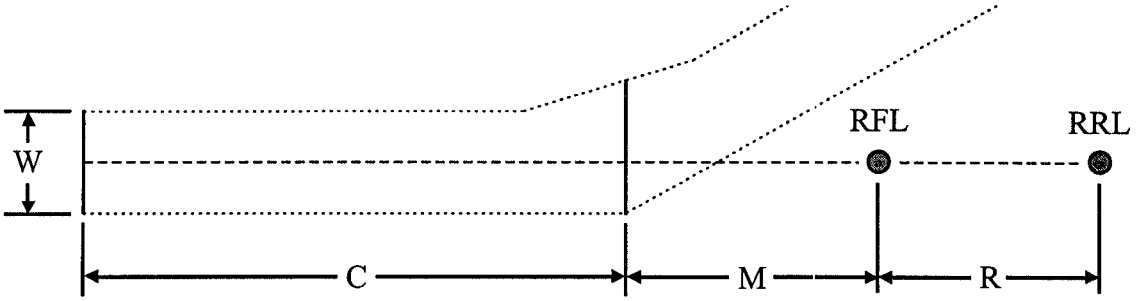

Figure 4-1. Range Diagram.

A. Problem Codes. Below is a list of the possible problem codes that may be displayed while running the range design program.

1. **Lights will blur.**
2. **Cross Track Factor too big.**
3. **RFL not bright enough in min visibility.**
4. **RRL not bright enough in min visibility.**
5. **RFL exceeds glare limit in max visibility.**
6. **RRL exceeds glare limit in max visibility.**
7. **RFL Dayboard too small in min visibility.**
8. **RRL Dayboard too small in min visibility.**
9. **RRL appears lower than RFL.**
10. **RFL below Safe Height Above Water.**
11. **RFL below the horizon.**
12. **Obstruction #1 obstructs RFL.**
13. **Obstruction #1 obstructs RRL.**
14. **Obstruction #2 obstructs RFL.**
15. **Obstruction #2 obstructs RRL.**

B. Dayboard Problem Codes. Below is a list of the possible dayboard problem codes that may be displayed while running the range design program.

1. **Portion of RFL board below horizon.**
2. **RFL board below Safe Ht Above Water.**
3. **RFL obscures part of RRL board.**
4. **RFL obstructs more than 1/2 RRL board.**
5. **Obstruction #1 obstructs RFL dayboard.**
6. **Obstruction #1 obstructs RRL dayboard.**
7. **Obstruction #2 obstructs RFL dayboard.**
8. **Obstruction #2 obstructs RRL dayboard.**

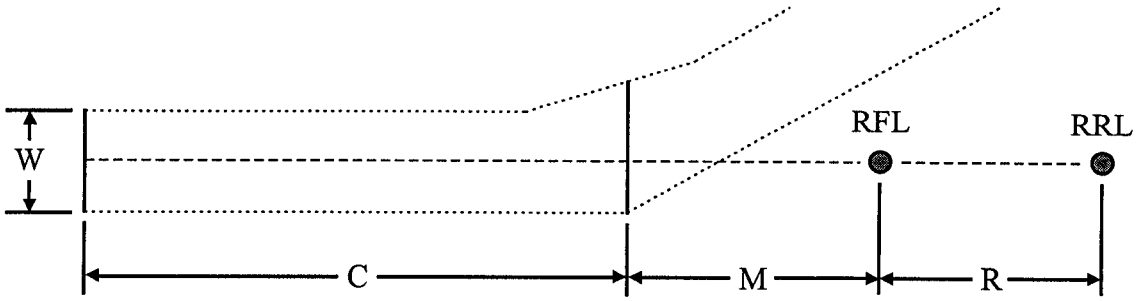

Figure 4-2. Range Diagram.

C. Problems and Fixes. Here are some problems with suggested fixes and possible downsides to the fixes. Common problem codes are grouped together.

PROBLEM CODES:

	Problem	Possible Fix	Downside
1.	**Lights will blur.**	Raise RRL.	Extra cost; decreased sensitivities.
		Reduce intensities.	Lights harder to acquire & use.
		Lower RFL.	Closer to water.
		Decrease C.	May not meet users requirements.
2.	**Cross Track Factor too big.**	Increase R.	May need real estate; extra cost; will increase RRL height.
		Increase RFL height or decrease RRL height.	Lights may blur.
3, 4.	**RFL (RRL) not bright enough in min visibility.**	Increase intensity.	May cause glare/blur; extra cost.
5, 6.	**RFL (RRL) exceeds glare limit in max visibility.**	Reduce intensity.	Light harder to acquire & use.
		Increase M.	May need real estate; extra cost.
7, 8.	**RFL (RRL) dayboard too small in min visibility.**	Increase dayboard size.	Extra cost.
		Use daytime lights.	Extra initial equipment cost

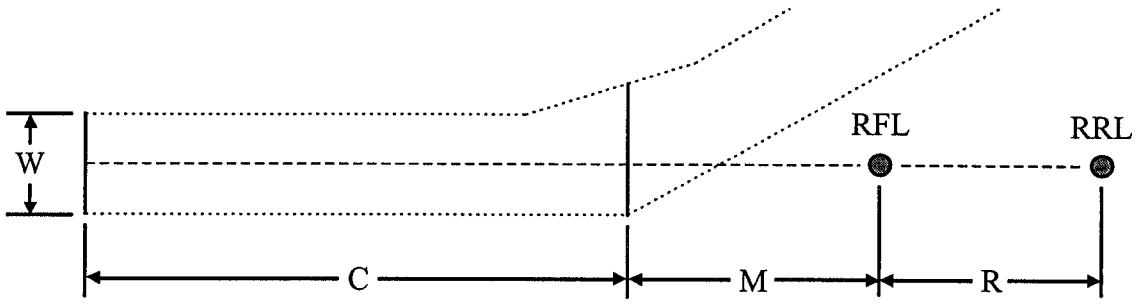

Figure 4-3. Range Diagram.

Problem	Possible Fix	Downside
9. **RRL appears lower than RFL.**	Lower RFL.	Lights/dayboard closer to water.
	Raise RRL.	Extra cost; decreased sensitivities.
	Decrease R.	Decreased sensitivities
10. **RFL below Safe Height Above Water.**	Raise RFL.	May cause blur; raise RRL.
	Use smaller dayboard.	May not be adequate.
11. **RFL Below Horizon.**	Raise RFL.	May cause blur; raise RRL
	Decrease M.	May cause glare; harder to balance illumination ratios.
12, 13. **Obstruction #1, 2 obstructs RFL.**	Raise RFL.	May cause blur; raise RRL
	Remove obstruction.	May not be legal/possible.
	Decrease M.	May cause glare; harder to balance illumination ratios.
14, 15. **Obstruction #1, 2 obstructs RRL.**	Raise RRL.	Decreased sensitivities; extra cost.
	Remove obstruction.	May not be legal/possible.
	Decrease R.	Decreased sensitivities

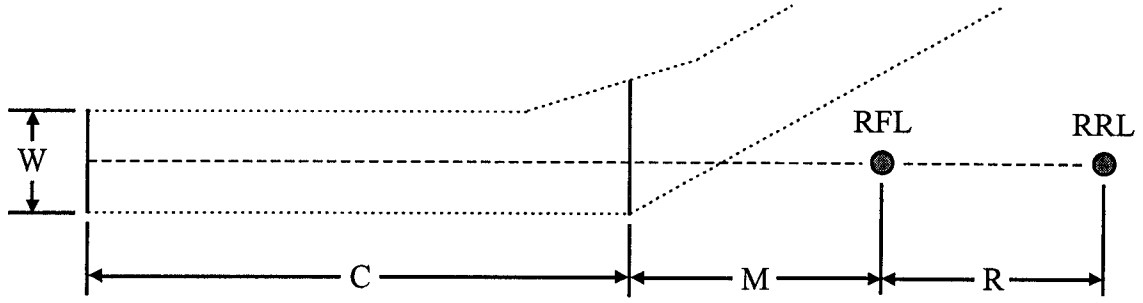

Figure 4-4. Range Diagram.

DAYBOARD PROBLEM CODES:

	Problem	Possible Fix	Downside
1.	**Portion of RFL board below horizon.**	Raise RFL dayboard.	Extra cost.
		Decrease M.	May cause glare; harder to balance illumination ratios.
		Use daytime lights.	Extra initial equipment cost.
2.	**RFL board below Safe Ht Above Water.**	Raise RFL dayboard.	Extra cost.
		Use daytime lights.	Extra initial equipment cost.
3.	**RFL obscures part of RRL board.**	Lower RFL dayboard.	Closer to water, decreased sensitivities.
		Raise RRL dayboard.	Extra cost, decreased sensitivities.
		Use daytime lights.	Extra initial equipment cost.
4.	**RFL obstructs more than 1/2 RRL board.**	Lower RFL dayboard.	Closer to water, decreased sensitivities.
		Raise RRL dayboard.	Extra cost, decreased sensitivities.
		Use daytime lights.	Extra initial equipment cost

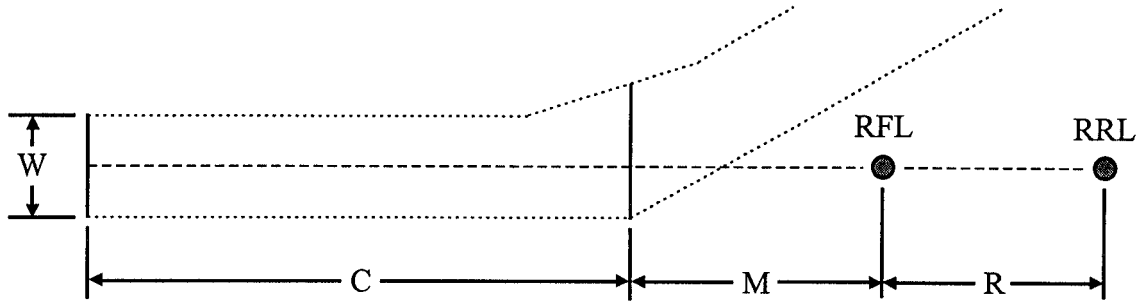

Figure 4-5. Range Diagram.

	Problem	Possible Fix	Downside
5, 7.	**Obstruction #1, 2 obstructs RFL dayboard.**	Raise RFL.	May cause blur; raise RRL ratios.
		Remove obstruction.	May not be legal/possible.
		Decrease M.	May cause glare; harder to balance illumination
6, 8.	**Obstruction #1, 2 obstructs RRL dayboard.**	Raise RRL.	Decreased sensitivities; extra cost.
		Remove obstruction.	May not be legal/possible.
		Decrease R.	Decreased sensitivities.

D. When the Maximum Intensity is less than the Recommended / Minimum Intensity. If you encounter this situation it means the RFL (and maybe the RRL) is too close to the channel and is blinding the vessels. There are two solutions. The first is to move the RFL (and maybe the RRL) back from the channel to increase M. The second is to not move the ranges and chose an intensity that is between the Minimum and Maximum Intensities and live with the glare at the near end of the channel.

E. Range Design is an Art. There is no single correct range design for a given channel. There can be multiple successful combinations of optics, lamps, range structure locations, optic heights, flash characteristics, colors, etc. After creating a few ranges, the designer starts to get a feel for what can and cannot work. It is a trial and error process.

F. Compromise During Range Design. With all the different types of range designs possible for a given channel, there comes a point where the designer must select which range design to use. Some of the selection criteria can be cost of construction, maintenance, cross-track factor, off axis distance, minimized tower heights, power requirements, HOE of primary user, and user input. This is just a partial list, but one can see that much more goes into range design than just the design itself.

CHAPTER 5 - RANGE CONFIGURATIONS & DESIGN CONSTRAINTS

A. Introduction. This chapter establishes configurations and design constraints of ranges. These items must be considered when designing and building the support structures housing the optics to ensure that performance of the aid will be as predicted and that personnel can safely service it. The review and approval process is illustrated in COMDTINST M16500.8A, Automation Technical Guidelines, Figure 1-20 (Project Documentation Approval Process).

B. Tower Placement. Placement of the range towers determines the range centerline. Tower placement along the centerline shall be within 10 feet of the desired position, as shown in Figure 5-1. The lateral error caused by placement of the towers on either side of the true centerline, shall be limited to one foot. See Figure 5-1.

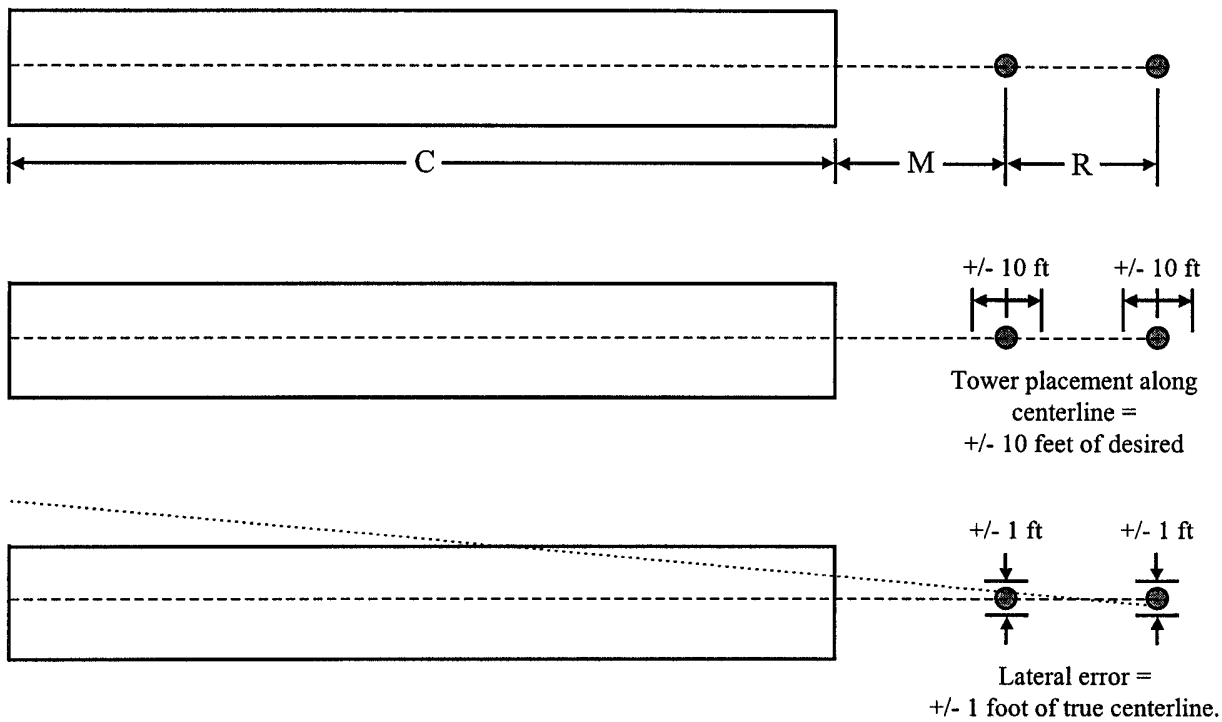

Figure 5-1. Tower Placement.

C. Beacon Placement. Proper beacon placement is necessary to ensure that blur will not occur during nighttime hours, and that each light or group of lights will be viewed as a single source. The heights listed in the range design program are the heights from mean high water to the centerline of the optics. For day & night lighted ranges, the lower optic on the front tower and the upper optic on the rear tower shall be the nighttime lights. Vertical separation shall be 3 feet. The only exception to this is if the front tower has an omnidirectional nighttime light which shall be mounted above the daytime lights. Multiple optics for daytime lights shall be installed on a horizontal plane not to exceed three across. Horizontal separation shall be kept to a minimum to be sure the lights are viewed as a point source. Figure 5-2 details some common configurations of day/night optics

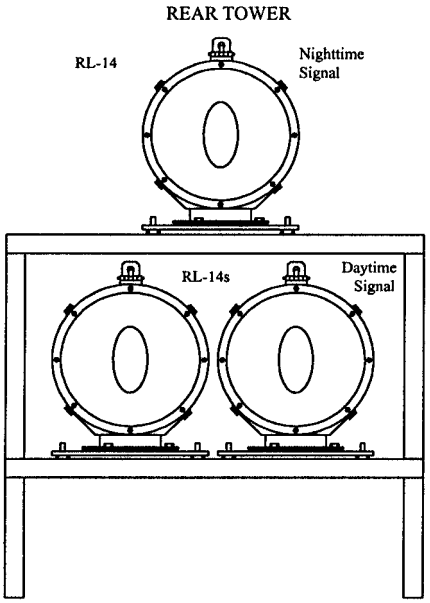

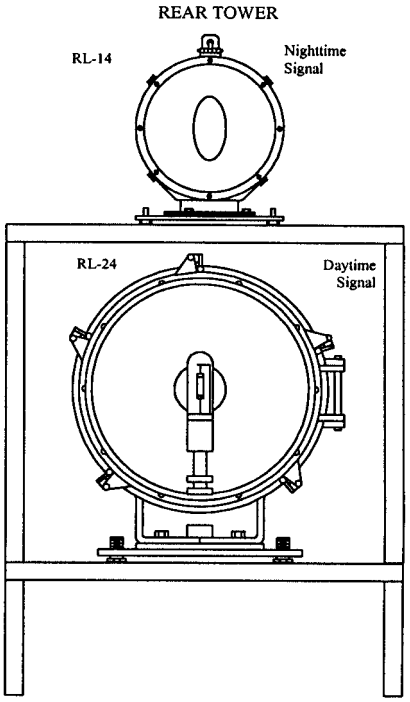

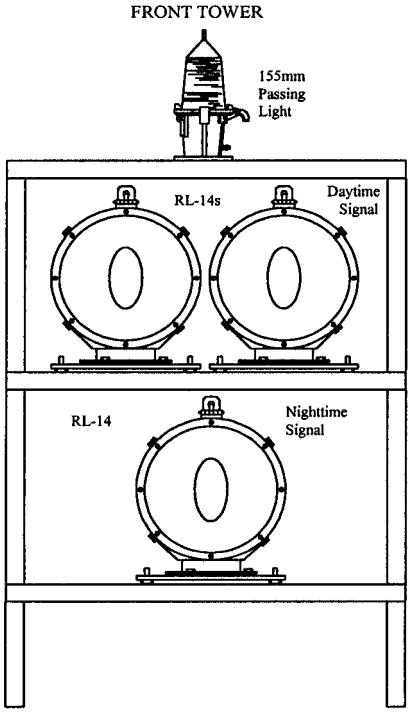

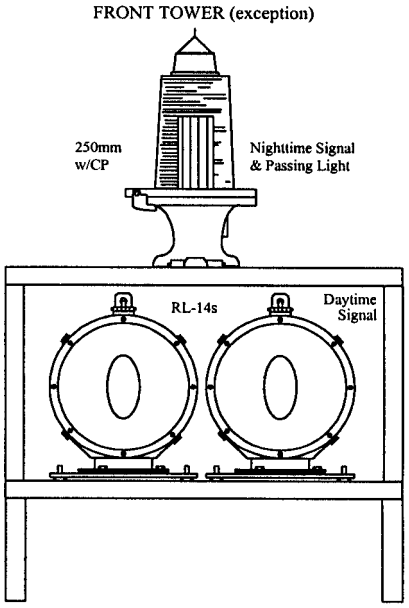

Figure 5-2. Day/Night Range Configurations

D. Additional Lights. If the range design is NOT using omnidirectional optics at night it may be necessary to add additional omnidirectional lights. Additional lights should be mounted where it will not be blocked by the range structure.

1. The standard convention is to mount additional light(s) at a height of 40' or lower to ensure that it will be visible to small boats with a low HOE. As an example, if a lighted range has a RFL height of 25', a RRL height of 80', the additional light for the RFL can be mounted above the RFL range lights (both day and night). However, the additional light should be synchronized with the RFL flash characteristic using a slave flasher. The additional light should also be the same color as the RFL. Power for the additional light should come from the RFL power source.

2. The additional lights for the 80' RRL are actually passing lights and should be mounted lower than the range optic to be seen by a small boater. Since the RRL structure will partially block the passing light, two passing lights will be required. The passing lights should be mounted on opposite corners of the structure. They must be synchronized with each other using a master and slave flasher. It is recommended that power for the two passing lights come from a separate source than that of the RRL optic.

An added benefit to using additional/passing lights is early acquisition of the tower in the near end when piloting out-bound on the range.

E. Servicing Considerations. Range towers shall be designed to ensure that they can be serviced safely. Since most range lights are serviced from the front, at least 2-1/2 feet of deck space is required to safely work on lanterns and solar panels. Additionally, lanterns shall be elevated a minimum of 18 inches off the deck and any lantern installed above 48 inches shall have a work platform built into the structure to allow personnel to stand while servicing. RL-14 lanterns open upwards and require clear space above to allow the door to swing open, as shown in Figure 5-3. RL-24 lanterns have a conventional, side mount hinge. Railings shall be installed, where appropriate, with either careful placement to prevent obstruction of the light or removable safety chains in front of optics. Operation and maintenance guides, if prepared, should be passed to the District who would pass it on to the assigned servicing unit.

F. Construction Details. Boat landings shall be oriented so that boarding can be easily made during prevailing current and wind conditions. Boarding ladders shall have rail extensions to allow easy transition from the deck to the ladder. For range lights in excess of 60 feet from the deck or ground to the servicing platform, the designer should consider utilizing a stairway instead of a ladder. All-weather, hand operated winches, with covers shall be installed on the main deck containing power system equipment and on the lantern deck to facilitate easy handling of hardware. Solar panels shall be installed so that access to both sides of the array are possible and shall not be shadowed by railings, antennas, towers, shelters, etc., within an arc of +/- 90 degrees of the panel's orientation

G. Safety. Installations using large Exide or other lead-acid batteries shall have safety covers on intercell connectors to protect from accidental shorting. Battery rooms should have servicing equipment (hydrometer, tarp for covering solar panel, etc.) and safety equipment (eye wash station, gloves, goggles, etc.) available to servicing personnel in the event they don't bring them.

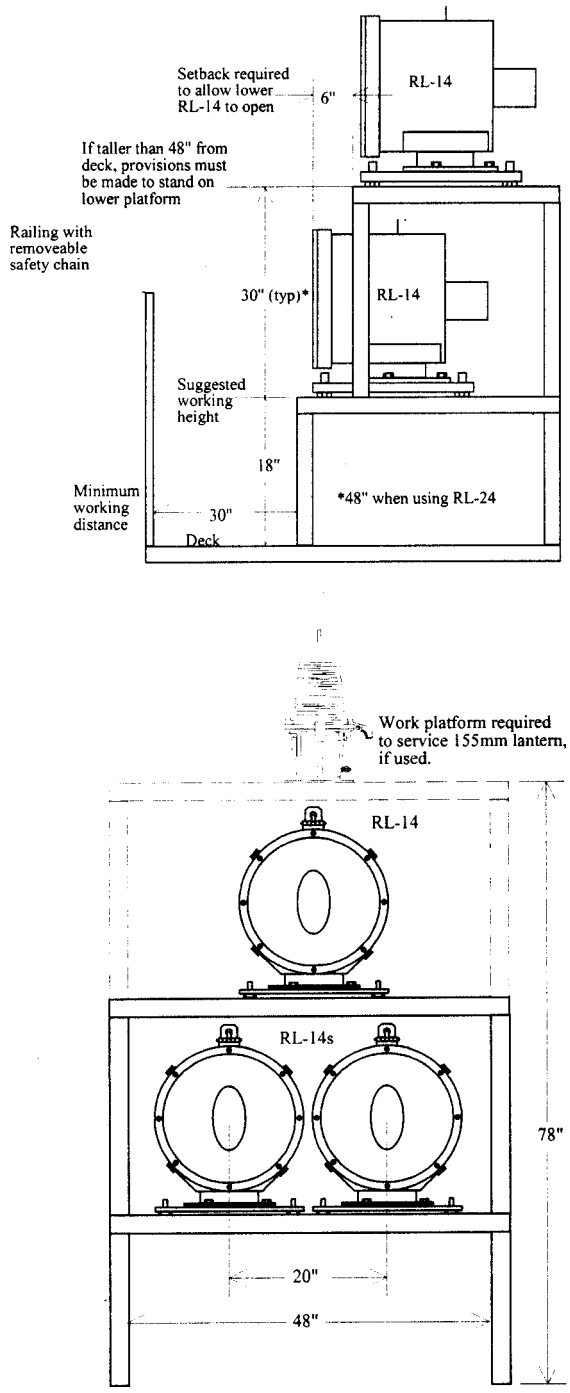

Figure 5-3. Servicing Consideration

H. Dayboards. Dayboard mountings on structures shall be strong enough to secure the dayboard up to the tower's designed wind load and allow servicing personnel easy replacement. However, the dayboard mountings should not exceed the tower strength (dayboard mountings should fail before the structure does). Access to the dayboard by ladder or platform is necessary to remove/replace fasteners. Use of day/night lights is encouraged on ranges requiring 16 and 24 foot dayboards as these are the most hazardous to replace.

RANGE CATEGORY SELECTION AID

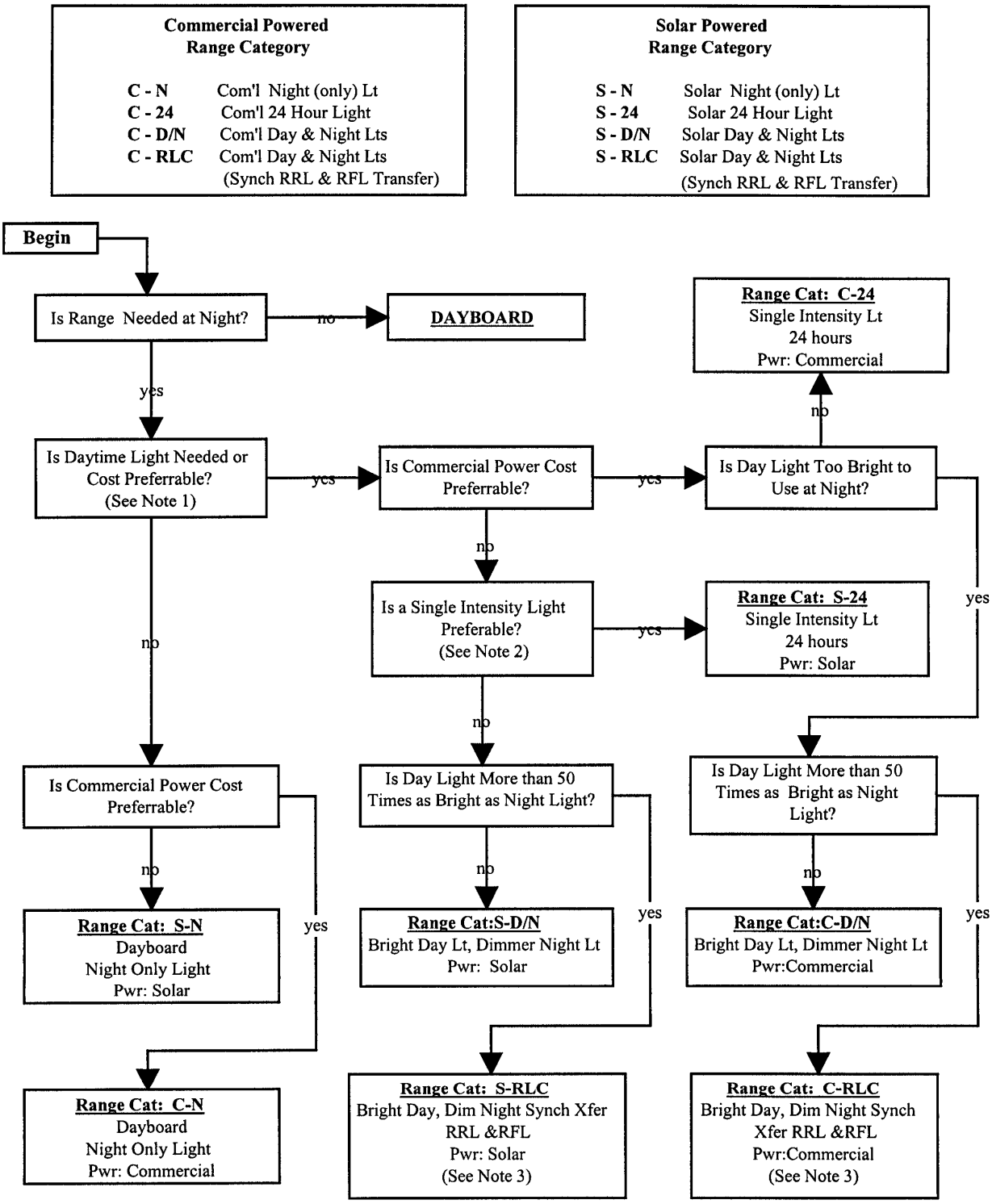

RANGE CATEGORY SELECTION AID NOTES

1. There are factors to consider when deciding whether or not to use daytime lights. Using the Excel Range Design Program, design the range using dayboards, then redesign the range using daytime lights. Compare performance characteristics and associated costs of each approach to make the final judgment.

2. Like most aspects of range design, choosing between a single intensity, 24-hour signal or a dual intensity, day/night signal for solar applications involves tradeoffs:

   a. Factors that favor a single intensity light include:
      Fewer optics (to buy and service).
      No need for day/night control switching.
      Brighter night light usually a superior signal.
      Simpler system.

   b. Factors that favor a brighter day light and a dimmer night light:
      Requires fewer solar panels than brighter 24-hour light.
      Requires less battery capacity than brighter 24-hour light.
      Dimmer night light will tend to lower required height of RRL.

3. The Range Light Controller (RLC) is an EECEN-developed, microprocessor-based device to synchronize switching of front and rear lights from day to night signals simultaneously. Its use is recommended when day and night light intensities differ by 50 times or more, such that the range is not useable in the short period when both front and rear lights are not in the same day or night mode.

Standard Range Equipment Configurations

SOLAR-NIGHT (ONLY) RANGE (Category S-N)

Range Light Signal:
RL-14, 250mm, 300mm
12V lamps, CG-6P, CG-181

Range Light Signal:
RL-14, 250mm, 300mm
12V lamps, CG-6P, CG-181

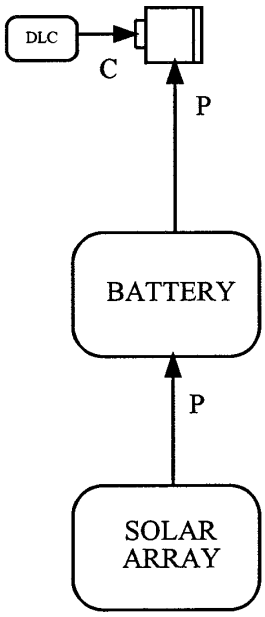

REAR RANGE STRUCTURE

NOTE:

Front and rear signals are independent of each other.
Either may be solar or commercial powered.
Function of the range will remain unchanged.

SYMBOLS:

C = Control
P = Power
DLC = Daylight control (12VDC)

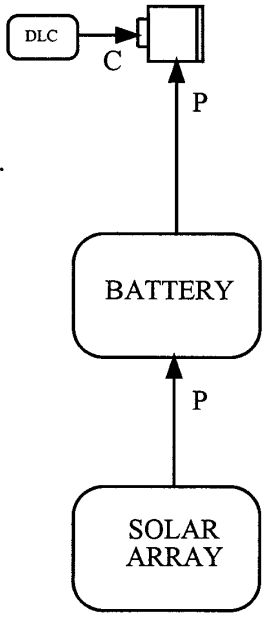

FRONT RANGE STRUCTURE

Standard Range Equipment Configurations

SOLAR-NIGHT (ONLY) RANGE (Category S-N)

Standard Range Equipment Configurations

SOLAR-NIGHT (ONLY) RANGE (Category S-N)

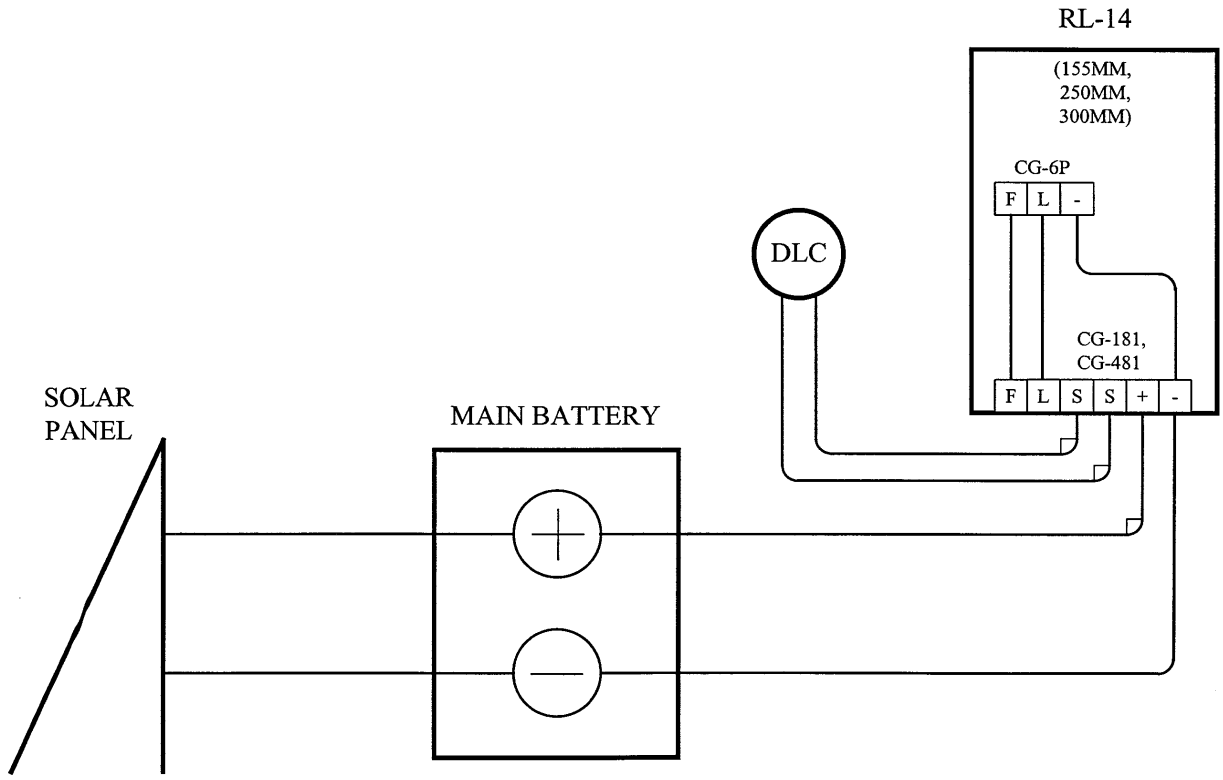

Standard Range Equipment Configurations

SOLAR-24 HOUR RANGE (Category S-24)

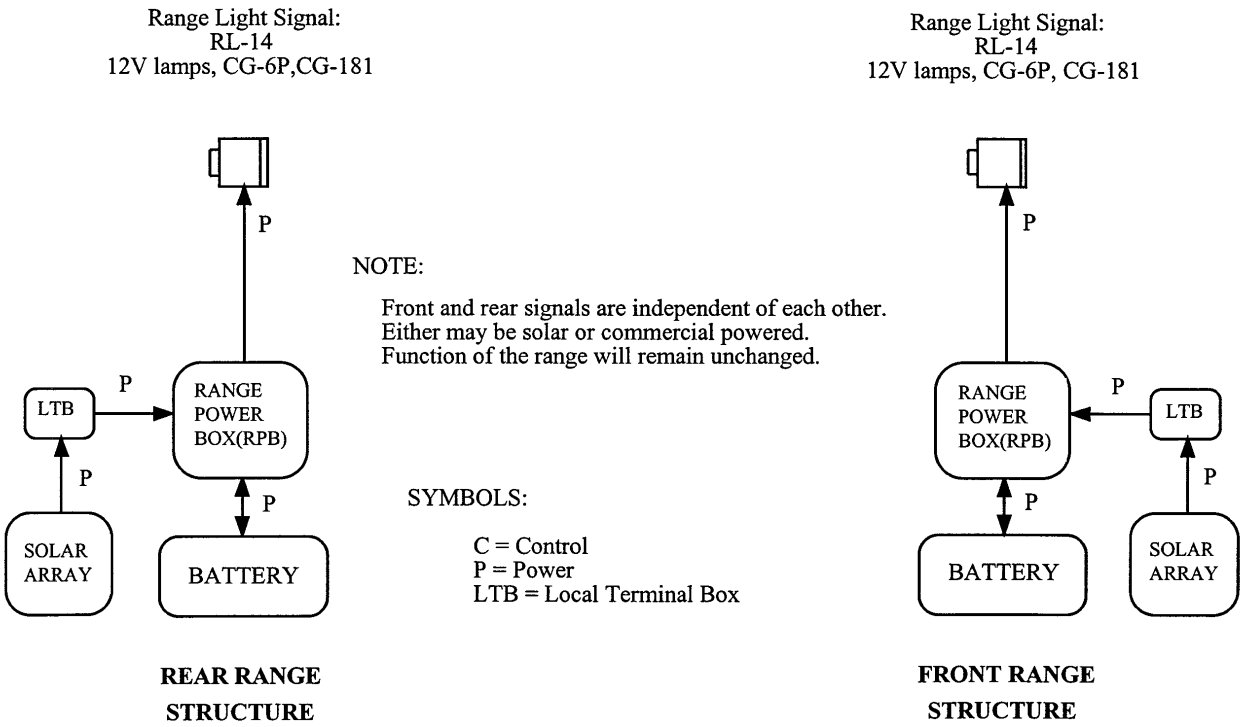

Standard Range Equipment Configurations

SOLAR-24 HOUR RANGE (Category S-24)

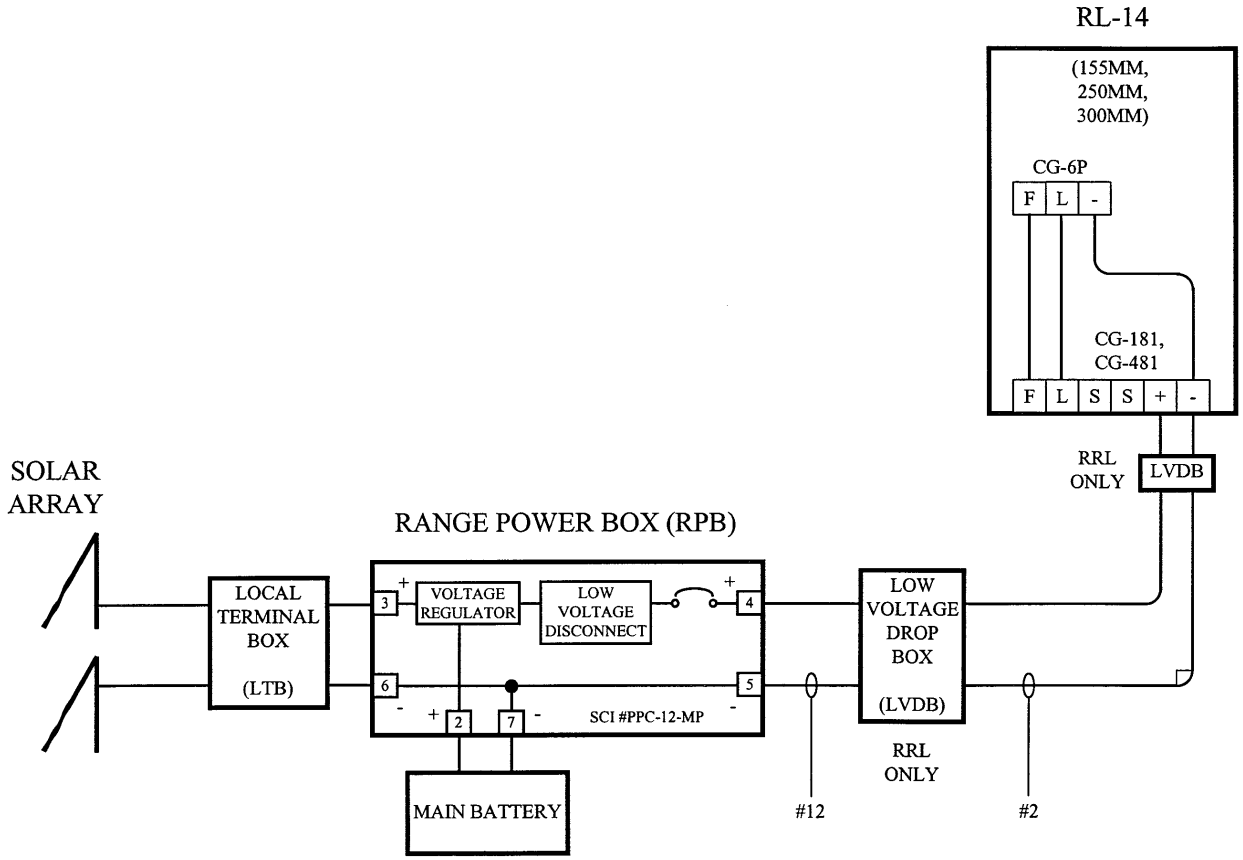

Standard Range Equipment Configurations

SOLAR-DAY/NIGHT RANGE (Category S-D/N)

LOW VOLTAGE DISCONNECT, OPTIONAL MULTIPLE DAYTIME RANGE LANTERNS

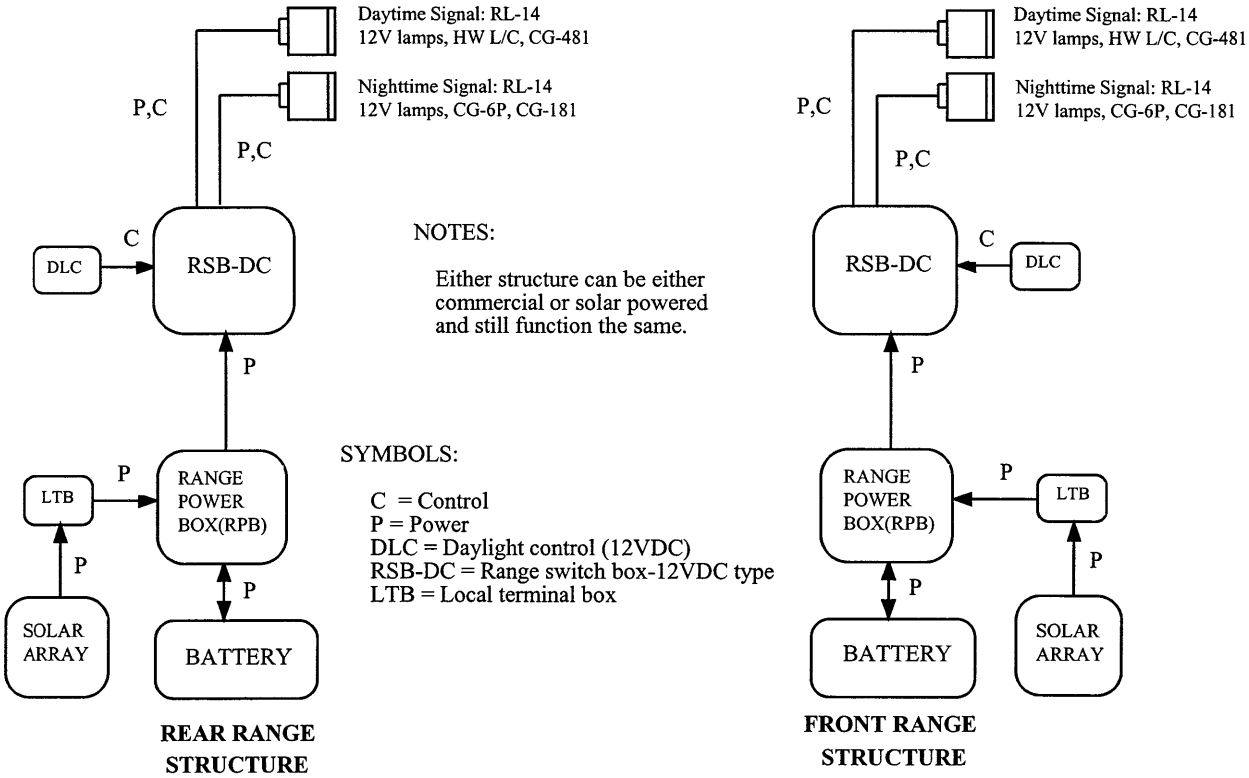

Standard Range Equipment Configurations

SOLAR-DAY/NIGHT RANGE (Category S-D/N)

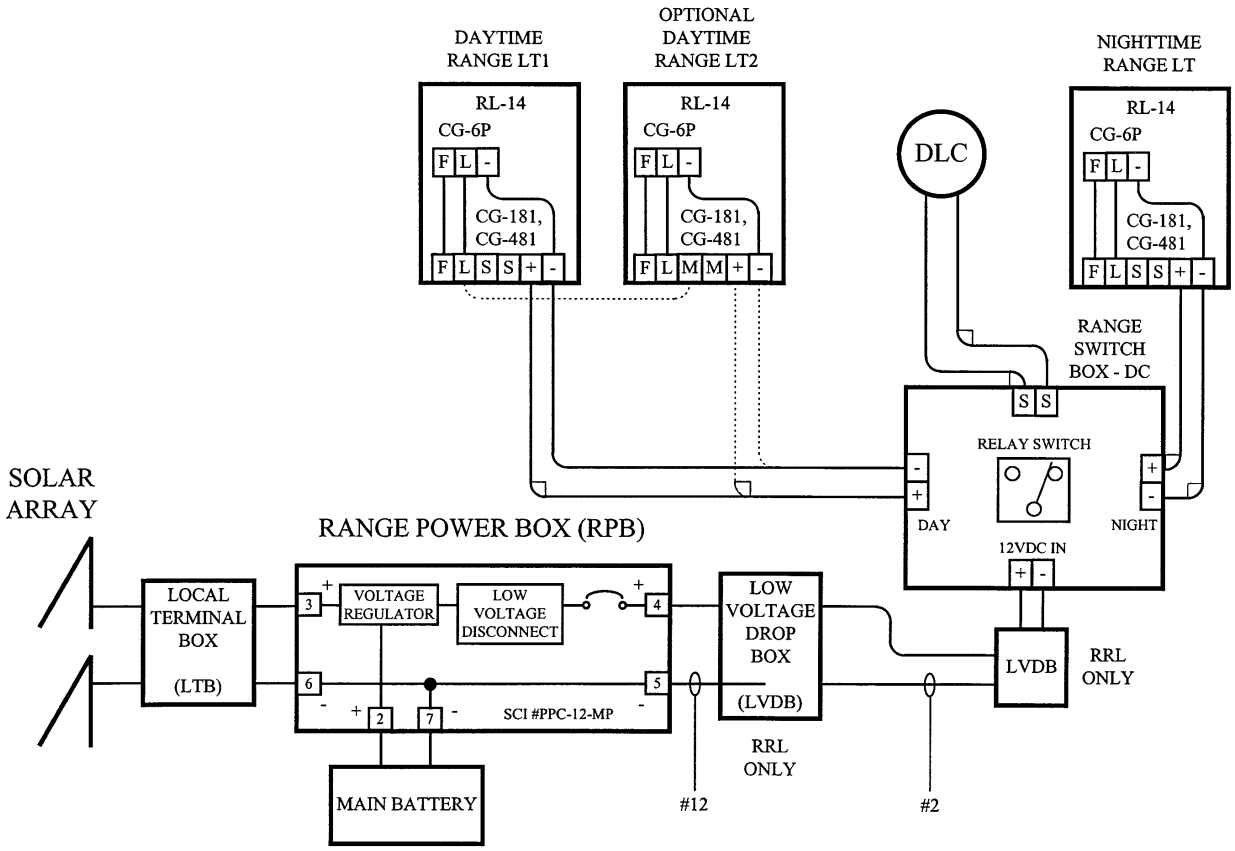

)

Standard Range Equipment Configurations
SOLAR-DAY/NIGHT RANGE-SYNCH TRANSFER (Category S-RLC)

SWITCHING FROM DAY TO NIGHT SIGNALS (& VICE VERSA) SYNCHRONIZED BY RLCs TO OCCUR SIMULTANEOUSLY
LOW VOLTAGE LOAD DISCONNECT, OPTIONAL AUXILIARY BATTERY, OPTIONAL ACMS MONITOR AT EXISTING MASTER UNIT

NOTES:

1. Daytime signal may have as many as three RL-14/110W lamp beacons.
2. Diagram represents the maximum equipment possible.
3. Either structure can be either commercial or solar powered and still function the same.

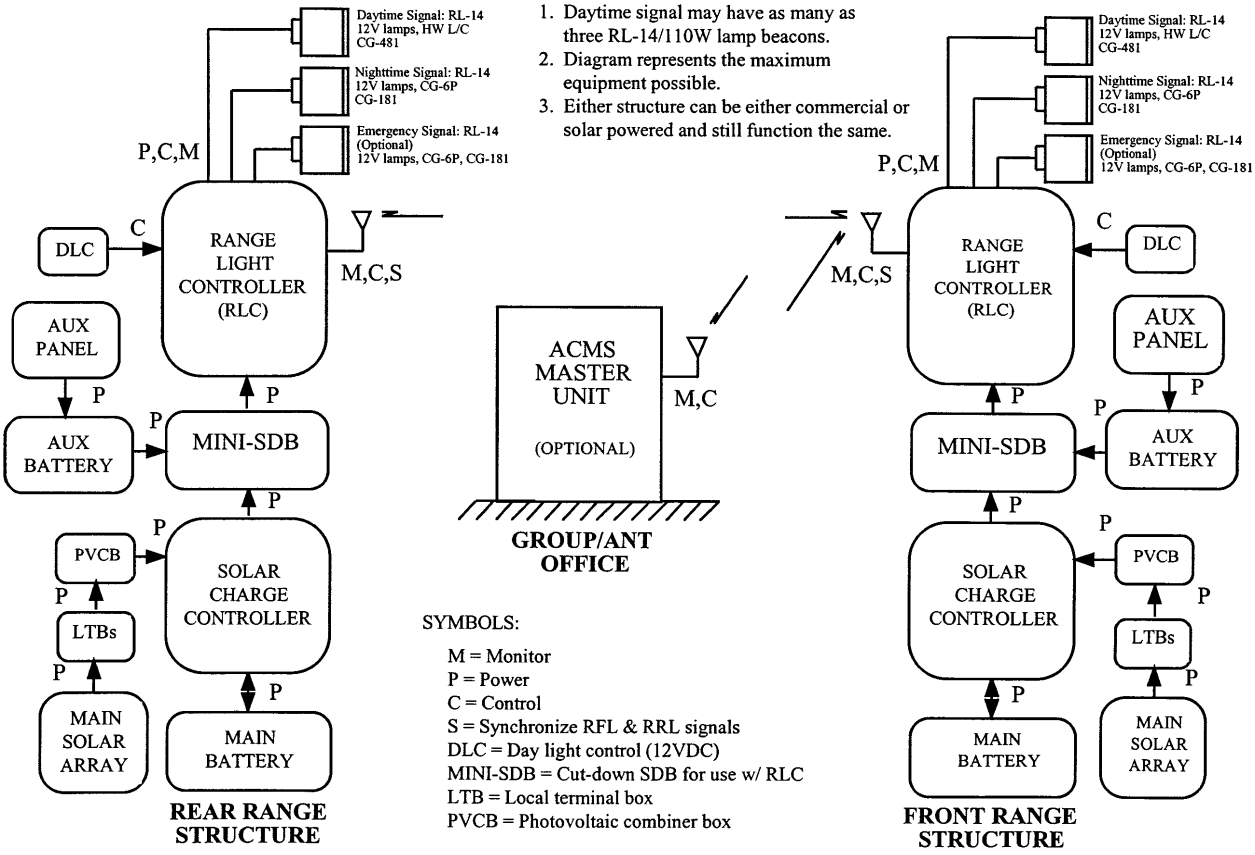

SYMBOLS:

M = Monitor
P = Power
C = Control
S = Synchronize RFL & RRL signals
DLC = Day light control (12VDC)
MINI-SDB = Cut-down SDB for use w/ RLC
LTB = Local terminal box
PVCB = Photovoltaic combiner box

Standard Range Equipment Configurations

SOLAR-DAY/NIGHT RANGE-SYNCH TRANSFER (Category S-RLC)

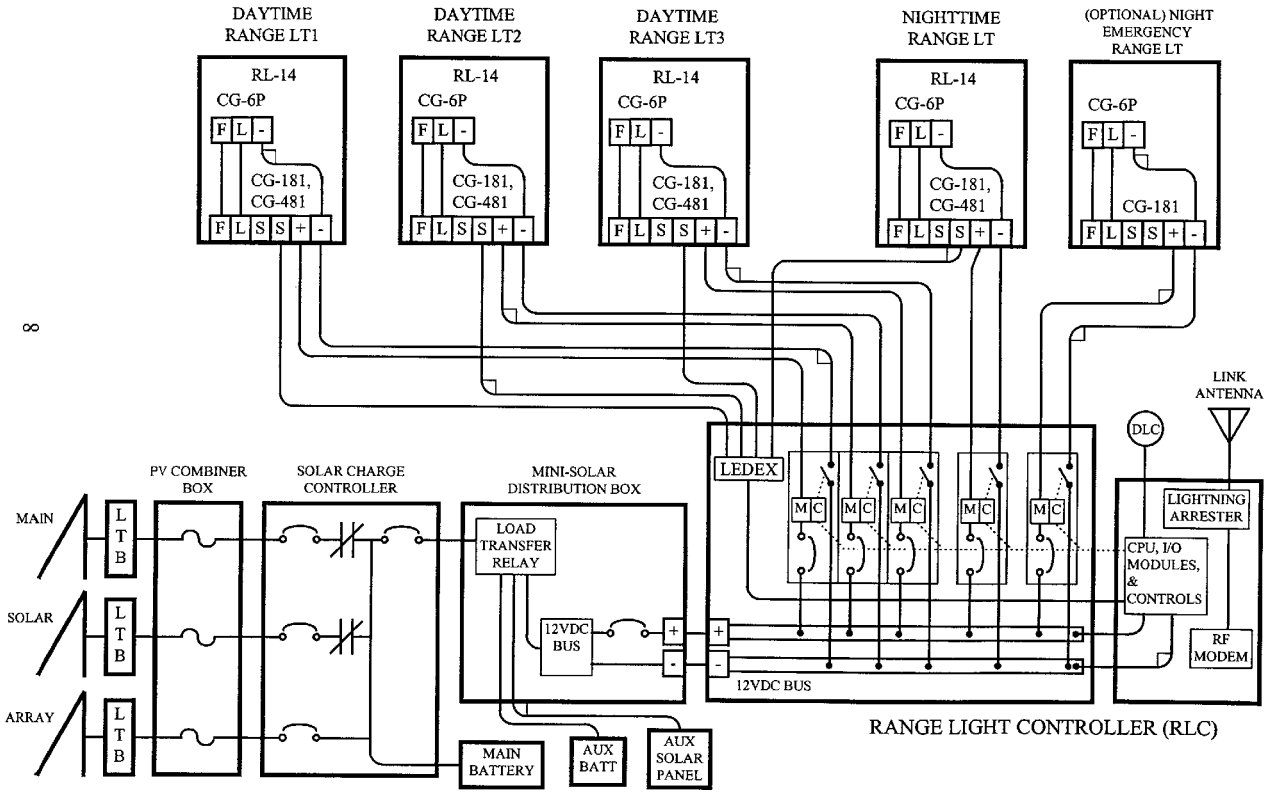

Standard Range Equipment Configurations

COMMERCIAL-NIGHT (ONLY) RANGE (Category C-N)

OPTIONAL EMERGENCY LIGHT

Range Light Signal:
RL-14, RL-24
120V lamps & L/C or
12V signals w/
A/N power supply

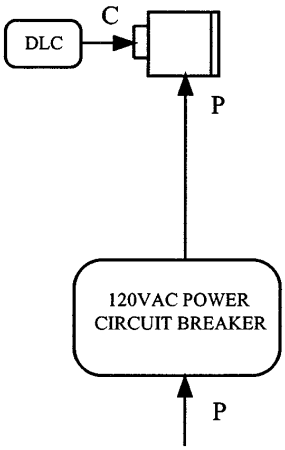

REAR RANGE STRUCTURE

NOTE:

Front and rear signals are independent of each other.
Either may be solar or commercial powered.
Function of the range will remain unchanged.

SYMBOLS:

C = Control
P = Power
DLC = Daylight control

Range Light Signal:
RL-14, RL-24
120V lamps & L/C or
12V signals w/
A/N power supply

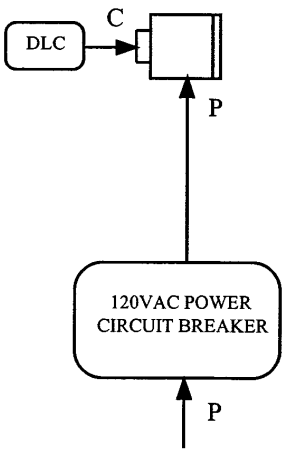

FRONT RANGE STRUCTURE

Standard Range Equipment Configurations

COMMERCIAL-NIGHT (ONLY) RANGE (Category C-N)

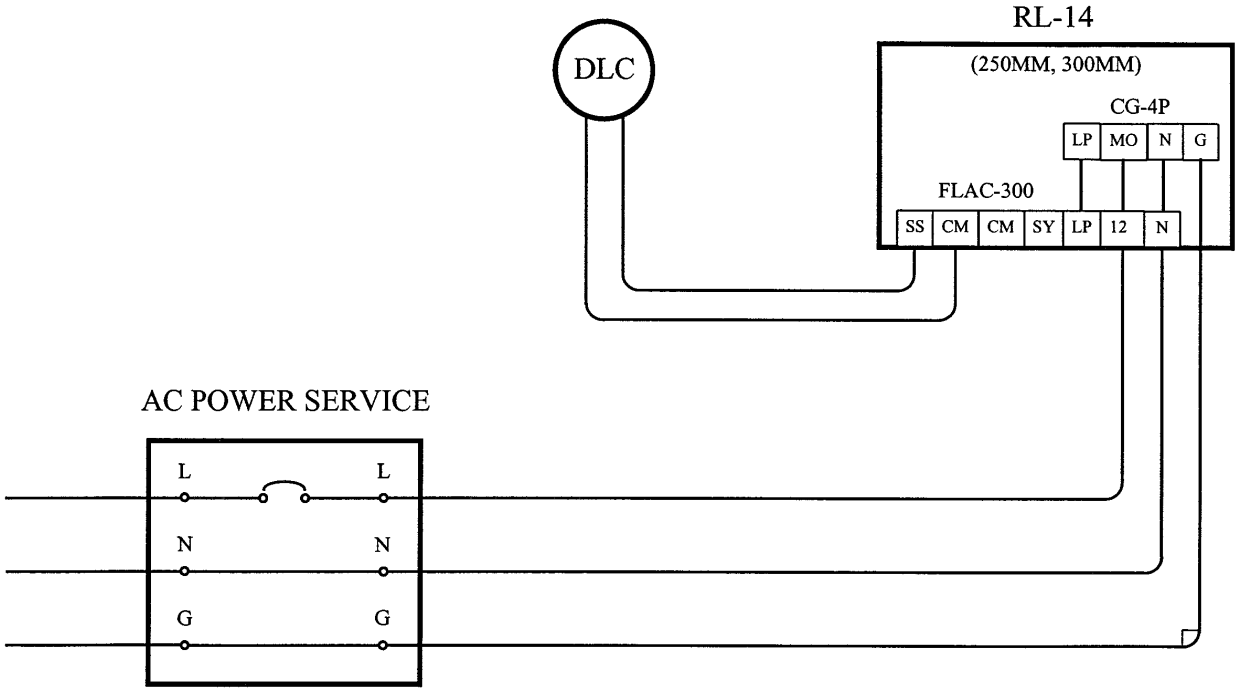

Standard Range Equipment Configurations

COMMERCIAL-24 HOUR RANGE (Category C-24)

Standard Range Equipment Configurations

COMMERCIAL-24 HOUR RANGE (Category C-24)

OPTIONAL EMERGENCY LIGHT, ADD ACFC IF 1000W FLASHED; OPTIONAL RL14-150/250W LAMP, FLAC 300, 120VAC

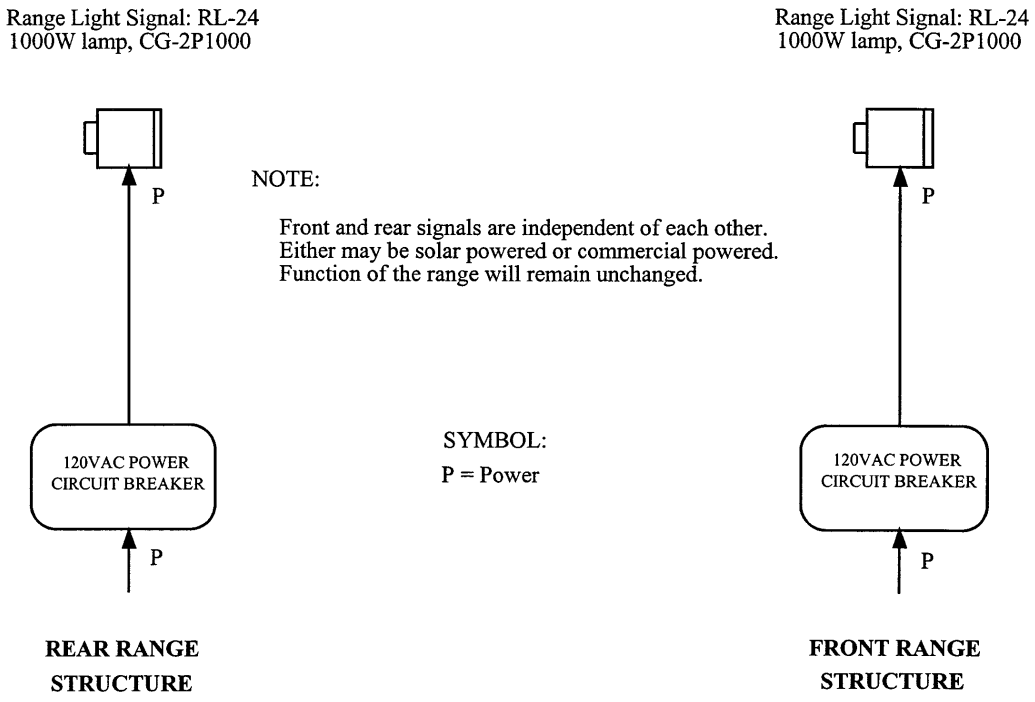

Standard Range Equipment Configurations

COMMERCIAL-24 HOUR RANGE (Category C-24)

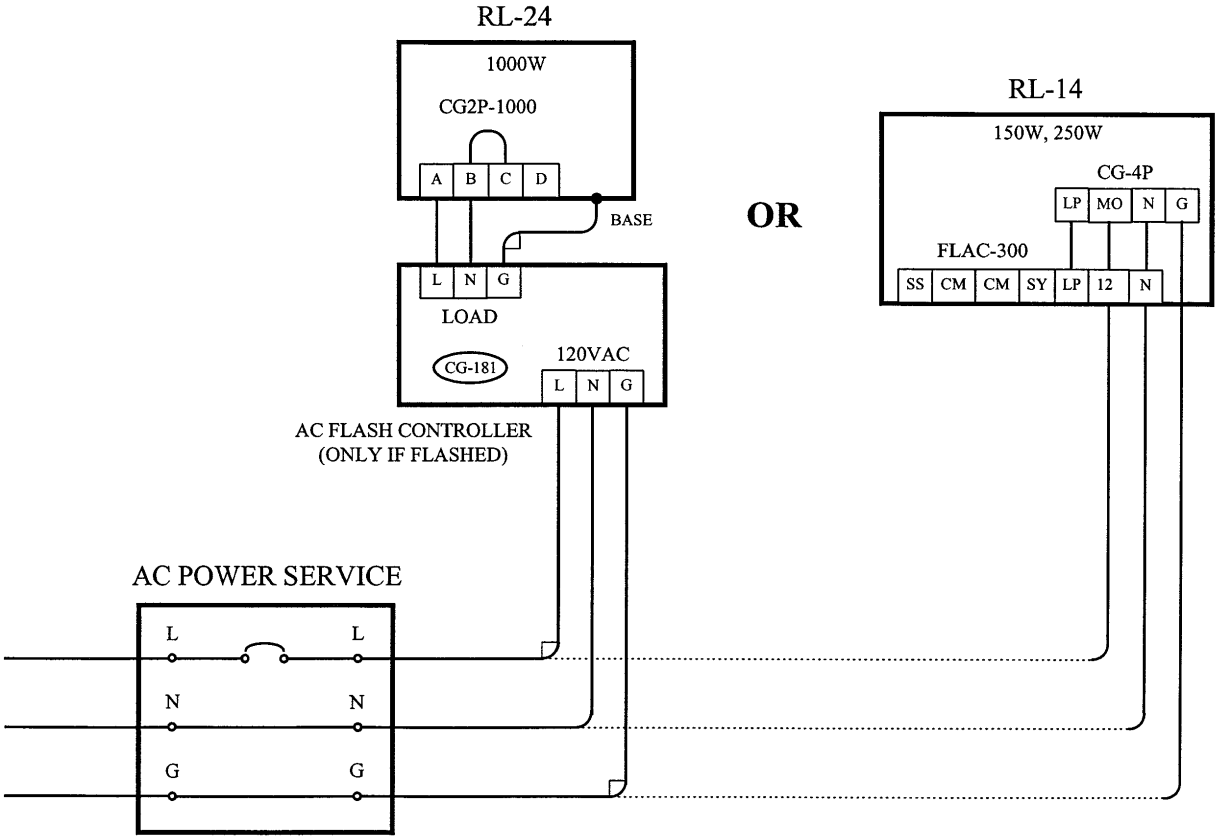

Standard Range Equipment Configurations

COMMERCIAL-DAY/NIGHT RANGE (Category C-D/N)

OPTIONAL EMERGENCY LIGHT. ADD ACFC IF 1000W FLASHED. OPTIONAL MULTIPLE DAYTIME RANGE LANTERNS

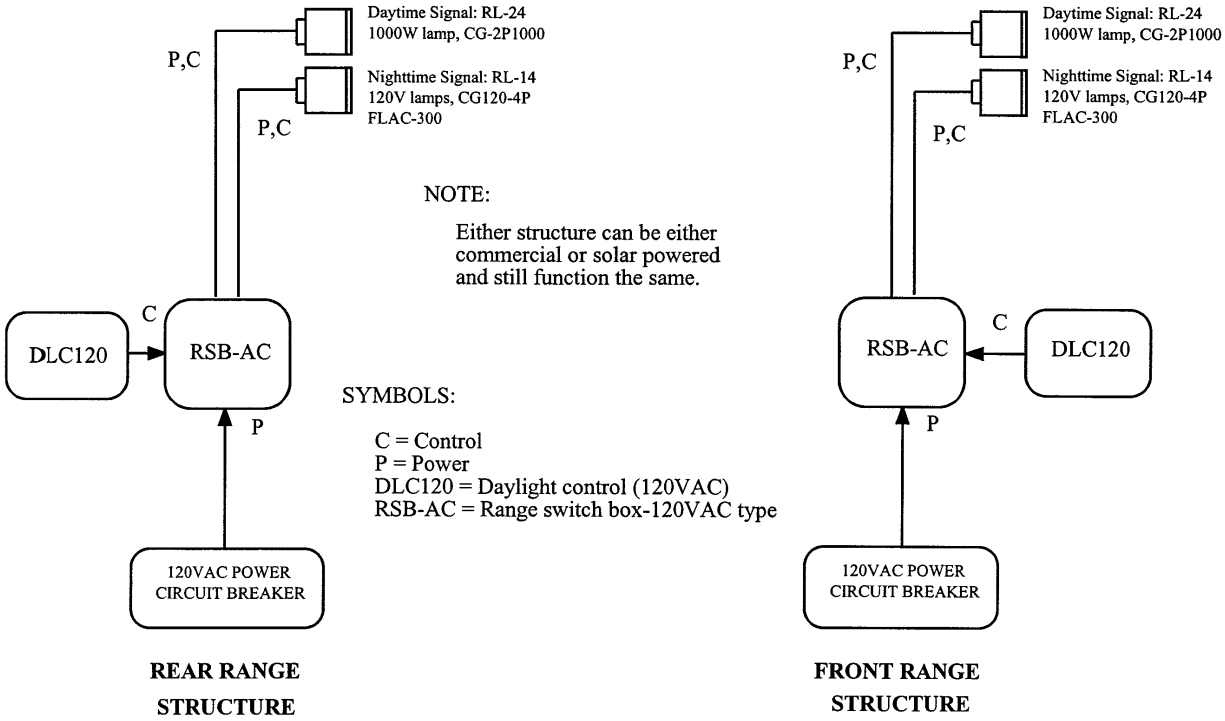

REAR RANGE STRUCTURE

FRONT RANGE STRUCTURE

Standard Range Equipment Configurations

COMMERCIAL-DAY/NIGHT RANGE (Category C-D/N)

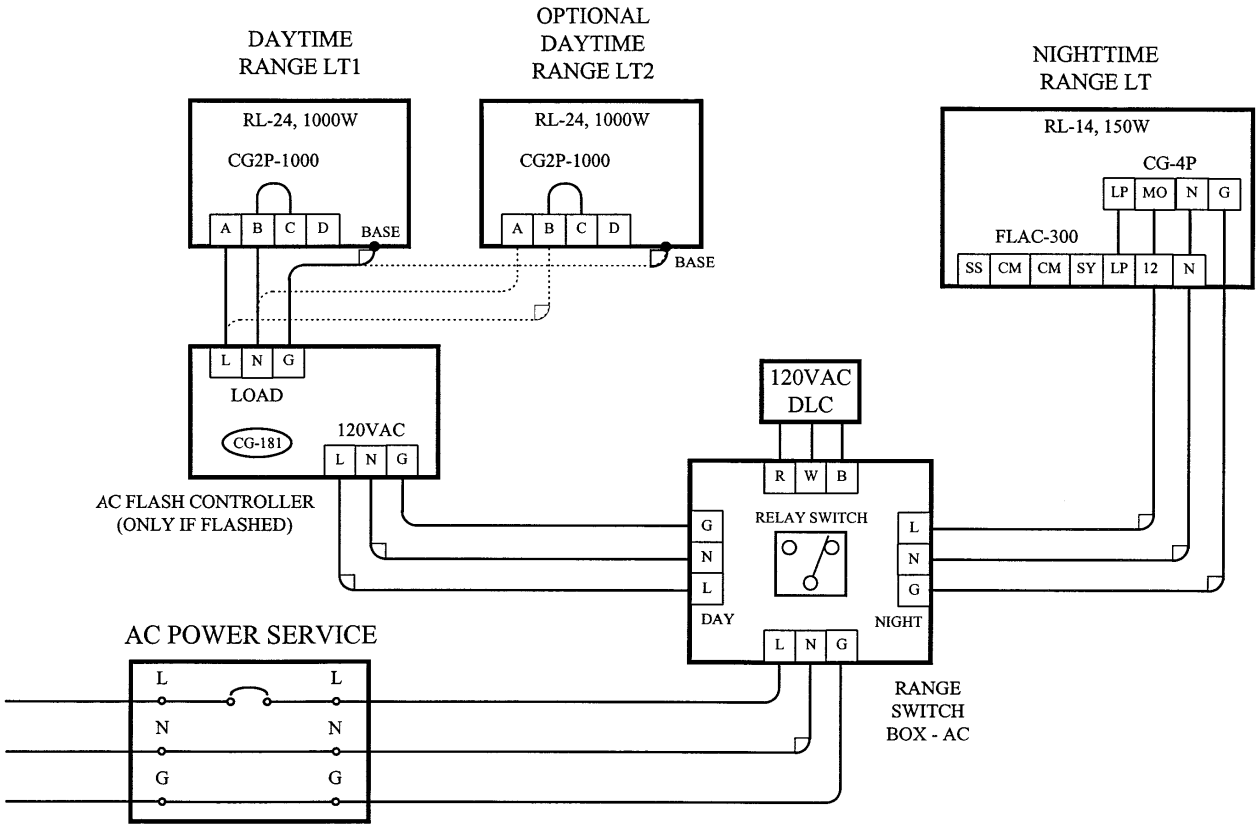

Standard Range Equipment Configurations

COMMERCIAL-DAY/NIGHT RANGE-SYNCH TRANSFER (Category C-RLC)

SWITCHING FROM DAY TO NIGHT SIGNALS (& VICE VERSA) SYNCHRONIZED BY RLCs TO OCCUR SIMULTANEOUSLY
120VAC POWERED, WITH EMERGENCY SIGNALS AND OPTIONAL ACMS MONITOR AT EXISTING MASTER UNIT

NOTES:

1. Daytime signal may have as many as four RL-24/1000W lamp beacons.
2. Diagram represents the maximum equipment possible.
3. Either structure can be either commercial or solar powered and still function the same.

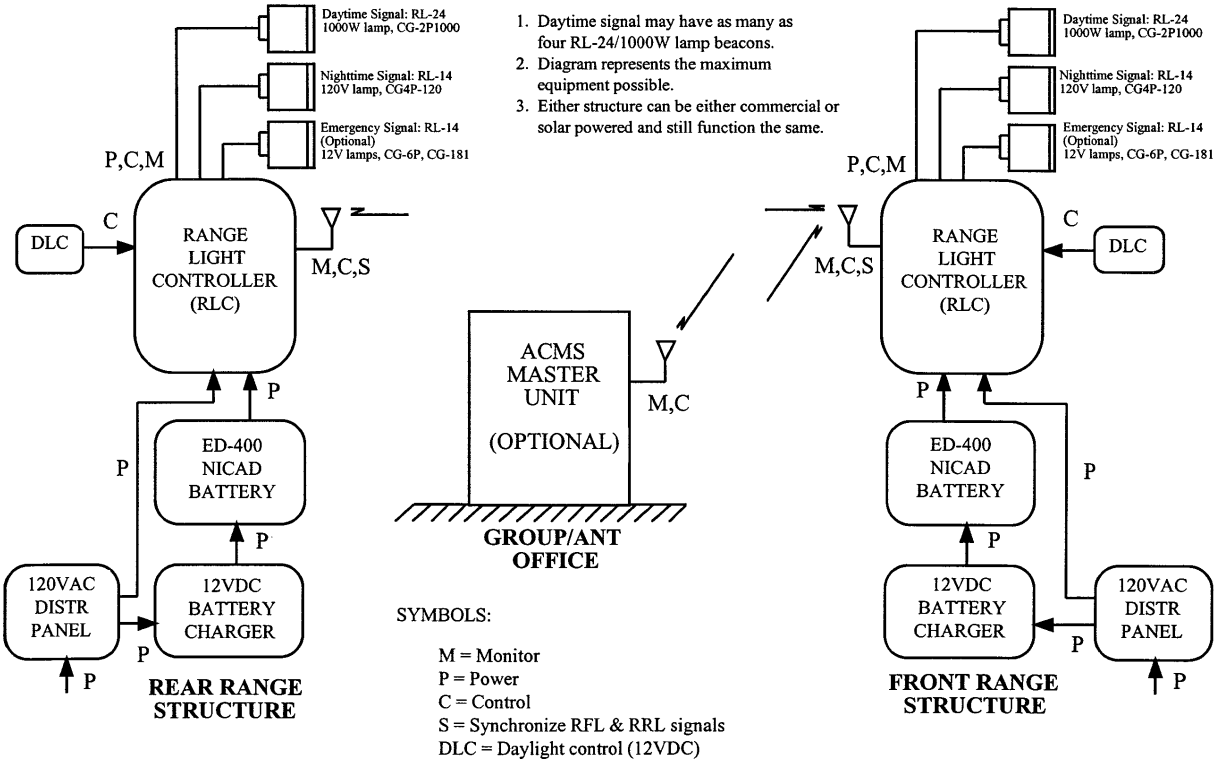

SYMBOLS:

M = Monitor
P = Power
C = Control
S = Synchronize RFL & RRL signals
DLC = Daylight control (12VDC)

Standard Range Equipment Configurations

COMMERCIAL-DAY/NIGHT RANGE-SYNCH TRANSFER (Category C-RLC)

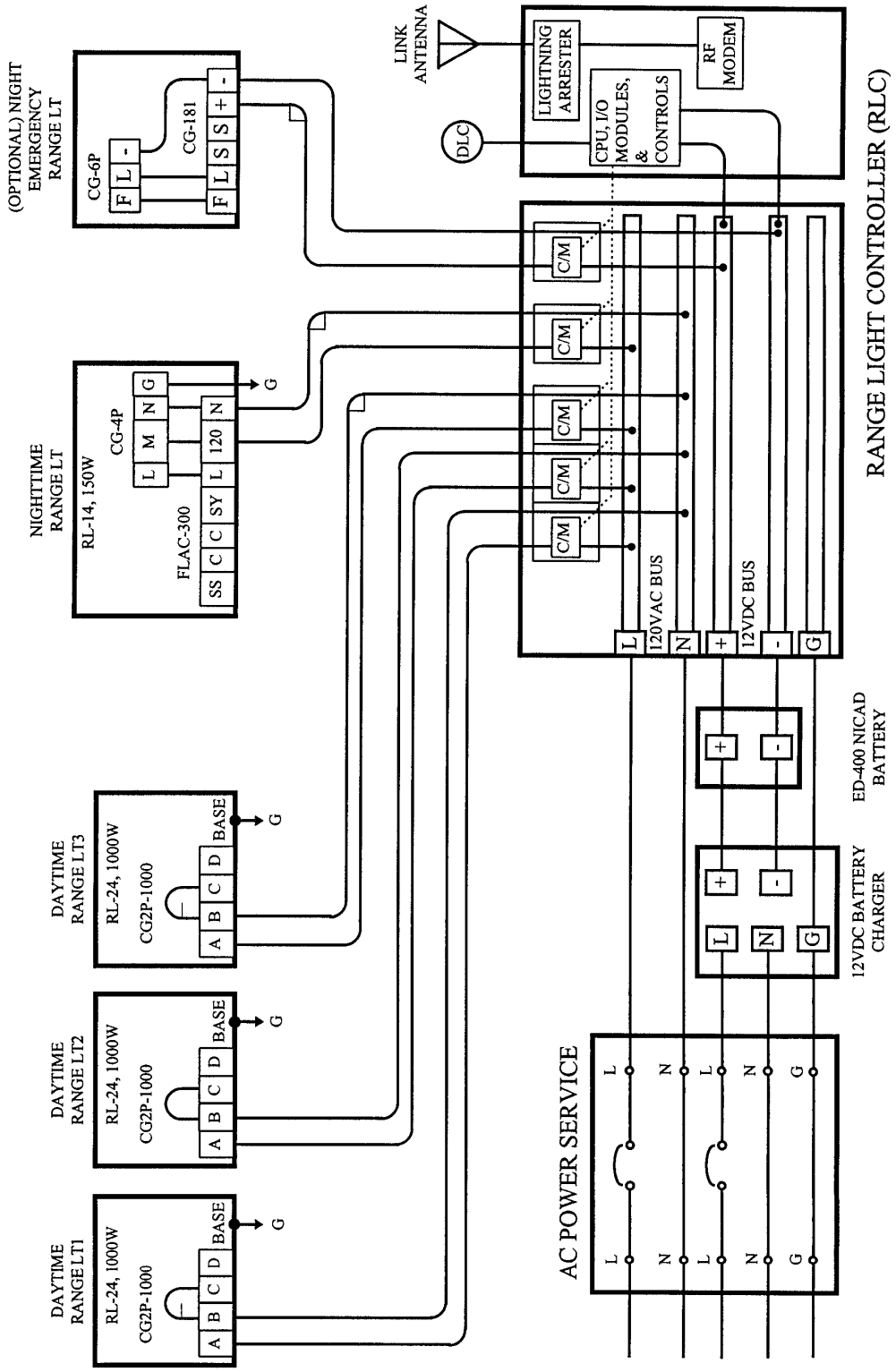

Standard Range Equipment Configurations

OPTIONAL EMERGENCY RANGE

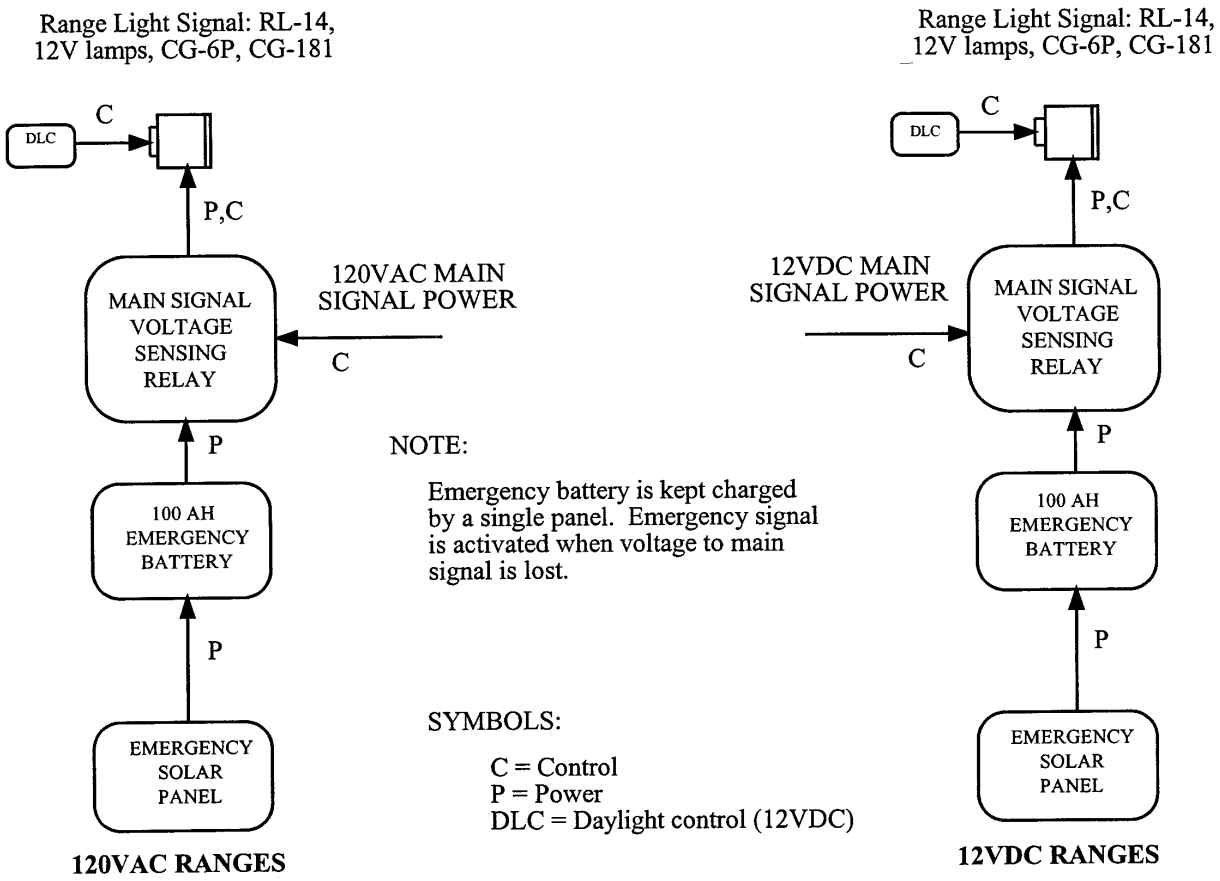

Standard Range Equipment Configurations

OPTIONAL EMERGENCY RANGE

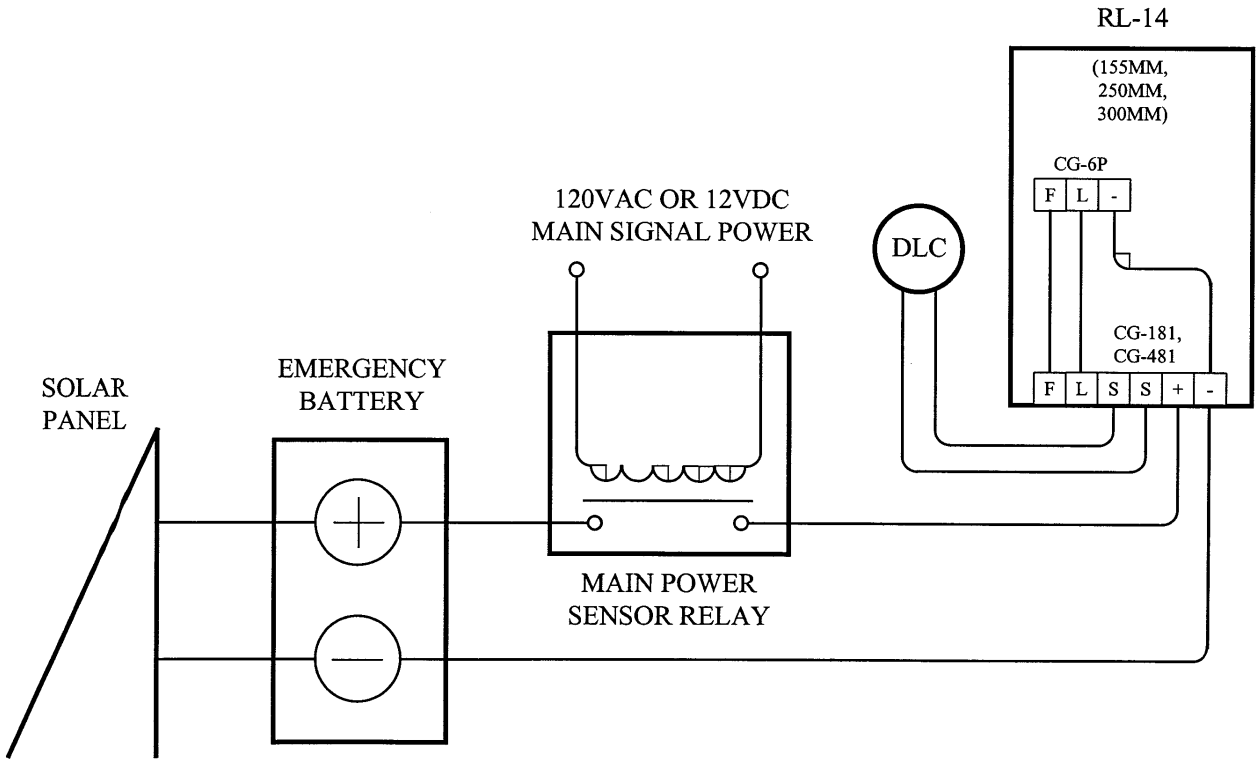

Visibility Data Tables

ALASKA

LAT (°)	LONG (°)	90% VIS (nm)
51	172	3.1*
51	173	3.2*
51	174	3.3*
52	167	1.4
52	168	1.5
52	169	1.3
52	170	3.7*
52	171	2.7*
52	172	1.8
52	173	2.6
52	174	2.4
53	165	2.1
53	166	2.7
53	167	2.8
53	168	3.0
53	169	2.2
54	131	2.4
54	132	2.5
54	133	2.5
54	161	2.2
54	162	2.3
54	163	1.7
54	164	1.5
54	165	1.9
54	166	2.1
54	167	1.9
55	129	3.3
55	130	3.3
55	131	3.3
55	132	3.1
55	133	2.9
55	158	3.8
55	159	3.5
55	160	3.6
55	161	3.8
55	162	1.0
55	163	3.3*

LAT (°)	LONG (°)	90% VIS (nm)
55	164	1.4
56	131	4.1
56	132	4.1
56	133	3.8
56	134	3.6
56	135	3.3
56	152	3.3
56	153	3.3
56	154	2.8
56	155	3.2
56	156	3.8
56	157	4.2
56	158	2.4
56	159	2.4
56	160	3.5*
56	161	2.5*
56	162	3.5*
57	132	1.9
57	133	1.9
57	134	4.4
57	135	3.5
57	136	3.7
57	152	3.3
57	153	4.3
57	154	5.7
57	155	4.9
57	156	2.7
57	157	1.5
57	158	1.5
58	133	1.0
58	134	1.0
58	135	4.8
58	136	3.6
58	137	3.7
58	138	3.7
58	151	4.1
58	152	3.5

* Note: 80% visibility values are given. 90% visibility values are not available for these sites.

◆ Note: Round the LAT and LONG down to a whole degree.

Visibility Data Tables

ALASKA

LAT (°)	LONG (°)	90% VIS (nm)
58	153	5.1
58	154	5.1
58	156	4.6
58	157	4.6
58	158	4.6
58	159	3.4*
58	160	3.4*
58	161	1.2*
58	162	2.5
58	163	1.0*
59	136	3.6
59	137	3.7
59	138	4.1
59	139	4.1
59	140	4.5
59	141	3.6
59	142	3.7
59	143	4.1
59	144	4.0
59	145	4.0
59	146	4.3
59	147	3.8
59	148	4.1
59	149	4.5
59	150	3.6
59	151	4.0
59	152	5.2
59	153	4.9
59	154	4.9
59	156	4.6
59	158	4.6
59	160	3.4*
59	161	1.2*
59	162	2.5
59	163	2.3*
59	164	2.3*
59	165	1.8*

LAT (°)	LONG (°)	90% VIS (nm)
59	166	1.8
59	167	2.0*
59	168	1.6**
60	141	3.6
60	142	3.7
60	143	4.1
60	144	2.5*
60	145	3.2
60	146	3.6
60	147	3.7
60	161	1.2*
60	162	2.5
61	146	3.6
61	147	3.7
61	148	1.7
61	149	1.4
61	150	8.1
61	152	5.9
61	164	3.8*
61	167	1.3
61	168	1.7*
62	166	3.1
62	167	2.4
63	163	6.7
64	164	5.9
64	167	3.6*
64	168	2.8*
65	166	3.8
65	167	2.0
65	168	2.7*
66	166	4.7
66	167	3.0
66	168	3.7*
67	164	4.5
68	166	3.4
68	167	4.6*
69	163	3.3
69	167	1.6

* Note: 80% visibility values are given. 90% visibility values are not available for these sites.

** Note: 75% visibility value is given. Larger visibility values are not available for this site.

◆ Note: Round the LAT and LONG down to a whole degree.

Visibility Data Tables

HAWAII

LAT (°)	LONG (°)	90% VIS (nm)
18	154	8.7
18	155	8.6
18	156	8.8
18	157	8.9
18	158	8.4
18	159	8.1
18	160	8.3
19	154	7.2
19	155	6.9
19	156	8.1
19	157	8.2
19	158	8.4
19	159	8.0
19	160	8.5
20	154	7.9
20	155	8.3
20	156	8.9
20	157	8.8
20	158	8.9
20	159	9.9
20	160	9.4
21	154	9.2
21	155	9.3
21	156	9.5
21	157	8.2
21	158	9.2
21	159	9.6
21	160	9.3
22	154	9.8
22	155	10.4
22	156	9.2
22	157	9.2
22	158	9.2
22	159	9.0
22	160	9.2

- Note: Round the LAT and LONG down to a whole degree.

Visibility Data Tables

WEST COAST

LAT (°)	LONG (°)	90% VIS (nm)
32	116	5.2
33	117	3.6
33	118	4.8
33	119	5.5
33	120	6.0
34	118	1.8
34	119	2.1
34	120	4.2
34	121	5.3
35	120	3.8
35	121	4.8
35	122	4.7
36	121	4.2
36	122	4.4
37	122	2.7
37	123	3.2
38	122	2.6
38	123	2.9
38	124	4.2
39	123	3.3
39	124	3.5
40	124	2.8
40	125	4.5
41	124	3.4

LAT (°)	LONG (°)	90% VIS (nm)
41	125	4.4
42	124	3.2
42	125	3.9
43	124	3.3
43	125	4.5
44	123	4.2
44	124	4.2
44	125	4.6
45	123	4.5
45	124	4.9
45	125	5.1
46	123	4.2
46	124	4.5
46	125	4.9
47	122	2.4
47	123	4.3
47	124	4.4
47	125	4.2
48	122	3.8
48	123	4.9*
48	124	3.5
48	125	2.6
49	122	3.8*
49	124	3.7*
49	125	2.1

* Note: 80% visibility values are given. 90% visibility values are not available for these sites.

◆ Note: Round the LAT and LONG down to a whole degree.

Visibility Data Tables

GREAT LAKES

LAT (°)	LONG (°)	90% VIS (nm)
41	80	2.6
41	81	4.0
41	82	4.3
41	83	3.1
41	86	4.3
41	87	4.3
42	79	3.5
42	80	2.9
42	81	3.6
42	82	2.3
42	83	3.2
42	86	3.1
42	87	3.6
43	76	3.2
43	77	2.9
43	78	2.5
43	79	2.4
43	81	3.1
43	82	3.8
43	83	3.5
43	86	3.1
43	87	3.2
44	80	2.7
44	81	2.0
44	82	3.3
44	83	4.1
44	86	3.2
44	87	3.6
45	80	2.5

LAT (°)	LONG (°)	90% VIS (nm)
45	81	2.2
45	82	2.6
45	83	4.4
45	84	3.0
45	86	4.0
45	87	4.1
46	81	2.6
46	82	3.1
46	83	2.6
46	84	3.0
46	85	3.3
46	86	3.9
46	87	2.2
46	88	3.3
46	89	3.6
46	90	4.5
46	91	4.2
47	84	1.7
47	85	1.7
47	86	1.2
47	87	2.2
47	88	3.3
47	89	3.6
47	90	4.5
47	91	3.7
48	85	1.4
48	86	1.4
48	87	1.4
48	88	3.4
48	89	3.9

- Note: Round the LAT and LONG down to a whole degree.

Visibility Data Tables

EAST COAST NORTH OF FLORIDA

LAT (°)	LONG (°)	90% VIS (nm)
31	80	7.4
31	81	7.7
32	79	6.8
32	80	6.5
32	81	6.5
33	77	7.3
33	78	6.8
33	79	6.8
34	75	7.3
34	76	6.1
34	77	4.9
35	75	5.8
35	76	5.8
35	77	5.8
36	75	5.1
36	76	4.5
37	74	5.3
37	75	4.7
37	76	3.9
37	77	3.4
38	74	4.3
38	75	4.0
38	76	4.4
38	77	4.4

LAT (°)	LONG (°)	90% VIS (nm)
39	73	4.0
39	74	3.9
39	75	3.6
39	76	3.2
40	71	3.0
40	72	3.5
40	73	3.1
40	74	2.4
40	75	3.6
41	69	4.2*
41	70	2.6
41	71	1.9
41	72	2.4
41	73	1.4
42	69	2.5
42	70	3.3
42	71	2.2
43	67	1.7*
43	68	1.3
43	69	2.4
43	70	2.5
44	66	3.3*
44	67	2.3*
44	68	1.8**
44	69	3.7*

* Note: 80% visibility values are given. 90% visibility values are not available for these sites.

** Note: 75% visibility value is given. Larger visibility values are not available for this site.

◆ Note: Round the LAT and LONG down to a whole degree.

Visibility Data Tables

FLORIDA AND GULF COAST

LAT (°)	LONG (°)	90% VIS (nm)
24	79	9.3
24	80	9.1
24	81	9.8
24	82	9.8
25	79	9.8
25	80	9.6
25	81	7.6
25	82	8.0
26	79	9.8
26	80	8.7
26	81	9.8
26	82	9.8
26	96	6.9
26	97	5.3
27	80	8.9
27	82	7.6
27	95	8.1
27	96	6.7
27	97	4.2
28	80	8.7
28	82	6.4
28	85	8.2
28	88	8.5
28	89	7.5
28	90	8.1
28	91	8.3
28	92	8.0
28	93	7.5

LAT (°)	LONG (°)	90% VIS (nm)
28	94	6.6
28	95	6.3
28	96	6.3
29	80	7.7
29	81	6.3
29	82	7.5
29	83	8.2
29	84	3.8
29	85	6.8
29	86	6.9
29	87	6.8
29	88	6.7
29	89	4.5
29	90	6.3
29	91	7.4
29	92	7.5
29	93	6.7
29	94	6.1
29	95	6.1
30	80	6.9
30	81	6.3
30	84	7.1
30	85	6.8
30	86	6.9
30	87	6.4
30	88	6.5
30	89	4.5
31	80	7.4
31	81	7.7

- Note: Round the LAT and LONG down to a whole degree.

RANGE LIGHT SIGNAL PERFORMANCE DATA

RL-14 RANGE LANTERN
WHITE

Characteristic:			Q	Iso 2 / Fl 2.5 (1)	Occ 4 / Iso 6	F
Contact Closure Time (sec):			0.3	1.0	3.0	Fixed
Lens:	*Lamp:*					
0 Deg	12 VDC	0.25 A	*N/A*	*N/A*	*N/A*	*N/A*
		0.55 A	*N/A*	*N/A*	*N/A*	*N/A*
WHITE		0.77 A	*N/A*	*N/A*	*N/A*	*N/A*
		1.15 A	*N/A*	*N/A*	*N/A*	*N/A*
		2.03 A	*N/A*	*N/A*	*N/A*	*N/A*
		3.05 A	*N/A*	*N/A*	*N/A*	*N/A*
		1.0 A	83,000	140,000	160,000	180,000
		1.9 A	100,000	200,000	240,000	260,000
		3.0 A	*N/A*	320,000	380,000	410,000
		35 W	*N/A*	530,000	630,000	690,000
		50 W	*N/A*	600,000	760,000	820,000
		75 W	*N/A*	740,000	960,000	1,000,000
		100 W	*N/A*	920,000	1,200,000	1,300,000
		110 W	*N/A*	980,000	1,300,000	1,500,000
	120 VAC	150 W	340,000	610,000	700,000	760,000
		250 W	290,000	590,000	700,000	750,000
3 Deg	12 VDC	0.25 A	7,300	11,000	13,000	14,000
		0.55 A	18,000	29,000	34,000	36,000
WHITE		0.77 A	24,000	40,000	45,000	49,000
		1.15 A	35,000	62,000	72,000	77,000
		2.03 A	54,000	110,000	130,000	140,000
		3.05 A	*N/A*	150,000	180,000	200,000
		1.0 A	29,000	50,000	58,000	62,000
		1.9 A	43,000	83,000	99,000	110,000
		3.0 A	*N/A*	140,000	170,000	180,000
		35 W	*N/A*	190,000	230,000	250,000
		50 W	*N/A*	240,000	310,000	330,000
		75 W	*N/A*	330,000	430,000	470,000
		100 W	*N/A*	440,000	590,000	640,000
		110 W	*N/A*	450,000	610,000	670,000
	120 VAC	150 W	190,000	330,000	390,000	420,000
		250 W	180,000	360,000	430,000	470,000

RANGE LIGHT SIGNAL PERFORMANCE DATA

RL-14 RANGE LANTERN
WHITE

Characteristic:			Q	Iso 2 / Fl 2.5(1)	Occ 4 / Iso 6	F
Contact Closure Time (sec):			0.3	1.0	3.0	Fixed
Lens:	***Lamp:***					
8 Deg	12 VDC	0.25 A	2,800	4,300	4,800	5,200
		0.55 A	8,400	14,000	16,000	17,000
WHITE		0.77 A	10,000	17,000	19,000	21,000
		1.15 A	16,000	28,000	33,000	35,000
		2.03 A	26,000	51,000	61,000	66,000
		3.05 A	*N/A*	79,000	94,000	100,000
		1.0 A	13,000	23,000	26,000	28,000
		1.9 A	20,000	39,000	46,000	50,000
		3.0 A	*N/A*	65,000	78,000	85,000
		35 W	*N/A*	90,000	110,000	120,000
		50 W	*N/A*	120,000	150,000	160,000
		75 W	*N/A*	160,000	200,000	220,000
		100 W	*N/A*	220,000	290,000	320,000
		110 W	*N/A*	220,000	300,000	330,000
	120 VAC	150 W	100,000	180,000	210,000	230,000
		250 W	110,000	220,000	260,000	280,000
11 Deg	12 VDC	0.25 A	2,000	3,000	3,400	3,700
		0.55 A	5,900	9,600	11,000	12,000
WHITE		0.77 A	7,600	12,000	14,000	15,000
		1.15 A	12,000	21,000	24,000	26,000
		2.03 A	19,000	37,000	45,000	48,000
		3.05 A	*N/A*	56,000	67,000	73,000
		1.0 A	11,000	20,000	23,000	24,000
		1.9 A	16,000	31,000	37,000	40,000
		3.0 A	*N/A*	53,000	63,000	69,000
		35 W	*N/A*	73,000	87,000	95,000
		50 W	*N/A*	94,000	120,000	130,000
		75 W	*N/A*	130,000	160,000	180,000
		100 W	*N/A*	170,000	230,000	250,000
		110 W	*N/A*	180,000	240,000	260,000
	120 VAC	150 W	78,000	140,000	160,000	170,000
		250 W	84,000	170,000	200,000	220,000

RANGE LIGHT SIGNAL PERFORMANCE DATA

RL-14 RANGE LANTERN
WHITE

Characteristic:			Q	Iso 2 / Fl 2.5(1)	Occ 4 / Iso 6	F
Contact Closure Time (sec):			0.3	1.0	3.0	Fixed
Lens:	*Lamp:*					
20 Deg	12 VDC	0.25 A	1,100	1,600	1,900	2,000
		0.55 A	3,300	5,300	6,100	6,600
WHITE		0.77 A	4,200	6,700	7,700	8,300
		1.15 A	6,400	11,000	13,000	14,000
		2.03 A	10,000	20,000	24,000	26,000
		3.05 A	*N/A*	30,000	36,000	40,000
		1.0 A	5,100	8,800	10,000	11,000
		1.9 A	7,600	15,000	18,000	19,000
		3.0 A	*N/A*	25,000	30,000	33,000
		35 W	*N/A*	33,000	39,000	43,000
		50 W	*N/A*	44,000	55,000	60,000
		75 W	*N/A*	61,000	79,000	86,000
		100 W	*N/A*	84,000	110,000	120,000
		110 W	*N/A*	84,000	110,000	130,000
	120 VAC	150 W	41,000	73,000	85,000	91,000
		250 W	44,000	89,000	110,000	110,000
28 Deg	12 VDC	0.25 A	860	1,300	1,500	1,600
		0.55 A	2,600	4,100	4,700	5,100
WHITE		0.77 A	3,100	4,900	5,700	6,100
		1.15 A	4,900	8,600	10,000	11,000
		2.03 A	7,600	15,000	18,000	19,000
		3.05 A	*N/A*	23,000	28,000	30,000
		1.0 A	3,900	6,600	7,600	8,200
		1.9 A	5,900	11,000	14,000	15,000
		3.0 A	*N/A*	20,000	23,000	25,000
		35 W	*N/A*	22,000	26,000	28,000
		50 W	*N/A*	33,000	42,000	46,000
		75 W	*N/A*	47,000	61,000	66,000
		100 W	*N/A*	63,000	83,000	91,000
		110 W	*N/A*	64,000	87,000	96,000
	120 VAC	150 W	32,000	57,000	66,000	71,000
		250 W	35,000	71,000	85,000	91,000

RANGE LIGHT SIGNAL PERFORMANCE DATA

RL-14 RANGE LANTERN
GREEN

Characteristic:			Q	Iso 2 / Fl 2.5(1)	Occ 4 / Iso 6	F
Contact Closure Time (sec):			0.3	1.0	3.0	Fixed
Lens:	***Lamp:***					
0 Deg	12 VDC	0.25 A	*N/A*	*N/A*	*N/A*	*N/A*
		0.55 A	*N/A*	*N/A*	*N/A*	*N/A*
GREEN		0.77 A	*N/A*	*N/A*	*N/A*	*N/A*
		1.15 A	*N/A*	*N/A*	*N/A*	*N/A*
		2.03 A	*N/A*	*N/A*	*N/A*	*N/A*
		3.05 A	*N/A*	*N/A*	*N/A*	*N/A*
		1.0 A	19,000	33,000	38,000	41,000
		1.9 A	24,000	47,000	56,000	60,000
		3.0 A	*N/A*	73,000	87,000	95,000
		35 W	*N/A*	130,000	150,000	160,000
		50 W	*N/A*	140,000	180,000	200,000
		75 W	*N/A*	180,000	230,000	250,000
		100 W	*N/A*	220,000	290,000	320,000
		110 W	*N/A*	230,000	320,000	350,000
	120 VAC	150 W	85,000	150,000	180,000	190,000
		250 W	74,000	150,000	180,000	190,000
3 Deg	12 VDC	0.25 A	1,700	2,600	2,900	3,100
		0.55 A	4,200	6,700	7,700	8,300
GREEN		0.77 A	5,600	9,100	10,000	11,000
		1.15 A	8,000	14,000	16,000	18,000
		2.03 A	12,000	25,000	30,000	32,000
		3.05 A	*N/A*	35,000	42,000	46,000
		1.0 A	6,700	11,000	13,000	14,000
		1.9 A	9,800	19,000	23,000	25,000
		3.0 A	*N/A*	32,000	38,000	42,000
		35 W	*N/A*	45,000	54,000	59,000
		50 W	*N/A*	58,000	74,000	80,000
		75 W	*N/A*	79,000	100,000	110,000
		100 W	*N/A*	110,000	140,000	150,000
		110 W	*N/A*	110,000	150,000	160,000
	120 VAC	150 W	47,000	83,000	96,000	100,000
		250 W	45,000	91,000	110,000	120,000

RANGE LIGHT SIGNAL PERFORMANCE DATA

RL-14 RANGE LANTERN
GREEN

Characteristic:			**Q**	**Iso 2 / Fl 2.5(1)**	**Occ 4 / Iso 6**	**F**
Contact Closure Time (sec):			0.3	1.0	3.0	Fixed
Lens:	***Lamp:***					
8 Deg	12 VDC	0.25 A	650	980	1,100	1,200
		0.55 A	1,900	3,100	3,600	3,900
GREEN		0.77 A	2,400	3,800	4,400	4,700
		1.15 A	3,600	6,500	7,500	8,100
		2.03 A	5,900	12,000	14,000	15,000
		3.05 A	*N/A*	18,000	22,000	23,000
		1.0 A	3,100	5,200	6,100	6,500
		1.9 A	4,600	8,900	11,000	11,000
		3.0 A	*N/A*	15,000	18,000	20,000
		35 W	*N/A*	22,000	26,000	28,000
		50 W	*N/A*	28,000	35,000	38,000
		75 W	*N/A*	37,000	48,000	53,000
		100 W	*N/A*	53,000	70,000	77,000
		110 W	*N/A*	54,000	73,000	80,000
	120 VAC	150 W	26,000	46,000	53,000	57,000
		250 W	27,000	55,000	65,000	70,000
11 Deg	12 VDC	0.25 A	460	700	790	850
		0.55 A	1,400	2,200	2,500	2,700
GREEN		0.77 A	1,700	2,800	3,300	3,500
		1.15 A	2,700	4,700	5,500	5,900
		2.03 A	4,300	8,600	10,000	11,000
		3.05 A	*N/A*	13,000	15,000	17,000
		1.0 A	2,600	4,500	5,200	5,600
		1.9 A	3,700	7,100	8,500	9,100
		3.0 A	*N/A*	12,000	15,000	16,000
		35 W	*N/A*	18,000	21,000	23,000
		50 W	*N/A*	23,000	28,000	31,000
		75 W	*N/A*	30,000	39,000	43,000
		100 W	*N/A*	42,000	55,000	60,000
		110 W	*N/A*	42,000	58,000	63,000
	120 VAC	150 W	19,000	35,000	40,000	43,000
		250 W	21,000	42,000	50,000	54,000

RANGE LIGHT SIGNAL PERFORMANCE DATA

RL-14 RANGE LANTERN
GREEN

Characteristic:			Q	Iso 2 / Fl 2.5(1)	Occ 4 / Iso 6	F
Contact Closure Time (sec):			0.3	1.0	3.0	Fixed
Lens:	***Lamp:***					
20 Deg GREEN	12 VDC	0.25 A	250	380	430	460
		0.55 A	760	1,200	1,400	1,500
		0.77 A	950	1,500	1,800	1,900
		1.15 A	1,500	2,600	3,000	3,300
		2.03 A	2,300	4,600	5,500	5,900
		3.05 A	*N/A*	7,000	8,400	9,100
		1.0 A	1,200	2,000	2,300	2,500
		1.9 A	1,700	3,400	4,000	4,300
		3.0 A	*N/A*	5,800	6,900	7,500
		35 W	*N/A*	7,900	9,400	10,000
		50 W	*N/A*	10,000	13,000	14,000
		75 W	*N/A*	15,000	19,000	21,000
		100 W	*N/A*	20,000	27,000	29,000
		110 W	*N/A*	20,000	27,000	30,000
	120 VAC	150 W	10,000	18,000	21,000	23,000
		250 W	11,000	22,000	27,000	29,000
28 Deg GREEN	12 VDC	0.25 A	200	300	340	370
		0.55 A	590	950	1,100	1,200
		0.77 A	700	1,100	1,300	1,400
		1.15 A	1,100	2,000	2,300	2,500
		2.03 A	1,700	3,500	4,100	4,500
		3.05 A	*N/A*	5,300	6,300	6,900
		1.0 A	890	1,500	1,800	1,900
		1.9 A	1,300	2,600	3,100	3,400
		3.0 A	*N/A*	4,500	5,400	5,900
		35 W	*N/A*	5,200	6,300	6,800
		50 W	*N/A*	8,000	10,000	11,000
		75 W	*N/A*	11,000	15,000	16,000
		100 W	*N/A*	15,000	20,000	22,000
		110 W	*N/A*	15,000	21,000	23,000
	120 VAC	150 W	8,000	14,000	17,000	18,000
		250 W	8,900	18,000	21,000	23,000

RANGE LIGHT SIGNAL PERFORMANCE DATA

RL-14 RANGE LANTERN
RED

Characteristic:			**Q**	**Iso 2 / Fl 2.5(1)**	**Occ 4 / Iso 6**	**F**
Contact Closure Time (sec):			0.3	1.0	3.0	Fixed
Lens:	***Lamp:***					
0 Deg	12 VDC	0.25 A	*N/A*	*N/A*	*N/A*	*N/A*
		0.55 A	*N/A*	*N/A*	*N/A*	*N/A*
RED		0.77 A	*N/A*	*N/A*	*N/A*	*N/A*
		1.15 A	*N/A*	*N/A*	*N/A*	*N/A*
		2.03 A	*N/A*	*N/A*	*N/A*	*N/A*
		3.05 A	*N/A*	*N/A*	*N/A*	*N/A*
		1.0 A	15,000	26,000	30,000	32,000
		1.9 A	19,000	37,000	44,000	47,000
		3.0 A	*N/A*	57,000	68,000	74,000
		35 W	*N/A*	79,000	95,000	100,000
		50 W	*N/A*	90,000	110,000	120,000
		75 W	*N/A*	110,000	140,000	160,000
		100 W	*N/A*	140,000	180,000	200,000
		110 W	*N/A*	150,000	200,000	220,000
	120 VAC	150 W	65,000	120,000	130,000	140,000
		250 W	56,000	110,000	130,000	140,000
3 Deg	12 VDC	0.25 A	1,300	2,000	2,300	2,400
		0.55 A	3,300	5,300	6,100	6,500
RED		0.77 A	4,400	7,100	8,200	8,800
		1.15 A	6,200	11,000	13,000	14,000
		2.03 A	9,800	20,000	23,000	25,000
		3.05 A	*N/A*	28,000	33,000	36,000
		1.0 A	5,200	8,900	10,000	11,000
		1.9 A	7,700	15,000	18,000	19,000
		3.0 A	*N/A*	25,000	30,000	33,000
		35 W	*N/A*	28,000	34,000	37,000
		50 W	*N/A*	37,000	46,000	50,000
		75 W	*N/A*	50,000	64,000	70,000
		100 W	*N/A*	67,000	89,000	96,000
		110 W	*N/A*	67,000	91,000	100,000
	120 VAC	150 W	35,000	63,000	73,000	79,000
		250 W	35,000	69,000	82,000	89,000

RANGE LIGHT SIGNAL PERFORMANCE DATA

RL-14 RANGE LANTERN
RED

Characteristic:			Q	Iso 2 / Fl 2.5(1)	Occ 4 / Iso 6	F
Contact Closure Time (sec):			0.3	1.0	3.0	Fixed
Lens:	*Lamp:*					
8 Deg	12 VDC	0.25 A	510	770	870	940
		0.55 A	1,500	2,400	2,800	3,000
RED		0.77 A	1,900	3,000	3,400	3,700
		1.15 A	2,900	5,100	5,900	6,300
		2.03 A	4,600	9,200	11,000	12,000
		3.05 A	*N/A*	14,000	17,000	18,000
		1.0 A	2,400	4,100	4,700	5,100
		1.9 A	3,600	7,000	8,300	8,900
		3.0 A	*N/A*	12,000	14,000	15,000
		35 W	*N/A*	14,000	16,000	18,000
		50 W	*N/A*	17,000	22,000	24,000
		75 W	*N/A*	23,000	30,000	33,000
		100 W	*N/A*	33,000	44,000	48,000
		110 W	*N/A*	33,000	45,000	50,000
	120 VAC	150 W	20,000	35,000	40,000	44,000
		250 W	21,000	41,000	49,000	53,000
11 Deg	12 VDC	0.25 A	360	550	620	670
		0.55 A	1,100	1,700	2,000	2,100
RED		0.77 A	1,400	2,200	2,500	2,700
		1.15 A	2,100	3,700	4,300	4,600
		2.03 A	3,400	6,700	8,000	8,600
		3.05 A	*N/A*	10,000	12,000	13,000
		1.0 A	2,100	3,500	4,100	4,400
		1.9 A	2,900	5,600	6,600	7,100
		3.0 A	*N/A*	9,500	11,000	12,000
		35 W	*N/A*	11,000	13,000	14,000
		50 W	*N/A*	14,000	18,000	19,000
		75 W	*N/A*	19,000	24,000	27,000
		100 W	*N/A*	26,000	35,000	38,000
		110 W	*N/A*	27,000	36,000	40,000
	120 VAC	150 W	15,000	26,000	31,000	33,000
		250 W	16,000	32,000	38,000	41,000

RANGE LIGHT SIGNAL PERFORMANCE DATA

RL-14 RANGE LANTERN
RED

Characteristic:			Q	Iso 2 / Fl 2.5(1)	Occ 4 / Iso 6	F
Contact Closure Time (sec):			0.3	1.0	3.0	Fixed
Lens:	*Lamp:*					
20 Deg	12 VDC	0.25 A	190	300	330	360
		0.55 A	590	960	1,100	1,200
RED		0.77 A	750	1,200	1,400	1,500
		1.15 A	1,200	2,000	2,400	2,600
		2.03 A	1,800	3,600	4,300	4,600
		3.05 A	*N/A*	5,500	6,600	7,100
		1.0 A	930	1,600	1,800	2,000
		1.9 A	1,400	2,700	3,200	3,400
		3.0 A	*N/A*	4,500	5,400	5,900
		35 W	*N/A*	4,900	5,900	6,400
		50 W	*N/A*	6,500	8,200	8,900
		75 W	*N/A*	9,200	12,000	13,000
		100 W	*N/A*	13,000	17,000	18,000
		110 W	*N/A*	13,000	17,000	19,000
	120 VAC	150 W	7,800	14,000	16,000	17,000
		250 W	8,400	17,000	20,000	22,000
28 Deg	12 VDC	0.25 A	160	240	270	290
		0.55 A	460	740	850	920
RED		0.77 A	550	890	1,000	1,100
		1.15 A	870	1,600	1,800	1,900
		2.03 A	1,400	2,700	3,200	3,500
		3.05 A	*N/A*	4,200	5,000	5,400
		1.0 A	690	1,200	1,400	1,500
		1.9 A	1,100	2,100	2,500	2,600
		3.0 A	*N/A*	3,500	4,200	4,600
		35 W	*N/A*	3,300	3,900	4,300
		50 W	*N/A*	5,000	6,300	6,800
		75 W	*N/A*	7,100	9,200	9,900
		100 W	*N/A*	9,400	13,000	14,000
		110 W	*N/A*	9,600	13,000	14,000
	120 VAC	150 W	6,100	11,000	13,000	13,000
		250 W	6,700	13,000	16,000	17,000

RANGE LIGHT SIGNAL PERFORMANCE DATA

RL-24 RANGE LANTERN, 120 VAC

Characteristic:		**Iso 2 / Fl 2.5(1)**	**Occ 4 / Iso 6**	**F**
Contact Closure Time (sec):		1.0	3.0	Fixed
Lens:	***Lamp:***			
WHITE	500 W*	1,000,000	1,300,000	1,400,000
	1000 W	1,700,000	2,300,000	2,500,000
GREEN	500 W*	200,000	260,000	280,000
	1000 W	350,000	460,000	500,000
RED	500 W*	220,000	280,000	310,000
	1000 W	380,000	510,000	550,000

* Note: The 500W lamp intensities are displayed for those units who currently use the 500W lamps. The lamps are no longer manufactured and should not be used to design new ranges.

RANGE LIGHT SIGNAL PERFORMANCE DATA

300MM LANTERN

Characteristic:			Q	Iso 2 / Fl 2.5(1)	Occ 4 / Iso 6	F
Contact Closure Time (sec):			0.3	1.0	3.0	Fixed
Lens:	***Lamp:***					
WHITE	12 VDC	0.25 A	55	80	90	100
		0.55 A	130	210	240	260
		0.77 A	200	320	370	400
		1.15 A	250	440	510	550
		2.03 A	410	820	980	1,100
		3.05 A	*N/A*	1,200	1,400	1,500
		110 W	*N/A*	4,100	5,500	6,000
	120 VAC	250 W	2,500	5,100	6,000	6,500
YELLOW	12 VDC	0.25 A	35	55	60	65
		0.55 A	85	140	160	170
		0.77 A	130	210	240	260
		1.15 A	160	290	330	360
		2.03 A	270	530	630	680
		3.05 A	*N/A*	750	900	970
		110 W	*N/A*	2,600	3,500	3,800
	120 VAC	250 W	1,600	3,300	3,900	4,200
GREEN & RED	12 VDC	0.25 A	15	25	25	30
		0.55 A	35	60	70	75
		0.77 A	55	90	100	110
		1.15 A	70	120	140	150
		2.03 A	110	230	270	290
		3.05 A	*N/A*	320	390	420
		110 W	*N/A*	990	1,300	1,400
	120 VAC	250 W	710	1,400	1,700	1,800

RANGE LIGHT SIGNAL PERFORMANCE DATA

250MM LANTERN
with Condensing Panels

Characteristic:			**Q**	**Iso 2 / Fl 2.5(1)**	**Occ 4 / Iso 6**	**F**
Contact Closure Time (sec):			0.3	1.0	3.0	Fixed
Lens:	***Lamp:***					
WHITE	12 VDC	0.25 A	460	700	790	850
		0.55 A	900	1,500	1,700	1,800
		0.77 A	2,000	3,200	3,700	4,000
		1.15 A	2,500	4,400	5,100	5,500
		2.03 A	3,500	7,000	8,400	9,000
		3.05 A	*N/A*	8,500	10,000	11,000
	120 VAC	250 W	20,000	39,000	47,000	50,000
YELLOW	12 VDC	0.25 A	330	490	560	600
		0.55 A	630	1,000	1,200	1,300
		0.77 A	1,400	2,300	2,600	2,800
		1.15 A	1,800	3,100	3,600	3,900
		2.03 A	2,500	5,000	5,900	6,400
		3.05 A	*N/A*	6,000	7,200	7,800
	120 VAC	250 W	14,000	28,000	33,000	36,000
GREEN & RED	12 VDC	0.25 A	140	220	250	260
		0.55 A	280	450	520	560
		0.77 A	620	1,000	1,100	1,200
		1.15 A	770	1,400	1,600	1,700
		2.03 A	1,100	2,200	2,600	2,800
		3.05 A	*N/A*	2,600	3,100	3,400
	120 VAC	250 W	6,000	12,000	14,000	16,000

Note: When the ESNA reflex reflector is used to back up a condensing panel, increase the listed intensitities by 20%.

RANGE LIGHT SIGNAL PERFORMANCE DATA

250MM LANTERN

Characteristic:			**Q**	**Iso 2 / Fl 2.5(1)**	**Occ 4 / Iso 6**	**F**
Contact Closure Time (sec):			0.3	1.0	3.0	Fixed
Lens:	***Lamp:***					
WHITE	12 VDC	0.25 A	40	55	65	70
		0.55 A	90	150	170	180
		0.77 A	130	220	250	270
		1.15 A	180	320	370	400
		2.03 A	300	600	720	770
		3.05 A	*N/A*	810	970	1,100
	120 VAC	250 W	1,700	3,500	4,100	4,400
YELLOW	12 VDC	0.25 A	25	40	45	50
		0.55 A	65	100	120	130
		0.77 A	95	160	180	190
		1.15 A	130	230	260	280
		2.03 A	210	430	510	550
		3.05 A	*N/A*	570	690	750
	120 VAC	250 W	1,200	2,500	2,900	3,200
GREEN & RED	12 VDC	0.25 A	10	20	20	20
		0.55 A	30	45	50	55
		0.77 A	40	70	80	85
		1.15 A	55	100	120	120
		2.03 A	95	190	220	240
		3.05 A	*N/A*	250	300	320
	120 VAC	250 W	540	1,100	1,300	1,400

Note: The standard 250MM is limited to 75W steady. This restricts the 250W lamps to 30% duty cycles. The vented 250MM can accept 200W steady, 80% duty cycle for 250W lamps. When the ESNA reflex reflector is used, increase the listed intensities by 30% in the horizontal arc (60 per reflector) across from each reflector panel.

RANGE LIGHT SIGNAL PERFORMANCE DATA

155MM LANTERN

Characteristic:			**Q**	**Iso 2 / Fl 2.5(1)**	**Occ 4 / Iso 6**	**F**
Contact Closure Time (sec):			0.3	1.0	3.0	Fixed
Lens:	***Lamp:***					
WHITE	12 VDC	0.25 A	25	40	45	50
		0.55 A	60	95	110	120
		0.77 A	90	150	170	180
		1.15 A	120	210	240	260
		2.03 A	190	390	460	500
YELLOW	12 VDC	0.25 A	20	30	35	35
		0.55 A	45	70	85	90
		0.77 A	65	110	120	130
		1.15 A	85	150	180	190
		2.03 A	140	290	340	370
GREEN	12 VDC	0.25 A	10	15	15	20
		0.55 A	20	35	40	45
		0.77 A	35	55	60	65
		1.15 A	40	75	85	95
		2.03 A	70	140	170	180
RED	12 VDC	0.25 A	8	10	15	15
		0.55 A	20	30	35	35
		0.77 A	25	40	50	50
		1.15 A	35	60	70	75
		2.03 A	55	110	130	140

Note: The 3.05a lamp intensity values are not listed here because the lamp, with its large S-11 bulb will not fit in the 155MM lantern when used in the CG-6P six-place lampchanger.

RANGE LIGHT SIGNAL PERFORMANCE DATA

FA-240 RANGE LANTERN
WHITE

Characteristic:			**Q**	**Iso 2 / Fl 2.5(1)**	**Occ 4 / Iso 6**	**F**
Contact Closure Time (sec):			0.3	1.0	3.0	Fixed
Lens:	***Lamp:***					
WHITE						
3.5 Deg	12 VDC	0.25 A	1,300	2,000	2,300	2,500
		0.55 A	2,900	4,700	5,400	5,800
		0.77 A	5,200	8,300	9,600	10,000
		1.15 A	6,400	11,000	13,000	14,000
		2.03 A	12,000	24,000	29,000	31,000
8 Deg	12 VDC	0.25 A	770	1,200	1,300	1,400
		0.55 A	1,700	2,700	3,100	3,300
		0.77 A	3,100	5,100	5,800	6,300
		1.15 A	3,900	7,000	8,100	8,700
		2.03 A	6,900	14,000	17,000	18,000
30 Deg	12 VDC	0.25 A	180	280	320	340
		0.55 A	400	650	740	800
		0.77 A	750	1,200	1,400	1,500
		1.15 A	970	1,700	2,000	2,200
		2.03 A	1,700	3,500	4,200	4,500

Note: FA-240 range lanterns may be used as long as they remain serviceable, but are not considered standard equipment for new installations.

RANGE LIGHT SIGNAL PERFORMANCE DATA

FA-240 RANGE LANTERN
YELLOW

Characteristic:			**Q**	**Iso 2 / Fl 2.5(1)**	**Occ 4 / Iso 6**	**F**
Contact Closure Time (sec):			0.3	1.0	3.0	Fixed
Lens:	***Lamp:***					
YELLOW						
3.5 Deg	12 VDC	0.25 A	1,100	1,600	1,800	2,000
		0.55 A	2,300	3,700	4,300	4,600
		0.77 A	4,100	6,700	7,700	8,200
		1.15 A	5,100	9,200	11,000	11,000
		2.03 A	9,600	19,000	23,000	25,000
8 Deg	12 VDC	0.25 A	610	930	1,100	1,100
		0.55 A	1,300	2,100	2,500	2,600
		0.77 A	2,500	4,100	4,700	5,000
		1.15 A	3,100	5,600	6,500	7,000
		2.03 A	5,600	11,000	13,000	14,000
30 Deg	12 VDC	0.25 A	150	220	250	270
		0.55 A	320	520	600	640
		0.77 A	600	970	1,100	1,200
		1.15 A	770	1,400	1,600	1,700
		2.03 A	1,400	2,800	3,300	3,600

Note: FA-240 range lanterns may be used as long as they remain serviceable, but are not considered standard equipment for new installations.

RANGE LIGHT SIGNAL PERFORMANCE DATA

FA-240 RANGE LANTERN
GREEN

Characteristic:			**Q**	**Iso 2 / Fl 2.5(1)**	**Occ 4 / Iso 6**	**F**
Contact Closure Time (sec):			0.3	1.0	3.0	Fixed
Lens:	***Lamp:***					
GREEN						
3.5 Deg	12 VDC	0.25 A	370	570	640	690
		0.55 A	810	1,300	1,500	1,600
		0.77 A	1,400	2,300	2,700	2,900
		1.15 A	1,800	3,200	3,700	4,000
		2.03 A	3,400	6,700	8,000	8,600
8 Deg	12 VDC	0.25 A	210	330	370	400
		0.55 A	460	750	860	920
		0.77 A	880	1,400	1,600	1,800
		1.15 A	1,100	1,900	2,300	2,400
		2.03 A	1,900	3,900	4,600	5,000
30 Deg	12 VDC	0.25 A	51	78	89	95
		0.55 A	110	180	210	220
		0.77 A	210	340	390	420
		1.15 A	270	480	660	600
		2.03 A	490	980	1,200	1,300

Note: FA-240 range lanterns may be used as long as they remain serviceable, but are not considered standard equipment for new installations.

RANGE LIGHT SIGNAL PERFORMANCE DATA

FA-240 RANGE LANTERN
RED

Characteristic:			**Q**	**Iso 2 / Fl 2.5(1)**	**Occ 4 / Iso 6**	**F**
Contact Closure Time (sec):			0.3	1.0	3.0	Fixed
Lens:	***Lamp:***					
RED						
3.5 Deg	12 VDC	0.25 A	440	670	760	820
		0.55 A	950	1,500	1,800	1,900
		0.77 A	1,700	2,800	3,200	3,400
		1.15 A	2,100	3,800	4,400	4,700
		2.03 A	4,000	7,900	9,400	10,000
8 Deg	12 VDC	0.25 A	250	380	440	470
		0.55 A	540	880	1,000	1,100
		0.77 A	1,000	1,700	1,900	2,100
		1.15 A	1,300	2,300	2,700	2,900
		2.03 A	2,300	4,600	5,500	5,900
30 Deg	12 VDC	0.25 A	60	92	100	110
		0.55 A	130	210	250	260
		0.77 A	250	400	460	500
		1.15 A	320	570	660	710
		2.03 A	580	1,200	1,400	1,500

Note: FA-240 range lanterns may be used as long as they remain serviceable, but are not considered standard equipment for new installations.

Aid Name:	Smithville Entrance Channel	
Night or Day Lights? (N or D)	n	
Length of Channel:	9,000	(ft)
Width of Channel:	500	(ft)
Mean Range of Tide:	5	(ft)
Background Lighting: (none, minor or considerable)	minor	
Minimum Visibility:	6.3	(nm)
Design Visibility:	10	(nm)
Maximum Visibility:	20	(nm)
Distance between RFL & RRL:	2,000	(ft)
Distance RFL to near end channel:	4,000	(ft)
Safe Height Above Water:	10	(ft)
Dayboards to be used? (Y or N)	n	

Obstructions (optional):	Location*	Height**
#1		
#2		

*Distance from near end of channel to obstruction (ft).
**Height above MHW (ft).

No Dayboards, cell contents ignored:	68	
No Dayboards, cell contents ignored:	123	
RFL - Minimum Intensity:	424	(cd)
RFL - Selected Intensity (IF):	4,300	(cd)
RFL - Recommended Intensity:	4,238	(cd)
RFL - Maximum Intensity:	160,013	(cd)
RRL - Minimum Intensity:	660	(cd)
RRL - Selected Intensity (IR):	7,200	(cd)
RRL - Recommended Intensity:	7,137	(cd)
RRL - Maximum Intensity:	378,212	(cd)
Recommended IR/IF:	1.68	
IR/IF for selected intensities:	1.67	
Recommended Min Height RFL:	10	(ft)
Selected Height RFL:	22	(ft)
(RFL & RRL heights ref MHW)		
Recommended Min Height RRL:	49	(ft)
Selected Height RRL:	47	(ft)

Notes (optional):	RFL	RRL
(#) Optic:	(1) RL14	(1) RL14
Lamp:	0.77a	0.77a
Lens/Color:	3 deg/white	3 deg/white
Characteristic:	ISO Q W	ISO6 W

Smithville Entrance Channel

HEIGHT OF EYE: 20

Distance from Near End	Off Axis Distance (ft)	Cross Track Factor	Delta (mrad) (MLW)	PROBLEM CODES:
9,000	37	15%	1.6	1,
8,100	32	13%	1.6	1,
7,200	28	11%	1.8	
6,300	25	10%	1.9	
5,400	22	9%	2.0	
4,500	19	8%	2.2	
3,600	17	7%	2.4	
2,700	14	6%	2.6	
1,800	12	5%	2.9	
900	10	4%	3.2	
0	8	3%	3.5	

HEIGHT OF EYE: 50

Distance from Near End	Off Axis Distance (ft)	Cross Track Factor	Delta (mrad) (MLW)
9,000	38	15%	1.9
8,100	35	14%	2.0
7,200	32	13%	2.2
6,300	29	11%	2.4
5,400	26	10%	2.6
4,500	23	9%	2.9
3,600	20	8%	3.2
2,700	18	7%	3.6
1,800	16	6%	4.2
900	13	5%	4.9
0	11	4%	6.0

HEIGHT OF EYE: 80

Distance from Near End	Off Axis Distance (ft)	Cross Track Factor	Delta (mrad) (MLW)
9,000	42	17%	2.2
8,100	38	15%	2.4
7,200	35	14%	2.6
6,300	32	13%	2.8
5,400	29	12%	3.1
4,500	27	11%	3.5
3,600	24	10%	4.0
2,700	22	9%	4.7
1,800	19	7%	5.5
900	16	6%	6.7
0	13	5%	8.5

Smithville Entrance Channel

ILLUMINANCE RATIOS & VALUES

Distance from Near End	For 10 nm visibility: (E in sea mile-candela) E+/E-	E (RFL)	E (RRL)
9,000	1.1	496	565
8,100	1.1	598	668
7,200	1.1	730	797
6,300	1.1	902	960
5,400	1.0	1,132	1,168
4,500	1.0	1,447	1,439
3,600	1.1	1,892	1,800
2,700	1.1	2,545	2,291
1,800	1.2	3,551	2,979
900	1.3	5,200	3,979
0	1.5	8,158	5,501

PROBLEM CODES:

1. Lights will blur.

RANGE DESIGN WORKSHEET

Range Name: _____ Light List # _____

Location of Range: _____ Chart # _____

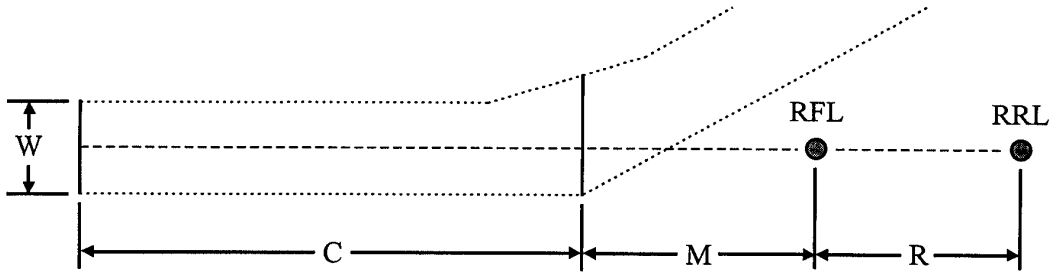

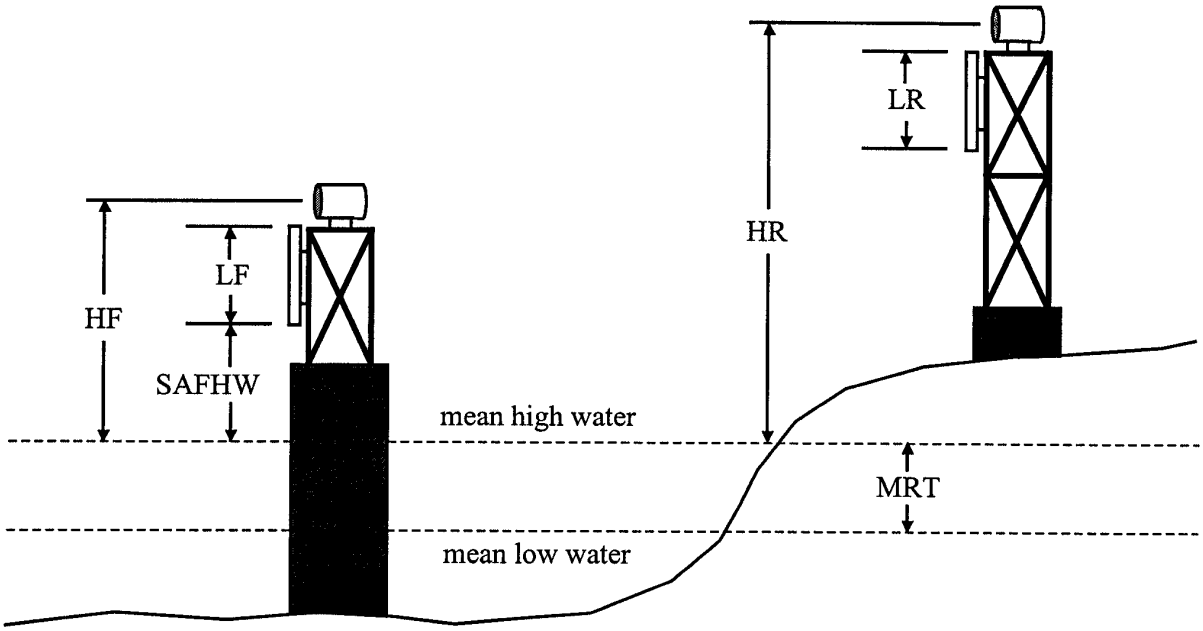

RANGE DESIGN WORKSHEET

1. **Night or Day Lights:** (N or D) _____

2. **Length of Channel (C):** _____ ft

3. **Width of Channel (W):** _____ ft

4. **Mean Range of Tide (MRT):** _____ ft

5. **Background Lighting:** (None, Minor, Considerable) _____

6. **Height of Eye of Observer:** _____ ft
   _____ ft
   _____ ft

7. **Minimum Visibility:** _____ nm

8. **Design Visibility:** _____ nm

9. **Maximum Visibility:** _____ nm

10. **Distance Between RFL & RRL (R):** _____ ft

11. **Distance RFL to Near End Channel (M):** _____ ft

12. **Safe Height Above Water (SAFHW):** _____ ft

13. **Dayboards To Be Used:** (Y or N) _____

14. **Obstructions:**
    Location: (distance from near end of channel) **Height:**
    _____ _____ ft
    _____ _____ ft

15. **RFL Dayboard Length:** _____ ft

16. **RRL Dayboard Length:** _____ ft

17. **RFL Intensity:** _____ cd

18. **RRL Intensity:** _____ cd

19. **Height RFL:** _____ ft

20. **Height RRL:** _____ ft

21. **(# of) Optics:** _____ _____

22. **Lamp:** _____ _____

23. **Lens / Color:** _____ _____

24. **Characteristic:** _____ _____