U.S. Department of Transportation
United States Coast Guard

Commandant
United States Coast Guard

2100 Second Street, S.W.
Washington, DC 20593-0001
Staff Symbol: (G-SEC)
Phone: (202) 267-1892

COMDTNOTE 16500
JUNE 25, 2001

COMMANDANT NOTICE 16500 CANCELLED:

Subj: CH-1 TO ALTERNATING CURRENT AIDS TO NAVIGATION SERVICING GUIDE, COMDTINST M16500.17

1. PURPOSE. This Notice promulgates changes to the Alternating Current Aids to Navigation Servicing Guide, COMDTINST M16500.17.

2. ACTION. Area and district commanders, commanders of maintenance and logistic commands and commanding officers of headquarters units shall ensure that the required changes are made to the Guide.

3. PROCEDURES. Make the pen and ink corrections detailed in enclosure (1) using a fine tip indelible ink magic marker.

Encl: (1) Change 1 to the Alternating Current Aids to Navigation Servicing Guide

DISTRIBUTION – SDL No.139

	a	b	c	d	e	f	g	h	i	j	k	l	m	n	o	p	q	r	s	t	u	v	w	x	y	z
A													2	2	2	2	2	2	2							
B		5	10		1														1							
C							2				2			2									3			
D				1																						
E																										
F																										
G																										
H																										

NON-STANDARD DISTRIBUTION: B:n RTC Yorktown (t-naton) (100 copies), C:i Station Channel Islands (2 copies), C:i Station St. Ignace (2 copies), C:i Station Burlington (2 copies)

CH-1 TO ALTERNATING CURRENT AIDS TO NAVIGATION SERVICING GUIDE, COMDTINST M16500.17

1. Add to the inside of the front cover “Change 1 entered (current date)”.

2. Page 2-10, paragraph e, change “above” to “below”.

3. Page 2-14 and page 2-28, paragraph m, add to the first sentence “Press the TEST button to”.

4. Page 2-20, paragraph I, delete the word “offset”.

5. Page 2-20, figure 2-14, add “(old style bracket)”.

6. Figures 2-6, 2-17, 2-22 and 4-4, change the notations between the flasher and lampchanger to read “White, Black and Red”, as shown below:

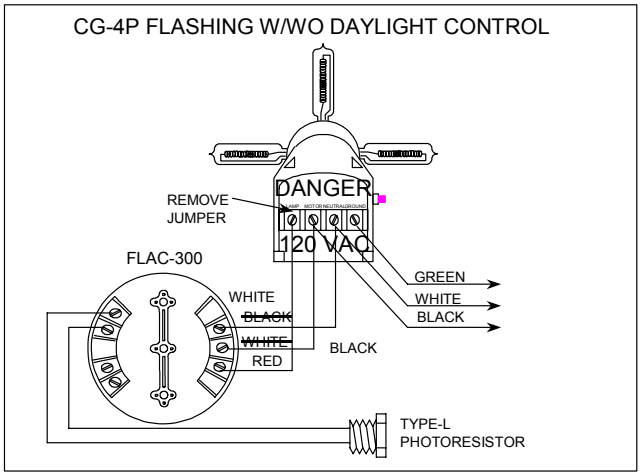

7. Figure 3-3, cross out the jumper on the small terminal strip connected to the rotation motor, and add the notation “(without heat switch)”, as shown below:

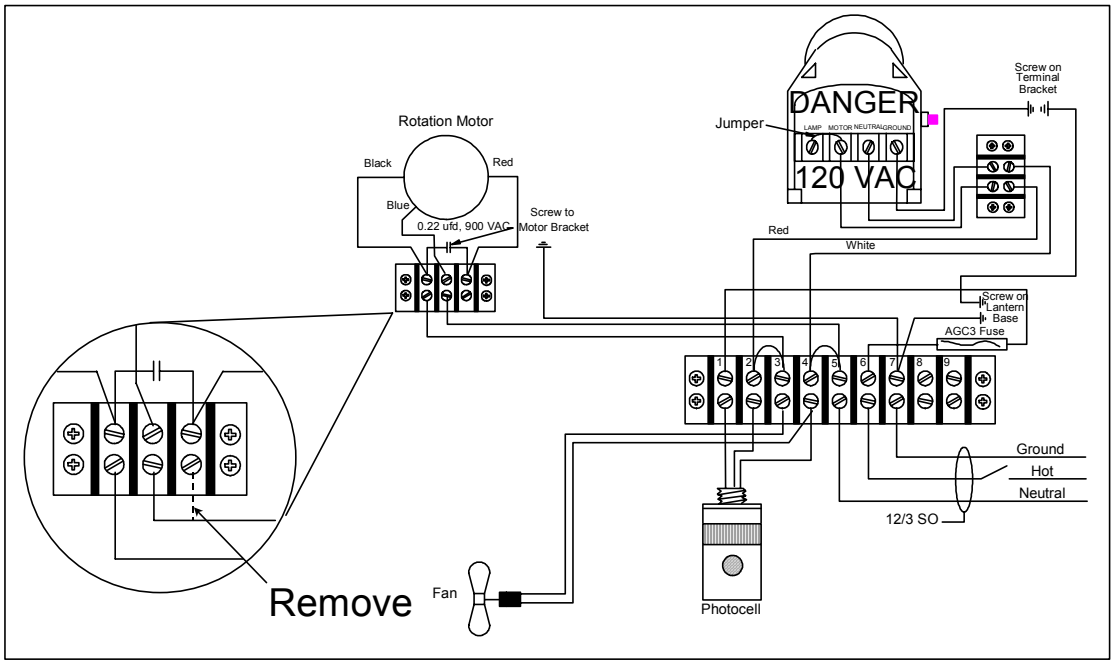

Figure 3-3 (without heat switch)

8. Page 7-5, step “9” should be step “8”, step “10” should be step “9”.

9. Page 7-5, add step “10. Output voltage should be pulsing AC voltage (if flashed) from 0-120 VAC.”

10. Page 7-10, Step 5, change “daytime” to “nighttime”.

U.S. Department of Transportation
United States Coast Guard

United States Coast Guard

2100 Second Street, S.W.
Washington, DC 20593-0001
Staff Symbol: G-SEC-2A
Phone: (202) 267-1892

COMDTINST M16500.17
MAY 21 1997

COMMANDANT INSTRUCTION M16500.17

Subj: ALTERNATING CURRENT AIDS TO NAVIGATION SERVICING GUIDE

1. PURPOSE. This Manual is a field guide for U.S. Coast Guard personnel who service aids to navigation hardware powered by alternating current (AC).

2. ACTION. Area and district commanders, commanders of maintenance and logistics commands and unit commanding officers shall ensure that the provisions of this Instruction are followed.

3. DIRECTIVES AFFECTED. None.

4. DISCUSSION. This Instruction provides field units with a pocket-sized guide for installing, maintaining and troubleshooting AC powered aids to navigation. The instruction contains information on hardware where no written literature is available and consolidates instructions from various manufacturers of hardware. It also provides important safeguards for personnel when working on or near AC power.

5. CHANGES. Recommendations for the improvement of this Instruction shall be submitted to Commandant (G-SEC) at jgrasson@comdt.uscg.mil.

/s/ E.C. KARNIS
Director of Engineering

TABLE OF CONTENTS

CHAPTER 1 - GENERAL	1-1
Safety Requirements	1-1
Conventions	1-1
Equipment	1-1
Lamps	1-3
Lampchangers	1-4
Flashers	1-5
Daylight Controls	1-5
Stuffing Tubes	1-6
CHAPTER 2 - OMNIDIRECTIONAL LANTERNS	2-1
250MM Lantern	2-1
300MM Lantern	2-17
Classical Lenses	2-31
CHAPTER 3 - ROTATING BEACONS	3-1
FA-251-AC	3-1
DCB-24 and DCB-224	3-14
CHAPTER 4 - RANGE LANTERNS	4-1
RL-14	4-1
RL-24	4-13
CHAPTER 5 - SOUND SIGNALS	5-1
CG-1000 Sound Signal System	5-1
CHAPTER 6 - POWER SYSTEMS	6-1
ATON Power Supply	6-1
CHAPTER 7 - CONTROL	7-1
ACFC	7-1
RSB-AC	7-6

PURPOSE OF THIS GUIDE

This guide provides information on the operation, inspection, troubleshooting, repair and maintenance of aids to navigation supplied by AC power.

Aids to navigation systems can be divided into four components: power, control, light and sound signals. This guide will address each section separately.

SAFETY

Operation of equipment while energized shall only be checked by a person trained on the operation and repair of the equipment. Replacement and servicing of all AC powered equipment shall be done with the power secured and tagged, if necessary.

CHAPTER 1. GENERAL

A. Safety Requirements. The following shall be worn or performed at the aid site:

1. Hard hats and steel toed boots

2. Safety Glasses or face shield when testing lamps and lampchangers.

3. Coast Guard approved work vests (life jackets), as required.

4. A safety belt will be worn and a safety climb rail will be used if the structure is 20 feet or higher.

5. Electrical equipment shall not be worked on while live, with the exception of checking for the presence of 120VAC using a VOM.

6. A "dead stick" shall be used to discharge all equipment capable of holding a charge after power is secured.

7. Disconnects shall be installed so that servicing personnel can easily and safely turn power off before working on an aid.

8. Disconnects shall be locked or tagged when off to prevent inadvertent powering of the circuit in accordance with COMDTINST 9077.1C.

B. Conventions.

1. Wire Color Coding. Wires are color coded and shall be installed such that BLACK is "Hot" (120VAC), WHITE is "Neutral" and GREEN is "Earth Ground".

C. Equipment.

1. The following equipment shall be carried to the aid site:

a. Fluke 77, Beckman HD100 meter (or approved voltmeter), inductive ammeter.

b. Small and medium tipped flathead screwdrivers.

c. Small and medium tipped Phillips screwdrivers.

d. Needle nose and linesman pliers

e. Wire and wire strippers.

f. Crimping tool and solderless terminals

g. Allen wrenches

h. Crescent wrench.

i. 9" torpedo level

j. Flashlight

k. Stainless hardware assortment.

l. Glass cleaner.

m. Medicinal swabs or denatured alcohol.

n. Clean rags

2. The following equipment, where appropriate, shall be carried to the aid:

a. Lampchanger (CG-4P or CG-2P).

b. Flasher (CG-181 or FLAC-300).

c. Daylight control (Type L, Intermatic K-4121 and 4221)

d. Lantern accessories (glazing compound, screws, stuffing tubes, grease, lube oil, spring scale, air filter, etc.)

e. Lamps, focus fixtures.

D. Lamps.

1. Notes. 120 VAC lamps are 150w, 250w and 1000w.

2. Care.

150w & 250w

a. Lamps should be handled carefully. Tungsten-halogen lamps are pressurized when in use and can explode or bubble if the glass envelope is contaminated with oil or dirt.

b. Use protective wrappers or a clean cloth when handling lamps. Wipe any dirt or fingerprints off lamp with a cloth wetted with denatured alcohol or with a medicinal swab.

E. Lampchangers.

CG-4P

1. CG-4P. The CG-4P lampchanger is a 120 VAC version used on aids equipped with 150 watt and 250 watt lamps.

2. CG-2P. The CG-2P lampchanger is used on aids equipped with 120 VAC, 1000 watt lamps

F. Flashers.

FLAC-300

1. FLAC-300. The FLAC-300 is Tideland Signal Corporation's 120 VAC flasher for use with the CG-4P lampchanger. It is capable of flashing lamps up to 250 watts. The type L daylight control can be used with it.

2. AC Flash Controller (ACFC). The ACFC is a device capable of flashing and/or daylight controlling all AC lamps up to 1000 watts. Modification of the ACFC allows control of up to 2000 watts. The ACFC uses a 12VDC CG-181 flasher with a Fixed rhythm and a type L photoresistor to perform the daylight control function. A CG-181 with a flashing rhythm is used when the light is flashed.

G. Daylight Controls.

1. Types.

a. Type L - is an external pipe plug type used in range lanterns, ACFC, and any drum lens with a fixed or flashing 120 VAC light.

b. K-4121 - manufactured by Intermatic, used in the FA-251-AC and can be used to control 120 VAC lights up to 1000 watts.

c. K-4221 - used in the RSB-AC, same as K-4121, but with a swivel base.

H. Stuffing Tubes.

1. Inspection. Replace if cracked or deteriorated.

2. To prevent twisting of the packing, assemble stuffing tubes as shown in Figure 1-1.

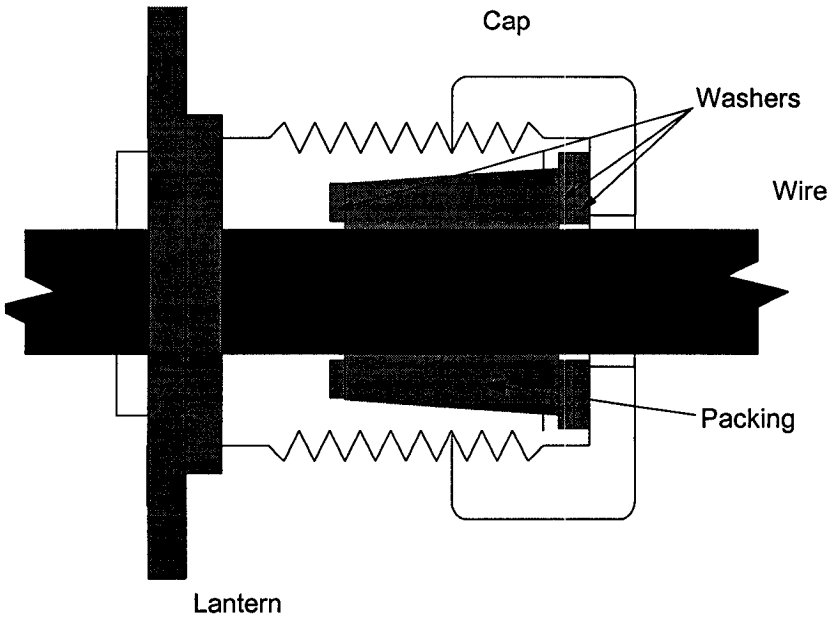

Figure 1-1

CHAPTER 2. OMNIDIRECTIONAL LANTERNS

A. 250 mm Lanterns.

1. Notes.

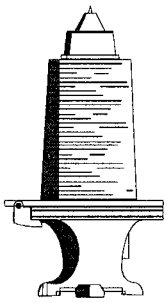

a. The 250mm lantern is used on stable platforms. This omnidirectional lantern requires precision focusing and leveling to ensure proper operation. The lens and lens cover are replaceable; beam color (white, yellow, red or green) is determined by the lens cover. Color sectored lens covers can be used and condensing panels can be added for range applications. The standard lantern can dissipate up to 75 watts of heat, the high wattage version can dissipate up to 200 watts.

2. Safety Warning.

a. **SECURE POWER TO THE AID PRIOR TO INSTALLATION AND SERVICING. CHECK TO BE SURE POWER IS OFF.**

b. Components in these lanterns become very hot when operating. Allow the lantern to cool off before removing lamps, lampchanger, etc., and wear gloves and long sleeves to protect your arms and hands from hot components.

c. Use extreme care when installing, operating,

testing, troubleshooting, or performing maintenance work on 120VAC powered aids.

3. Installation.

a. Install three (3) threaded rods or bolts on the platform as shown in Figure 2-1 (only three of the four holes in they base are used). Add the leveling nut and flat washer at this time.

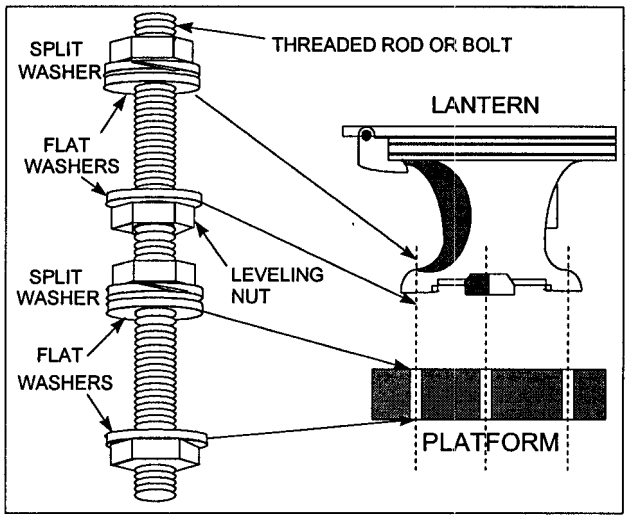

Figure 2-1

b. Position lantern legs over leveling bolts.

c. Place a top washer, split washer and nut on each bolt. **Do not tighten completely.**

d. With lens open, place a level on the flange of the lantern base. **The bubble level on the lantern shall not be used.** See Figure 2-2.

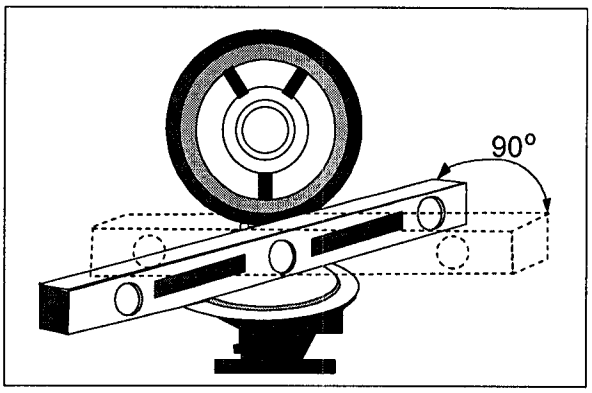

Figure 2-2

e. Adjust the leveling nuts up or down until level.

f. Move the level ninety (90) degrees from your first position and readjust.

g. Repeat the steps until the lantern is level in both positions.

h. Tighten top nuts on leveling bolts enough to compress the split washer. DO NOT OVERTIGHTEN.

i. Recheck levelness of lantern.

j. Lanterns burning fixed-on, 24 hours a day use a CG-4P lampchanger. Lanterns burning fixed and daylight controlled use a K4121 photocontrol and CG-4P. Lanterns with flashed rhythms use the FLAC-300, type L daylight control and CG-4P.

k. If the FLAC-300 flasher is going to be used, check the 250mm mounting bracket to see if a hole exists in the center to mount it. If a hole is not there, find the center of the bracket by drawing two diagonal lines connecting the lampchanger mounting holes. Drill a 1/4" hole at the intersection to mount the flasher with an 8-32x5/16" screw, as shown in Figure 2-3.

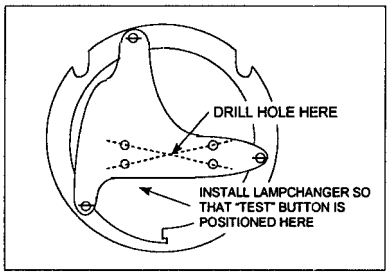

Figure 2-3

l. Attach the mounting bracket to the base of the CG-4P with the four 10-32x1/2" screws supplied so that the lampchanger's TEST button is opposite the "T" head on the bracket. If the FLAC-300 is used, attach it to the center hole with an 8-32x5/16" screw.

m. Wiring shall be 12/3 SO cable through a watertight stuffing tube, or individually insulated wires installed in conduit (Liquid-Flex near lantern). Wires shall have insulated spring spade lugs and terminated at the terminals "Black" (120VAC), "White" (Neutral) and "Green" (Ground) terminals of the CG-4P lampchanger, as shown in Figure 2-4 for fixed-on, 24 hours a day operation.

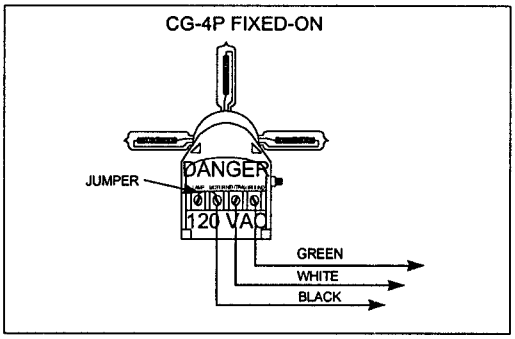

Figure 2-4

n. If the light burns fixed-on and is daylight controlled, install an Intermatic K4121 photocontrol in an unused cable entrance (a 3/4" to 1/2" reducer pipe bushing is needed to install this device in the lantern) as shown in Figure 2-5. Crimp connectors and 12" of color coded 16-18 AWG wire are necessary to extend the leads of the K4121 photocontrol.

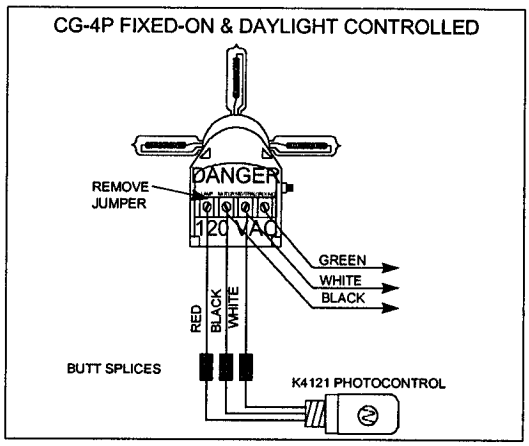

Figure 2-5

o. If flashed, install a FLAC-300 and type-L daylight control, as shown in Figure 2-6.

See CH-1 COMDTNOTE 16500, encl. (1) paragraph 6. for change.

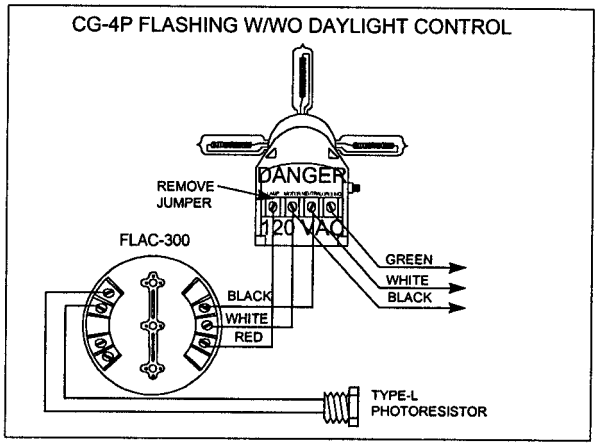

Figure 2-6

p. Attach the leads between the flasher (if used) and lampchanger, and the power cord assembly to the lampchanger at this time.

q. Install a 250 watt lamp focus fixture into the first position of the lampchanger. The fixture is installed by lining up the bayonet pins with the cooling fins of the turret, and pushing into the socket until it locks in place.

r. Install the 3/4" spacers on the mounting studs of

the lantern arms.

s. Install the lampchanger/flasher (if used) assembly onto the studs of the lantern arms, as shown in Figure 2-7. Tighten the wing nuts to secure.

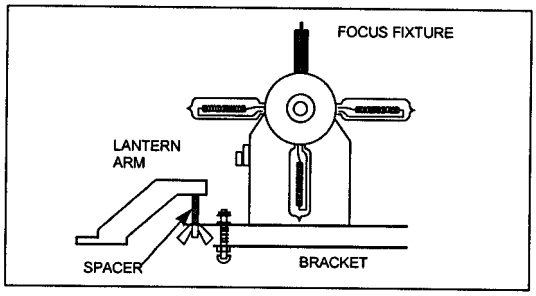

Figure 2-7

4. Focusing.

a. Loosen all screws on the lens cover clamping ring. See Figure 2-8.

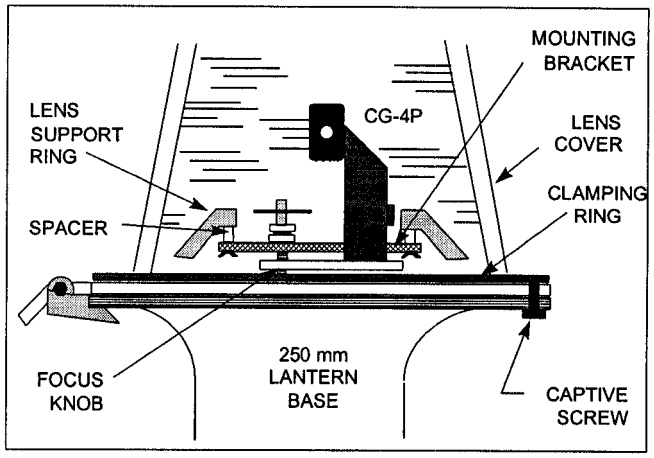

Figure 2-8

b. With lantern open, look into the lens cover. Rotate the lens cover until one of the focus knobs is aligned with one set of sighting marks. See Figure 2-9.

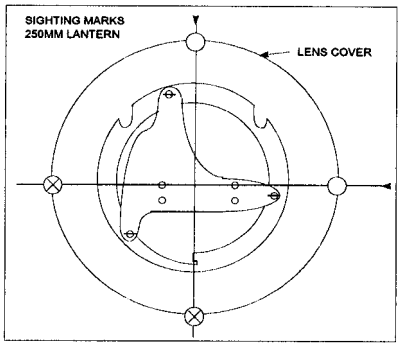

Figure 2-9

c. Secure the screws on the lens clamping ring.

d. Insert a focus fixture in the lampchanger by lining up the bayonet pins with the cooling fins and pushing into the socket until the fixture locks in place.

e. Secure the flasher/lampchanger assembly on studs ~~above~~ **below** the spacers.

f. Tighten the focus knobs ("D" rings) on the mounting bracket **COUNTER-CLOCKWISE** until the mounting bracket is tight against the mounting ring.

g. Turn each focus knob **CLOCKWISE** six (6)

complete revolutions. You should observe the focus fixture slightly below the sighting marks - if not right on.

h. Sight through the set of sighting marks (through "O" to "X") that are aligned with the focus knob.

i. Observe the focus fixture. Is it right or left or low? If so, turn one of the two focus knobs not aligned with the sighting marks until the focus fixture is centered.

j. If the focus fixture is above the sighting marks, turn each focus knob two (2) or three (3) more complete turns until it is either below or right on.

k. Sight through the other set of sighting marks.

l. Observe the focus fixture. Is it right or left or low? If so, turn only the third focus knob until the focus fixture is centered See Figure 2-11.

m. Repeat steps until you observe the focus fixture centered under both sets of sighting marks.

n. Finally, turn all focus knobs evenly **COUNTERCLOCKWISE** until the focus fixture is centered in the sighting marks.

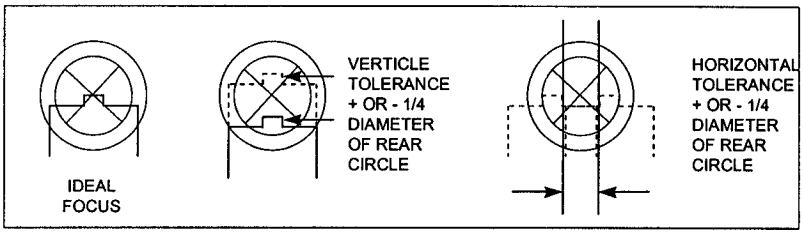

Figure 2-11

o. If you are still unable to focus -- Check for improper mounting, spacers, bent mounting bracket, etc. Then, **REPEAT PROCEDURES.**

p. Remove lampchanger/flasher assembly by loosening the three wing nuts. **DO NOT TURN THE "D" RINGS ON THE BRACKET.**

q. Remove the focus fixture by leaning it away from the frame and pull up. Install four 250W lamps by lining up the bayonet pins with the cooling fins in the turret and push into the socket until the fixture locks in place. Lamps should be installed with the turret in the "X" position so that no lamp compresses the spring contacts. Use a clean rag or the protective wrapper when handling lamps. Advance the lampchanger to the first position and reinstall in the lantern.

5. Maintenance

a. Secure power to the lantern and allow to cool if light was operational.

b. Visually inspect the lens and base for cracks, crazing, holes, etc. Replace if necessary.

c. Open lantern by loosening four screws on base below lantern ring. Swing lens open against stops.

d. Place a level on the base and check levelness in both directions. Correct if not level.

e. Remove lampchanger/flasher assembly by loosening the three wing nuts. **DO NOT TURN THE "D" RINGS ON THE BRACKET.**

f. Remove the operating lamp and any burned out lamps by leaning them away from the frame and pulling up. CAUTION - LAMPS MAY BE HOT. Use a clean rag when removing lamps.

g. Install the focus fixture in the lampchanger.

h. Reinstall the lampchanger assembly onto the lantern arms, over the spacers and secure.

i. Check the focus and adjust, if necessary, as

described in section 4.

j. Remove the lampchanger assembly from the lantern.

k. Advance unused lamps to the first positions and install new lamps in the remaining positions, as described in section 4.

l. Place the assembly in the base of the lantern, cover photocontrol or daylight control (note: K-4121 can take up to 5 minutes to switch), turn on power and press the TEST button until the turret advances past the 4th position (lamps form an "X" when complete). Secure power to the lampchanger. Replace the CG-4P if it fails to operate correctly and refocus.

m. Rotate turret to the first position, **press the TEST Button to**. CAUTION -LAMPS AND TURRET MAY BE HOT.

n. Reinstall the lampchanger assembly.

o. Close and secure the lens assembly.

p. Clean the lens cover, if necessary with a soft bristle brush and mild soap and water.

q. Turn on power (light should turn on), remove cover on daylight control or photocontrol (note: K-4121 can take up to 5 minutes to turn off light) and check for proper operation

5. Troubleshooting.

a. Check filament in operating lamp. Replace if necessary.

Fixed-on, 24 Hours a Day

b. Measure voltage at MOTOR and NEUTRAL terminals of the CG-4P. If 120VAC is not present, problem is with main power. If 120VAC is present and lamp is not lit, replace lampchanger.

Fixed-on, Daylight Controlled

c. Measure voltage at MOTOR and NEUTRAL terminals of the CG-4P. If 120VAC is not present, problem is with main power.

d. Cover photocontrol (note: the K-4121 can have up to a 5 minute delay when switching).

e. Measure voltage at LAMP and NEUTRAL terminals of the CG-4P. If 120VAC is not present, replace photocontrol. If 120VAC is present and lamp is not lit, replace lampchanger.

Flashing, Daylight Controlled

f. Measure voltage at MOTOR and NEUTRAL terminals of the CG-4P. If 120VAC is not present, problem is with main power.

g. Measure voltage at MOTOR and NEUTRAL terminals of the FLAC-300. If 120VAC is not present, replace black and white wires between flasher and lampchanger.

h. Cover daylight control. Measure voltage at LAMP and NEUTRAL terminals of the FLAC-300. If 120VAC is not present (should vary between 0 and 120VAC according to flash rhythm), remove daylight control. If 120VAC is present after removing daylight control, replace it. If 120VAC is still not present, repair or replace the FLAC-300. IF REPAIRED, BE SURE THE CORRECT RHYTHM CARD IS INSTALLED.

i. Measure voltage at LAMP and NEUTRAL terminals of the CG-4P. If 120VAC is not present (should vary between 0 and 120VAC according to flash rhythm), replace red wire between flasher and lampchanger. If 120VAC is present and lamp is not lit, replace lampchanger.

B. 300mm Lanterns.

1. Notes.

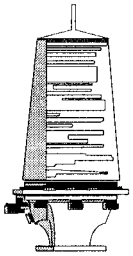

a. The 300mm lantern is used only on stable platforms. This omnidirectional lantern requires precision focusing And leveling to ensure proper operation. The lens is Replaceable and available in clear, yellow, red and green. The lantern can dissipate up to 250 watts, however when operating in a lantern house at maximum load, drill three 1 inch holes in the top to dissipate heat.

2. Safety Warning.

a. **SECURE POWER TO THE AID PRIOR TO INSTALLATION AND SERVICING. CHECK TO BE SURE POWER IS OFF.**

b. Components in these lanterns become very hot when operating. Allow the lantern to cool off before removing lamps, lampchanger, etc., and wear gloves and long sleeves to protect your arms and hands from hot components.

c. These lanterns are powered by 120VAC. Use extreme care when installing, operating, testing, troubleshooting, or performing maintenance work.

3. Installation.

a. Install three (3) threaded rods or bolts on the platform as shown in Figure 2-12. Add the leveling nut and flat washer at this time.

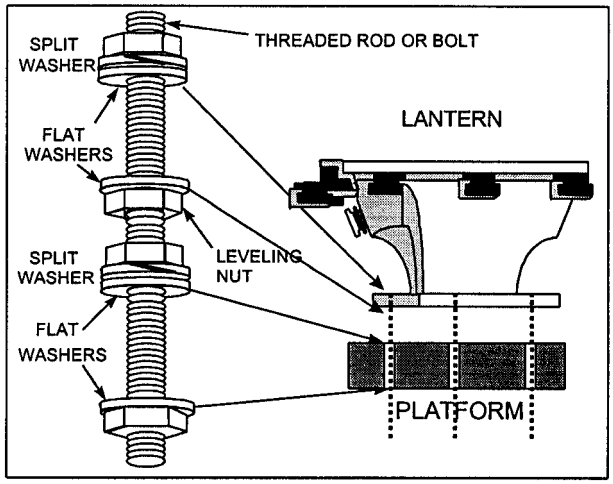

Figure 2-12

b. Position lantern over threaded rods. Place a flat washer, split washer and nut on each rod but do not tighten completely.

c. With lens open, place a level on the flange of the lantern base. **DO NOT USE THE LANTERN BUBBLE LEVELS.**

d. Adjust the leveling nuts up or down until level.

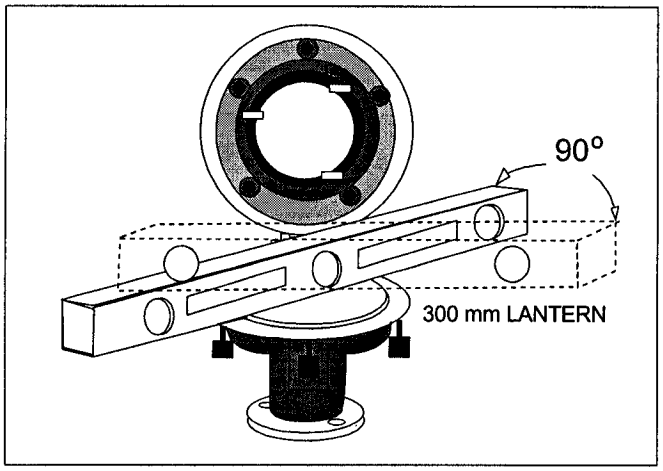

Figure 2-13

e. Move the level ninety (90) degrees from your first position and readjust. See Figure 2-13.

f. Repeat steps until the lantern is level in both positions.

g. Tighten top nuts on leveling bolts and recheck levelness of lantern. DO NOT OVERTIGHTEN.

h. Lanterns burning fixed-on, 24 hours a day use a

CG-4P lampchanger. Lanterns burning fixed and daylight controlled use the Intermatic K4121 photocontrol to turn the light off during daytime. Lanterns with flashed rhythms use the FLAC-300.

i. Attach the mounting bracket to the base of the CG-4P with the screws supplied (most CG4Ps have the bracket already attached). The CG-4P bracket is ~~offset~~ and deeper than the CG-6P bracket and must be used to properly focus the lantern (see Figure 2-14). If the FLAC-300 is used, attach it to the center hole in the bracket with an 8-32x5/16" screw. Attach the 3 short leads supplied with the flasher to the LAMP, MOTOR and NEUTRAL terminals of the CG-4P.

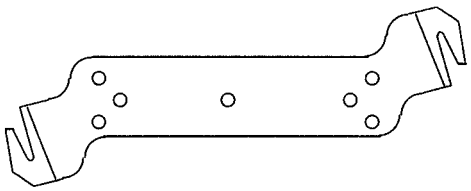

Figure 2-14

Old Style Bracket

j. Install a 250 watt lamp focus fixture into the first position of the lampchanger. The fixture is installed by lining up the bayonet pins with the cooling fins of the turret, and pushing into the socket until it locks in place.

k. Wiring shall be 12/3 SO cable through a watertight stuffing tube, or individually insulated wires installed in conduit (Liquid-Flex near lantern). Wires shall have insulated spring spade lugs and terminated at the "Black" (120VAC), "White" (Neutral) and "Green" (Ground) terminals of the CG-4P lampchanger, as shown in Figure 2-15 for fixed-on, 24 hours a day operation.

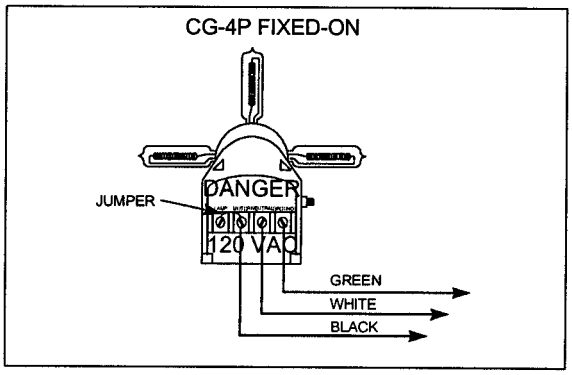

Figure 2-15

l. If the light burns fixed-on and is daylight controlled, install an Intermatic K4121 photocontrol in an unused cable entrance (a 3/4" to 1/2" reducer pipe bushing is needed to install

this device in the lantern) as shown in Figure 2-16. Crimp connectors and 12" of color coded 16-18 AWG wire are necessary to extend the leads of the K4121 photocontrol.

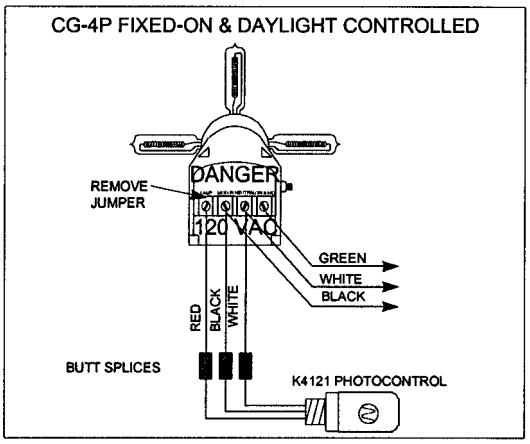

Figure 2-16

m. If flashed, install a FLAC-300 and type-L daylight control, as shown in Figure 2-17.

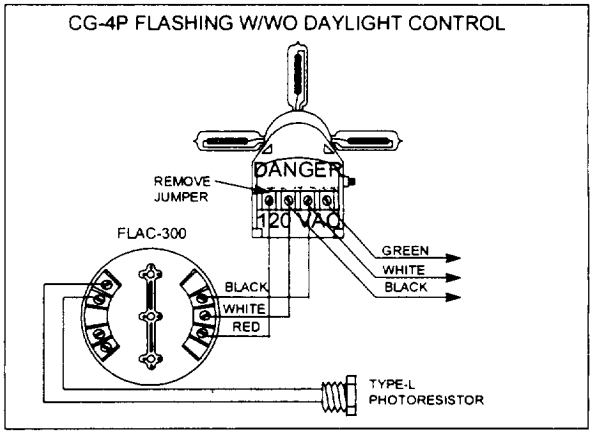

Figure 2-17

See CH-1 COMDTNOTE 16500, encl. (1) paragraph 6. for change.

n. Install the lampchanger/flasher (if used) assembly onto the lower studs on the 300mm tripod. Attach the power cable at this time, through the stuffing tube, up through the tripod to the lampchanger. Insert the tripod assembly into the lantern, aligning the triangular marks on the mounting ring and tripod.

4. Focusing.

a. Loosen each of the lens clamping screws.

b. With lantern open, look into the lens. Rotate the lens until one of the focus screws is aligned with one set of the sighting marks.

c. Secure each of the lens clamping screws.

d. Insert a focus fixture in the lampchanger by lining up the bayonet pins with the cooling fins and pushing into the socket until the fixture locks in place.

e. Secure tripod flasher/lampchanger assembly on lens support ring. HINT: align the triangles on the lens support ring and tripod. Tighten the wing nuts.

f. Tighten focus screws on lens support ring **CLOCKWISE** until tight against the lens base.

g. Turn each focus screw **COUNTER-CLOCKWISE** nine (9) complete revolutions

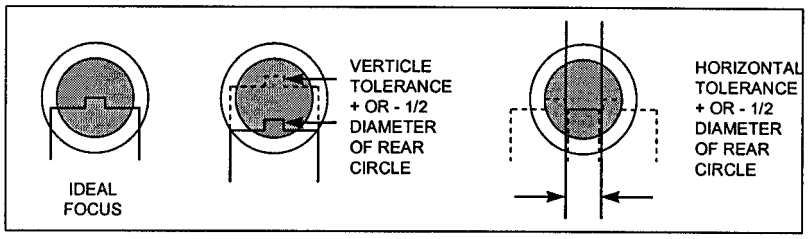

Figure 2-18

h. Sight through the set of sighting marks that is aligned with the focus knob using the *focus prism*.

i. Observe the focus fixture. Is it right or left or low? If so, turn one of the two focus screws not aligned with the sighting marks until the focus fixture is centered. See Figure 2-18.

j. If the focus fixture is above the sighting marks, turn each focus screw two (2) or three (3) more complete turns until it is either below it or right on.

k. Sight through the other set of sighting marks using the focus prism.

l. Observe the focus fixture. Is it right or left or low? If so, turn only the third focus screw until

the focus fixture is centered.

m. Repeat steps until you observe the focus fixture centered under the sighting marks.

n. Finally, turn all focus screws **CLOCKWISE** until the focus fixture is centered in the sighting marks.

o. If unable to focus, check for improper mounting, bent mounting bracket, etc. Then, repeat above procedures.

p. Remove lampchanger/flasher assembly by loosening the three wing nuts.

q. Remove the focus fixture by leaning it away from the frame and pull up. Install four 250W lamps by lining up the bayonet pins with the cooling fins in the turret and push into the socket until the fixture locks in place. Lamps should be installed with the turret in the "X" position so that no lamp compresses the spring contacts. Use a clean rag or the protective wrapper when handling lamps. Advance the lampchanger to the first position and reinstall in the lantern.

5. Maintenance.

a. Secure Power to the lantern.

b. Visually inspect the lens and base for cracks, crazing, holes, etc. Replace if necessary.

c. Loosen the three black knobs securing the lantern ring to the base.

d. Place a level on the base and check levelness in both directions. Correct if not level.

e. Loosen the three wing nuts securing the tripod assembly to the lantern ring.

f. Remove the operating lamp and any burned out lamps by leaning them away from the frame and pulling up. CAUTION - LAMPS MAY BE HOT. Use a clean rag when removing lamps.

g. Install the focus fixture in the lampchanger.

h. Reinstall the lampchanger assembly into the lantern by lining up the triangular marks on the tripod and lantern ring.

i. Check the focus and adjust, if necessary, as described in section 4.

j. Remove the tripod assembly and focus fixture

k. Advance unused lamps to the first positions and install new lamps in the remaining positions, as described in section 4. Use a clean rag or protective wrapper when handling lamps.

l. Place the assembly in the base of the lantern, cover photocontrol or daylight control (note: the K-4121 can have up to a 5 minute delay when switching), turn on power and press the TEST button until the turret advances past the 4th position (lamps form an "X" when complete). Secure power to the lampchanger. Replace the CG-4P if it fails to operate correctly and refocus.

m. Rotate turret to the first position, **press the TEST button to.** CAUTION -LAMPS AND TURRET MAY BE HOT.

n. Install the tripod assembly into the lantern and secure.

o. Close and secure the lens assembly.

p. Clean the lens, if necessary with a soft bristle brush and mild soap and water.

q. Turn on power (light should turn on), remove cover daylight control or photocontrol (note: the K-4121 can take up to a 5 minutes to turn off

light) and check for proper operation.

6. Troubleshooting.

a. Check filament in operating lamp.

Fixed-on, 24 Hours a Day

b. Measure voltage at MOTOR and NEUTRAL terminals of the CG-4P. If 120VAC is not present, problem is with main power. If 120VAC is present and lamp is not lit, replace lampchanger.

Fixed-on, Daylight Controlled

c. Measure voltage at MOTOR and NEUTRAL terminals of the CG-4P. If 120VAC is not present, problem is with main power.

d. Cover daylight control or photocontrol (note: the K-4121 can have up to a 5 minute delay when switching).

e. Measure voltage at LAMP and NEUTRAL terminals of the CG-4P. If 120VAC is not present, replace photocontrol. If 120VAC is present and lamp is not lit, replace lampchanger.

Flashing, Daylight Controlled

f. Measure voltage at MOTOR and NEUTRAL terminals of the CG-4P. If 120VAC is not present, problem is with main power.

g. Measure voltage at MOTOR and NEUTRAL terminals of the FLAC-300. If 120VAC is not present, replace black and white wires between flasher and lampchanger.

h. Cover daylight control. Measure voltage at LAMP and NEUTRAL terminals of the FLAC-300. If 120VAC is not present (should vary between 0 and 120VAC according to flash rhythm), remove daylight control. If 120VAC is present after removing daylight control, replace it. If 120VAC is still not present, repair or replace the FLAC-300. IF REPAIRED, BE SURE THE CORRECT RHYTHM CARD IS INSTALLED.

i. Measure voltage at LAMP and NEUTRAL terminals of the CG-4P. If 120VAC is not present (should vary between 0 and 120VAC according to flash rhythm), replace red wire between flasher and lampchanger. If 120VAC is present and lamp is not lit, replace lampchanger.

3. Classical Lenses

1. Notes.

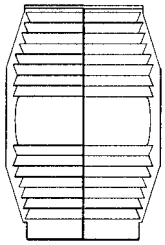

a. Classical lenses are used throughout the Coast Guard as omnidirectional (like the 250mm), directional (like the RL-14) and rotating lights (like the DCB-24). The lenses are rated by orders with 6th order being the smallest and 1st the largest. All lenses typically use either the CG-2P lampchanger with 120VAC, 1000 watt lamps, or the CG-4P lampchanger with 120VAC, 250 watt lamps. This section covers apparatus used inside all lenses. Contact your CEU for specific maintenance requirements for rotating mechanisms.

2. Safety Warning.

a. **SECURE POWER TO THE AID PRIOR TO INSTALLATION AND SERVICING. CHECK TO BE SURE POWER IS OFF.**

b. Components in these beacons become very hot when operating. Allow the beacon to cool off before removing lamps, lampchanger, etc., and wear gloves and long sleeves to protect your arms and hands from hot components.

c. These lenses are made from cut glass. Chipped

or broken edges may be sharp enough to cause lacerations.

d. These beacons are powered by 120VAC. Use extreme care when installing, operating, testing, troubleshooting, or performing maintenance work on these lanterns.

3. Installation.

a. Classical lenses are generally already in place. Replacement is impractical as very few spare lenses exist.

b. Rotating and drum lenses with continuously burning, fixed-on lights will use either the CG-2P lampchanger equipped with 120VAC, 1000 watt lamps, or the CG-4P with 120VAC, 250 watt lamps. Lights that are daylight controlled use an Intermatic K-4121 photocontrol. Flashing lights will use either an ACFC (1000 watt lamps) or a FLAC-300 (250 watt lamps) and a type-L daylight control.

c. Mounts for the lampchanger must be custom made to support it at the proper height in the lens.

d. Wiring shall be 12/3 SO (12/4 if monitored), or individually insulated wires installed in a conduit.

e. Install insulated spring spade lugs on all wire terminations.

CG-2P Installations

f. CG-2P lampchanger installations in classical lenses do not require reflectors mounted to the lampchanger. REMOVE BOTH REFLECTORS.

g. CG-2P installations shall have the spare lamp facing the least critical area of coverage (usually shore) as there will be reduced intensity in this direction.

h. Continuous fixed burning and flashing installations shall be terminated at terminals "A" (120VAC), "B" (Neutral, jumper between "B" & "C") and the lampchanger's base (Ground) from a disconnect or ACFC.

i. Nighttime fixed burning lights may be controlled by an Intermatic K-4121 photocontrol mounted away from the lens to prevent light from the lamp affecting its operation. The photocontrol can be installed in a small enclosure and wired to a terminal strip as shown in Figure 2-19. Alternately, daylight controlled fixed and flashing lights can be operated by an AC Flash Controller.

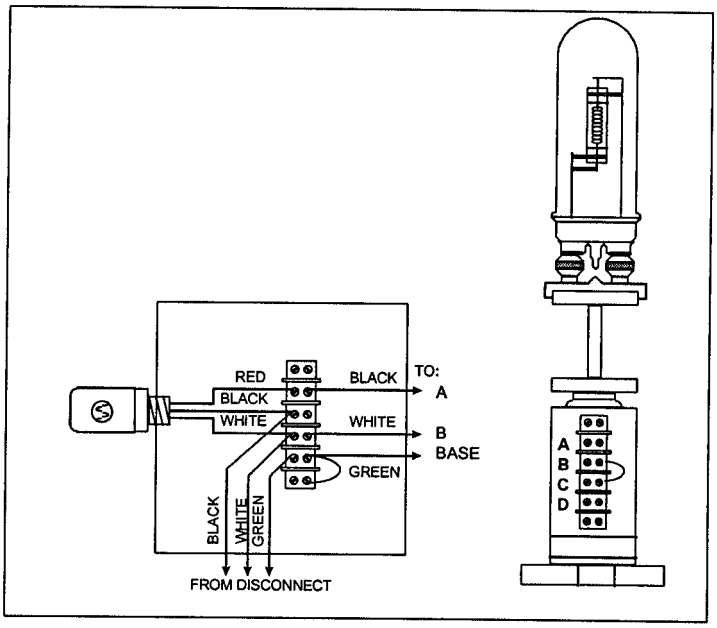

Figure 2-19

CG-4P Installations

j. Classical lenses with CG-4P lampchangers and continuous fixed burning lights (24 hours a day) shall have insulated spring spade lugs and terminated at the "Black" (120VAC), "White" (Neutral) and "Green" (Ground) terminals of the CG-4P lampchanger, as shown in Figure 2-20.

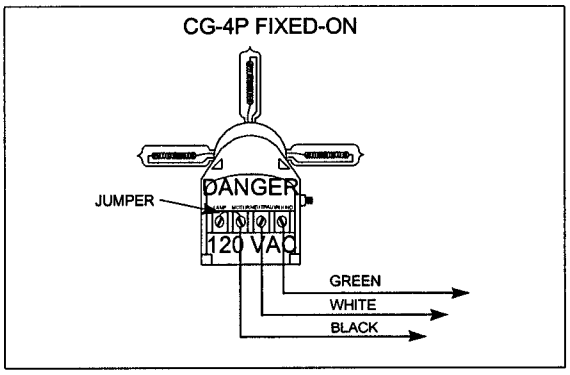

Figure 2-20

k. If the light burns fixed-on and is daylight controlled use an Intermatic photocontrol, as shown in Figure 2-21. Leads must be extended and photocontrol must face away from lens or light from lamp will affect its operation.

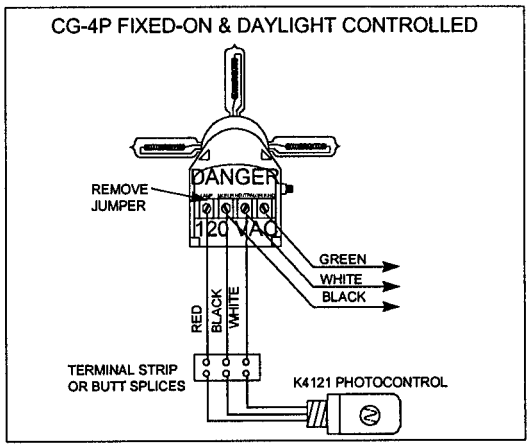

Figure 2-21

1. If flashed, install a FLAC-300 and type-L daylight control, as shown in Figure 2-22.

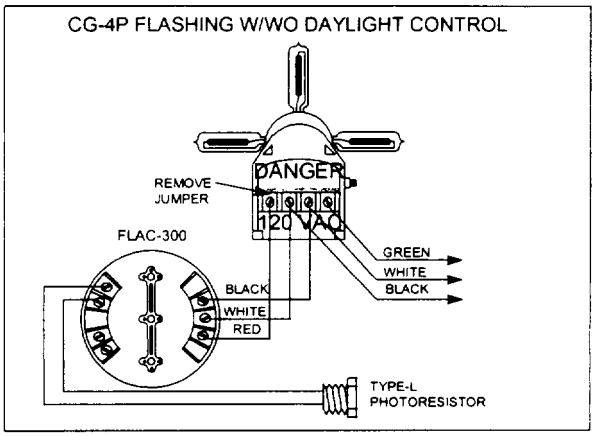

Figure 2-22

See CH-1 COMDTNOTE 16500, encl. (1) paragraph 6. for change.

4. Focussing. (Both Lampchangers)

a. Install a focus fixture in the operating position of the lampchanger.

b. Measure the distance from a base, common to both the lampchanger and the lens, to the center of the drum lens (largest glass element in the center of the lens) or bulls eye. See Figure 2-23

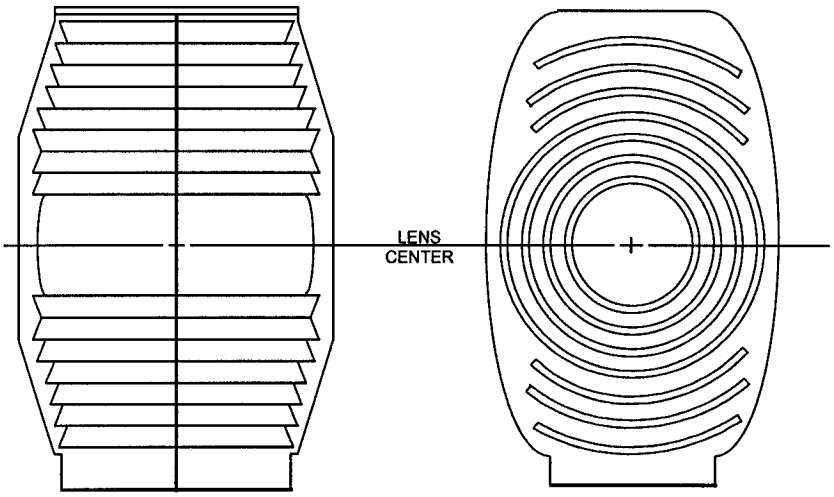

Figure 2-23

c. Adjust the lampchanger up or down so that the tip of the focus fixture is the same distance from the base as the lens center is to the base.

d. Using a flexible tape ruler, measure the inside diameter of the drum lens.

e. Measure the distance from inside the drum lens to the tip of the focus fixture. It should be one-half the diameter of the lens. Repeat this measurement at four places (90 degree intervals) around the lens. Adjust the lampchanger so that all four measurements are equal.

f. Remove the focus fixture and install the lamp.

g. Turn on the power, momentarily cover the daylight control or photocontrol (note: the K-4121 can have up to a 5 minute delay when switching) and check for proper operation.

5. Maintenance.

CG-2P Lampchanger

a. Secure power to the lantern and allow the lamp and lampchanger to cool (if operating). Note if the lampchanger is in the secondary position by the word "TRIPPED" on the end of the lampholder opposite the terminal strip. If tripped, both lamps will be replaced. If the primary lamp is out and the lampchanger did not advance to the secondary position, replace the lampchanger.

b. Wearing gloves, loosen the knurled collar

securing the lamp in the secondary position and remove the lamp by pulling straight up (set aside if the lampchanger was not tripped). Access the other lamp by either rotating the lampholder or pulling up on the "trip" lever. Remove the lamp and discard.

c. Install 2 new lamps in the lampchanger (or the secondary lamp in the operating position, if unused). Seat each lamp fully in the collets and tighten the fixed, knurled collar first, then the loose collar. This will prevent lamp breakage. Rotate the lampholder so the primary lamp (so the word "TRIPPED" is over the terminal strip) into the operating position. Lift the lever beside the lampchanger, advancing the lamp. The lampchanger should rotate and lock into position. If not, adjust the spring tension on the lampchanger by loosening the 3 Allen screws beneath the large knurled collar and turn the collar counter clockwise to increase tension. Turn the collar enough to cause the lampholder to lock in place when tripped. Too much tension could cause the lamp filament to break, causing a discrepancy. Retest, then secure power and rotate the lampholder to the primary position.

d. Clean the lens elements at this time with mild soap and water if necessary. Loose elements should be secured with glazing compound. Turn power back on, momentarily cover the daylight

control or photocontrol (note: the K-4121 can have up to a 5 minute delay when switching) and check to see if the lamp is turns on.

CG-4P Lampchanger

e. Secure power to the beacon.

f. Open the access door in the lens. Allow the lamp to cool if it was operating.

g. Wear gloves or using a soft cloth, remove the lamp in the operating position by leaning it away from the frame to free it from the turret and pull out. Remove and discard any burned out lamps at this time.

h. Lamp installation is recommended with the turret rotated (X position) so that no lamp compresses the spring contacts. Rotate unused lamps into operating position. Install each lamp by pushing into the turret until it snaps into place. Used a clean cloth or the protective wrapper supplied with each lamp to avoid getting fingerprints on the lamp.

i. Rotate the lampchanger to the first position (red paint on turret), apply power to the beacon, cover daylight control or photocontrol (note: the K-4121 can have up to a 5 minute delay when switching) and press the TEST button on the

side of the lampchanger. The turret should advance to the next operating position.

j. Secure power to the lampchanger, allow to cool and rotate the turret to the first position. CAUTION - THE LAMPS AND TURRET MAY BE HOT!

k. Clean the lens elements at this time with mild soap and water, if necessary. Loose elements should be secured with glazing compound. Turn power back on, momentarily cover the daylight control or photocontrol (note: the K-4121 can have up to a 5 minute delay when switching) and check to see if the lamp is turns on.

6. Troubleshooting.

a. Check filament in operating lamp.

CG-2P - Fixed-on, 24 Hours a Day

b. Measure voltage at A & B terminals of the CG-2P. If 120VAC is not present, problem is with main power. If 120VAC is present and lamp is not lit, replace lampchanger.

CG-2P - Fixed-on, Daylight Controlled

c. Measure voltage at Black and White leads on input terminal strip to K-4121 photocontrol. If

120VAC is not present, problem is with main power.

d. Cover photocontrol (note: the K-4121 can have up to a 5 minute delay when switching).

e. Measure voltage at Red and White leads on input terminal strip to K-4121 photocontrol. If 120VAC is not present, replace photocontrol.

f. Measure voltage at A & B terminals of the CG-2P. 120VAC is not present, replace wiring between photocontrol terminal strip and lampchanger. If 120VAC is present and lamp does not light, replace lampchanger.

CG-2P - Flashing, Daylight Controlled

g. Measure voltage at A & B terminals of the CG-2P. If 120 VAC (should vary between 0 and 120VAC according to flash rhythm) is not present, troubleshoot the ACFC (chapter 7). If 120VAC is present and lamp does not light, replace lampchanger.

CG-4P - Fixed-on, 24 Hours a Day

h. Measure voltage at MOTOR and NEUTRAL terminals of the CG-4P. If 120VAC is not present, problem is with main power. If 120VAC is present and lamp is not lit, replace lampchanger.

CG-4P - Fixed-on, Daylight Controlled

i. Measure voltage at MOTOR and NEUTRAL terminals of the CG-4P. If 120VAC is not present, problem is with main power.

j. Cover daylight control or photocontrol (note: the K-4121 can have up to a 5 minute delay when switching).

k. Measure voltage at LAMP and NEUTRAL terminals of the CG-4P. If 120VAC is not present, replace photocontrol. If 120VAC is present and lamp is not lit, replace lampchanger.

CG-4P - Flashing, Daylight Controlled

l. Measure voltage at MOTOR and NEUTRAL terminals of the CG-4P. If 120VAC is not present, problem is with main power.

m. Measure voltage at MOTOR and NEUTRAL

terminals of the FLAC-300. If 120VAC is not present, replace black and white wires between flasher and lampchanger.

n. Measure voltage at LAMP and NEUTRAL terminals of the FLAC-300. If 120VAC is not present (should vary between 0 and 120VAC according to flash rhythm), repair or replace FLAC-300.

o. Measure voltage at LAMP and NEUTRAL terminals of the CG-4P. If 120VAC is not present (should vary between 0 and 120VAC according to flash rhythm), replace red wire between flasher and lampchanger. If 120VAC is present and lamp is not lit, replace lampchanger.

CHAPTER 3. ROTATING BEACONS

A. FA-251-AC

1. Notes.

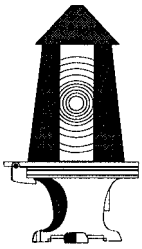

a. The FA-251-AC is a 190mm rotating beacon, similar in appearance to the obsolete Amerace-ESNA 2130 190mm beacon. It uses the CG-4P lampchanger with 120 VAC, 150 watt tungsten-halogen lamps and a Hurst synchronous motor in the drive mechanism. No flasher is used in this beacon. The daylight control function, if equipped, is performed by an external Intermatic photocontrol.

b. Replacement motors are available directly from Hurst Manufacturing Division, Emerson Electric Company; replacement parts are available from Automatic Power Inc. (API). The only parts that are interchangeable between the FA-251-AC and the Amerace 2130 are the lens panels. All parts must be ordered from API.

c. This lantern is used only on structures not subjected to noticeable vibrations (i.e., lighthouses, dolphin type structures, steel stuctures).

2. Safety Warning.

a. **SECURE POWER TO THE AID PRIOR TO INSTALLATION AND SERVICING. CHECK TO BE SURE POWER IS OFF.**

b. Components in these beacons become very hot when operating. Allow the beacon to cool off before removing lamps, lampchanger, etc., and wear gloves and long sleeves to protect your arms and hands from hot components.

c. These beacons are powered by 120 VAC. Use extreme care when installing, operating, testing, troubleshooting, or performing maintenance work on these lanterns.

3. Installation.

a. Install three (3) threaded rods or bolts on the platform as shown in Figure 3-1 (only three of the four holes in the base are used). Add the leveling nut and flat washer at this time.

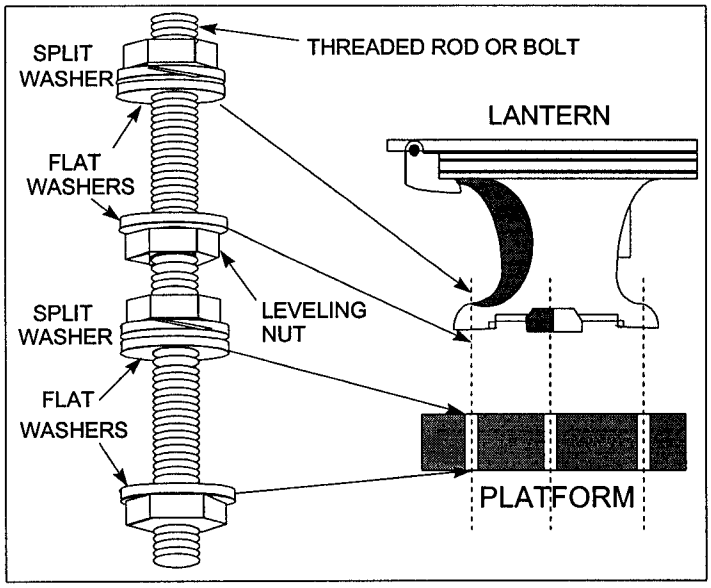

Figure 3-1

b. Position lantern legs over leveling bolts.

c. Place a top washer, split washer and nut on each bolt. **Do not tighten completely.**

d. With lens open, place a level on the flange of the lantern base. **The bubble level on the lantern shall not be used.** See Figure 3-2.

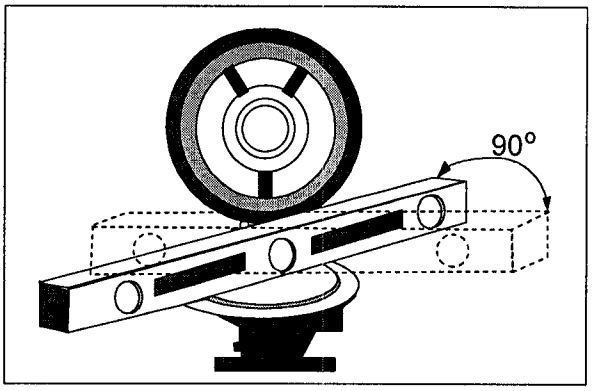

Figure 3-2

e. Adjust the leveling nuts up or down until level.

f. Move the level ninety (90) degrees from your first position and readjust.

g. Repeat the steps until the lantern is level in both positions.

h. Tighten top nuts on leveling bolts enough to compress the split washer. DO NOT OVERTIGHTEN.

i. Recheck the levelness of the lantern.

j. The CG4P lampchanger is used in this beacon with 120 VAC, 150 watt tungsten halogen lamps. The 250 watt lamp are not used as they may interfere with the lens panels during operation.

k. Daylight control of the light is accomplished by an Intermatic K4121 photocell. Leave the jumper between the LAMP and MOTOR terminals in place on the CG-4P.

l. Remove the bracket supplied with the CG4P and attached the FA-251-AC's mounting bracket with the supplied screws.

m. Be sure power is secured. Slide stuffing tube housing, washer and rubber grommet over lugged end of power cable.

n. Slide power cable into the lantern through the stuffing tube with enough slack to connect to the terminal strip in the base of the lantern.

o. Attach the Red, White and Green wires between the CG-4P lampchanger and the terminal strip attached to the lantern ring, as shown in Figure 3-3.

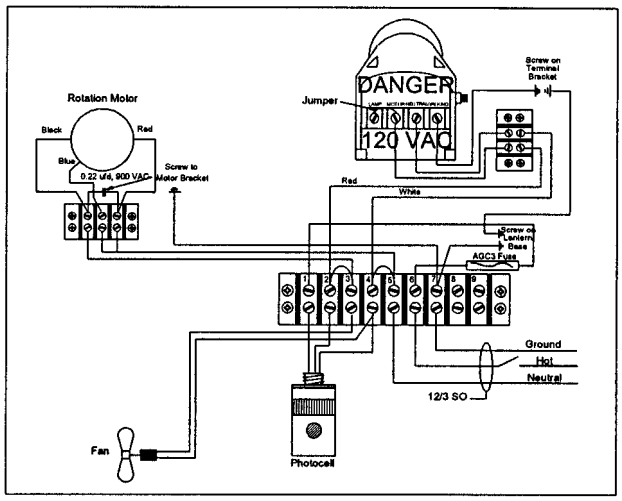

Figure 3-3

p. Slide the stuffing tube grommet, washers and cap up to the stuffing tube body and secure.

q. Install a 150 watt focus fixture (available from COMDT (G-SEC-2)) in the lampchanger and install the assembly in the lantern. The fixture is installed by lining up the bayonet pins with the cooling fins of the turret, and pushing into the socket until it locks in place.

Figure 3-3, cross out the jumper on the small terminal strip connected to the rotation motor, and add the notation "(without heat switch)", as shown below:

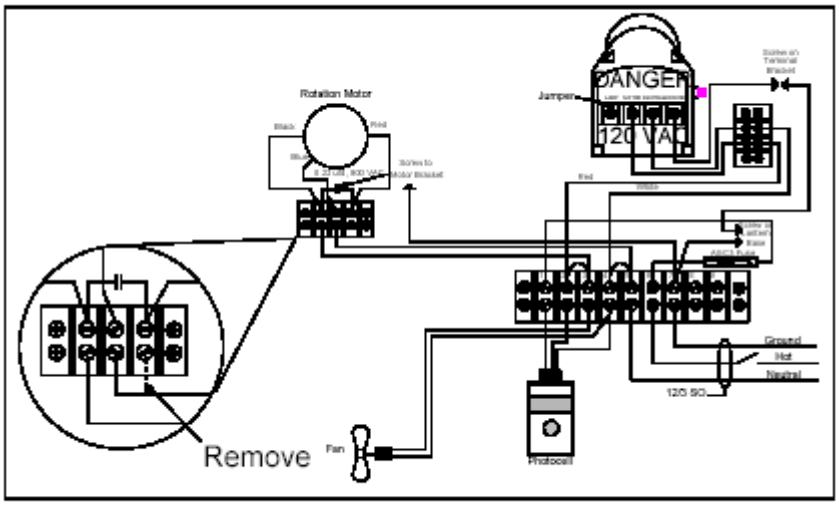

Figure 3-3 (without heat switch)

p. Slide the stuffing tube grommet, washers and cap up to the stuffing tube body and secure.

q. Install a 150 watt focus fixture (available from COMDT (G-SEC-2)) in the lampchanger and install the assembly in the lantern. The fixture is installed by lining up the bayonet pins with the cooling fins of the turret, and pushing into the socket until it locks in place.

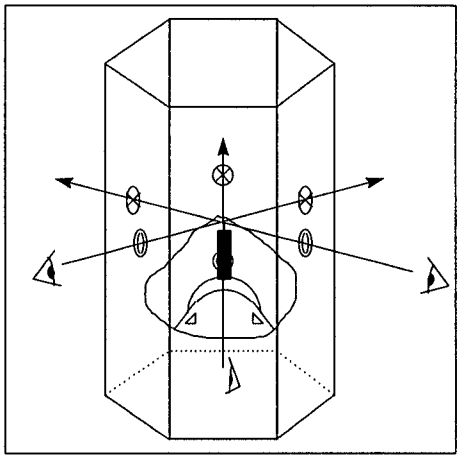

Figure 3-4

e. Remove lampchanger/flasher assembly by loosening the three wing nuts. DO NOT TURN THE "D" RINGS ON THE BRACKET.

f. Remove the focus fixture by leaning it away from the frame and pull up. Install four 150W lamps by lining up the bayonet pins with the cooling fins in the turret and push into the socket until the fixture locks in place. Lamps should be installed with the turret in the "X" position so that no lamp compresses the spring contacts. Use a clean

rag or the protective wrapper when handling lamps. Advance the lampchanger to the first position and reinstall in the lantern.

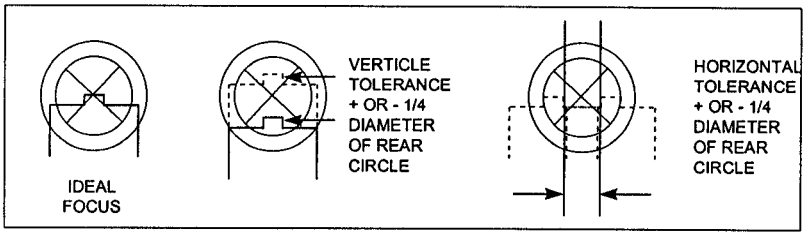

Figure 3-5

g. Close lantern, turn on power and check for proper operation.

5. Maintenance.

a. Secure power to the beacon and allow to cool if light was operational.

b. Visually inspect the lens and base for cracks, crazing, holes, etc. Replace if necessary.

c. Open lantern by loosening four screws on base below lantern ring. Swing lens open against stops.

d. Place a level on the base and check levelness in both directions. Correct if not level.

e. Remove lampchanger/flasher assembly by loosening the three wing nuts. DO NOT TURN THE "D" RINGS ON THE BRACKET.

f. Remove the operating lamp and any burned out lamps by leaning them away from the frame and pulling up. CAUTION - LAMPS MAY BE HOT. Use a clean rag when removing lamps.

g. Install the appropriate focus fixture in the lantern.

h. Reinstall the lampchanger assembly onto the lantern arms, over the spacers and secure.

i. Check the focus and adjust, if necessary, as described in section 4.

j. Remove the lampchanger assembly from the lantern.

k. Advance unused lamps to the first positions and install new lamps in the remaining positions, as described in section 4. Use a clean rag or protective wrapper when handling lamps.

l. Place the assembly in the base of the lantern (be careful of terminal strip), cover photocontrol or daylight control (note: K-4121 can take up to 5 minutes to switch) turn on power and press the TEST button until the turret advances past the 4th position (lamps form an "X" when complete). Secure power to the lampchanger. Replace the CG-4P if it fails to operate correctly and refocus.

m. Rotate turret to the first position. CAUTION - LAMPS AND TURRET MAY BE HOT.

n. Install the lampchanger assembly as described above.

o. Close and secure the lens assembly.

p. Clean the lens cover, if necessary with a <u>soft</u> bristle brush and mild soap and water.

q. Turn on power (light should turn on), verify rotation speed is within 6% (correct number of revolutions in 56 to 64 seconds), remove cover on daylight control or photocontrol (note: K-4121 can take up to 5 minutes to turn off light) and check for proper operation.

r. Replace air filter under rain hood with a FRAM CA140PL or equivalent.

s. Be sure fan and rotation motor operate continuously.

6. Troubleshooting.

a. Check filament in operating lamp.

24 Hours a Day Operation

b. Measure voltage at MOTOR and NEUTRAL terminals of the CG-4P. If 120VAC is not present, problem is with main power (or in-line fuse located in base). If 120VAC is present and lamp is not lit, replace lampchanger.

Daylight Controlled

c. Measure voltage at MOTOR and NEUTRAL terminals of the CG-4P. If 120VAC is not present, problem is with main power (or in-line

fuse located in base).

d. Cover photocontrol (note: the K-4121 can have up to a 5 minute delay when switching).

e. Measure voltage at LAMP and NEUTRAL terminals of the CG-4P. If 120VAC is not present, replace photocontrol. If 120VAC is present and lamp is not lit, replace lampchanger.

Motor

f. If 120VAC is present between the Black and Blue wires at the terminal strip under the rain hood and the motor does not turn (check for binding in lens cage), then replace motor.

B. DCB24 and DCB224 Rotating Beacons.

1. Notes.

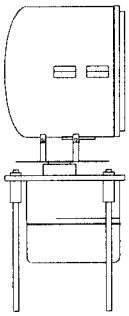

a. The DCB24 and DCB224 are the Coast Guard's standard rotating landfall light signals. The DCB24 is a single drum beacon and the DCB224 has dual drums. The beam color can be white, red or green when using the Appropriate colored coverglass or lantern panes. The DCB24 & DCB224 use a CG-2P 120VAC, 1000 watt lampchanger. Additional information can be obtained from the 24 inch Rotating Beacon instruction book included with each optic.

2. Safety Warning.

a. **SECURE POWER TO THE AID PRIOR TO INSTALLATION AND SERVICING. CHECK TO BE SURE POWER IS OFF**

b. Components in these beacons become very hot when operating. Allow the beacon to cool off for 15 minutes before opening. Wear a face shield or goggles when handling lamps, and gloves and long sleeves to protect your arms and hands from hot components.

c. There is no slip clutch in the drive mechanism.

Be careful not to get caught between any rotating and non-rotating parts.

d. These beacons are powered by 120VAC. Use extreme care when installing, operating, testing, troubleshooting, or performing maintenance work on these beacons.

3. Installation.

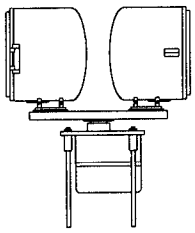

a. The net weight of the beacons unpacked are 330 and 470 pounds for the DCB24 and DCB224, respectively. Therefore, weight handling equipment will be needed at the Aid to facilitate installation. Disassembly of the drum(s) from the base may be necessary to maneuver the beacon into position. The lantern must be installed on a stable platform to ensure that accurate aim is maintained. The beacon is top-heavy and may tip over until it is permanently installed. Use extreme caution when maneuvering the beacon into place. The lantern is secured to the platform using 3/4" capscrews as shown in Figure 3-5. Use the hardware (bolts, flat washers and lock washers) that secured the beacon to the shipping crate.

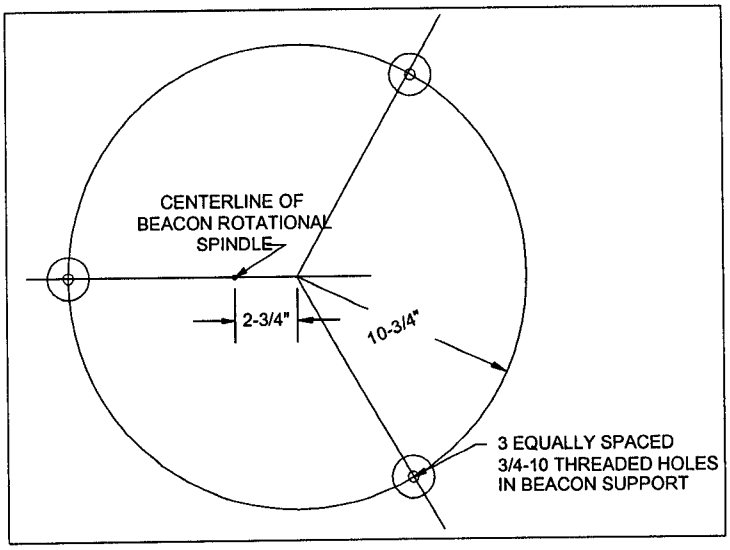

Figure 3-5

b. If installing a DCB-224, position the drums as directed by district (oan) or the CEU to obtain the proper group flash or least resistance to wind loading.

c. Place a torpedo level on top of the beacon base (point where legs attach to beacon). Loosen the top nut on each leg and adjust the lower nut until the beacon is level. Turn the torpedo level 90 degrees frequently to ensure that the beacon is level in both directions. Tighten the top nuts

when completed.

d. DCB beacons typically operate fixed-on, 24 hours a day. Unmonitored beacons can be wired through a service disconnect or if daylight controlled, an AC Flash controller (using a Fixed rhythm flasher). Beacons monitored by ACMS use an Audio Visual Controller.

e. Wiring shall be 12 AWG minimum for the lamp and motor circuits and 14 AWG for the rotation detector and lampchanger position (if monitored). Wires shall have insulated spring spade lugs and terminated as shown in figure 3-6.

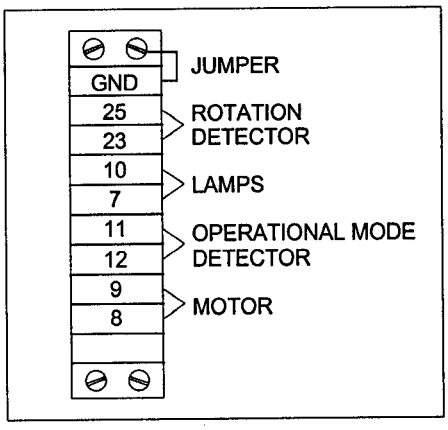

Figure 3-6

f. For lamp installation, see section 4.

4. Focusing.

a. If the lampchanger is removed for any reason, the focus must be checked to ensure proper operation. NOTE: BE SURE POWER IS TURNED OFF DURING FOCUSING.

b. Install at least 4 elastic cord assemblies (Figure 3-7) on the clips securing the large glass mirror in the lantern. Use opposite located clips for each cord assembly. The cords should cross at one point (snap to prevent binding). Remove both spherical reflectors from the lampchanger. Rotate the lampchanger turret to obtain access to the rear reflector by raising the trip lever (if in primary position), or rotating to the primary position (if tripped).

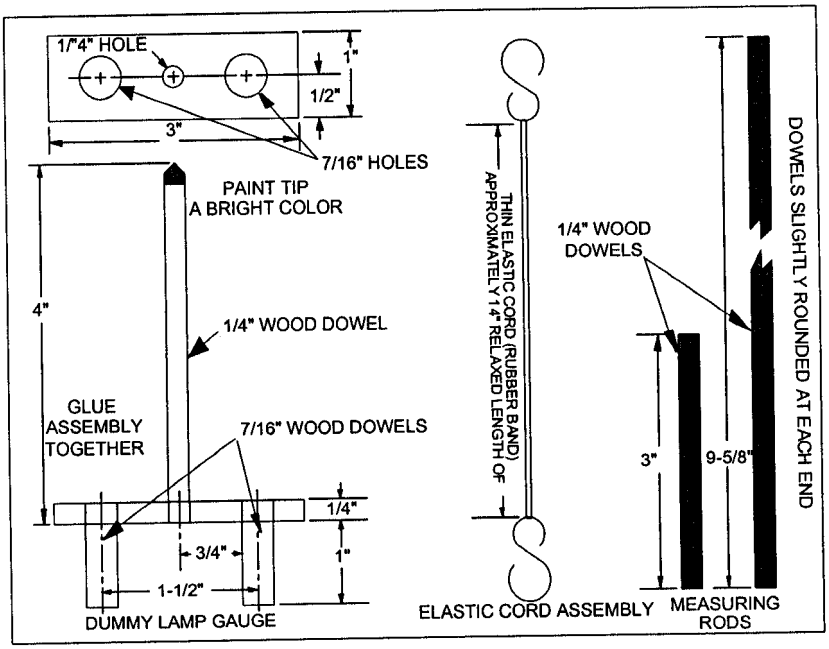

Figure 3-7

c. Using the reflection of your eye in the large mirror, look directly into the beacon until the reflected image of the elastic cords are over their reflection. The reflected center of your eye should now be at the center of the mirror, as shown in Figure 3-8. Mark this point on the

mirror with a grease pencil (newer mirrors have a hole at the center).

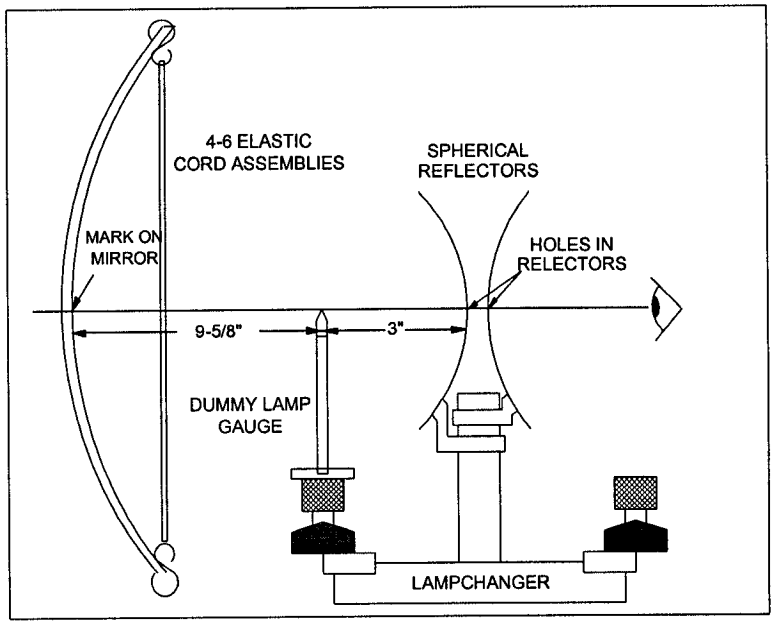

Figure 3-8

d. Install the dummy lamp gauge in the operating lamp sockets (closest to mirror). Position the lampchanger so that the tip of the dummy gage to the mirror is 9-5/8" using the long measuring rod. Next, using the same image reflections

described above, move the lampchanger side-to-side or up-and-down) so that the dummy lamp tip and its reflection line up at the point marked on the mirror. Recheck the distance to the mirror (9-5/8"). If adjustments at the base do not obtain proper placement of the lampchanger, adjustments to the bipost lamp sockets may be necessary.

e. Install only the spherical reflector in the position of the operating lamp. Sight through the center of the reflector and align it until the mark on the mirror, intersection of the elastic cords, dummy lamp gauge and the holes in the spherical reflector are lined up (Figure 3-8). The distance from the spherical reflector in the operating position to the tip of the dummy lamp gauge should be 3" (use 3" measuring tool to check). Align as necessary then tighten fasteners securing the reflector.

f. Install remaining spherical reflector. Remove the dummy lamp gauge and install in the spare lamp position. Rotate the turret so that it is in the operating position (facing the large mirror) and sight through the spherical reflectors. Adjust only the spherical reflector IN THE OPERATING POSITION until the images are lined up. Use the 3" measuring tool to check the distance to the dummy lamp gauge, then tighten fasteners securing the spherical reflector.

g. Wearing gloves, install 2 new 1000 watt lamps in the lampchanger.

h. Seat each lamp fully in the collets and tighten the fixed knurled collar first, then the loose collar. This will prevent lamp breakage.

i. Rotate the lampchanger so the primary lamp is in the operating position (the word "TRIPPED" will not be visible).

j. Apply power to the lantern and press the test button beneath the drum (older beacons do not have this feature). The lampchanger should rotate, lock into position and light the secondary lamp.

k. Secure power and rewind the lampchanger to the primary position.

l. Reapply power and check for proper operation.

5. Semiannual Maintenance.

a. Verify that the rotation speed in within 6% (correct number of revolutions in 56 to 64 seconds) of rated RPM.

b. Verify that the motor current is less than rating on nameplate with light wind loading.

c. Verify that the beacon continues to rotate when the daylight control commands the light(s) to be off (if equipped).

d. Secure Power to the light. Turn off power to the beacon at the disconnect near the base of the beacon. DO NOT GET HIT BY THE SWINGING ARM SUPPORTING THE DRUM(S).

e. Check the oil level in the speed reducer by positioning the access panel over the fill cup. Use the service disconnect to position the access over the cup. BE CAREFUL NOT TO GET YOUR HAND CAUGHT BETWEEN THE FILL CUP AND THE COVER PLATE AND TO NOT GET HIT BY THE SWINGING ARM SUPPORTING THE DRUM(S). If necessary, fill with Winsmith 51-000 synthetic gear lube, or equivalent. Do not overfill.

f. Apply silicon grease (Dow Corning #33) to the spindle bearing grease fitting until grease comes out of the relief hole.

g. Note if the lampchanger is in the secondary position by the word "TRIPPED" on the end of the lampholder. If tripped, both lamps will be replaced.

h. Wearing gloves, goggles or faceshield, open the

door, loosen the knurled collar securing the lamp closest to you and remove the lamp by pulling straight up (set aside if the lampchanger was not tripped). Access the other lamp by either rotating the lampholder or pulling up on the "trip" lever. Remove the lamp and discard. Clean the spherical reflectors on the lampchanger, the mirror and cover window at this time with mild soap and water.

i. Check the focus of the lantern by installing the focus fixture (see figure 3-8) in the operating position of the lampchanger (closest to mirror).

j. Use the long measuring rod, be sure that the distance from the tip of the focus fixture to the center of the mirror is 9-5/8" and that the rod is level (hold level to rod).

k. If this measurement is not within 9-5/8 +/- 1/16, go to section 4 and focus the lantern.

l. Wearing gloves, install 2 new lamps in the lampchanger (or the secondary lamp in the operating position, if unused).

m. Seat each lamp fully in the collets and tighten the fixed knurled collar first, then the loose collar. This will prevent lamp breakage.

n. Rotate the lampchanger so that the primary lamp

is in the operating position (the word "TRIPPED" will not be visible).

o. Apply power to the lantern and press the test button beneath the drum (older beacons do not have this feature). The lampchanger should rotate, lock into position and light the secondary lamp.

p. If the lampchanger does not lock into position, secure power to the lantern, adjust the spring tension on the lampchanger by loosening the 3 Allen screws beneath the large knurled collar (one screw is facing the mirror) and turn the collar counter clockwise to increase tension. Turn the collar enough to cause the lampchanger to lock in place when tripped. Too much tension could cause the lamp filament to break, causing a discrepancy.

q. Retest, then secure power and rotate the lampchanger to the primary position.

r. Close door and tighten the swing clamps evenly to properly seat the door gasket. Turn power back on and reset the AVC, if equipped. Momentarily cover the daylight control (if equipped) and check to see if the lamp(s) turn on.

6. Annual Maintenance.

a. Secure power to the light(s) and rotation motor.

b. Place a torpedo level on the base plate (point where legs attach). Level the beacon, as described in section 3, if necessary.

c. Verify that the mirror is not cracked or tarnished. Replace is necessary, as described in the 24 Inch Rotating Beacon Instruction Book.

d. Check the coverglass and replace if broken or cloudy, as described in the 24 Inch Rotating Beacon Instruction Book.

e. Replace oil in the speed reducer by removing both drain caps, one near the motor, the other along the main shaft centerline and the fill cap. Dispose of the oil in accordance with COMDTINST M16478.1B, Hazardous Waste Management Manual. Replace with Winsmith 51-000 synthetic gear oil, or equivalent. Do not overfill.

g. Clean sliprings with a dry cloth or 4/0 sandpaper if pitted.

h. Verify the spring brush tension is 1 to 1-1/2 pounds.

i. Check wires and connections for looseness, fraying, corrosion or deterioration.

j. Reapply power, check for leaks, cover daylight control (if equipped) and check for proper operation.

7. Troubleshooting.

a. Troubleshooting is limited to checking to see if 120VAC power is applied to the lampchanger and motor and that the lampchanger operates properly (see section 5).

b. Tripping of the circuit breaker controlling the drive motor may be due to a faulty motor or excessive drag in the gear box. Current measurements of the motor operating the beacon and removed from the gearbox can be used to locate the problem. Failure to maintain the proper oil level in the speed reducer and failure to keep the spindle bearing greased can cause this type of failure.

c. Oil leaks should be addressed if they are severe. An occasional droplet, even onto the sliprings, is not considered severe. If tightening fittings, fasteners, resealing fasteners, etc., does not stop the leak, then Repair Kit 5223X available from the manufacturer should be installed. If oil

lines are leaking, and tightening will not stop the leak, contact the manufacturer with the beacon serial number to obtain a flexible oil line kit.

CHAPTER 4. RANGE LIGHTS

A. **14 Inch Range Light (RL-14)**.

1. Notes.

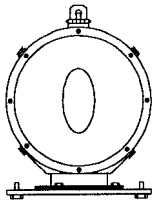

a. The RL-14 is a 14 inch range light. The beam color can be white, yellow, red or green when using the appropriate colored coverglass or spreadlenses. The RL-14 uses a CG-4P 120VAC, 250 watt lampchanger (in addition to the 12 volt system). Two versions of the RL-14 are currently installed in the field: the Tideland Signal RL355 and the Carlisle & Finch RL10668; the latter is considered the Coast Guard standard 14 inch range light. Parts between these beacons are not interchangeable. Additional information can be obtained from the instruction book included with the lantern.

2. Safety Warning.

a. **SECURE POWER TO THE AID PRIOR TO INSTALLATION AND SERVICING.**

b. Components in these beacons become very hot when operating. Allow the beacon to cool off before removing lamps, lampchanger, etc., and wear gloves and long sleeves to protect your arms and hands from hot components.

c. These beacons are powered by 120VAC. Use extreme care when installing, operating, testing, troubleshooting, or performing maintenance work on these lanterns.

3. Installation.

a. The lantern must be installed on a stable platform to ensure that accurate aim is maintained.

b. Secure the lantern to the platform using 3/8" bolts as shown in Figure 4-1.

c. Leveling bushings are provided in the base to assist in leveling the lantern. Use the spirit levels on top of the beacon to determine if the lantern is level.

d. The drum is attached to the base in a manner that allows the beacon to be aimed regardless of the position of the base.

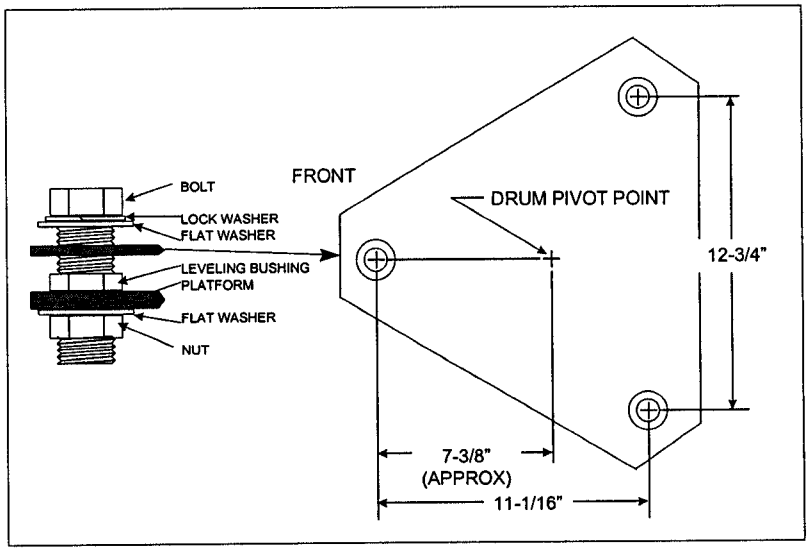

Figure 4-1

e. Wiring shall be 12/3 SO cable through a watertight stuffing tube, or individually insulated wires installed in conduit (Liquid-Flex near lantern). Pull enough slack through the lantern to attach to the lampchanger.

f. Install insulated spring spade lugs and terminate at the "Black" (120VAC), "White" (Neutral) and "Green" (Ground) terminals of the CG-4P

lampchanger, as shown in Figure 4-2. This setup will allow the light to operate fixed on, 24 hours a day.

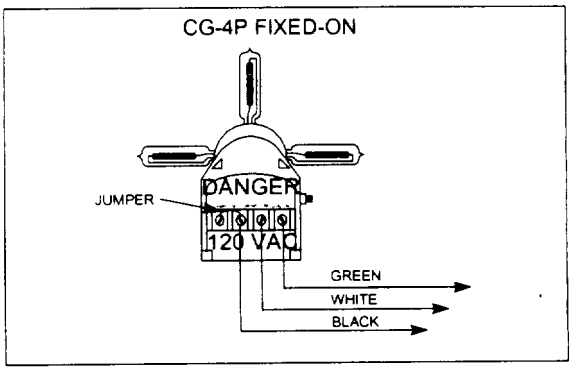

Figure 4-2

g. To daylight control the light, install an Intermatic K4121 photocontrol in an unused cable entrance (the step-down bushing included in the installation kit will be needed) and wire as shown in Figure 4-3.

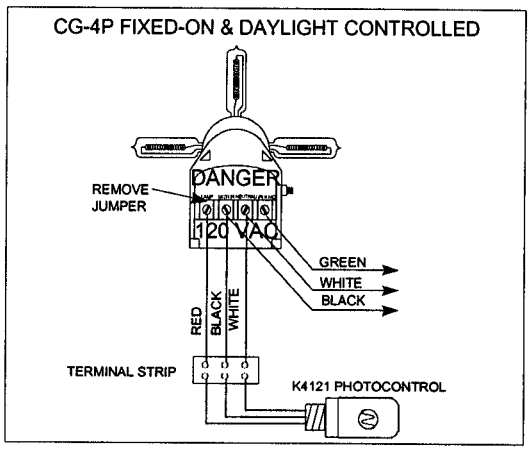

Figure 4-3

h. If flashed, a FLAC-300 and type-L daylight control will be used and wired as shown in Figure 4-4.

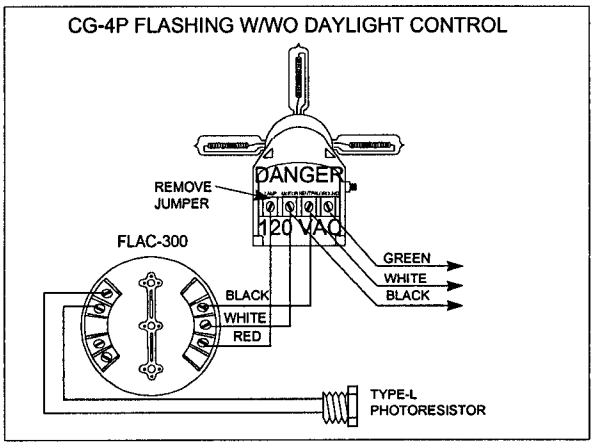

Figure 4-4

See CH-1 COMDTNOTE 16500, encl. (1) paragraph 6. for change.

i. When used as a day or night range light, power is supplied through a RSB-AC (see Chapter 7).

j. Attach the lantern mounting bracket to the base of the CG-4P with the screws supplied so that the lampchanger fits into the "well" (marked CG-4P) on the bracket, as shown in figure 4-5. If the FLAC-300 is used, attach it to the center hole in the bracket with an 8-32x5/16" screw.

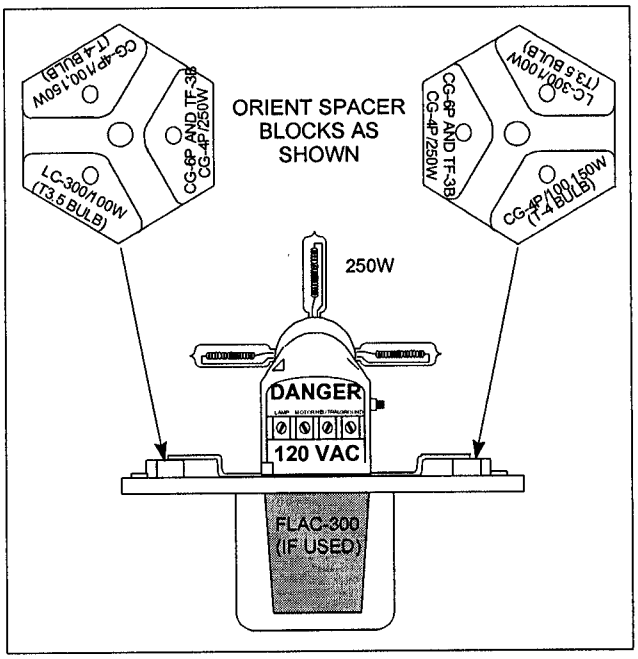

Figure 4-5

k. Determine which lamps will be used in the lantern. 120 VAC, 100W and 150W lamps are different in size than 120VAC, 250W lamps and require different spacer settings in the lantern. Rotate the spacer block in the drum of the lantern to the correct lampchanger/lamp

combination, as shown in Figure 4-5. Loosen the mounting screw and rotate the block until the selected surface aligns with the threaded hole in the back wall. Gently tighten the mounting screw.

l. **Be sure wiring is attached to the lampchanger and power is OFF.** Grasp the lampchanger/flasher (if used)/bracket assembly and guide into the aluminum can of the drum until the bracket rests against the spacers.

m. Insert two 10-32x3/4" screws provided in the installation kit into the holes in the spacer. Rotate the bracket assembly to fully close the bracket slots while the screws are tightened.

n. If a spread lens is used, remove the lens ring and cover glass. Reuse the gasket on the spread lens. Install the spread lens with the flat side IN and the lens elements oriented vertically.

o. Aim the beacon using the gunsights built into the lift eye and hinge, as shown in Figure 4-6. On long ranges, use an observer in a boat to ensure that the brightest part of the beam is on the channel centerline.

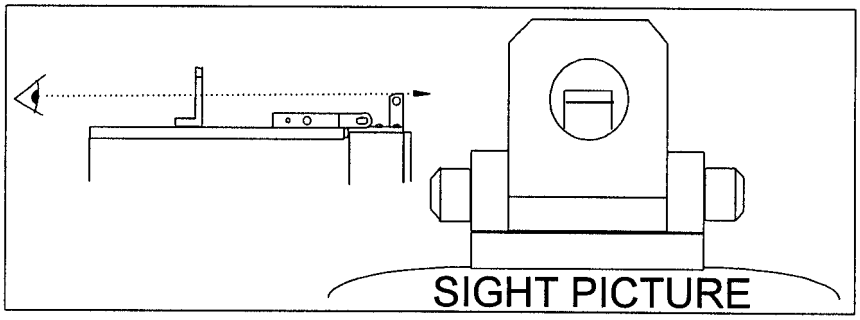

Figure 4-6

4. Focusing.

a. The lantern is prefocused and no adjustments are required.

5. Maintenance.

a. Secure power to the beacon.

b. Loosen the 4 toggle latches and secure the door in an upright position with the supplied pin. Allow the lamps to cool if they were operating.

c. Wearing gloves or using a soft cloth, remove the lamp in the operating position by leaning it away from the frame to free it from the turret and pull out. Remove and discard any burned out lamps at this time.

d. Lamp installation is recommended with the turret rotated (X position) so that no lamp compresses the spring contacts. Rotate unused lamps into operating position. Install each lamp by pushing into the turret until it snaps into place. Used a clean cloth or the protective wrapper supplied with each lamp to avoid getting fingerprints on the lamp.

e. Rotate the lampchanger to the first position (red paint on turret), apply power to the beacon, cover daylight control or photocontrol (note: the K-4121 can have up to a 5 minute delay when switching) and press the TEST button on the side of the lampchanger. The turret should advance to the next operating position and light. Repeat for all remaining lamps.

f. Secure power to the lampchanger, allow to cool and rotate the turret to the first position. CAUTION - THE LAMPS AND TURRET MAY BE HOT!

g. Close the door, secure the latches, apply power

to the lantern, cover daylight control or photocontrol (note: the K-4121 can have up to a 5 minute delay when switching) and check for proper operation.

6. Troubleshooting.

a. Check filament in operating lamp.

Fixed-on, 24 Hours a Day

b. Measure voltage at MOTOR and NEUTRAL terminals of the CG-4P. If 120VAC is not present, problem is with main power. If 120VAC is present and lamp is not lit, replace lampchanger.

Fixed-on, Daylight Controlled

c. Measure voltage at MOTOR and NEUTRAL terminals of the CG-4P. If 120VAC is not present, problem is with main power.

d. Cover photocontrol (note: the K-4121 can have up to a 5 minute delay when switching).

e. Measure voltage at LAMP and NEUTRAL terminals of the TERMINAL STRIP. If 120VAC is not present, replace photocontrol.

f. Measure voltage at LAMP and NEUTRAL

terminals of the CG-4P. If 120VAC is not present, replace wiring between lampchanger and terminal strip. If 120VAC is present, lamp is not lit, replace lampchanger.

Flashing, Daylight Controlled

g. Measure voltage at MOTOR and NEUTRAL terminals of the CG-4P. If 120VAC is not present, problem is with main power.

h. Measure voltage at MOTOR and NEUTRAL terminals of the FLAC-300. If 120VAC is not present, replace black and white wires between flasher and lampchanger.

i. Cover daylight control. Measure voltage at LAMP and NEUTRAL terminals of the FLAC-300. If 120VAC is not present (should vary between 0 and 120VAC according to flash rhythm), remove daylight control. If 120VAC is present after removing daylight control, replace it. If 120VAC is still not present, repair or replace the FLAC-300. IF REPAIRED, BE SURE THE CORRECT RHYTHM CARD IS INSTALLED.

j. Measure voltage at LAMP and NEUTRAL terminals of the CG-4P. If 120VAC is not present (should vary between 0 and 120VAC according to flash rhythm), replace red wire between flasher and lampchanger. If 120VAC is present and lamp is not lit, replace lampchanger.

B. 24 Inch Range Lantern (RL-24).

1. Notes.

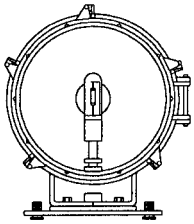

a. The RL-24 is a 24 inch range light. It uses the same drum assembly as the DCB-24 rotating beacon. The beam color can be white, red or green when using the appropriate colored coverglass. The RL-24 uses a CG-2P 120VAC, 1000 watt lampchanger. Additional information can be obtained from the 24 inch range light instruction book included with the lantern.

2. Safety Warning.

a. **SECURE POWER TO THE AID PRIOR TO INSTALLATION AND SERVICING. CHECK TO BE SURE POWER IS OFF**

b. Components in these beacons become very hot when operating. Allow the beacon to cool off for 15 minutes before opening. Wear a face shield or goggles when handling lamps, and gloves and long sleeves to protect your arms and hands from hot components.

c. These beacons are powered by 120VAC. Use extreme care when installing, operating, testing, troubleshooting, or performing maintenance work on these beacons.

3. Installation.

a. The net weight of the lantern unpacked, is 160 pounds. Therefore, weight handling equipment will be needed at the aid to facilitate installation. The lantern must be installed on a stable platform to ensure that accurate aim is maintained. The lantern is secured to the platform using 1/2" bolts, as shown in Figure 4-7. Leveling bushings are provided in the base to assist in leveling the lantern. Slots in the base allow the beacon to be aimed.

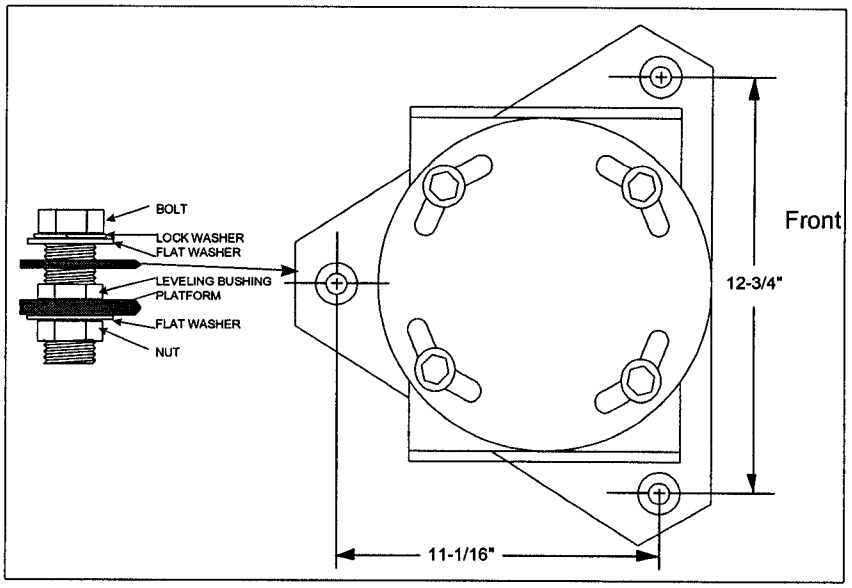

Figure 4-7

b. Place a torpedo level on the base plate of the lantern and adjust the leveling bushings until it is level. Be sure to check levelness in both directions.

c. RL-24 lanterns burning fixed-on, 24 hours a day can be wired through a disconnect to 120VAC. Lanterns daylight controlled may be wired

through an Intermatic K4121 photocontrol (see Figure 4-8). Daylight controlled and flashed lanterns can be wired through an ACFC. Day/night range lights receive power through a RSB-AC.

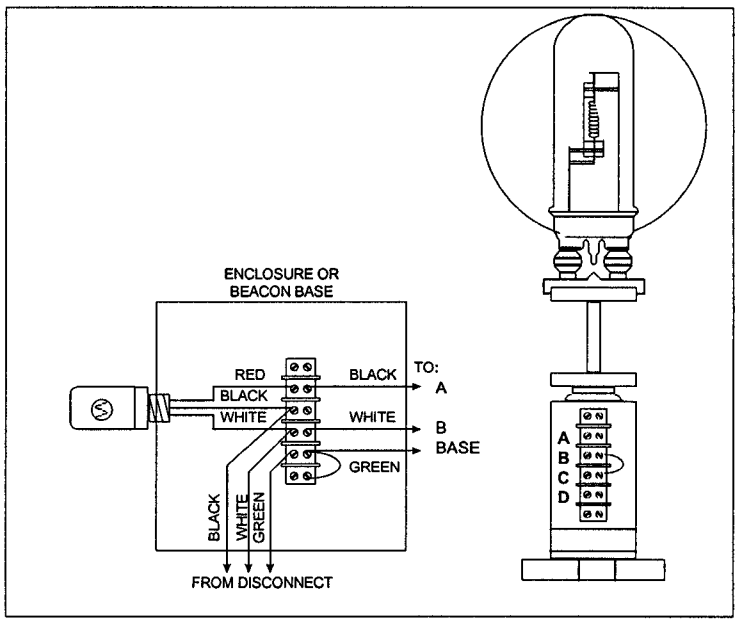

Figure 4-8

d. Wiring shall be 12/3 SO (12/4 if monitored) cable through a watertight stuffing tube, or individually

insulated wires installed in conduit (Liquid-Flex near lantern). Wires shall have insulated spring spade lugs and terminated at terminals "A" (120VAC), "B" & "C" (Neutral, jumper between "B" & "C") and the lampchanger's base (Ground) or at a terminal strip, as shown in Figure 4-8.

4. Focussing.

a. If the lampchanger is removed for any reason, the focus must be checked to ensure proper operation. NOTE: BE SURE POWER IS TURNED OFF DURING FOCUSSING.

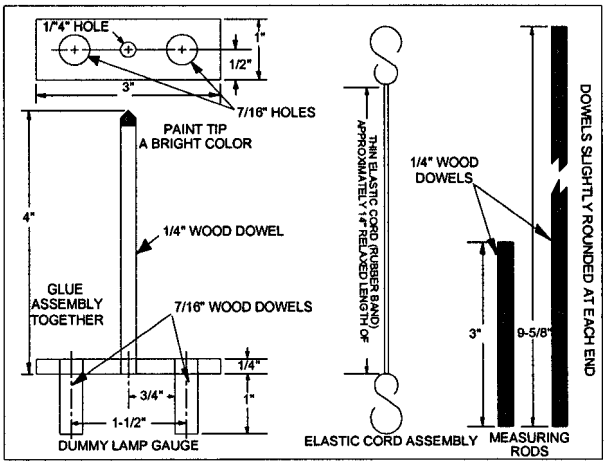

Figure 4-9

b. Install at least 4 elastic cord assemblies (Figure 4-9) on the clips securing the large glass mirror in the lantern. Use opposite locating clips for each cord assembly. The cords should cross at one point (snap to prevent binding). Remove both spherical reflectors from the lampchanger. Rotate the lampchanger turret to obtain access to the rear reflector by raising the trip lever (if in primary position), or rotating to the primary position (if tripped).

c. Using the reflection of your eye in the large mirror, look directly into the beacon until the reflected image of the elastic cords are over their reflection. The reflected center of your eye should now be at the center of the mirrorpoint, as shown in Figure 4-10. Mark this point on the mirror with a grease pencil (newer mirrors have a hole at the center).

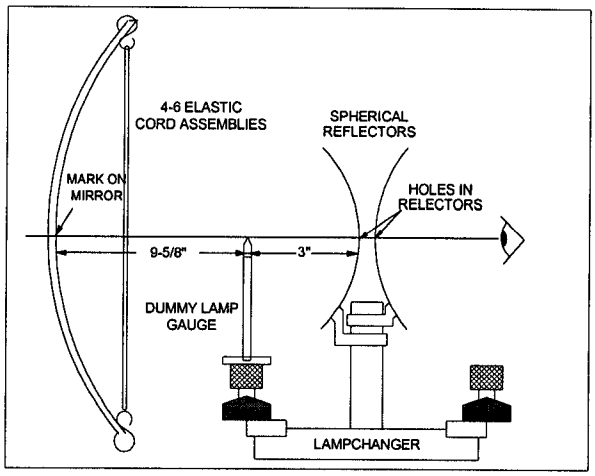

Figure 4-10

d. Install the dummy lamp gauge in the operating lamp sockets (closest to mirror). Position the lampchanger so that the tip of the dummy gauge to the mirror is 9-5/8" using the long measuring rod. Next, using the same image reflections described above, move the lampchanger side-to-side or up-and-down) so that the dummy lamp tip and its reflection line up at the point marked on the mirror. Recheck the distance to the mirror (9-5/8"). If adjustments at the base do not obtain proper placement of the lampchanger,

adjustments to the bipost lamp sockets may be necessary.

e. Install only the spherical reflector in the position of the operating lamp. Sight through the center of the reflector and align it until the mark on the mirror, intersection of the elastic cords, dummy lamp gauge and the holes in the spherical reflector are lined up (Figure 4-10). The distance from the speherical reflector in the operating position to the tip of the dummy lamp gauge should be 3" (use 3" measuring tool to check). Align as necessary then tighten fasteners securing the reflector.

f. Install remaining spherical reflector. Remove the dummy lamp gauge and install in the spare lamp position. Rotate the turret so that it is in the operating position (facing the large mirror) and sight through the spherical reflectors. Adjust only the spherical reflector IN THE OPERATING POSITION until the images are lined up. Use the 3" measuring tool to check the distance to the dummy lamp gauge, then tighten fasteners securing the spherical reflector.

g. Wearing gloves, install 2 new 1000 watt lamps in the lampchanger.

h. Seat each lamp fully in the collets and tighten the fixed knurled collar first, then the loose collar.

This will prevent lamp breakage.

i. Rotate the lampchanger so the primary lamp is in the operating position (the word "TRIPPED" will not be visible).

j. Apply power to the lantern and press the test button beneath the drum (older beacons do not have this feature). The lampchanger should rotate, lock into position and light the secondary lamp.

k. Secure power and rewind the lampchanger to the primary position.

l. Reapply power and aim the lantern with the aid of an observer at the far end of the channel and align until brightest along the centerline.

5. Maintenance.

a. Secure power to the lantern.

b. Place a torpedo level on the base plate and check levelness in two directions.

c. Note if the lampchanger is in the secondary position by the word "TRIPPED" on the end of the lampholder. If tripped, both lamps will be replaced.

d. Wearing gloves, goggles or faceshield, open the door, loosen the knurled collar securing the lamp closest to you and remove the lamp by pulling straight up (set aside if the lampchanger was not tripped). Access the other lamp by either rotating the lampholder or pulling up on the "trip" lever. Remove the lamp and discard. Clean the spherical reflectors on the lampchanger, the mirror and cover window at this time with mild soap and water.

e. Check the focus of the lantern by installing the focus fixture (see figure 4-10) in the operating position of the lampchanger (closest to mirror).

f. Use the long measuring rod, be sure that the distance from the tip of the focus fixture to the center of the mirror is 9-5/8" and that the rod is level (hold level to rod).

g. If this measurement is not within 9-5/8" +/- 1/16", go to section 4 and focus the lantern.

h. Wearing gloves, install 2 new lamps in the lampchanger (or the secondary lamp in the operating position, if unused).

i. Seat each lamp fully in the collets and tighten the fixed knurled collar first, then the loose collar. This will prevent lamp breakage.

j. Rotate the lampchanger so that the primary lamp is in the operating position (the word "TRIPPED" will not be visible).

k. Apply power to the lantern and press the test button beneath the drum (older beacons do not have this feature). The lampchanger should rotate, lock into position and light the secondary lamp.

l. If the lampchanger does not lock into position, secure power to the lantern, adjust the spring tension on the lampchanger by loosening the 3 Allen screws beneath the large knurled collar (one screw is facing the mirror) and turn the collar counter clockwise to increase tension. Turn the collar enough to cause the lampchanger to lock in place when tripped. Too much tension could cause the lamp filament to break, causing a discrepancy.

m. Retest, then secure power and rotate the lampchanger to the primary position.

n. Close door and tighten the swing clamps evenly to properly seat the door gasket. Turn power back on, momentarily cover the daylight control or photocontrol (note: the K-4121 can have up to a 5 minute delay when switching) and check to see if the lamp is turns on.

6. Troubleshooting.

a. Check filament in operating lamp.

CG-2P - Fixed-on, 24 Hours a Day

b. Measure voltage at A & B terminals of the CG-2P. If 120VAC is not present, problem is with main power. If 120VAC is present and lamp is not lit, replace lampchanger.

CG-2P - Fixed-on, Daylight Controlled using K-4121

c. Measure voltage at Black and White leads on input terminal strip to K-4121 photocontrol. 120VAC is not present, problem is with main power.

d. Cover photocontrol (note: the K-4121 can have up to a 5 minute delay when switching).

e. Measure voltage at Red and White leads on input terminal strip to K-4121 photocontrol. If 120VAC is not present, replace photocontrol.

f. Measure voltage at A & B terminals of the CG-2P. 120VAC is not present, replace wiring between photocontrol terminal strip and lampchanger. If 120VAC is present and lamp does not light, replace lampchanger.

CG-2P - Flashing/Daylight Controlled using ACFC

g. Measure voltage at A & B terminals of the CG-2P. If 120 VAC (should vary between 0 and 120VAC according to flash rhythm) is not present, troubleshoot the ACFC (chapter 7). If 120VAC is present and lamp does not light, replace lampchanger.

CHAPTER 5. SOUND SIGNALS

A. **CG-1000 Sound Signal System**.

1. Notes.

   a. The CG-1000 sound signal system is comprised of a CG-1000 power supply and an ELG-300/02 (or ELU-300/02) emitter (Figure 5-1). ELG emitters are directional and resemble a loudspeaker while the ELU emitters are omnidirectional with outlets equally spaced around its perimeter.

   b. A few CG-1000 power supplies were converted to 500 hertz to operate ELG-500/02 emitters. Refer to the instruction manual supplied with this power supply for proper settings as they differ from the 300 hertz models.

c. Refer to the CG-1000 instruction manual for detailed instructions regarding this equipment.

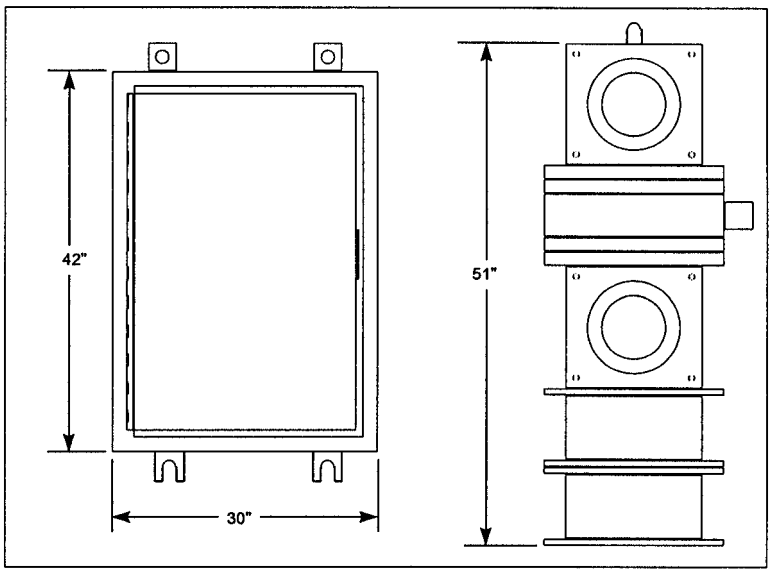

Figure 5-1

2. Safety Warning.

a. **SECURE POWER TO THE AID PRIOR TO INSTALLATION AND SERVICING. CHECK TO BE SURE POWER IS OFF.**

b. Secure power while working within 25 feet of emitter. Ear protection is required if working closer than 370 feet to emitter while it is operational.

c. The CG-1000 is powered by 120VAC. Use extreme care when installing, operating, testing, troubleshooting, or performing maintenance work on this device.

d. Components in the CG-1000 remain energized even after power is secured until capacitors are discharged.

3. Installation.

a. The net weight of the power supply and emitter are 350 pounds and 496 pounds, respectively. Therefore, weight handling equipment will be needed at the aid to facilitate installation.

b. The CG-1000 instruction manual, packed with each sound signal system, provides detailed instructions for installation.

c. The emitter shall not be installed closer than 15 feet in front of a reflecting surface (wall).

d. The ballast load controller is not used at our installations.

e. Use shielded wires or wires housed in a grounded metallic conduit for both the supply and connection to the emitter. The cabinet, conduit and/or shield must be attached directly to a suitable earth ground, otherwise Radio Frequency Interference (RFI) generated by the power supply may be transmitted to other equipment.

4. Maintenance.

a. Perform the following system status check when arriving at the aid:

b. Turn on sound signal at fog detector (if not operating continuously). Note if the tone is clear and on rhythm.

c. Turn on the ammeter in the power supply. Hold the Coding Switch in the MANUAL position and note if the current is within the green range of the meter (approximately 9 amps. Note: some aids are set at a lower current to reduce range. Usually the meter is marked with the correct setting, otherwise consult the aid file). Adjust the Horn Level control if its out of range (Figure 5-2).

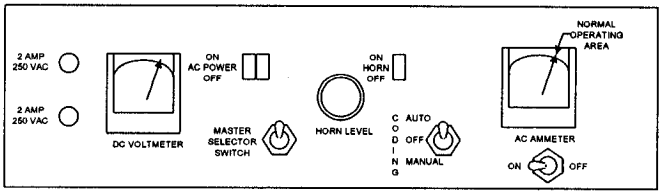

Figure 5-2

d. If the horn current does not fall within the range even when the horn level control is turned fully clockwise, adjust the power factor correction, as detailed in the instruction manual.

e. Turn AC Ammeter switch to OFF.

f. Place the Coding Switch back to AUTO.

g. Secure the AC power to the sound signal (CB1).

h. Inspect the emitter for excessive rust, cracks and bird's nests. Clean all 9 drain holes in the emitter (Figure 5-3).

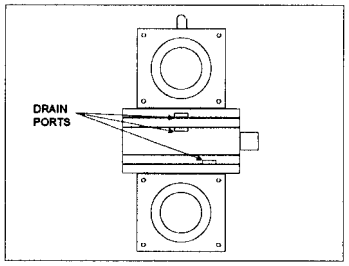

Figure 5-3

i. Be sure personnel are cleared from the area. Turn AC power ON and check for proper operation.

5. Troubleshooting.

a. The CG-1000 sound signal system is relatively complex in operation and voltage checks at various points can be used to detect the cause of failure.

b. Because this equipment remains energized after power is secured, service shall only be performed by individuals who have successfully completed the ANC-LT course.

c. The CG-1000 instruction manual has a detailed theory of operation and troubleshooting flowchart for determining the cause of failure. In addition, ANC-LT handouts from the NATON School should be brought to the aid to assist with troubleshooting.

CHAPTER 6. POWER

A. ATON Power Supply

1. Notes.

   a. The ATON Power Supply is available in two versions: standard and high wattage. The standard has provisions for loads up to 8 amps, and two high wattage versions can power loads up to 15 and 25 amps. Since each is configured differently, they will be addressed separately. Both units feature both short circuit and thermal overload protection.

2. Safety Warning.

   a. **SECURE POWER TO THE AID PRIOR TO INSTALLATION AND SERVICING. CHECK TO BE SURE POWER IS OFF.**

   b. The ATON Power Supply is powered by 120VAC. Use extreme care when installing, operating, testing, troubleshooting, or performing maintenance work on this device.

3. Installation - Standard.

   a. The power supply is a hermetically sealed unit

that is suitable for use in an exposed marine environment (Figure 6-1). The supply can be pole mounted. Installation in an enclosure requires passive venting (screens, louvers, etc.) to prevent overheating.

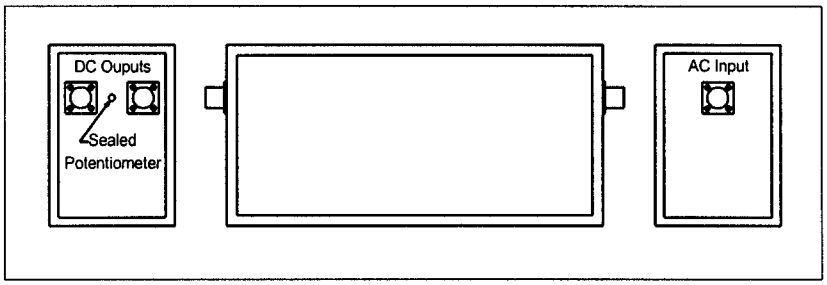

Figure 6-1

b. Input requirements are 95-130VAC (120VAC nominal) with ground through a disconnect switch. The connectors must be procured locally and made up at a facility capable of soldering the pin connections. The input connector is a MS3106R-16S-8S with MS3057-8B cable clamp. Pin connections are: Pin A - 120VAC Hot, Pin B - 120VAC - Neutral, Pin C - Chassis Ground, as shown in Figure 6-2. Pins D & E are not used. Use 14/3 SO cable for input to the supply.

c. Each output is capable of supplying up to 4

amps. If a single load exceeds 4 amps, then the output from both connectors should be combined into one. The output connectors are MS3106R-16-9P with MS3057-8B cable clamps. Pin connections are: Pin A - 12VDC (+), Pin B - Chassis Ground, Pin C - 12VDC. Pin D is not used. If only one connector is used, cap the other. Use 18/2 SO cable for the outputs. Step-up the wire to 12/2 or 10/2 SO if voltage drop to the load affects operation.

d. Connect the 12VDC lead(s) to the load(s) and turn on AC power to the power supply. Adjust the potentiometer between the output connectors so that there is 12VDC <u>at the load</u> (flasher terminals, FA-232, etc.

4. Installation - 135515 Amp Power Supply|&end_TA&|.

a. The power supply is a hermetically sealed unit with an external radiator (Figure 6-2). Installation in a vented enclosure is suggested as the radiator becomes quite hot to the touch.

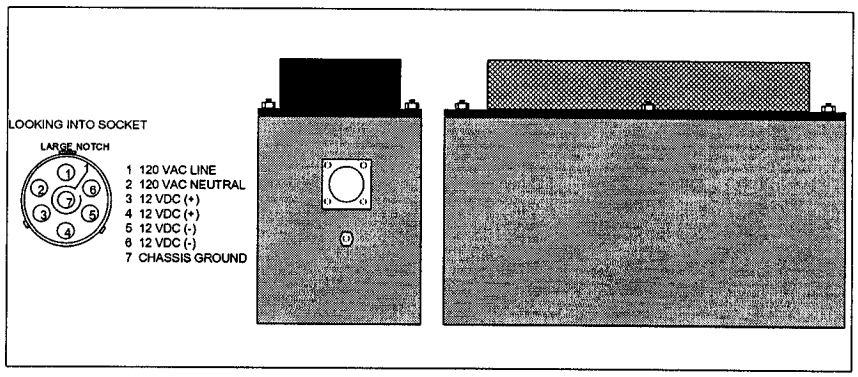

Figure 6-2

b. Input requirements are 120VAC with ground through a disconnect switch. The connector is included with the power supply and must be made up at a facility capable of soldering the pin connections. The 120VAC input and both dual 12VDC outputs go through the same connector. Care must be exercised when making up the connector to ensure that 120VAC is not applied

to the 12VDC power cable (due to loose or frayed strands, etc.). Pin connections are detailed in Figure 6-2. Due to the design of the connector, only 16AWG wire will fit the pin connections. Both 12 volt (+) and (-) pins should be used to reduce wire and terminal heating. Both pairs of 16 AWG wires should combined just past the rubber boot and stepped up to the appropriate sized conductor for powering the load.

c. Connect the 12VDC lead(s) to the load(s) and turn on AC power to the power supply. Adjust the potentiometer between the output connectors so that there is 12VDC <u>at the load</u> (flasher terminals, FA-232, etc.)

d. Note: This power has been discontinued and is limited to those installed in the field. Additional information on them can be obtained from COMDT (G-SCE).

5. <u>Installation -</u> 135525 Amp Power Supply.

a. The power supply has a gasketed cover and is suitable for use in an exposed marine environment (Figure 6-3). The supply can be pole mounted or installed in a vented enclosure.

b. Input requirements are 90-145VAC (120VAC nominal) with ground through a disconnect

switch. Early models are provided with connectors but must be made up at a facility capable of soldering the pin connections. Later versions came with a 10 foot pig-tail attached to each connector. Pin connections are detailed in Figure 6-3. Use 10/3 or 12/3 SO cable for input to the supply.

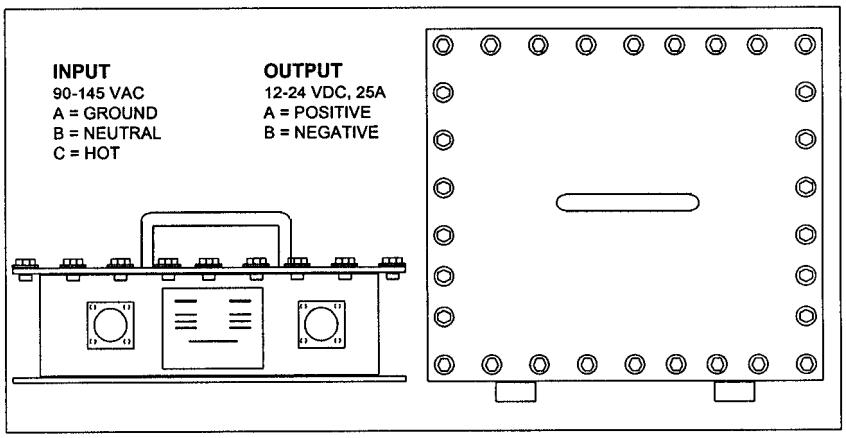

Figure 6-3

c. The output is capable of supplying up to 25 amps. Pin connections are detailed in Figure 6-3. Up to 6 AWG wire may be installed in the connectors or spliced to the pig-tails to limit voltage drop to the load.

d. Connect the 12VDC lead to the load(s) and turn on AC power to the power supply. The power supply is preset to 12.5 VDC at the connector. If the voltage at the load (lampchanger terminals, FA-232, etc., load ON) is less than 12.0 volts, remove the cover on the power supply and adjust the potentiometer until the necessary voltage is achieved.

5. Troubleshooting - All Types.

a. The 8 and 15 amp power supplies are hermetically sealed units and unrepairable. Troubleshooting is limited to determining if 120VAC power is being provided to the supply and if 12VDC is being supplied to the load. Output voltage may drift with use, and if it can not be adjusted by the potentiometer, replace the power supply. The 25 amp supply may be returned to the vendor for repair (cost involved when out of warranty).

b. If the power supply operates intermittently, be sure enclosure is vented and free from obstructions (bird's nests, etc.). The power supply will turn off when the base temperature exceeds 149 degrees F and turn on when it cools down. The supply will also shut down if an external short circuit exists in the load.

c. The supplies carry a 5 year warranty from date

of manufacture and will be replaced or repaired free of charge by the ELC if failure occurs. The power supplies contain a date code consisting of a four digit number where the first two digits represent the year and the last two the week of manufacture.

A. **AC Flash Controller (ACFC)**.

1. Notes.

   a. The ACFC is a device used to flash 120VAC and/or daylight control lamps of 1000 to 2000 watts where there is no requirement for an emergency light. It also provides transient line protection and circuit breaker protection for the load(s).

2. Safety Warning.

   a. **SECURE POWER TO THE AID PRIOR TO INSTALLATION AND SERVICING. CHECK TO BE SURE POWER IS OFF.**

   b. The ACFC is powered by 120VAC. Use extreme care when installing, operating, testing, troubleshooting, or performing maintenance work on this device.

3. Installation.

   a. The ACFC weighs approximately 35 pounds. The mounting feet have 5/16" holes. It can be mounted to a flat bulkhead or pole using a prefabricated bracket. Refer to the instruction

booklet GCF-RWL-2106 for complete installation instructions.

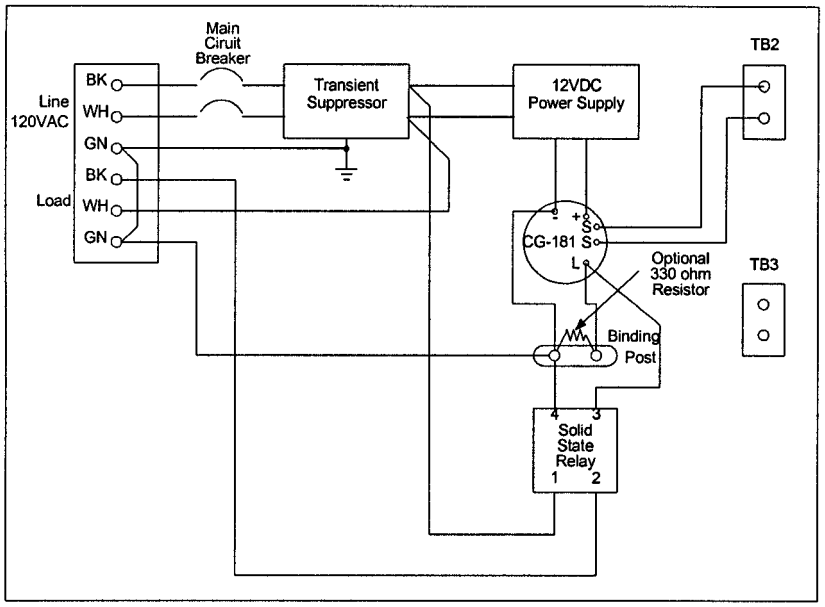

Figure 7-1

b. A CG-181, with the proper rhythm, and a daylight control (Type-L, if necessary) must be installed in the ACFC for proper operation (see Figure 7-1). One daylight control may be

installed in either service entrance (near TB2 or TB3) or remotely if installed indoors.

c. When controlling two 1000 watt lamps, the circuit breaker must be upgraded to a 25 amp model (new versions already have 25 amp breakers).

d. 120VAC power should be supplied to TB1 with spring spade lugs via 12 AWG copper wire, through a disconnect switch. The wiring convention black-120VAC, white-neutral, and green-earth ground is used.

e. The load is connected to TB1, using the above convention, with 12AWG (or larger, if required) copper wire terminated at each end with spring spade lugs.

f. CG-2P lampchanger installations should be wired to the appropriate terminals in the rotating beacon or to the lampchanger (for RL-24 or Classical lenses).

4. Maintenance.

a. Perform the following system status check when arriving at the light:

b. Cover the daylight control (if equipped) and note if the light comes on and displays the proper rhythm.

5. Troubleshooting.

a. The ACFC is relatively simple in operation and voltage checks at various points can be used to detect the cause of discrepancies.

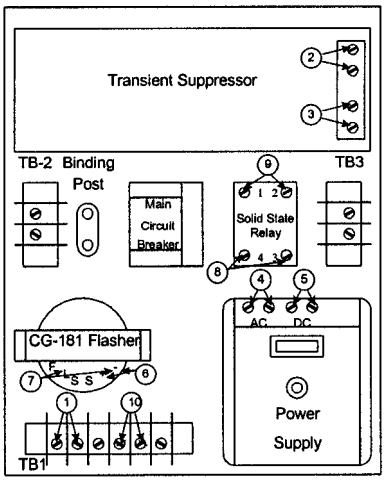

Figure 7-2

b. Failure to obtain the following voltages at the test points identified in Figure 7-2 will identify a failed component. After removing one yellow lead from one of the "S" terminals (if equipped) on the flasher, measure the following:

1. Incoming voltage should be approximately 120 VAC.

2. Input voltage to transient suppressor should be approximately 120 VAC.

3. Output voltage from transient suppressor should be approximately 120 VAC.

4. Input voltage to power supply should be approximately 120 VAC.

5. Output voltage from power supply should be 12-18 VDC.

6. Input voltage to the flasher should be 12-18 VDC.

7. Output voltage from the flasher should be a pulsing (if flashed) 12-18 VDC.

8. Input voltage to the solid state relay should be pulsing (if flashed) 12-18 VDC.

9. Output voltage from the solid state relay should be pulsing (if flashed) AC voltage from 0 to 120 VAC.

10. **Output voltage should be pulsing AC AC voltage (if flashed) from 0-120 VAC.**

c. Reattach the yellow lead on the flasher.

B. Range Switch Box - AC Version (RSB-AC)

1. Notes.

   a. The RSB-AC (Figure 7-4) is used on AC powered ranges to switch between daytime and nighttime lights. The device is comprised of a circuit breaker, K-4221 photocontrol (same as K-4121 but swivels) and a single pole, double throw (SPDT) relay.

   b. Relay RY1 is energized at night disabling the daytime signal and enabling the nighttime signal.

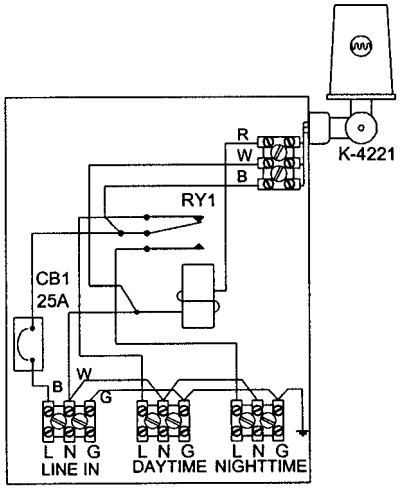

Figure 7-4

2. Safety Warning.

a. **SECURE POWER TO THE AID PRIOR TO INSTALLATION AND SERVICING. CHECK TO BE SURE POWER IS OFF.**

b. The RSB-AC is powered by 120VAC. Use extreme care when installing, operating, testing, troubleshooting, or performing maintenance work on this device.

3. Installation.

a. The RSB-AC is typically installed near the day and night range optics. It is housed in a raintight box suitable for installation outside.

b. Power shall be provided through a disconnect to the LINE IN terminals of the RSB-AC. "L", "N" and "G" refers to the color coding LINE, NEUTRAL and GROUND, respectively.

c. Wires may be terminated at the Euro-style terminal strips without lugs as they readily accept bare copper wire.

d. Lampchangers for the day and night optics are wired to the day and night terminal strips. If a 12VDC nighttime signal is used, wire the ATON

power supply to the nighttime terminal strip.

4. Maintenance.

a. Perform the following system status check when arriving at the light during the daytime:

b. Note if the daytime light is on.

c. Cover the photocontrol and determine if the daytime light turns off and the nighttime light turns on. Note that the photocontrol can have up to a 5 minute delay when switching.

d. Check components for frayed wiring and corrosion. Replace or repair as necessary.

5. Troubleshooting.

a. The RSB-AC is simple in operation. Contacts in K-4221 photocontrol close at night energizing the relay which disconnects the 120VAC daytime load and turns on the 120VAC nighttime load, as shown in Figure 7-6. The relay is an open model type that allows visual and audible indication that it is working. Voltage checks at various points can be used to detect the cause of discrepancies:

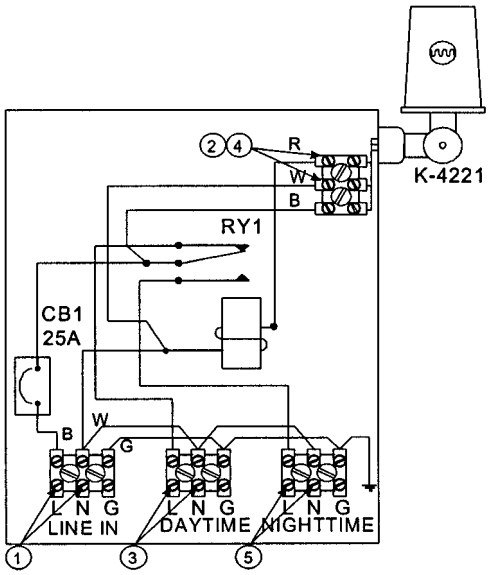

Figure 7-5

1. Incoming voltage should be approximately 120 VAC.

2. Output voltage from K-4221 during daytime (control uncovered) should be 0 VAC. If not, replace photocontrol.

3. Output voltage to daytime signal should be approximately 120 VAC. If not, replace relay RY1.

4. Cover photocontrol (note: the K-4221 can have up to a 5 minute delay when switching). Output voltage to from K-4221 during daytime (control covered) should be approximately 120 VAC. If not, replace photocontrol.

5. Output voltage to ~~daytime~~ **nighttime** signal should be approximately 120 VAC. If not, replace relay RY1.

6. Remove cover on photocontrol.