SPECIAL PURPOSE CRAFT - LAW ENFORCEMENT (SPC-LE) OPERATOR'S HANDBOOK

U.S. Department of Homeland Security

United States Coast Guard

COMDTINST M16114.40
January 2008

This page intentionally left blank.

U.S. Department of Homeland Security
United States Coast Guard

Commandant
United States Coast Guard

2100 Second Street, S.W.
Washington, DC 20593-0001
Staff Symbol: CG-731
Phone: (202) 372-2450

COMDTINST M16114.40
JANUARY 30, 2008

COMMANDANT INSTRUCTION M16114.40

Subj: SPECIAL PURPOSE CRAFT – LAW ENFORCEMENT BOAT OPERATOR'S HANDBOOK

1. PURPOSE. This Manual provides technical orientation, performance characteristics, and basic operating procedures for the Special Purpose Craft – Law Enforcement (SPC-LE). It also standardizes boat outfit, storage and equipment layout.

2. ACTION. Area, district and sector commanders, commanders of maintenance and logistics commands, commanding officers of headquarters units, assistant commandants for directorates, Judge Advocate General, and special staff offices at Headquarters shall ensure adherence to the contents of this Manual. To ensure standardization, there is no command requirement with regard to the type or location of equipment carried except as noted. All design or structural alterations are prohibited unless specifically authorized in accordance with this Manual. Internet release authorized.

3. DIRECTIVES AFFECTED. None

4. DISCUSSION. This Manual contains information necessary to safely and efficiently operate the SPC-LE. The operational capabilities, limitations, and emergency procedures are clearly stipulated. The fittings, outfit list, and physical characteristics of the boat are described in detail.

5. PROCEDURE. Operational and unit commanders with a SPC-LE shall ensure the procedures and limitations detailed within this Instruction are followed. Forward any comments, corrections, recommendations, and questions regarding this handbook to the SPC-LE Facility Manager in accordance with Chapter 1, Section C.1 of this Manual. Design and structural change requests shall be submitted as outlined in the Naval Engineering Manual, COMDTINST M9000.6 (series).

DISTRIBUTION – SDL No.148

	a	b	c	d	e	f	g	h	i	j	k	l	m	n	o	p	q	r	s	t	u	v	w	x	y	z
A																										
B		2	2						2					5										2		
C							2		*															2	2	
D																				2						
E								2																		
F																										
G																										
H																										

NON-STANDARD DISTRIBUTION LIST: Ci: Sta Marathon (10), Sta Key West (15), Sta Islamorada (10), Sta South Padre Island (15), Sta Lake Worth Inlet (10), Sta Miami Beach (10), Sta Fort Lauderdale (10), Sta Grand Isle (10), Sta Venice (10), Sta San Diego (15), Sta Bellingham (15), Sta Fort Pierce (5), Sta Fort Myers (10), Sta St. Clair Shores (5), Sta Belle Island (10), Sta Marblehead (5), Sta Buffalo (10), Sta Oswego (5), Sta Erie (5), Sta San Juan (10), Sta New York (15), Sta Ashtabula (5), Sta Niagra (5).

6. ENVIRONMENTAL ASPECT AND IMPACT CONSIDERATIONS. Environmental considerations were examined in the development of this Manual and have been determined to be not applicable.

7. FORMS/REPORTS. None.

ROBERT C. PARKER /s/
Rear Admiral, U. S. Coast Guard
Assistant Commandant for Operations Capability

RECORD OF CHANGES

CHANGE NUMBER	DATE OF CHANGE	DATE ENTERED	ENTERED BY

This page intentionally left blank.

Table of Contents

CHAPTER 1 INTRODUCTION 1-1

SECTION A. WARNINGS, CAUTIONS, AND NOTES 1-3
A.1. Warning 1-3
A.2. Caution 1-3
A.3. Note 1-3
SECTION B. FACILITY MANAGER 1-5
SECTION C. CHANGES 1-7
C.1. Engineering Changes (ECs) 1-7
SECTION D. ACTION 1-9
D.1. Configuration Control 1-9

CHAPTER 2 BOAT CHARACTERISTICS 2-1

SECTION A. GENERAL DESCRIPTION 2-3
A.1. Design 2-3
A.1.a. Hull and Deck 2-3
A.1.b. Walking Surfaces 2-3
A.1.c. Cabin 2-3
A.1.d. Collar 2-3
A.1.e. Bow Post and Tow Post 2-3
A.2. Manufacturer 2-3
A.3. Missions 2-4
A.4. Boat Specifications 2-4
A.4.a. Physical Characteristics 2-4
A.4.b. Operational Characteristics and Parameters 2-5
A.5. Hull Reference Points 2-5
SECTION B. COMPARTMENTS 2-7
B.1. Anchor Locker 2-7
B.2. Cabin 2-7
B.2.a. Windows 2-11
B.2.a.1. Forward Facing Windows 2-11
B.2.a.2. Sliding Door Windows 2-11
B.2.a.3. Combination Windows 2-13
B.2.a.4. Aft Bulkhead Windows 2-13
B.2.a.5. Weather-Tight Door Window 2-13
B.2.a.6. Tinted Spotter Windows 2-14
B.3. Cuddy Cabin 2-15
B.4. Battery Lockers 2-16
B.5. Generator Compartment 2-17

B.6. Air Conditioner Compartment 2-18
B.7. Port and Starboard Aft Deck Lockers 2-19
B.8. Engine Well/Void 2-20
B.9. Cabin Dewatering Pump 2-20
SECTION C. FITTINGS AND DECK EQUIPMENT 2-21
C.1. Bow Eye 2-21
C.2. Standard Cleats 2-22
C.3. Tow Bitts 2-22
C.4. Handrails 2-24
C.5. Transom Eyes 2-25
C.6. Non-Skid 2-25
C.7. Deck Lighting 2-26
C.8. Lifting Eyes 2-28
C.9. Navigation Lights 2-29
C.10. Ring Buoy and Strobe Light 2-30
C.11. Towline Reel 2-31
C.12. Boarding Ladder 2-33
SECTION D. MAIN DECK STOWAGE 2-35
D.1. Anchor/ Ammunition Locker 2-35
D.2. Port Aft Deck Locker 2-35
D.3. Starboard Aft Deck Locker 2-36

CHAPTER 3 BOAT SYSTEMS 3-1

SECTION A. PROPULSION SYSTEM 3-3
A.1. Engine 3-4
A.2. Lubrication Systems 3-10
A.3. Engine Cooling System 3-12
A.4. Engine Fuel System 3-13
A.5. Ignition System 3-13
A.6. Starter 3-13
A.7. Engine Controls 3-14
A.7.a. Engine Control Modes 3-15
A.7.b. Outer Engine Casualty 3-16
A.7.c. Center Engine Casualty 3-16
A.7.d. Gearshift and Throttle Control Touchpad 3-16
A.8. Engine Key Switches 3-18
A.8.a. Kill Switch 3-18
A.9. Engine Gauges and Warnings 3-19
A.9.a. Gauge Operation 3-19
A.10. Power Tilt Switches 3-20
A.10.a. Gearshift/Throttle Power Tilt Switch 3-20
A.10.b. Panel-Mounted Power Tilt Switches 3-20
A.10.c. Engine-Mounted Power Tilt Switch 3-21
A.11. Manual Tilt Release Valve 3-22

A.12. Flushing Connection 3-23
A.13. Tilt Lock Lever 3-23
A.14. Sacrificial Anodes 3-24
A.15. Engine Exhaust Port 3-24
A.16. Fuse Panels 3-25
A.17. Propellers 3-25
A.18. Flo-Torq Assembly 3-26
SECTION B. HULL SYSTEM 3-27
B.1. Draft 3-27
B.2. Sound Insulation 3-27
B.3. Performance Fins 3-27
B.4. Lifting Strakes 3-27
B.5. Beaching Plate 3-28
B.6. Inspection Access 3-29
B.7. Diagonal Stiffeners 3-29
B.8. Hull Access Plug 3-29
B.9. Deck Drains and Scuppers 3-31
B.9.a. Forward Cabin Deck Drains 3-31
B.9.b. Forward Cabin Deck Scuppers 3-31
B.9.c. Aft Weather Deck Drains 3-32
B.9.d. Engine Well Deck Drains 3-33
B.9.e. Cabin Drain Plugs 3-34
SECTION C. COLLAR SYSTEM 3-35
C.1. Attachment 3-35
C.2. Repair and Removal 3-37
SECTION D. STEERING SYSTEM 3-39
D.1. Hydraulic Steering Cylinder 3-39
D.2. Tie Bar Assembly 3-39
D.3. Hydraulic Pump Assembly 3-39
D.4. Hoses 3-40
SECTION E. PROPULSION FUEL SYSTEM 3-41
E.1. Fuel Tank 3-41
E.2. Fuel Tank Vent 3-41
E.3. Fuel Tank Fill (Gasoline) 3-42
E.4. Fuel Filters/Water Separators 3-43
E.5. Fuel Tank Level Sensor 3-44
SECTION F. COMMUNICATIONS/NAVIGATION SYSTEM 3-45
F.1. Whelen WPA Loudhailer 3-45
F.2. Motorola VHF-FM and UHF Astro XTL 5000 Transceivers and Control Heads 3-46
F.3. Motorola HF-SSB MCM3T Transceiver and Control Head 3-47
F.4. Furuno 8800S VHF-FM Transceiver 3-47
F.5. Furuno RDP149/NT Integrated Display 3-49
F.6. Radar Antenna 3-50
F.7. GP-37 WAAS/DGPS Receiver and Navigator 3-50
F.8. RD-30 Multi-Display 3-51

F.9. Magnetic Compass 3-52
F.10. PG-1000 Heading Sensor 3-53
F.11. Furuno ETR6/10N Depth Sounder 3-54
F.12. Ethernet Hub 3-54
F.13 ProTec Automatic Identification System 3-55
F.14. Antennas 3-56
F.14.a. Radar pod 3-56
F.15. Thermal Imaging System (optional) 3-58
F.15.a. Thermal Imaging Camera 3-58
SECTION G. ELECTRICAL SYSTEM 3-59
G.1. Alternators 3-59
G.2. Batteries 3-59
G.3. Battery Switches 3-61
G.3.a. Battery Isolators 3-62
G.3.b. Circuit Overload Protection 3-62
G.4. 12 VDC Distribution Panels 3-62
G.5. In-Line Fuses 3-64
G.6. Ground 3-64
G.7. 120/240 VAC Generator 3-65
G.8. Generator Control Panel 3-66
G.9. Generator Battery 3-67
G.10. Generator Cooling Water 3-67
G.11. Generator Filter and Fuel Shutoff 3-68
G.12. Generator Fire Port 3-68
G.13. Shore Power Connection 3-70
SECTION H. SEATING SYSTEM 3-71
H.1. Forward Cabin Seats 3-71
SECTION I. HEATING AND AIR CONDITIONING SYSTEM 3-73
I.1. Mechanical Unit 3-73
I.2. 20 Amp Breaker 3-74
I.3. Control Panel 3-74
I.4. Window Defrosters 3-75
SECTION J. WEAPONS MOUNTING/STOWAGE 3-77
J.1. Pedestal Stands 3-77
J.2. Machine Gun Elevation and Train Stop Limits 3-77
J.3. Ammunition Stowage 3-79
J.4. Weapon Locks/Mounts 3-79
SECTION K. HULL EXTERIOR LIGHTING 3-81
K.1. Searchlight 3-81
K.2. Light Switch Panel 3-82
K.3. Towlight Mast 3-85
SECTION L. ANCILLARY SYSTEMS AND FURNISHINGS 3-89
L.1. Windshield Wipers and Washer 3-89
L.2. Cabin Fans 3-89
L.3. Fire Extinguisher(s) 3-91

L.4. First Aid Kit 3-91
L.5. Gasoline Fume Detector 3-92
L.6. Carbon Monoxide Detector 3-92
L.7. Smoke Detector 3-93
L.8. Cabin Dome Lights 3-93
L.9. Horn 3-94
L.10. Miscellaneous Stowage 3-94
L.11. Emergency Position Indicating Radio Beacon 3-94

CHAPTER 4 CREW REQUIREMENTS 4-1

SECTION A. MINIMUM CREW 4-3
A.1. Certified Boat Crew Member 4-3
SECTION B. COXSWAIN 4-5
B.1. Authority and Responsibility 4-5
B.2. Relief of Responsibility 4-5
SECTION C. BOAT CREW MEMBERS 4-7
C.1. Certified Boat Crew Member 4-7
C.2. Additional Crewmembers 4-7
SECTION D. PASSENGERS 4-9
SECTION E. SAFETY EQUIPMENT 4-11
E.1. Personal Protective Equipment 4-11
E.2. Seat Belts, Helmets and Gunner Restraints 4-12
E.3. Boat Gunner Ensemble 4-13

CHAPTER 5 OPERATIONAL GUIDELINES 5-1

SECTION A. OPERATING PARAMETERS 5-3
A.1. Disabling Casualties 5-3
A.2. Restrictive Discrepancies 5-3
A.2.a. Reporting Restrictive Discrepancies 5-3
A.3. Major Discrepancies 5-4
A.4. Minor Discrepancies 5-4
A.5. Responsibilities 5-4
A.5.a. Disabling Casualty - Underway 5-4
A.5.b. Restrictive Discrepancy - Underway 5-5
A.5.c. Major Discrepancy 5-5
A.5.d. Minor Discrepancy 5-5
A.6. Environmental Limits 5-6
SECTION B. PERFORMANCE DATA 5-7
B.1. Fuel Consumption 5-7
B.2. Sea Keeping 5-8
B.2.a. Operating in Beam Seas 5-8
B.2.b. Operating in Following Seas 5-8
B.3. Stability 5-8

B.4. Speed 5-8
SECTION C. PERFORMANCE MONITORING 5-9
C.1. Performance Monitoring 5-9
C.2. Controls 5-9
C.3. Engine Gauges and Warnings 5-10
C.3.a. Gauge Operation 5-10
C.3.b. Speedometer Gauge Functions 5-11
C.3.c. Tachometer Gauge Functions 5-11

CHAPTER 6 MISSION PERFORMANCE 6-1

SECTION A. STARTING PROCEDURES 6-3
A.1. Pre-Start 6-3
A.2. Engine Starting 6-4
A.3. Energizing Equipment 6-4
SECTION B. UNDERWAY 6-5
B.1. Personal Protective Equipment 6-5
B.2. Communications 6-5
SECTION C. GOING ALONGSIDE BOATS AND TARGETS OF INTEREST 6-7
SECTION D. HANDLING CHARACTERISTICS 6-9
D.1. Characteristics 6-9
D.2. Characteristics 6-10
D.2.a. Turning on Plane 6-10
D.3. Buoyancy 6-10
D.4. Over-Acceleration 6-10
D.5. Beam Seas 6-11
D.6. Following Seas 6-11
D.7. Quartering the Seas 6-11
D.8. Maneuverability 6-12
D.9. Stern-To 6-12
SECTION E. OPERATING WITH HELICOPTERS 6-13
SECTION F. ANCHORING 6-15
SECTION G. TOWING 6-17
G.1. Angular Momentum 6-17
G.2. Alongside Towing 6-17
SECTION H. SECURING PROCEDURES 6-19
H.1. Procedure 6-19

CHAPTER 7 EMERGENCY PROCEDURES 7-1

SECTION A. CAPSIZING 7-3
A.1. Introduction 7-3
A.2. Prevention 7-3
A.3. Potential Causes 7-3
A.4. Precautions 7-4

A.5. Egress Hazards for SPC-LE Boat Crews 7-5
A.6. Egress Procedures 7-6
A.6.a. Egress Procedures with Doors/Windows Closed 7-7
A.6.b. Egress Procedures with Doors/ Windows Open 7-8
A.7. Post Egress Procedures 7-8
SECTION B. STEERING CASUALTY 7-9
B.1. Symptom(s) 7-9
B.2. Actions 7-9
SECTION C. LOSS OF CONTROL OF ENGINE RPM 7-11
C.1. Symptom(s) 7-11
C.2. Actions 7-11
SECTION D. LOSS OF FUEL PRESSURE 7-13
D.1. Symptom(s) 7-13
D.2. Actions 7-13
SECTION E. LOSS OF LUBE OIL PRESSURE 7-15
E.1. Symptom(s) 7-15
E.2. Actions 7-15
SECTION F. ENGINE HIGH WATER TEMPERATURE 7-17
F.1. Symptom(s) 7-17
F.2. Actions 7-17
SECTION G. DAMAGE TO COLLAR 7-19
G.1. Symptom(s) 7-19
G.2. Actions 7-19
SECTION H. NO POWER/INSUFFICIENT POWER TO COMMUNICATIONS/NAVIGATION EQUIPMENT 7-21
H.1. Symptom(s) 7-21
H.2. Actions 7-21

Appendices

APPENDIX A. OUTFIT LIST AND STOWAGE PLAN A-1
APPENDIX B. ENGINEERING AND CONFIGURATION CHANGES B-1
APPENDIX C. MATERIEL INSPECTION CHECKLIST C-1
APPENDIX D. DISABLING CASUALTIES D-1
APPENDIX E. RESTRICTIVE AND MAJOR DISCREPANCIES E-1
APPENDIX F. SPC-LE POWER TRIAL F-1
APPENDIX G. LIST OF ACRONYMS G-1

INDEX Index-1

List of Figures

Figure 2-1 SPC-LE Hull Construction 2-6
Figure 2-2 SPC-LE Outboard Profile 2-8
Figure 2-3 SPC-LE Inboard Profile 2-9
Figure 2-4 Anchor/Ammunition Locker 2-10
Figure 2-5 Cabin 2-10
Figure 2-6 Forward Cabin Window with Windshield Wiper 2-11
Figure 2-7 Sliding Cabin Door 2-12
Figure 2-8 Cabin Door Lock Release 2-12
Figure 2-9 Aft Cabin Windows and Weather-Tight Door 2-13
Figure 2-10 Spotter Windows 2-14
Figure 2-11 Cuddy Cabin Door 2-15
Figure 2-12 Battery Locker 2-16
Figure 2-13 Generator Compartment with Access Panel Open 2-17
Figure 2-14 HVAC Compartment with Access Panel Open 2-18
Figure 2-15 Port and Starboard Lockers 2-19
Figure 2-16 Engine Well Void Access 2-20
Figure 2-17 Bow Padeye 2-21
Figure 2-18 Standard Cleat 2-22
Figure 2-19 Forward Tow Bitt 2-23
Figure 2-20 Forward Gun Mount 2-23
Figure 2-21 Aft Tow Bitt and Gun Mount 2-23
Figure 2-22 Handrails 2-24
Figure 2-23 Transom Padeye 2-25
Figure 2-24 Side Deck Lighting 2-26
Figure 2-25 Forward Weather Deck LED 2-27
Figure 2-26 Aft Weather Deck LED 2-27
Figure 2-27 Lifting Eye 2-28
Figure 2-28 Navigation Light (Port) 2-29
Figure 2-29 Ring Buoy and Strobe Light 2-30
Figure 2-30 Towline Reel 2-31
Figure 2-31 Tow Reel Brake 2-32
Figure 2-32 Telescoping Boarding Ladder 2-33
Figure 2-33 Fuel Filters in Port Aft Deck Locker 2-35
Figure 2-34 Starboard Aft Deck Locker 2-36
Figure 3-1 Outboard Engines 3-3
Figure 3-2 Outboard Engine (Port Side) 3-4
Figure 3-3 Engine Power Head, Looking Aft 3-5
Figure 3-4 Engine Power Head, Starboard Side 3-6
Figure 3-5 Engine Power Head, Port Side 3-7
Figure 3-6 Engine Power Head, Looking Forward 3-8
Figure 3-7 Engine Power Head, Top View 3-9
Figure 3-8 Engine Oil Dipstick 3-11
Figure 3-9 Engine Oil Fill 3-11
Figure 3-10 Cooling System Indicator 3-12
Figure 3-11 Gearshift and Throttle Control 3-14
Figure 3-12 Gearshift/Throttle Touchpad 3-17
Figure 3-13 Key Switch Panels 3-18
Figure 3-14 Engine Gauges 3-19

Figure 3-15 Engine Tilt Switches 3-20
Figure 3-16 Power Tilt Switch and Flushing Connection 3-21
Figure 3-17 Manual Tilt Release Valve 3-22
Figure 3-18 Water Flush Connection 3-23
Figure 3-19 Tilt Lock Lever 3-23
Figure 3-20 Anode on Transom 3-24
Figure 3-21 Fuse Panel 3-25
Figure 3-22 Flo-Torq II System 3-26
Figure 3-23 Performance Fin and Lifting Strakes 3-28
Figure 3-24 Beaching Plate 3-28
Figure 3-25 Hull Construction Top View 3-30
Figure 3-26 Forward Weather Deck Drains 3-31
Figure 3-27 Forward Weather Deck Scupper 3-32
Figure 3-28 Aft Weather Deck Drain 3-32
Figure 3-29 Aft Weather Deck Scupper/Water Sock 3-33
Figure 3-30 Engine Well Drains 3-33
Figure 3-31 Cabin Drain Plug 3-34
Figure 3-32 Side Collar Attachment 3-36
Figure 3-33 Bow Cover 3-37
Figure 3-34 Steering Cylinders and Tie-Bars 3-40
Figure 3-35 Steering Hydraulic Pump 3-40
Figure 3-36 Fuel Tank Fill 3-42
Figure 3-37 Fuel Filters/Water Separators 3-43
Figure 3-38 Fuel Tank Top Service Center 3-44
Figure 3-39 Whelen Loudhailer Control 3-46
Figure 3-40 Motorola VHF-FM and UHF Marine Radios 3-46
Figure 3-41 Motorola HF-SSB Marine Radio Control Head 3-47
Figure 3-42 Furuno 8800S VHF-FM Transceiver 3-48
Figure 3-43 Furuno 8800S VHF-FM Transceiver Remote Control Head 3-48
Figure 3-44 Furuno Integrated Display 3-49
Figure 3-45 Radar Antenna 3-50
Figure 3-46 Helm Console 3-53
Figure 3-47 Heading Sensor 3-54
Figure 3-48 Depth Sensor 3-55
Figure 3-49 Automatic Identification System Transponder 3-55
Figure 3-50 Antennas 3-56
Figure 3-51 Radar Pod in Raised and Lowered Positions 3-57
Figure 3-52 Thermal Imaging Camera Mounting Platform 3-58
Figure 3-53 Thermal Imaging Camera 3-58
Figure 3-54 Thermal Imaging Camera Handheld Controller 3-58
Figure 3-55 Port Battery Locker 3-60
Figure 3-56 Battery Box Vent 3-60
Figure 3-57 12 VDC/120 VAC Main Power Panel 3-61
Figure 3-58 Battery Switches 3-61
Figure 3-59 12 VDC Distribution Panels 3-63
Figure 3-60 Console Wiring Access 3-64
Figure 3-61 Generator Access Panel and Blower Exhaust Vent 3-65
Figure 3-62 Generator Control Panel 3-66
Figure 3-63 Generator Battery Isolation Switch 3-67
Figure 3-64 Generator Cooling Water Piping 3-68
Figure 3-65 Generator Fuel Shutoff 3-69
Figure 3-66 Fire Port 3-69
Figure 3-67 Shore Power Connection 3-70
Figure 3-68 AC Power Distribution Panel 3-70

Figure 3-69 Cabin Seats 3-71
Figure 3-70 Heater/AC Unit 3-73
Figure 3-71 Heat and A/C 20 amp Breaker 3-74
Figure 3-72 Heat and A/C Control Panel 3-74
Figure 3-73 Window Defroster 3-75
Figure 3-74 Forward Gun Mount 3-78
Figure 3-75 Aft Gun Mount 3-78
Figure 3-76 Ammunition Stowage 3-79
Figure 3-77 Weapon Lock/Mount 3-80
Figure 3-78 Aft Weapon Lock Release Button 3-80
Figure 3-79 Searchlight 3-81
Figure 3-80 Searchlight Control 3-81
Figure 3-81 Light Switch Panel 3-83
Figure 3-82 Port Navigation Light 3-83
Figure 3-83 Starboard Navigation Light 3-83
Figure 3-84 Anchor/Masthead Light, Floodlights, Strobe Lights 3-84
Figure 3-85 Exterior (Deck Edge) Light 3-84
Figure 3-86 Interior (Deck Edge) Light 3-85
Figure 3-87 Tow Light Mast Stowed 3-85
Figure 3-88 Tow Light Mast 3-86
Figure 3-89 Tow Light Mast Cord Connection 3-87
Figure 3-90 Windshield Wiper Motor 3-90
Figure 3-91 Windshield Wiper Switches and Fan (A Class) Windshield Wiper Switches (B Class) 3-90
Figure 3-92 B-1 Type Fire Extinguisher 3-91
Figure 3-93 Gasoline Fume Detector 3-92
Figure 3-94 Carbon Monoxide Detector 3-92
Figure 3-95 Smoke Detector 3-93
Figure 3-96 Cabin Dome Light 3-93
Figure 3-97 Horn 3-94
Figure 3-98 EPIRB 3-95
Figure 5-1 Helm Console 5-9
Figure 5-2 Engine Gauges 5-10

List of Tables

Table 5-1 Fuel Consumption Information 5-7

This page intentionally left blank.

CHAPTER 1
Introduction

Introduction

This handbook contains information necessary for the safe and efficient operation of the Special Purpose Craft-Law Enforcement (SPC-LE). It defines operational capabilities, parameters, and emergency procedures. In addition, it shows or describes the fittings, outfit list, and physical characteristics of the boat.

In this chapter

This chapter contains the following sections:

Section	Topic	See Page
A	Warnings, Cautions, and Notes	1-3
B	Facility Manager	1-5
C	Changes	1-7
D	Action	1-9

This page intentionally left blank.

Section A. Warnings, Cautions, and Notes

Introduction

The following definitions apply to Warnings, Cautions, and Notes found throughout the handbook.

A.1. Warning

WARNING

To avoid personal injury or loss of life, operating procedures and techniques must be carefully followed.

A.2. Caution

CAUTION!

Operating procedures or techniques must be carefully followed to avoid equipment damage.

A.3. Note

NOTE

An operating procedure or technique is essential to emphasize.

This page intentionally left blank.

Section B. Facility Manager

Introduction

Commandant (CG-731) is the facility manager for the SPC-LE. The SPC-LE is a standard boat as defined in the *Boat Management Manual*, COMDTINST M16114 (series). Configuration control for these boats is critical for the standardization of equipment and safety of operations.

This page intentionally left blank.

Section C. Changes

Introduction

Commandant (CG-731) promulgates this handbook and its changes. Submit recommendations for changes to CG-731 via standard memo or electronic mail. For more information, contact CG-731, SPC-LE Facility Manager.

The address for CG-731 is:

Commandant (CG-731)
U.S. Coast Guard Headquarters
2100 Second Street, SW
Washington, DC 20593-0001

Attn: SPC-LE Facility Manager

C.1. Engineering Changes (ECs)

All engineering change (ECs) issued since the SPC-LE has been in service are provided in *Appendix B* of this handbook. ECs issued after the date of the release of this handbook supersede information in this handbook where applicable.

Station Key West is the primary unit responsible for evaluation of prototypes for all SPC-LE engineering changes.

This page intentionally left blank.

Section D. Action

Introduction

Operational, supervisory, maintenance support commands and boat crews will comply with procedures and limitations specified in this publication, and any duly issued changes.

D.1. Configuration Control

Configuration control for the SPC-LE is critical for standardization of equipment and safety of operations**.**

NOTE

To maintain fleet wide standardization, unit commanders shall not change or vary the type or location of equipment carried except where noted. Design or structural alterations are prohibited unless specifically authorized by CG-45 and CG-731.

NOTE

Prototype testing of the SPC-LE configuration changes may only be carried out with the specific authorization of CG-45 and CG-731.

This page intentionally left blank.

CHAPTER 2
Boat Characteristics

Introduction

This chapter describes standard features for the SPC-LE. The general location of the major hull and system components is presented in this chapter. Detailed information about hull and system components is provided in *Chapter 3, Boat Systems*.

NOTE

All illustrations in this operator's handbook are for familiarization only. The location of machinery and equipment in these illustrations may not accurately reflect proper placement and installation. Refer to the appropriate blueprint, NE-TIMS, technical publication or enclosure to this handbook for proper placement.

In this chapter

This chapter contains the following sections:

Section	Topic	See Page
A	General Description	2-3
B	Compartments	2-7
C	Fittings and Deck Equipment	2-21
D	Main Deck Stowage	2-35

This page intentionally left blank.

Section A. General Description

A.1. Design	The SPC-LE (**Figure 2-1** and **Figure 2-2**) is a deep-vee, rigid monohull with a blended polyurethane membrane collar that is reinforced with a woven polyester base cloth.
A.1.a. Hull and Deck	The hull and deck structures are constructed of marine grade aluminum and are welded using Metal Inert Gas (MIG) or Tungsten Inert Gas (TIG) welding techniques as required.
A.1.b. Walking Surfaces	Non-skid material is installed on the deck areas except that a 1 inch “no non-skid” area is provided around fittings, between non-skid pads, and around deck drains.
A.1.c. Cabin	The cabin is constructed of 5052 marine grade aluminum and is welded to the hull. The cabin provides shock-absorbing seating for the four crewmembers. A bench seat is also provided. The cabin has doors in the side and aft bulkheads. All boat systems operating controls are contained in the cabin. A small cuddy cabin, forward of the main cabin area, provides bench seating, access to electrical panels, and the forward deck area. A hinged radar pod and hinged communications antennas atop the cabin can be lowered to reduce air draft.
A.1.d. Collar	The collar is manufactured from closed cell polyethylene foam with an ultraviolet (UV) stable polyurethane coating that is reinforced with a woven polyester base cloth. The collar is attached to the outside of the hull and cannot lose buoyancy or absorb water.
A.1.e. Bow Post and Tow Post	An integral bow post and tow post are welded to the hull structure. Both posts may be used as gun mounting points.
A.2. Manufacturer	SPC-LEs are designed and manufactured by: SAFE™ Boats International 8800 Barney White Road Port Orchard, WA 98367

A.3. Missions

SPC-LEs are intended to operate from Coast Guard Boat Forces units and Marine Safety and Security Teams (MSSTs) with the following missions:

Defense Operations (DO)
Port Safety and Security (PSS)
Recreational Boating Safety (RBS)
Marine Environmental Protection (MEP)
Enforcement of Laws and Treaties (ELT)
Marine Safety and Security (MSS)
Search and Rescue (SAR)

NOTE

The SPC-LEs are not intended to be towed for operations. Trailering requirements exceed the capability of most units. State requirements for Commercial Driver's License (CDL), Wide Load limitations, and tow vehicle requirements must all be met.

A.4. Boat Specifications

The following provides a list of all SPC-LE boat specifications:

A.4.a. Physical Characteristics

Design Length of Hull	35 FT 5 inches (10.8 meters)
Length Overall (bow to lowered taffrail)	39 FT 8 inches (12.1 meters)
Beam Overall	10 FT 0 inches including collar (3.05 meters)
Operational Draft (DIW with engines vertical)	3 FT $5^1/_2$ inches (1.05 meter)
Draft, Engines Tilted Up (waterline to keel)	27 inches (0.68 meters)
Depth Finder offset	$14^1/_2$ inches (.368 meters)
Height of Portable Navigation Light Mast at 27 inches Hull Draft	14 FT 3 inches (4.34 meters)
Highest Fixed Point at 27 inches Draft (with radar pod folded down – thermal imaging platform, thermal imaging camera not mounted)	7 FT 7 inches (2.31 meters)
Crew Capacity (shock-absorbing cabin seats)	4
Passenger Capacity (sitting on benches and gunwales)	14
Seating - Total	8
Fuel Tank Capacity	300 gallons
Propulsion Machinery	Three Mercury Verado 275 HP, 4 stroke outboards
Propellers	14.625 x 19P, Mercury Revolution 4, 4 blade propeller

NOTE

All calculations in this handbook assume crew and passengers weigh 180 lbs each.

Boat Weight (fully outfitted, no crew)	13,700 lbs (approximate)
Boat Maximum Weight (fully outfitted, four crew, 14 passengers)	
Weight (fully outfit, fuel, trailer, no crew)	17,000 lbs (approximate)

WARNING

Even though the passenger capacity is 14, high speed or radical maneuvers should not be conducted with more personnel than there are available cabin seats or gunner restraint systems.

A.4.b. Operational Characteristics and Parameters

Maximum Speed	45 KTS at 6400 RPM
Cruise Speed	35 KTS at 4200 RPM
Maximum Range at Cruise Speed	250 NM
Maximum Operating Winds	30 KTS
Maximum Operating Seas	8 FT (no surf or breaking seas)
Maximum Towing Capacity	20 GWT or 50 FT LOA (preliminary)
Maximum Operating Distance Offshore	50 NM
Outside Air Temperature	0° to 105° F
Outside Water Temperature	28° to 95° F
Operation in Ice	None

WARNING

Operating the SPC-LE in ice conditions (including slush) may result in damage to the outboard engine, lower units and propellers, transducer, hull, and collar system. To avoid damage, do not operate the SPC-LE in any type of ice, including slush. If operating in or near ice becomes unavoidable, slow down to bare steerage and carefully reassess the need to continue the mission.

A.5. Hull Reference Points

The following reference points on SPC-LEs are frequently used (**Figure 2-3**):

Forward watertight bulkhead – Frame 19
Watertight collision bulkhead – Frame 17.35
Watertight console bulkhead – Frame 12.9
Forward tank frame – Frame 9.25
Frames are numbered aft to forward.

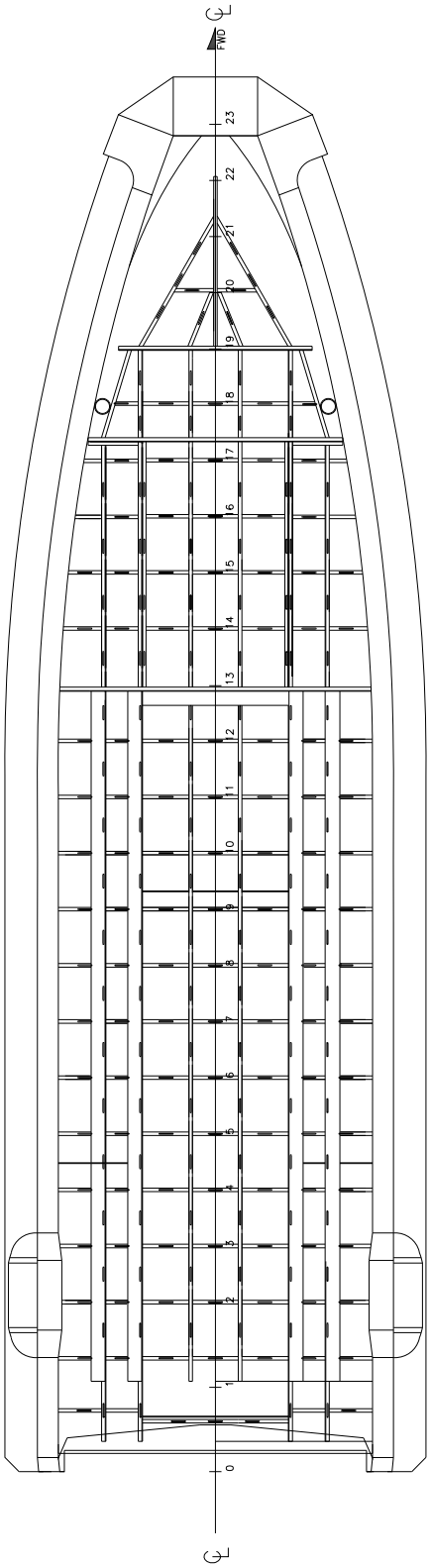

Figure 2-1
SPC-LE Hull Construction

Section B. Compartments

Introduction

The hull of the SPC-LE (**Figure 2-2** and **Figure 2-3**) is comprised of a single pressure-tested, airtight, welded compartment. A 300 gallon fuel tank, fabricated from ¼ inch 5086 aluminum and supported by rubber isolation mounts, is part of the hull's structure.

B.1. Anchor Locker

An anchor locker, with fabricated door (**Figure 2-4**), anchor tie-downs and drains, is located at the bow, forward of the bitt. The locker has drain holes that empty onto the forward weather deck. Storage shelves are built into the locker door to accommodate four boxes of 7.62 mm ammunition.

B.2. Cabin

The full width cabin (**Figure 2-5**) has seating for four crew with additional bench seating in the main and the cuddy cabin. Four pneumatic suspension seats are installed. Port and starboard sliding glass windows allow for air circulation and overhead tinted spotter windows allow for greater visibility. A hinged weather-tight door is built into the aft bulkhead. Two sliding doors are located on the port and starboard sides of the main cabin. An overhead hinged instrument panel (OHIP) holds secondary "Contura" switches for navigation and deck lighting. Two 12 VDC fans are mounted on the OHIP.

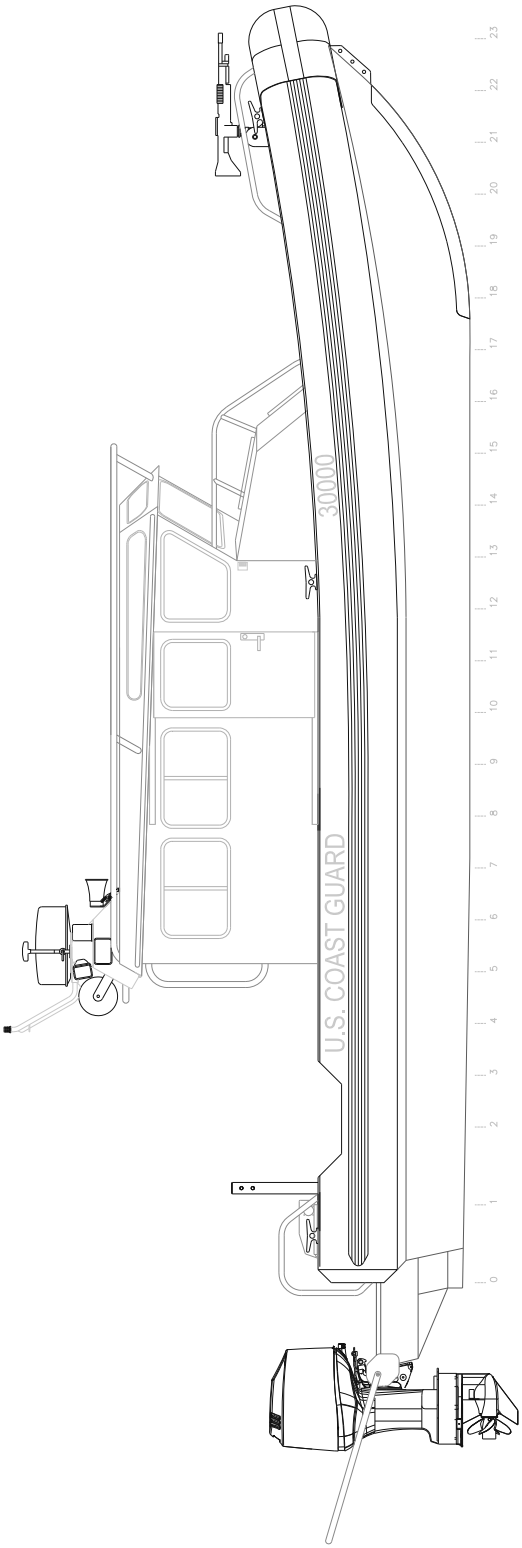

Figure 2-2
SPC-LE Outboard Profile

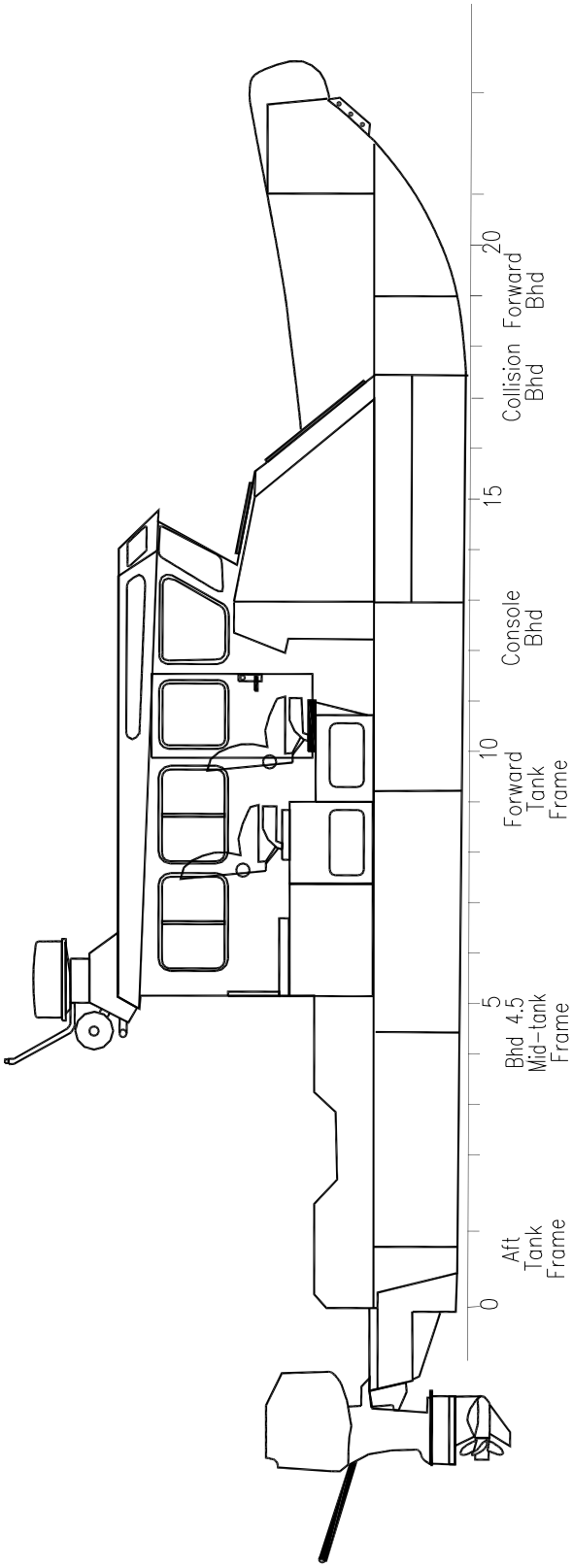

Figure 2-3
SPC-LE Inboard Profile

Figure 2-4
Anchor/Ammunition Locker

Figure 2-5
Cabin

B.2.a. Windows

The SPC-LE cabin has 17 windows.

B.2.a.1. Forward Facing Windows

The two forward facing windows incorporate windshield wipers and washers (**Figure 2-6**).

Figure 2-6
Forward Cabin Window with Windshield Wiper

B.2.a.2. Sliding Door Windows

Two windows (port and starboard) (**Figure 2-7**) are built into the sliding doors abeam of the helm chairs. The doors lock in the *open* position using an internal auto lock and slide mechanism that latches automatically. The lock release is built into the edge of the door (**Figure 2-8**).

Figure 2-7
Sliding Cabin Door

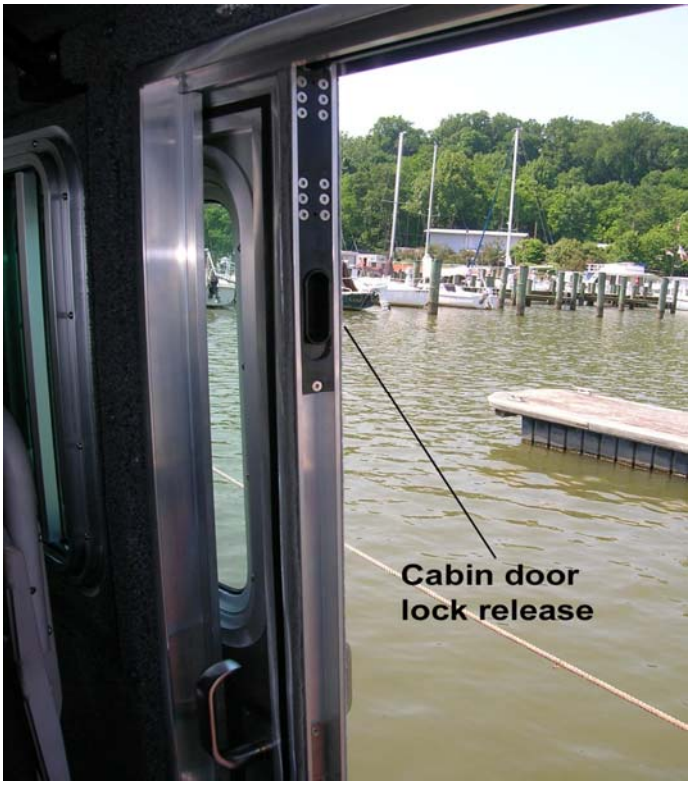

Figure 2-8
Cabin Door Lock Release

B.2.a.3. Combination Windows	Two combination (fixed/opening) windows, port and starboard, are aft of the sliding doors (**Figure 2-7**).
B.2.a.4. Aft Bulkhead Windows	Two aft facing windows (port and starboard) are on the aft bulkhead (**Figure 2-9**).
B.2.a.5. Weather-Tight Door Window	An aft facing window is built into the weather-tight door in the aft bulkhead (**Figure 2-9**).

Figure 2-9
Aft Cabin Windows and Weather-Tight Door

B.2.a.6. Tinted Spotter Windows

Four tinted spotter windows are built into the overhead on the SPC-LE cabin (**Figure 2-10**).

Figure 2-10
Spotter Windows

CAUTION !

The weather-tight door in the forward bulkhead of the cuddy cabin shall be secured after each use to prevent water intrusion.

B.3. Cuddy Cabin

A weather-tight door is located in the forward bulkhead of the cuddy cabin (**Figure 2-11**) leading to the forward weather deck. Bench seats are provided on the port and starboard side. A B-1 fire extinguisher is mounted on the bulkhead, starboard side. The starboard, aft side of the cuddy cabin has a curtained access to the console wiring, steering system fluid reservoir, and window washer fluid reservoir.

Figure 2-11
Cuddy Cabin Door

B.4. Battery Lockers

The batteries consist of four 12 VDC gel-cell type batteries (**Figure 2-12**) mounted in two "Troll Fury" battery boxes in the port and starboard lockers under the forward crew seats. The batteries are vented to the exterior to prevent accumulation of charging gasses. The port engine and house batteries are located under the port seat, the center and starboard engine and generator batteries are under the starboard seat.

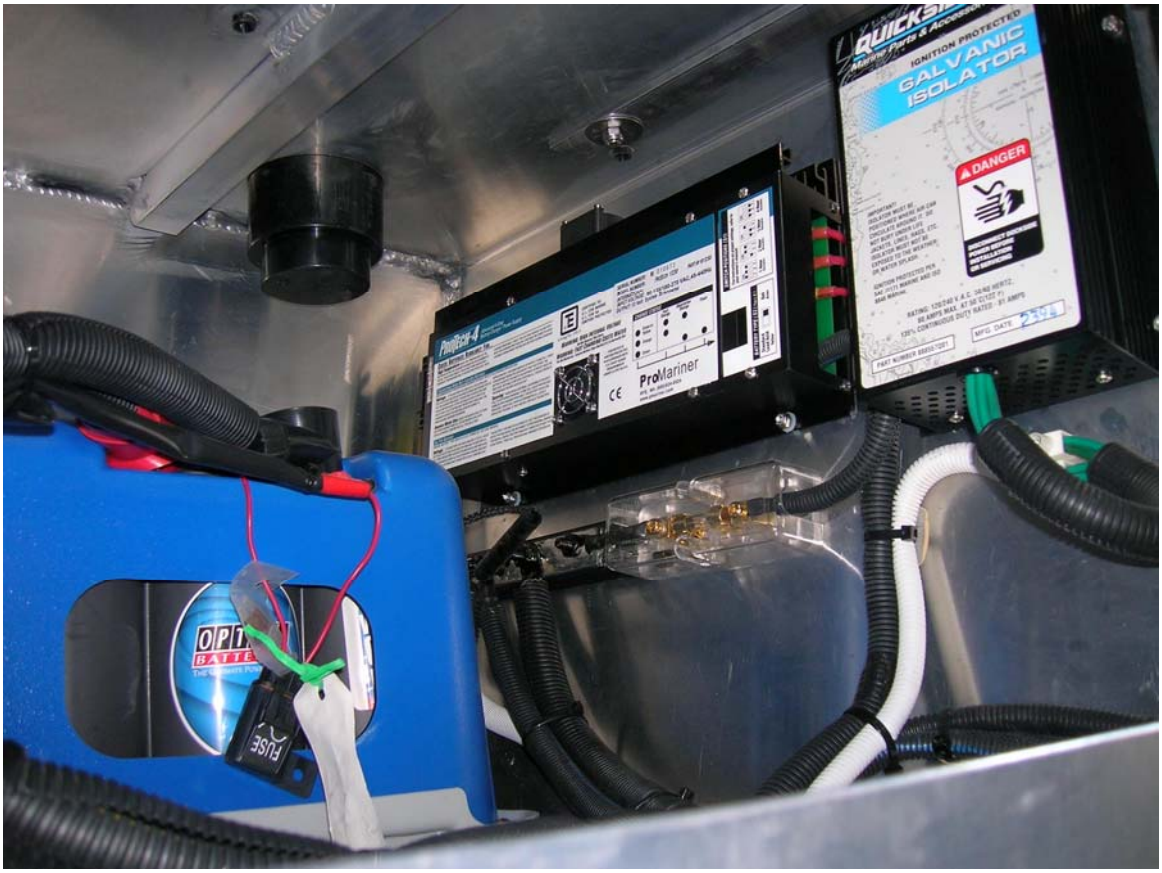

Figure 2-12
Battery Locker

CAUTION ! The ventilation opening in the generator access panel must not be blocked by equipment placed on the weather deck.

B.5. Generator Compartment

A non-tight access panel in the aft cabin bulkhead, starboard side, provides access to the generator from the weather deck (**Figure 2-13**). The compartment houses a gasoline-powered, 5 kW generator. On hulls 33101 thru 33116 access is gained thru the interior of the cabin, starboard side aft, under the bench seat.

Figure 2-13
Generator Compartment with Access Panel Open

B.6. Air Conditioner Compartment

A non-tight access panel in the aft cabin bulkhead, port side, provides access to the air conditioner from the weather deck (**Figure 2-14**). On hulls 33101 thru 33116 access is gained thru the interior of the cabin, port side aft, under the bench seat.

Figure 2-14
HVAC Compartment with Access Panel Open

B.7. Port and Starboard Aft Deck Lockers

Port and starboard lockers are located astern of the aft weather deck (**Figure 2-15**). The starboard locker contains a portable B-1 fire extinguisher, the tuner for the HF transceiver antenna, the generator exhaust muffler, and the generator cooling water intake strainer. The port locker contains three Racor fuel filters serving the three outboard engines, the generator fuel filter and a yellow-handle, quarter-turn shutoff valve for the generator fuel supply hose.

Figure 2-15
Port and Starboard Lockers

B.8. Engine Well/Void

A void space is located on centerline in the engine well. Access to this space is through a watertight manhole **(Figure 2-16**). The void houses the depth sounder transducer.

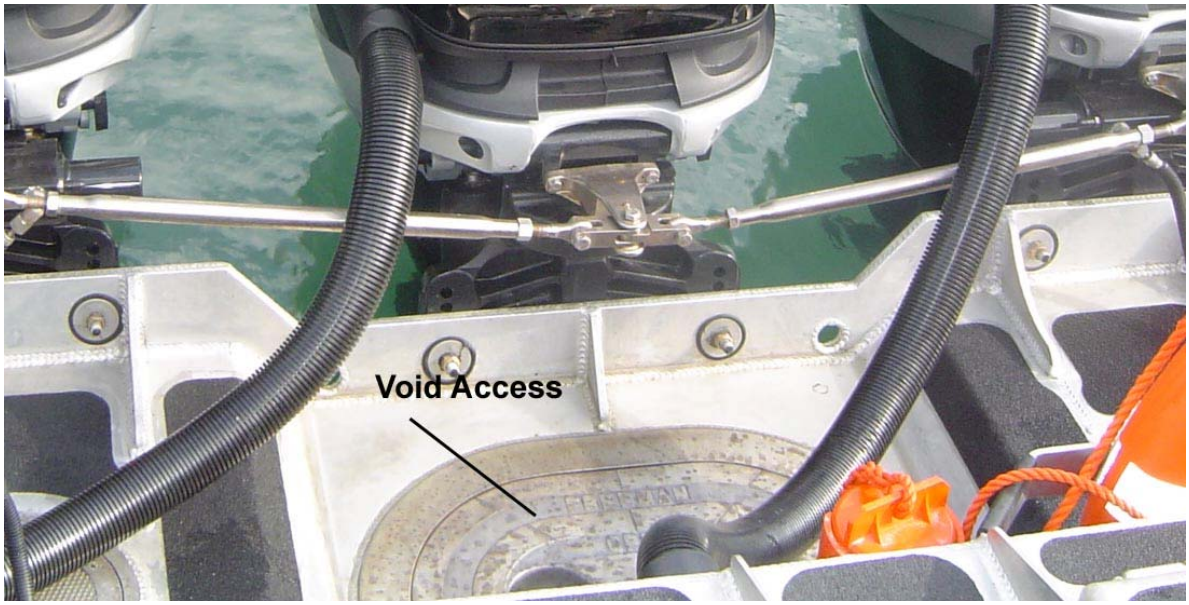

Figure 2-16
Engine Well Void Access

B.9. Cabin Dewatering Pump

The boat is outfitted with a portable, manual bilge pump rated at 10 strokes per gallon and 6 gallons per minute.

Section C. Fittings and Deck Equipment

Introduction

This section describes the location of fittings and deck equipment on the SPC-LE.

C.1. Bow Eye

An aluminum padeye is welded to the stem (**Figure 2-17**). The padeye has three holes, providing locations for the trailer winch hook and for the trailer safety chain.

Figure 2-17
Bow Padeye

C.2. Standard Cleats

Six 10 inch aluminum standard cleats (**Figure 2-18**) located port, starboard, forward, aft, and amidships are fully welded to the gunwale.

C.3. Tow Bitts

Two tow bitts with stainless steel Norman (cross) pins ((**Figure 2-19**) (forward)) and ((**Figure 2-21**) (aft)) are located forward and aft on centerline. Each bitt accommodates M-240B machine gun mounts (**Figure 2-20** and **Figure 2-21**).

Figure 2-18
Standard Cleat

Figure 2-19
Forward Tow Bitt

Figure 2-20
Forward Gun Mount

Figure 2-21
Aft Tow Bitt and Gun Mount

C.4. Handrails

A single horizontal handrail runs continuously port and starboard and around the front of the cabin. Two additional port and starboard handrails are located outboard of and below the continuous rail. Two vertical handrails are located port and starboard on the aft exterior cabin bulkhead. Two port and starboard vertical rails are located at the transom, outboard of the engines (**Figure 2-22**).

Figure 2-22
Handrails

C.5. Transom Eyes

Two welded aluminum padeyes (**Figure 2-23**), suitable for securing the SPC-LE to the trailer, are located port and starboard on the outboard sides of the engine well, above the waterline.

Figure 2-23
Transom Padeye

C.6. Non-Skid

The exterior decks are covered with non-skid pads. All non-skid edges are treated with edge seal. A 1 inch clearance is provided between the non-skid pads and deck fixtures, accesses, and openings.

C.7. Deck Lighting

The SPC-LE superstructure has four dimmable light emitting diode (LED) deck lights (**Figure 2-24**), mounted low on the port and starboard sides of the cabin exterior, to allow safe crew movements during night operations. Two LEDs provide illumination for the forward weather deck and are mounted port and starboard on the exterior bulkhead of the cuddy cabin hatch (**Figure 2-25**). Two are mounted on the forward bulkhead of the port and starboard aft lockers (**Figure 2-26**). Controls for all deck lights are located on the OHIP.

Figure 2-24
Side Deck Lighting

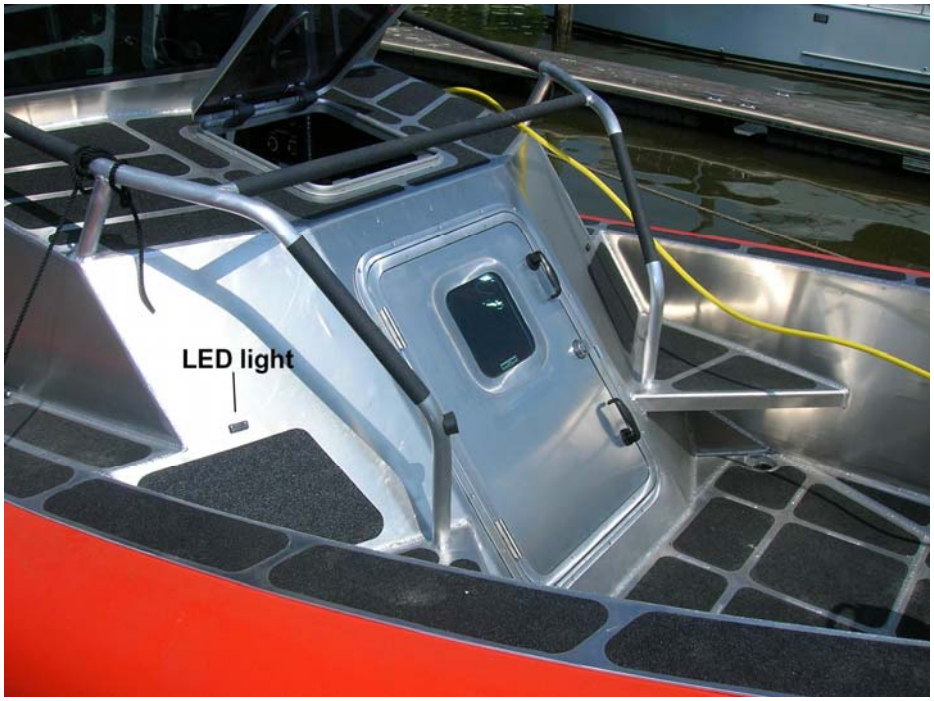

Figure 2-25
Forward Weather Deck LED

Figure 2-26
Aft Weather Deck LED

C.8. Lifting Eyes

SPC-LEs have four lifting eyes. Two are located above the anchor locker and two are located in the outboard engine well (**Figure 2-27**). Each eye is rated at 9500 lbs. Special slings, available from SAFE™ Boats International, should be used to lift the boat.

Figure 2-27
Lifting Eye

C.9. Navigation Lights

Port and starboard navigation lights (**Figure 2-28**) are mounted on the cabin above the forward windows. The lights are LED type.

Figure 2-28
Navigation Light (Port)

C.10. Ring Buoy and Strobe Light

A 24 inch ring buoy and strobe light (**Figure 2-29**) are mounted on the aft bulkhead of the aft deck lockers, on the port side of the engine well. The ring buoy is required to have 2 inch SOLAS grade retro reflective tape at four points equally spaced around the perimeter. Stencil "U.S. COAST GUARD" on the ring buoy's lower semi-circle and the boat number or station name (upper case) on the buoy's upper semi-circle in accordance with *Rescue and Survival Systems Manual* COMDTINST M10470.10 (series).

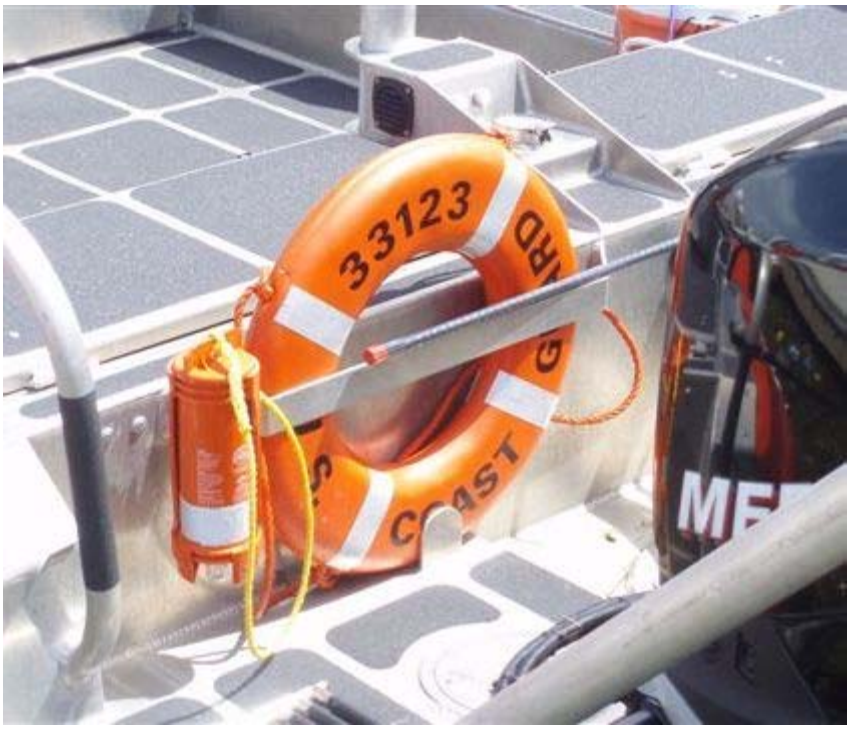

Figure 2-29
Ring Buoy and Strobe Light

C.11. Towline Reel

A fabricated towline reel (**Figure 2-30**) is mounted on the aft face of the radar pod. The reel is equipped with a manual, adjustable brake (**Figure 2-31**) and 300 FT of $^{5}/_{8}$ inch diameter double-braided nylon line, which can be used for towing or anchoring. The towline reel has a ball-lock pin to keep the reel from rotating in the frame.

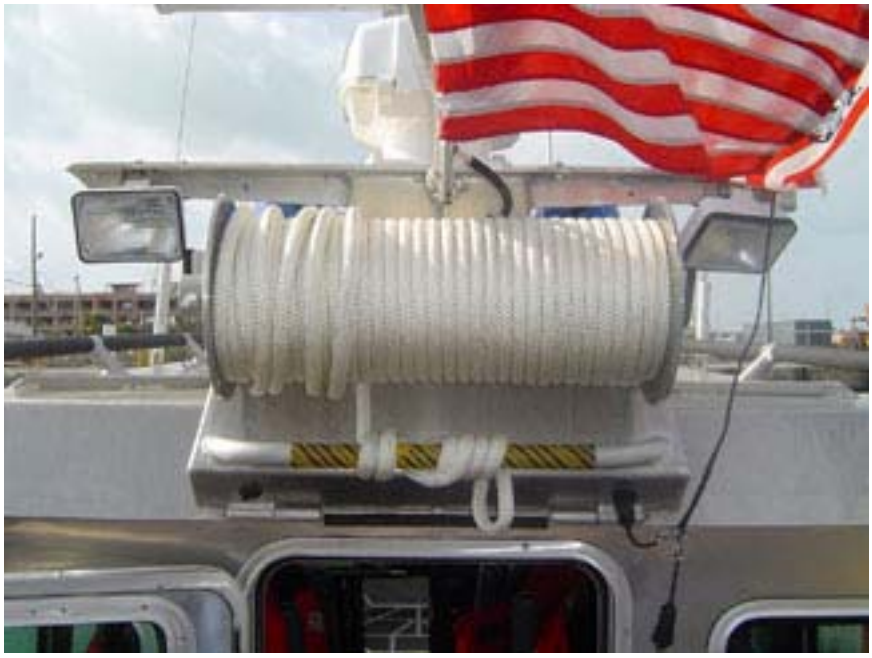

Figure 2-30
Towline Reel

Figure 2-31
Tow Reel Brake

C.12. Boarding Ladder

A telescoping boarding and dive ladder (**Figure 2-32**) is attached to the port side of the engine well.

Figure 2-32
Telescoping Boarding Ladder

This page intentionally left blank.

Section D. Main Deck Stowage

Introduction

This section describes the location and stowage of equipment on the main deck of the SPC-LE.

D.1. Anchor/ Ammunition Locker

An anchor/ammunition locker (**Figure 2-4**) with fabricated door, anchor tie-downs, and drain is located at the bow, forward of the bitt. The locker has drain holes that empty onto the forward weather deck. Drain water then passes out through the shell discharge tubes. Storage shelves are built into the locker door to accommodate four cans of ammunition.

CAUTION !

The port aft deck locker is not to be used for storage due to risk of damage to the fuel system components.

D.2. Port Aft Deck Locker

The port aft deck locker houses the fuel filters for the engines (**Figure 2-33**), the generator fuel filter, and a yellow-handle, quarter-turn shutoff valve for the generator fuel line.

Figure 2-33
Fuel Filters in Port Aft Deck Locker

D.3. Starboard Aft Deck Locker

The starboard aft deck locker (**Figure 2-34**) contains a portable B-1 fire extinguisher, the tuner for the HF transceiver antenna, the generator exhaust muffler, and the generator cooling water intake strainer.

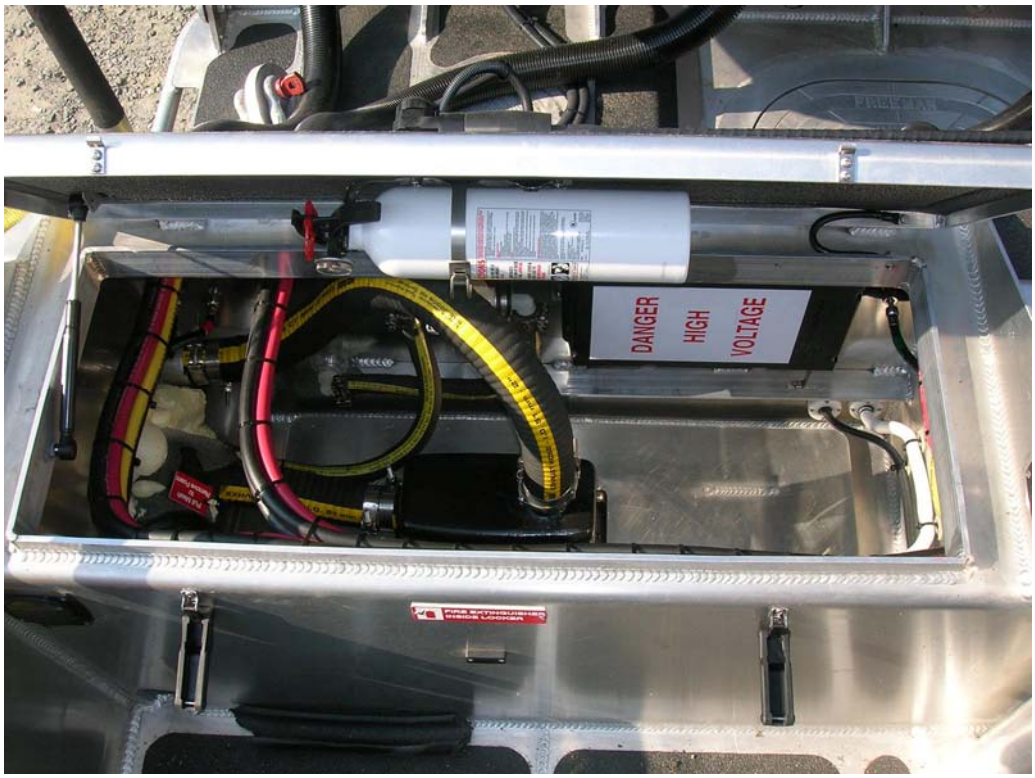

Figure 2-34
Starboard Aft Deck Locker

CHAPTER 3
Boat Systems

Introduction

This chapter discusses the boat's mechanical, electrical, and manual operating systems. It describes basic characteristics and provides information to allow the boat's crew to operate effectively.

In this chapter

This chapter contains the following sections:

Section	Topic	See Page
A	Propulsion System	3-3
B	Hull System	3-27
C	Collar System	3-35
D	Steering System	3-39
E	Propulsion Fuel System	3-41
F	Communications/Navigation System	3-45
G	Electrical System	3-59
H	Seating System	3-71
I	Heating and Air Conditioning System	3-73
J	Weapons Mounting/Stowage	3-77
K	Hull Exterior Lighting	3-81
L	Ancillary Systems and Furnishings	3-89

This page intentionally left blank.

Section A. Propulsion System

Introduction

The propulsion system for SPC-LEs consists of three, 275 HP, Mercury Verado outboard engines (**Figure 3-1**) mounted on the transom.

NOTE

All references to engine locations are taken standing behind the engine propeller looking forward.

CAUTION !

The static waterline, with the boat at rest and the engines in the operating position, must be below the "MAX STATIC WATERLINE" mark on the aft side of the engine. If this mark is submerged, boat trim or engine mounting must be adjusted to place the mark above the waterline

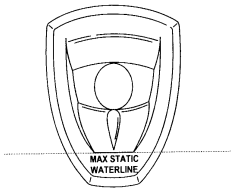

Maximum static waterline marker

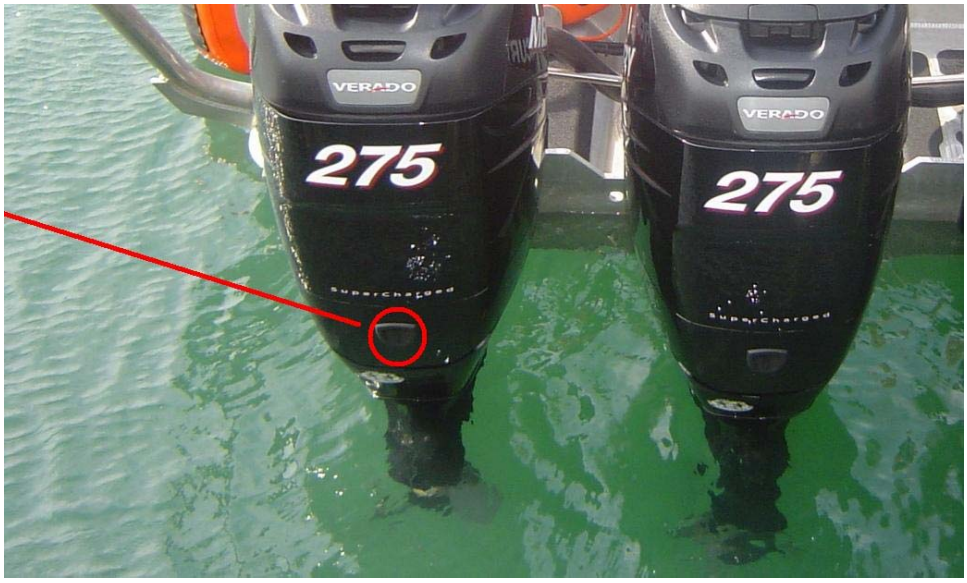

Figure 3-1
Outboard Engines

A.1. Engine

Each engine, rated 275 HP at 5800-6400 RPM, is a 4 stroke, supercharged, V6, water-cooled engine (**Figure 3-2**). Engine displacement is 158.5 cubic inches (2598 cubic centimeters) with a 3.23 inch bore and 3.23 inch stroke (82 by 82 millimeters). The operating weight of each engine is approximately 650 lbs. The arrangement of engine power head components is shown in **Figures 3-3, 3-4, 3-5, 3-6,** and **3-7.**

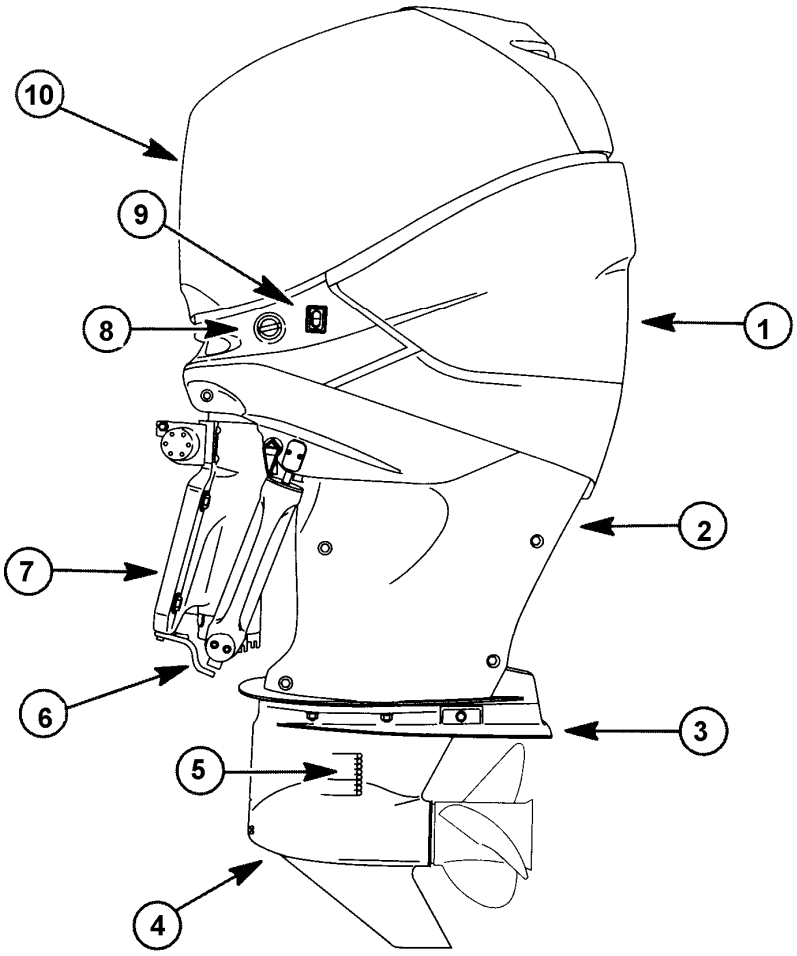

1. Rear cowl
2. Lower cowl chaps
3. Anti-ventilation plate
4. Gear Case
5. Cooling water intake holes
6. Spray plate
7. Pedestal
8. Engine flush
9. Auxiliary tilt switch
10. Top cowl

Figure 3-2
Outboard Engine (Port Side)

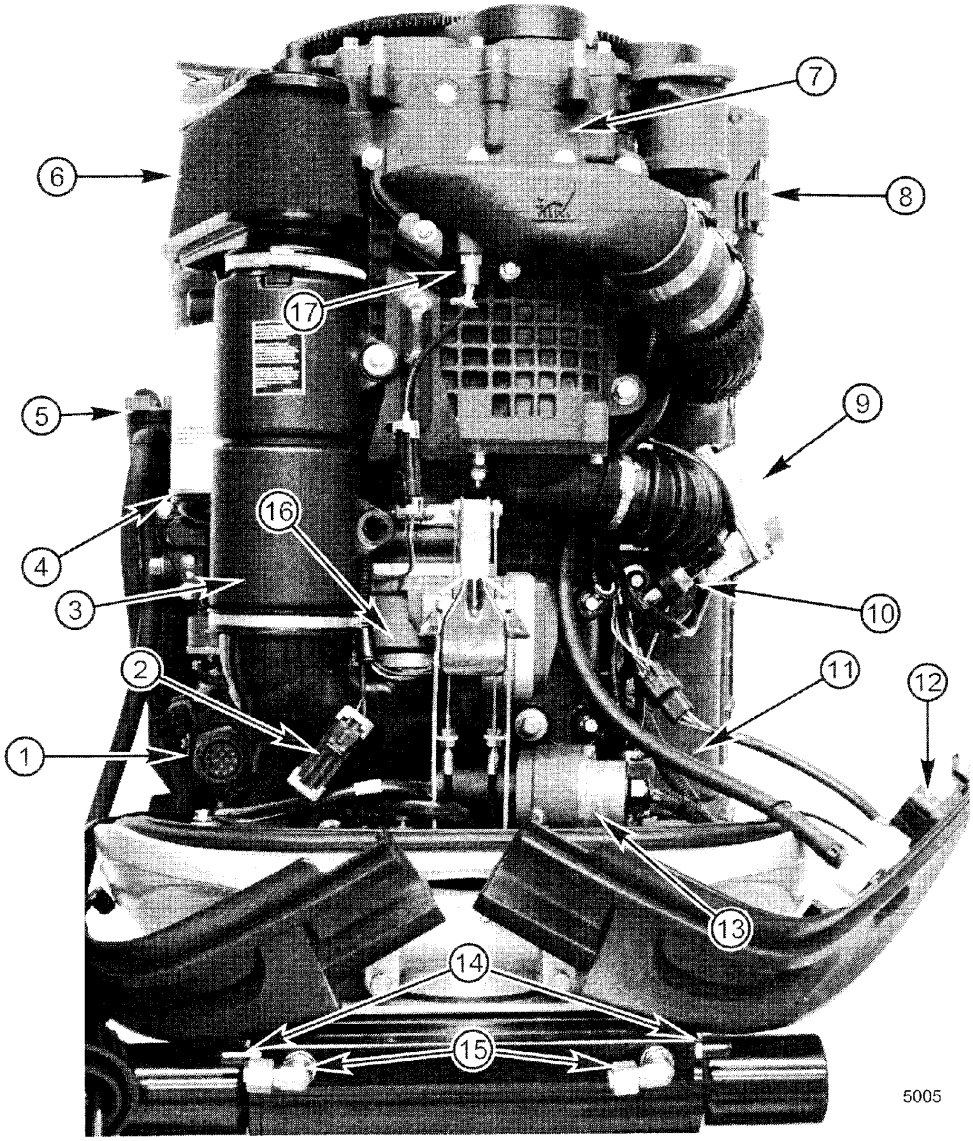

1. Engine harness connector, 14 pin
2. Shift position indicator harness
3. Resonator
4. Oil filter
5. Fuel filter
6. Air filter
7. Supercharger
8. Alternator
9. Electronic boost control assembly
10. Speedometer sensor
11. Fresh water flush hose
12. Cowl mounted tilt switch
13. Electronic shift control assembly
14. Steering cylinder bleed port
15. Steering cylinder hydraulic fittings
16. Electronic throttle control assembly
17. Supercharger boost air temperature sensor

Figure 3-3
Engine Power Head, Looking Aft

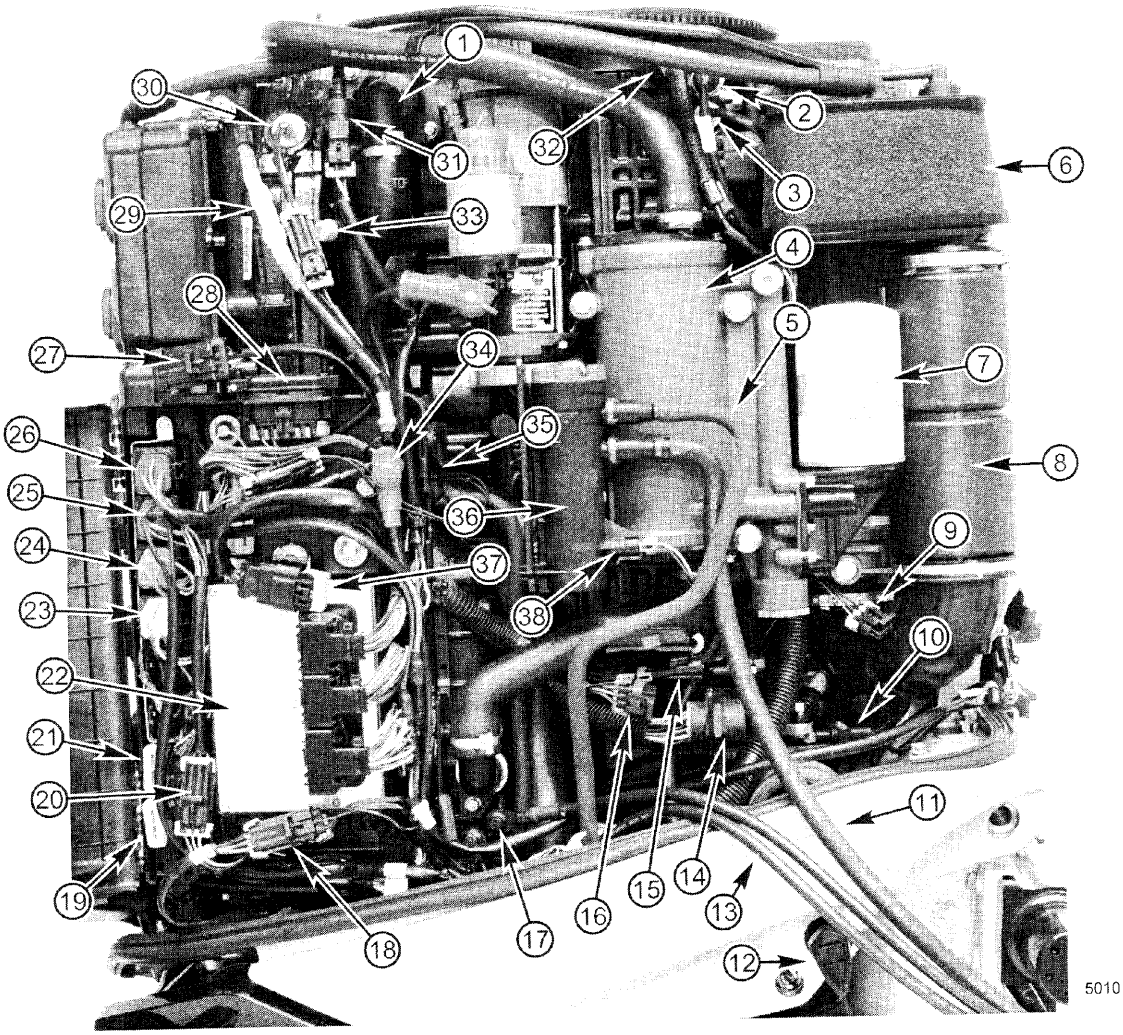

1. Thermostat housing
2. Oil pressure sensor
3. Oil temperature sensor
4. Integrated oil module
5. Fuel line to fuel system module
6. Air filter
7. Oil filter
8. Resonator
9. Power steering signal harness connector
10. Shift indicator switch
11. Fuel line (fuel in)
12. Tilt lock lever
13. Battery cable (+)
14. 14 pin engine harness connector
15. DTS power harness
16. Boat sensor harness
17. Battery cable (–) ground
18. Fuel system module harness connector
19. Splicesaver (red/yellow)
20. Trim wire harness connector
21. Splicesaver (red/orange)
22. PCM
23. Relay, starter
24. Relay, main power
25. Relay, trim down
26. Relay trim up
27. Diagnostic port 4 pin
28. Fuses
29. Fusible link, 150 amp
30. Cylinder head temperature sensor
31. Vent canister purge valve
32. Crank position sensor
33. FSM purge valve
34. Hot stud, battery (+)
35. Vent canister float switch
36. Fuel filter, 2 micron
37. CAN terminating resistor
38. Water separating sensor

Figure 3-4
Engine Power Head, Starboard Side

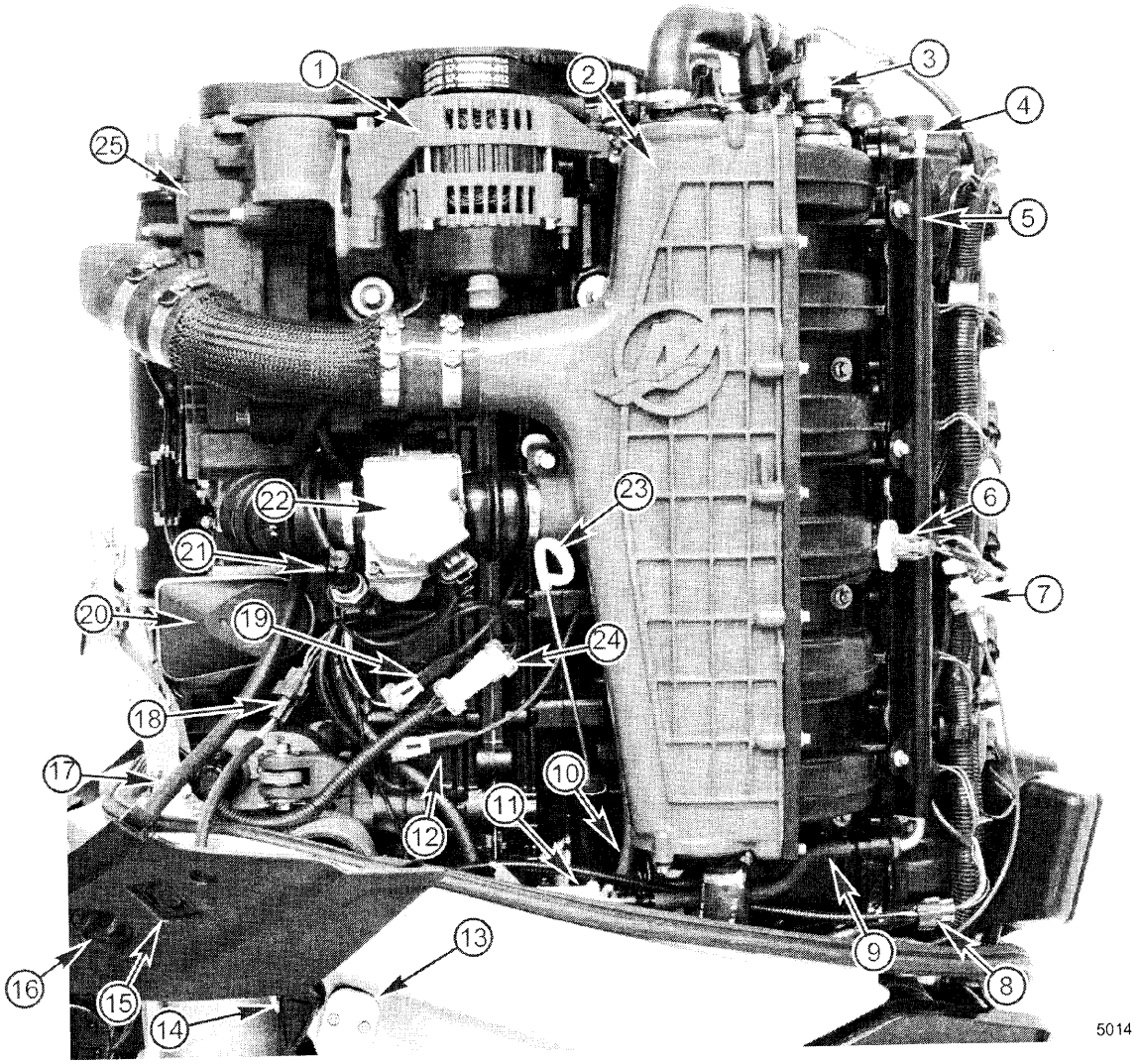

1 Alternator
2. Charge air cooler
3. Manifold absolute pressure sensor
4. Fuel pressure port
5. Fuel rail
6. Manifold air temperature sensor
7. Cylinder block water pressure sensor
8. Trim position sensor harness connector
9. Fuel inlet line to fuel rail
10. MAP reference line to FSM
11. Fuel filter, 20 micron
12. Lower knock sensor harness connector (black sleeve)
13. Trim position sensor
14. Tilt lock lever
15. Tilt switch
16. Fresh water flush inlet
17. Fresh water flush hose
18. Tilt switch harness connector
19. Upper knock sensor harness connector
20. Electronic throttle control assembly
21. Speedometer sensor
22. Electronic boost control
23. Oil dipstick
24. Electronic shift control harness connector
25. Supercharger.

Figure 3-5
Engine Power Head, Port Side

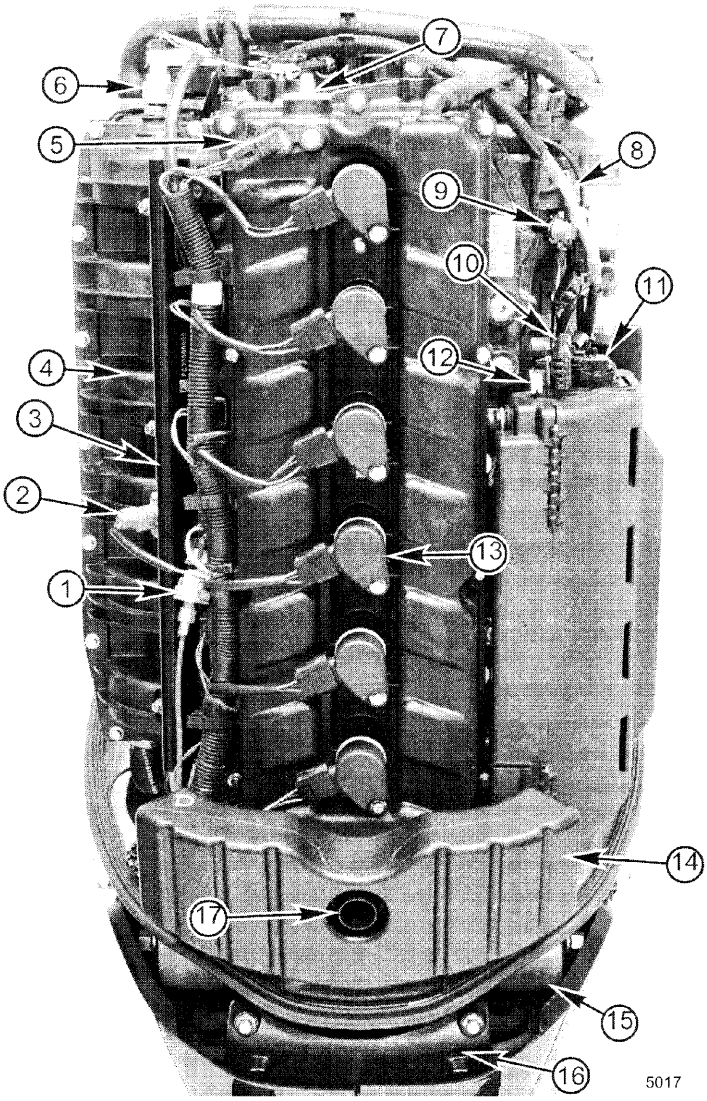

1. Block water pressure sensor
2. Manifold air temperature sensor
3. Fuel rail
4. Intake manifold
5. Cam position sensor
6. Manifold absolute pressure (MAP) sensor
7. Oil fill plug
8. Fusible link, 150 amp
9. FSM purge valve
10. Diagnostic port, 4 pin
11. Fuse holder
12. Fuse puller
13. Pencil coil
14. Plenum
15. Motor mount, rear
16. FSM protection cover
17. Exhaust relief

Figure 3-6
Engine Power Head, Looking Forward

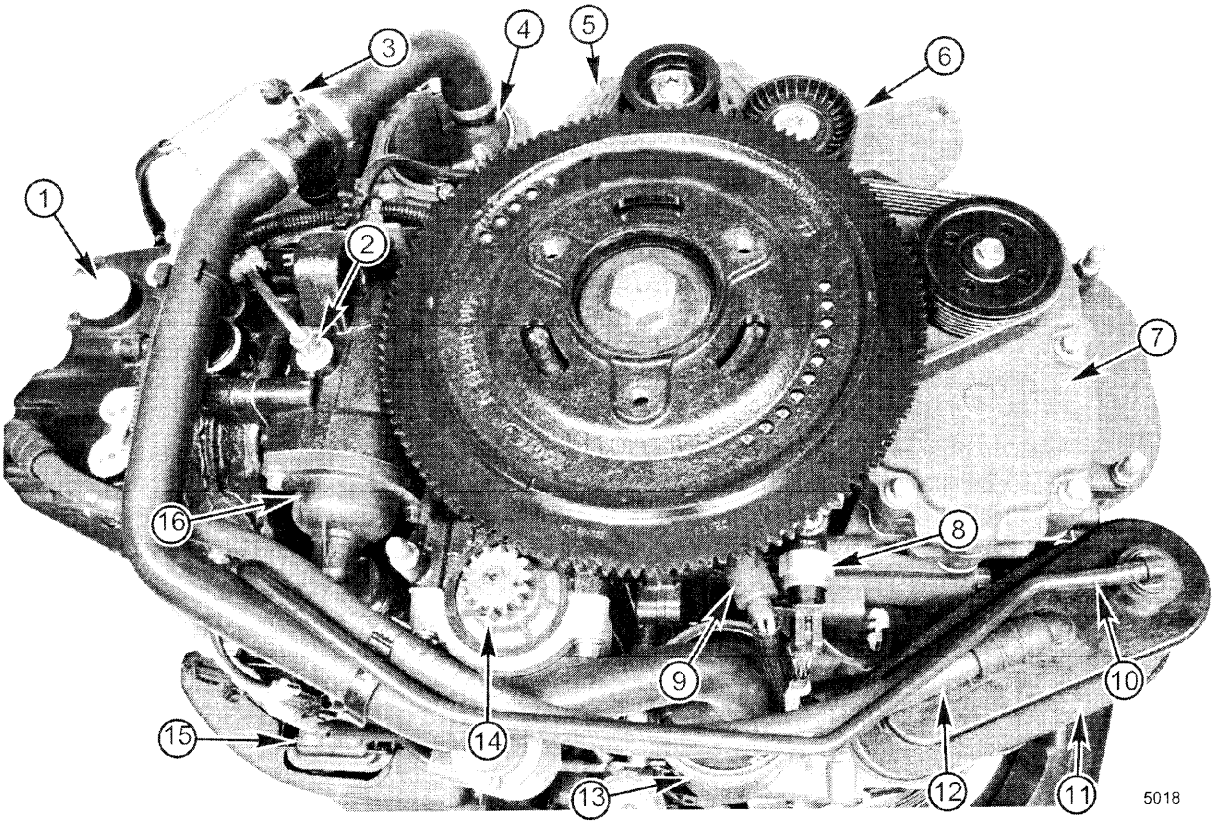

1. Oil fill plug
2. Cylinder block water temperature sensor
3. Manifold absolute temperature (MAT) sensor
4. Charge air cooler
5. Alternator
6. Belt tensioner
7. Supercharger
8. Oil pressure sensor
9. Crank position sensor
10. Vent canister purge valve hose
11. Air filter
12. Breather hose
13. Integrated oil module
14. Starter
15. Fuse holder
16. Thermostat housing

Figure 3-7
Engine Power Head, Top View

(Aft is to the left in this view)

A.2. Lubrication Systems

The engine oil system has a capacity of 7.4 U.S. quarts (7.0 liters) of Mercury or Quicksilver NMMA FC-W certified synthetic blend, SAE 25W40, multi-viscosity, 4 stroke outboard oil for general all-temperature use. If the recommended Mercury or Quicksilver oil is not available, a major brand of NMMA FC-W, 4 stroke outboard oil of similar viscosity may be used. The engine oil dipstick (**Figure 3-5** and **Figure 3-8**) is located under the top cowl on the port side of the engine. The oil filler cap (**Figure 3-7** and **Figure 3-9**) is located under the top cowl on the aft, top of the engine.

The oil drain plug is located on the port side of the engine above the anti-ventilation plate (**Figure 3-2**). The manufacturer recommends oil changes be accomplished using a hand pump inserted in the oil dipstick hole. A spin-on type, disposable oil filter is mounted on the starboard side of the engine block (**Figure 3-4**).

The gear case of the right-hand rotation engines (center and starboard) requires 32.8 fluid ounces (0.97 liters) of Mercury or Quicksilver High Performance Gear Lubricant. The gear case of the left-hand rotation engine (port) requires 30.4 fluid ounces (0.90 liters) of the same lubricant. The propeller must be removed to access the drain/fill plug at the "6 o'clock" position on the gear case. The gear oil vent plug, which must be removed during lubricant changes, is located on the starboard side of the engine directly below the anti-ventilation plate.

CAUTION !

Lubricating oil level should be maintained in the middle of the cross-hatched region of the dipstick. DO NOT add oil to bring the level to the top of the cross-hatched region.

NOTE

Tilt the engine up past vertical for one minute to allow trapped oil to return to the sump before checking oil level. Return engine to vertical (operating position) to check oil level. Check oil level only when the engine is cold or has not been run for at least one hour.

The oil level should be maintained in the middle of the cross-hatched range on the dipstick. See the Note above for the procedure to obtain accurate oil level measurements.

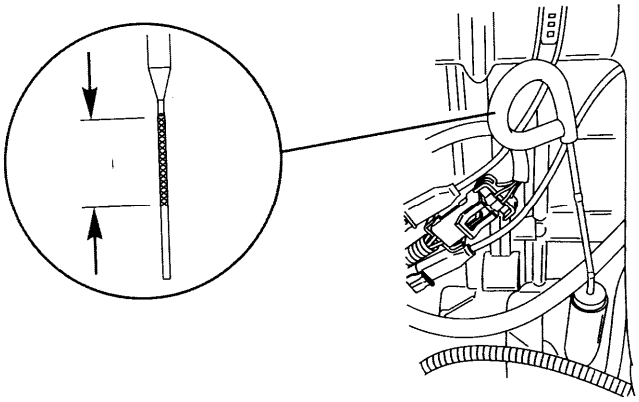

Figure 3-8
Engine Oil Dipstick

Figure 3-9
Engine Oil Fill

A.3. Engine Cooling System

The engine cooling system consists of an impeller type pump and thermostat mounted on the engine. Two cooling water intake holes (**Figure 3-2**) are located on the port and starboard sides of the lower outboard fairing directly above the gearbox. A stream of water flowing from the starboard side of the engine is a cooling water indicator (**Figure 3-10**) and shows that water is circulating through the engine cooling system.

Figure 3-10
Cooling System Indicator

CAUTION !

The fuel system requires unleaded 91 octane gasoline or higher. Fuels rated less than 91 octane reduce the power of the engine. Ethanol and methanol additives up to 10% can be used, but should be avoided whenever possible. See Section E of this chapter for more information concerning alcohol additives.

A.4. Engine Fuel System

An electric-powered, mechanical, fuel lift pump within each engine draws fuel from the fuel tank. Fuel from the fuel tank passes through a Racor fuel filter located in the port aft deck locker. Each engine has its own fuel line and Racor filter. The Racor filter acts as a water filter and strainer. Water and debris may accumulate in the bowl and the bowl must be periodically cleaned.

From the Racor filter, fuel is drawn through a 2 micron fuel filter/water separator located on the starboard side of the engine (**Figure 3-4**). When this filter/separator fills with water, the warning horn will sound four times every two minutes and a warning message will appear on the gauges.

Fuel then flows through the lift pump to a high-pressure fuel pump, which sends the fuel into the fuel rail. No primers are required in the fuel line.

Refer to the SPC-LE maintenance manual for the procedure for removing and cleaning the engine water separating fuel filter.

NOTE

The high-pressure fuel pump does not have a failure sensor. If the pump fails, there will be no alarm or fault message generated on the engine gauge. The engine will stop and will not run.

A.5. Ignition System

The ignition system is a fully transistorized battery ignition system with six spark plugs and six “pencil” ignition coils. Spark plugs specified by the manufacturer are NGK, part number ILFR6G. The spark plugs are located under the pencil coils (**Figure 3-6**).

A.6. Starter

A direct cranking starter is mounted on the starboard side of each of the engines (**Figure 3-7**). The starter requires 12 VDC and draws 160 amps under load.

A.7. Engine Controls

The gearshift and throttle control (**Figure 3-11**) for the engines is located on the outboard side of the helm panel. Each lever controls engine RPM and ahead or astern movement. Moving the throttle lever 35° from neutral selects the gear, forward or reverse, and further movement increases engine speed. The port throttle lever contains a power trim/tilt switch for all engines. The rocker-type switch, labeled UP and DN, changes the angle of the outboard engines to trim the boat for normal operation, shallow water operation, beaching, launching, and mooring.

Figure 3-11
Gearshift and Throttle Control

A.7.a. Engine Control Modes

The three engines are controlled through the two levers of the gearshift and throttle control. Lever functions vary depending on the combination of engines running. These functions are as follows:

Port Engine	Center Engine	Starboard Engine	Control Lever Function
Running	Running	Running	Port engine throttle and shift controlled by port control lever
			Starboard engine throttle and shift controlled by starboard control lever
			Center engine throttle = average of port and starboard engines
			Center engine shift = neutral unless both engines are in the same gear
Running	Running	Off	Port and center engine throttle and shift controlled by port control lever
Off	Running	Running	Starboard and center engine throttle and shift controlled by starboard control lever
Running	Off	Running	Port engine throttle and shift controlled by port control lever
			Starboard engine throttle and shift controlled by starboard control lever
Running	Off	Off	Port engine throttle and shift controlled by port control lever
Off	Off	Running	Starboard engine throttle and shift controlled by starboard control lever
Off with ignition key switch turned to On	Running	Off with ignition key switch turned to On	Center engine throttle and shift remain at neutral/idle unless both control levers are in the same gear

A.7.b. Outer Engine Casualty

If a casualty causes one of the outer engines into forced neutral/idle condition, or if an outer engine is turned off while underway, the center engine will go into forced neutral/idle.

Operation of the center engine can be restored by returning the lever of the functioning outer engine to neutral and then re-engaging. The center engine shift and throttle will then be controlled by the functioning outer engine.

A.7.c. Center Engine Casualty

A casualty that causes the center engine into forced neutral/idle condition, or turning off the center engine underway, has no effect on the operation of the outer engines.

A.7.d. Gearshift and Throttle Control Touchpad

The touchpad on the gearshift and throttle housing (**Figure 3-12**) has the following functions:

Neutral lights – light when the gearshift is in neutral. The lights flash when the engine is in throttle-only mode.

Troll button – allows the Coxswain to set the engine speed for slow speed cruising. Activate this feature by moving the control handles into the forward detent and depressing the Troll button. Use the – and + buttons to decrease or increase speed up to a calibrated set point. Turn off the feature by moving the control handles to neutral or a different position, or by pressing the Troll button.

Transfer button – does not have a function on the SPC-LE.

Dock button – reduces throttle capacity to approximately 50% of normal capacity. Turn the docking mode on and off by returning levers to neutral and pressing the button.

Throttle Only button – Allows increasing engine RPM for warm-up without shifting the engine into gear. Activate this feature by moving the control lever into the neutral position. Press the Throttle Only button while moving the control lever to the forward detent. The horn will sound once and the neutral light will start flashing. The horn will sound twice when the throttle only is engaged. Advance the throttle to increase RPM, up to a preset limit. To disengage, return the control lever to neutral position and press the Throttle Only button.

1 Lever button – Places throttle and shift control of all engines on the port control lever. Disengage by shifting to neutral and pressing the 1 Lever button.

Sync button – Pressing the button initiates engine synchronization. The Sync button light will be yellow. When engine speed is over 900 RPM for two seconds, below 95% throttle opening, and the levers are within 10% of each other, auto synchronization will take place and the yellow light will change to red.

Figure 3-12
Gearshift/Throttle Touchpad

A.8. Engine Key Switches

Three engine key switches are mounted forward of the gearshift and throttle control ((**Figure 3-13**). Each key switch is interlocked to allow engine starting only with the shift/throttle lever in *neutral*. Each key switch is labeled OFF-ACC-ON-START. The engine key should be turned to START *and then released.* This initiates an automatic engine crank and start cycle. If the engine fails to start, it will stop cranking automatically. Turn the key to start *and release it* until the engine starts.

A.8.a. Kill Switch

One engine kill toggle switch is installed on the side of the gearshift and throttle control panel (**Figure 3-13**). The engine kill switch clip must be inserted over the engine kill toggle switch. The kill switch clip is attached to a coiled lanyard with a 3-4 FT length, which is attached to the Coxswain's Personal Flotation Device (PFD) or boat crew survival vest. Should the Coxswain fall away from the controls, the engine(s) will immediately stop.

Figure 3-13
Key Switch Panels

A.9. Engine Gauges and Warnings

Four gauges are mounted on the helm console (**Figure 3-14**). One gauge displays boat speed. The other three gauges display engine RPM. The gauges monitor the critical sensors on the engines for any indications of problems. When a potentially damaging fault is detected, the system will reduce engine speed, sound the warning horn, and display a warning message on the gauge.

A.9.a. Gauge Operation

Each gauge will power up when the ignition is turned on. The gauges will stay on as long as the ignition is on.

When a problem is detected, the "SYS FAULT" message appears on the display. Press the "+" button to show the faulty component. The upper bar in the screen displays the system where the fault is located. The faulty component is described in the scrolling text. Press the "+" button again to display a detailed description of the fault. Press the "+" button again to display the required corrective action.

The alarm message will stay displayed until the "-" button is pressed. If there are multiple alarms, press the "MODE/SELECT" button to display them.

If the "MODE/SELECT" button is pressed to display a different screen, the flashing alarm signal "AL" will appear in the upper right corner to indicate there still is a problem.

See *Chapter 5, Section C, Performance Monitoring,* for a further description of gauge displays.

Figure 3-14
Engine Gauges

A.10. Power Tilt Switches

There are three engine power tilt switches. One is located on the port lever of the gearshift/throttle control, one on the helm console above the gearshift/throttle control, and one on the port cowl of each engine.

NOTE

To prevent galvanic corrosion of the aluminum hull, the outboard engines should be raised out of the water when the boat is moored for prolonged periods of time. During freezing temperatures, the engines should remain lowered to prevent freezing of any water in the gear case.

A.10.a. Gearshift/Throttle Power Tilt Switch

The gearshift/throttle power tilt switch is a rocker switch located on the port lever (**Figure 3-11**). This rocker switch controls the tilt of all three engines. This switch will function with the engine keys on and for 15 minutes after the engine keys are turned off.

A.10.b. Panel-Mounted Power Tilt Switches

Power tilt switches are located on the helm console, below the engine key switches (**Figure 3-15**). These switches control the tilt of individual or all engines. The engine key switch must be in the ON position before the engine can be tilted.

Figure 3-15
Engine Tilt Switches

A.10.c. Engine-Mounted Power Tilt Switch

The engine-mounted power tilt switch (**Figure 3-2**) is mounted on the port side of the engine cowl. The switch is used when the engine is stopped to raise the engine for mooring, or maintenance. This power tilt switch will operate with the ignition key switch in the OFF position.

Figure 3-16
Power Tilt Switch and Flushing Connection

A.11. Manual Tilt Release Valve

The manual tilt release valve allows tilting the engine if the power tilt feature is inoperative. The manual tilt release valve is located on the starboard side of the engine mounting bracket (**Figure 3-17**), on the bottom of the trim/tilt fluid reservoir. Turn the valve three turns counterclockwise, manually tilt the engine to the required angle, and retighten the valve to lock the engine in position.

CAUTION ! When lowering the engine, manually support the engine before opening the release valve.

CAUTION ! The release valve must be tightened before operating the engine to prevent the engine from tilting up during reverse operation.

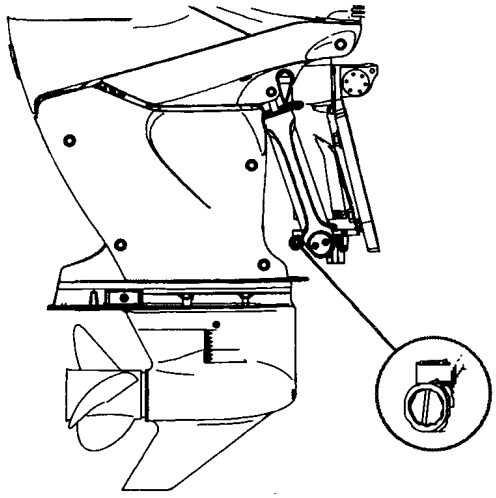

Figure 3-17
Manual Tilt Release Valve

A.12. Flushing Connection

An engine flushing connection (**Figure 3-2** and **Figure 3-3**) is located on the port side of the engine. Remove the flush connection from the cowl and connect a water hose (**Figure 3-18**). Run fresh water through the engine for 15 minutes, with the water valve about half open, to remove salt and mud from the cooling system. Flushing after each salt water use is recommended.

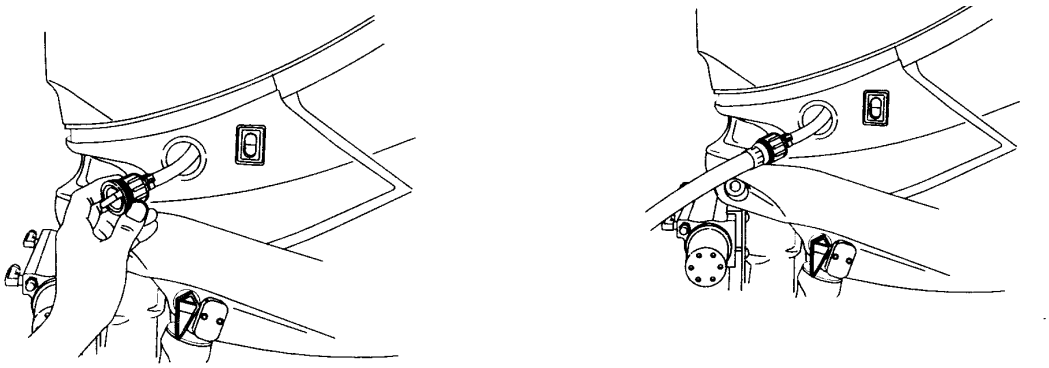

Figure 3-18
Water Flush Connection

A.13. Tilt Lock Lever

The tilt lock lever (**Figure 3-19**) is used to support the engine in the *fully raised* position. One lever is located on the port side of the engine cowling, about 10 inches below the power tilt switch. There is also a tilt lock lever on the starboard side of the engine (**Figure 3-4**).

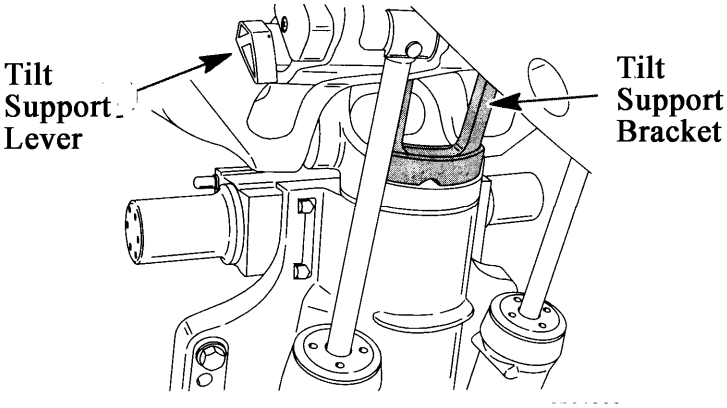

Figure 3-19
Tilt Lock Lever
(Port side shown)

A.14. Sacrificial Anodes

Sacrificial anodes are used to protect the hull and the outboard engines from corrosion. Two of the engine anodes are located on the gear case, one on the stern bracket, and two anodes are located on the bottom of each power tilt ram. The single hull anode is mounted on the transom (**Figure 3-20**).

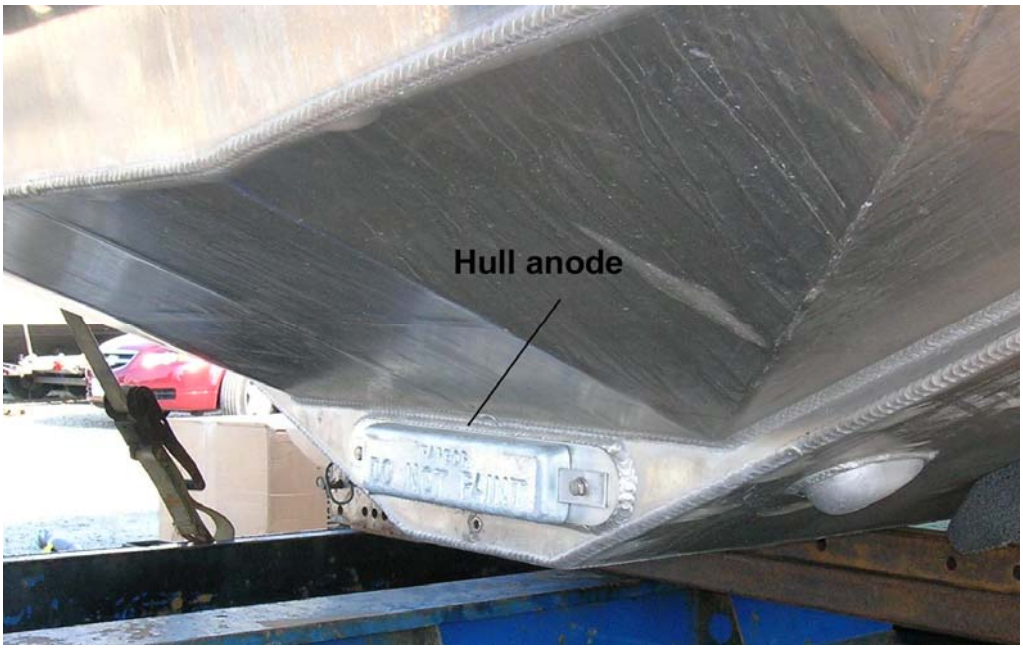

Figure 3-20
Anode on Transom

A.15. Engine Exhaust Port

The engine exhaust gases are discharged around the propeller shaft and through the hub of the propeller.

A.16. Fuse Panels

The fuse panel is located on the starboard side of the engine, under the cowl (**Figure 3-4**).

The fuse panel (**Figure 3-21**) houses 20 amp fuses for the engine electronic control, ignition coils, fuel pump and injectors. The panel also holds 3 spare 20 amp fuses.

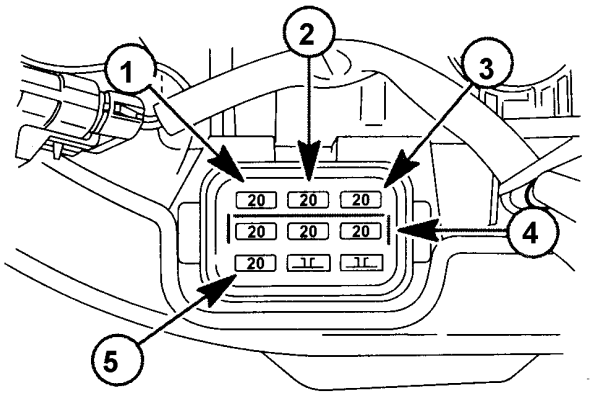

1 – Electronic Control Module and purge valve

2 – Ignition coils

3 – Fuel delivery

4 – Spare fuses and fuse puller

5 – Injector power and boost valve

Figure 3-21
Fuse Panel

A.17. Propellers

SPC-LEs utilize a stainless steel, 4 blade Mercury Revolution 4 propeller with a 14.625 inch diameter and 19 inch pitch. The starboard and center engines have right-hand rotation propellers. The port engine has a left-hand rotation propeller.

NOTE

The left- and right-hand rotation propellers ARE NOT interchangeable.

A.18. Flo-Torq Assembly

To protect the propeller, engine, and lower gear unit gears, SPC-LEs have the Mercury Marine Flo-Torq II propeller cushion hub kit (**Figure 3-22**) on the installed propellers. The hub kit reduces the shock on the lower unit gears and engine when shifting gears and absorbs shock if the propeller hits an object. The hub kit is a safety device designed to break down and slip under excessive torque loading. The cost of the sacrificial cushion hub replacement is relatively inexpensive when compared with expensive engine damage.

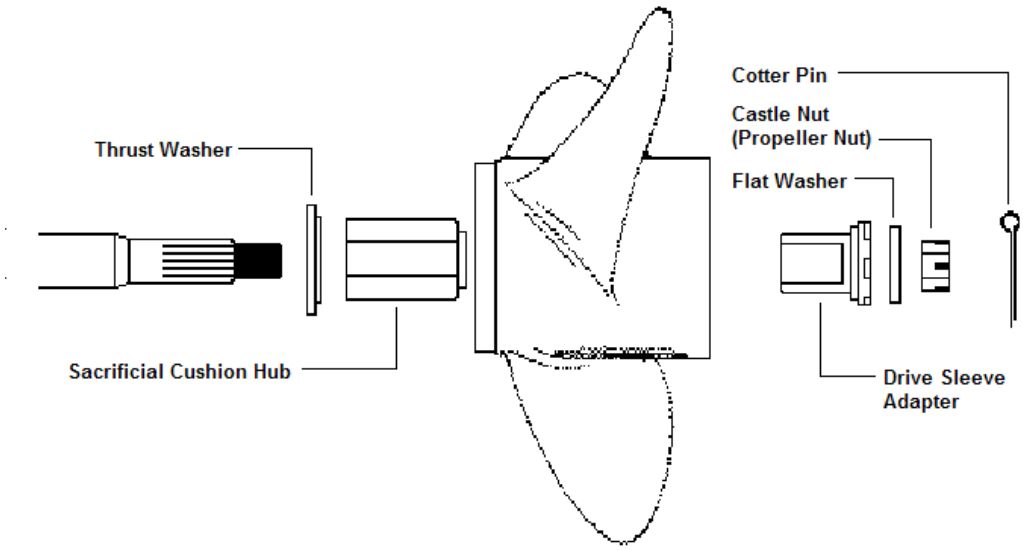

Figure 3-22
Flo-Torq II System

Section B. Hull System

Introduction

The SPC-LE hull is fabricated from 5086 marine grade aluminum. The hull design is a deep-vee monohull with a pointed bow and flat transom. The deadrise angle is defined as the angle between the baseline plane and the hull bottom, when measured perpendicular to the boat's centerline, and is 25° at the transom. The hull consists of $^{1}/_{4}$ inch thick 5086 marine grade aluminum bottom plating. The side plating is $^{3}/_{16}$ inch thick 5086 marine grade aluminum. The deck is 0.160 inch thick aluminum plate. The boat has a fixed fender system to protect the exterior of the hull during alongside work. The boat's hull has sufficient buoyancy and stability to float level if swamped.

CAUTION !

To prevent galvanic corrosion of the aluminum hull, the outboard engines should be raised out of the water when the boat is moored for prolonged periods of time. During freezing temperatures, the engines should remain lowered to prevent freezing of any water in the gear case.

NOTE

With the engines trimmed to the maximum depth and the boat making no headway, the draft is 3 FT $5^{1}/_{2}$ inches.

B.1. Draft

The hull's deepest draft with the engines raised is 2 FT 3 inches. The deepest point of the bottom is at the collision bulkhead with the boat at 0° trim.

B.2. Sound Insulation

A layer of two-part, maintenance free, polyurethane foam covers the bottom 4 - 10 inches of the hull interior. The foam is flame retardant and complies with ASTM flame spread requirements. The foam's main purpose is to provide sound insulation. No polyurethane foam is installed directly below the fuel tank in the bilge area.

B.3. Performance Fins

The performance fins (**Figure 3-23**) are located port and starboard below the aft portion of the collar. They provide lift upon acceleration and create a vacuum for stabilization during turning.

B.4. Lifting Strakes

The hull contains four full-length lifting strakes (**Figure 3-23**) on each side of the V bottom hull to improve sea keeping, directional stability, and planing performance.

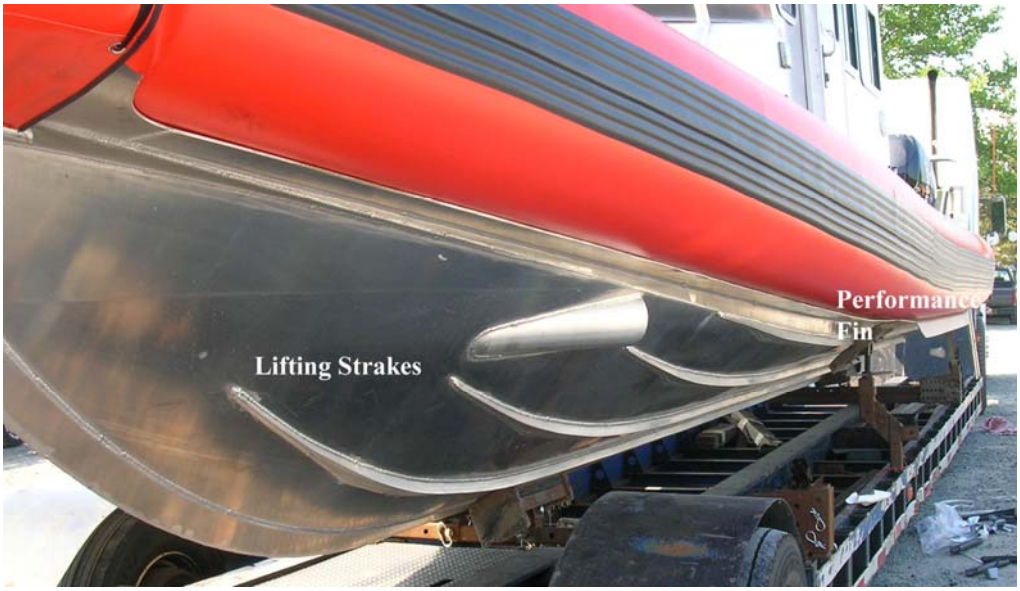

Figure 3-23
Performance Fin and Lifting Strakes

B.5. Beaching Plate

A $^{5}/_{16}$ inch 5086 marine grade aluminum beaching plate (**Figure 3-24**) is welded to the keel along the forefoot to provide additional protection to the hull.

Figure 3-24
Beaching Plate

B.6. Inspection Access	The SPC-LE has a watertight, self-bailing deck. Three $^{1}/_{2}$ inch inspection plugs are located in the cuddy cabin deck. These can be used for borescope access for internal inspection.
B.7. Diagonal Stiffeners	The $^{1}/_{4}$ by 3 inch diagonal stiffeners (**Figure 3-25**), spaced 12 inches apart, are designed to efficiently disperse impact energy. This unique herringbone framing directs impact energy along its natural course of flow.
B.8. Hull Access Plug	The hull access plug is located forward of the transducer in the step. This can be used for hull draining and borescope access.

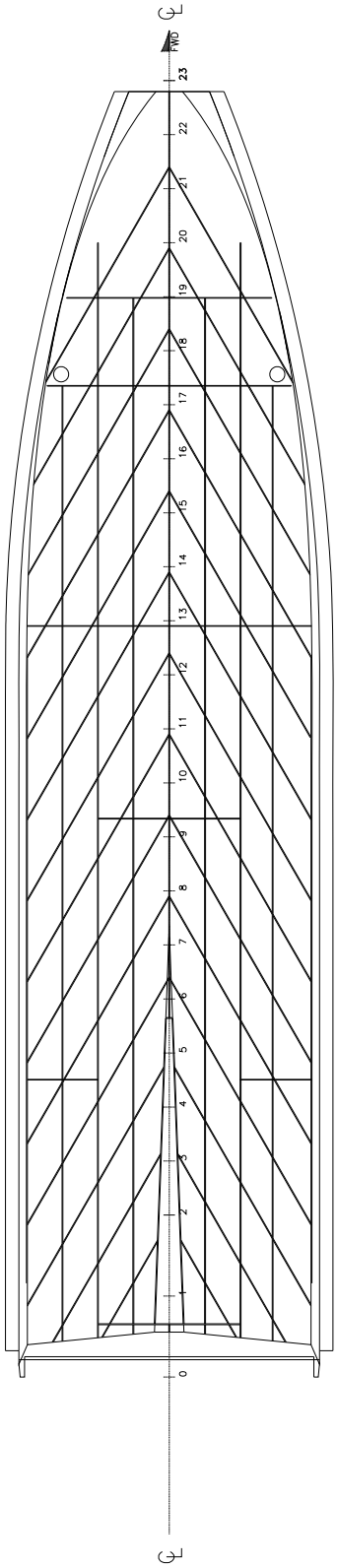

Figure 3-25
Hull Construction Top View

B.9. Deck Drains and Scuppers

There are six deck drains and four scuppers as follows:

2 anchor locker drains
2 forward weather deck scuppers
2 aft cabin drains
2 aft weather deck scuppers
2 engine well drains

B.9.a. Forward Cabin Deck Drains

Two 4 inch diameter drains are located in the aft, outboard corners of the forward weather deck, just forward of the cuddy cabin door (**Figure 3-26**).

Figure 3-26
Forward Weather Deck Drains

B.9.b. Forward Cabin Deck Scuppers

The forward weather deck drains interface with scoop type scuppers (**Figure 3-27**) under the hull to allow water taken over the side to drain from the boat.

Figure 3-27
Forward Weather Deck Scupper

B.9.c. Aft Weather Deck Drains

Two 3 inch diameter drains are located in the lower outboard corners on the forward bulkhead of the aft storage lockers (**Figure 3-28**). These drains allow water on the aft weather deck to drain through the scupper/water socks (**Figure 3-29**) mounted on the transom.

Figure 3-28
Aft Weather Deck Drain

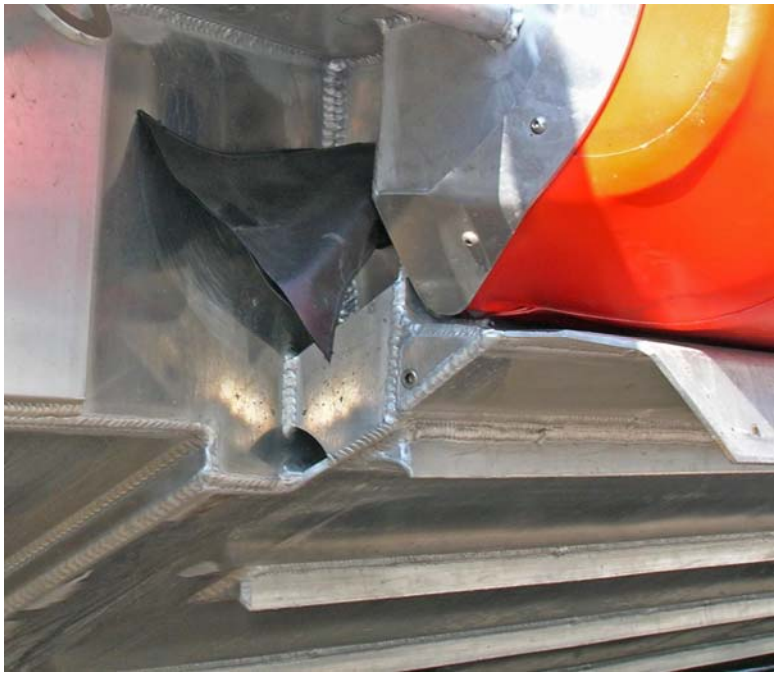

Figure 3-29
Aft Weather Deck Scupper/Water Sock

B.9.d. Engine Well Deck Drains

The engine well deck is drained using two round openings in the transom, outboard of the center engine, just above the deck level (**Figure 3-30**).

Figure 3-30
Engine Well Drains

B.9.e. Cabin Drain Plugs

Two drain plugs are located in the aft corners of the cabin bulkhead (**Figure 3-31**). These allow water to be drained from the cabin onto the aft weather deck and overboard through the aft weather deck scuppers.

Figure 3-31
Cabin Drain Plug

Section C. Collar System

Introduction

The patented SAFE™ (Secured Around Flotation Equipped) collar system is designed to provide flotation, fendering, and stability. The system uses a 1.3 lbs per cubic foot closed cell polypropylene foam shaped to the required geometry. The foam does not inherently absorb or retain water. The foam is inserted into a 50 oz. per square yard blended polyurethane membrane collar that is reinforced with a woven polyester base cloth. Damaged sections can be easily repaired or replaced as necessary.

The upper surface of the collar is protected by an aluminum flange, which protects it from damage.

C.1. Attachment

The water-contacting surface of the collar is protected by an aluminum performance fin, which protects it from damage and enhances the handling characteristics. The fendering system is attached as shown in **Figure 3-32**.

The collar bow section is outfitted with a protective cover (**Figure 3-33**) equipped with a rub strake.

SPC-LE XDR Collar System

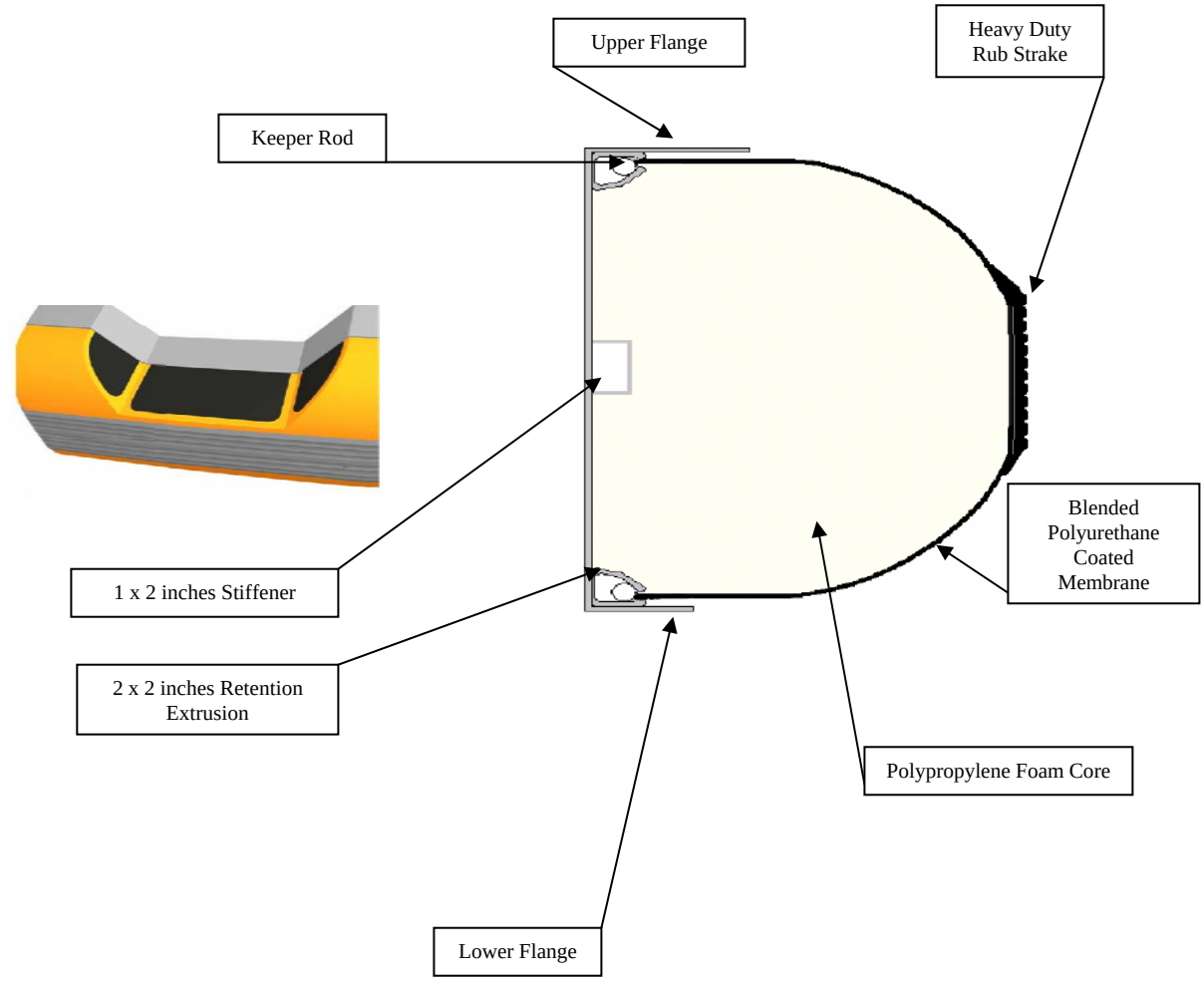

Figure 3-32
Side Collar Attachment

Figure 3-33
Bow Cover

CAUTION !

The daily checkoff sheet requires a thorough inspection of the collar. Immediately repairing any damage that penetrates the polyurethane coating (skin) is critical. Failure to do so may result in further damage to the area requiring extensive repair.

WARNING

In accordance with ALCOAST 543-94, sanding of collars puts personnel at risk to airborne lead particle exposure. To minimize risk, PSX-7000 shall be applied to collars without abrading the existing surface coating.

C.2. Repair and Removal

Minor repairs are easily completed within 24 hours. Repair procedures for both repair and removal are posted on the SAFE™ Boats International website.

This page intentionally left blank.

Section D. Steering System

Introduction

The steering system is an integrated system made up of three major components as follows:

Hydraulic steering cylinders on the port and starboard engines.
A tie bar assembly connecting the center engine to the port and starboard engines.
A hydraulic pump assembly at the helm wheel.

CAUTION !

Never use brake fluid in the steering system. Use of non-specified fluids may cause irreparable damage and steering system failure.

The hydraulic system operates on SAE 0W30 synthetic power steering fluid.

D.1. Hydraulic Steering Cylinder

The steering cylinders (**Figure 3-34**) are a front mount system that allows for tri-engine independent tilt. It allows for easy steering due to its hydraulics and it has a five-turn lock-to-lock response. Each has an in-and-out port that accepts the hydraulic lines that lead to and from the helm.

D.2. Tie Bar Assembly

The installed tie bar system (**Figure 3-34**) is the Mercury Verado-specific tie bar kit. The purpose of the tie bar is to provide equal, uniform directional control of the engines, but to not interfere with independent trim, tilt and throttle.

D.3. Hydraulic Pump Assembly

The hydraulic pump assembly is mounted in the console and accessed from the cuddy cabin (**Figure 3-35**). The pump provides fluid under pressure to valves controlled by the helm wheel. Turning the wheel allows fluid to flow to the steering cylinders on the engines. Power for the pump comes from three engine battery switches.

Figure 3-34
Steering Cylinders and Tie-Bars

Figure 3-35
Steering Hydraulic Pump

D.4. Hoses

Hydraulic hoses connect the helm with the twin, front-mounted steering cylinders mounted on the port and starboard engines. The hoses are routed through conduit to prevent chafing or contact and interference with equipment or the hull structure.

Section E. Propulsion Fuel System

Introduction	The propulsion fuel system provides 285 gallons (95%) of burnable gasoline for operating the three outboard engines.
E.1. Fuel Tank	The fuel tank is constructed of $^{1}/_{4}$ inch welded 5086 marine grade aluminum. Transverse baffles restrict free surface movement of the fuel. The bottom is rolled (no seams) with doublers on either end, welded to flanges that are mounted on shock absorbent rubber isolation pads. Doubler plates isolate the tank from mounting brackets. Rubber mounts isolate the tank from the hull.
E.2. Fuel Tank Vent	The fuel tank vent line is integral to the fuel tank and connects to the vent.

E.3. Fuel Tank Fill (Gasoline)

The fuel tank fill cap (**Figure 3-36**) is located between the port and starboard aft equipment lockers. The vent for the fuel tank is located directly above the fill cap.

CAUTION !

Fuels containing ethanol or methanol should be avoided whenever possible. These additives may cause corrosion of metal parts, deterioration of rubber and plastic parts, fuel permeation through rubber hose lines, and difficulty in starting and operating the engines. The fuel hoses, filters, and connections should be inspected frequently when using fuel with alcohol additives.

Figure 3-36
Fuel Tank Fill

E.4. Fuel Filters/Water Separators

The fuel hose supplying each outboard engine has a Racor fuel filter/water separator (**Figure 3-37**) mounted in the port aft deck locker. Each filter has a translucent bowl that allows for visually determining the presence of water in the fuel. Filters are rated at 60 gallons per hour (GPH) and have a 10 micron, disposable filter element.

NOTE

The fuel tank pick-up tubes are not equipped with filter screens. The Racor filter acts as a water filter and strainer. Debris may accumulate in the filter bowl. If rust, metal shavings or other debris is detected, clean the filter bowl.

Figure 3-37
Fuel Filters/Water Separators

E.5. Fuel Tank Level Sensor

The fuel tank level sensor is located in the tank top service center (**Figure 3-38**), which protrudes from the aft section of the fuel tank into the port, aft deck locker. The fuel fill and fuel suction outlets are also located here. A placard states the tank capacity, manufacturer's name, date it was built, and the pressure used for tank testing. The fuel tank level sending unit is sealed with a gasket and gasket sealant, and drilled and tapped into the top of the fuel pod. The fuel fill and pickups are welded in on both sides.

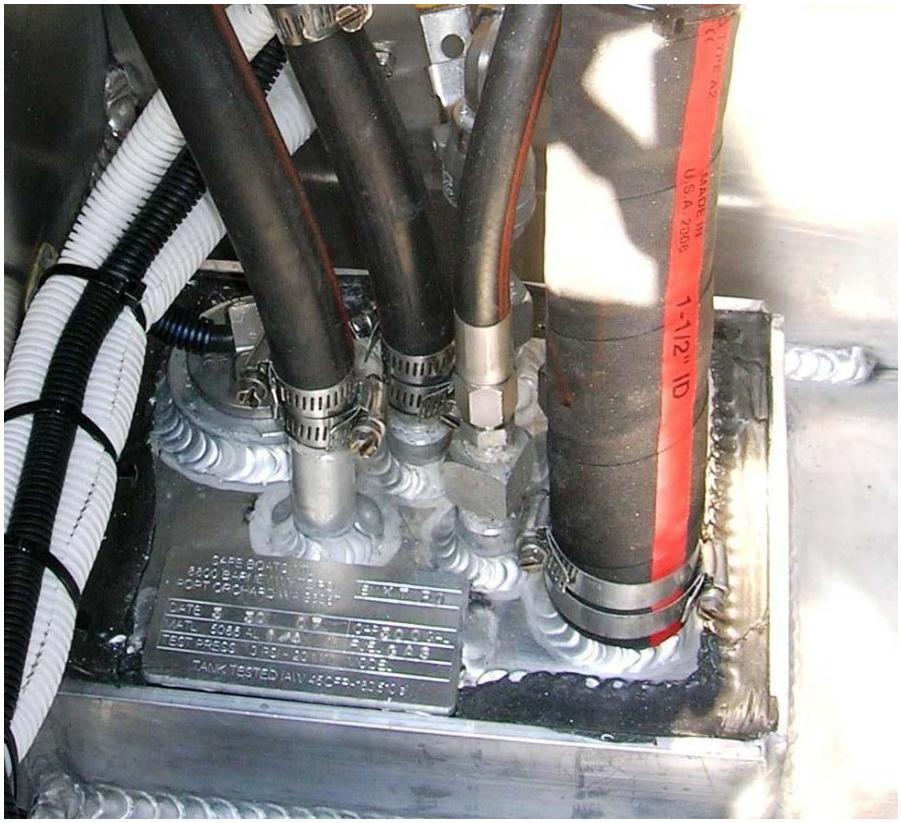

Figure 3-38
Fuel Tank Top Service Center

Section F. Communications/Navigation System

Introduction

All of the standard marine communications and navigation equipment is mounted in the cabin. The SPC-LE utilizes a Scalable Integrated Navigation System (SINS) that is built around the Furuno NavNet radar/chart plotter. Communication equipment includes the following:

Whelen WPA Loudhailer
Motorola XTL 5000 VHF-FM Radio
Motorola XTL 5000 UHF Radio
Motorola HF-SSB MCM 3T Transceiver
Furumo 88005 VHF-FM Radio

The SINS system includes the following:

RDP 149/NT Radar/Video Display
PG1000 Heading Sensor
GP-37 WAAS/DGPS Navigator
RD-30 Multi-Display Unit
ETR 6/10N Depth Sensor

NOTE

Frequent operations and position reports between the boat and its operational control (OPCON) are critical to crew safety and timely mishap follow-up. Every boat must have the capability for communicating by radio to the station and other vessels. For radio protocol, channel selection, and additional radio communication information, refer to *Chapter 11* in the *Boat Crew Seamanship Manual*, COMDTINST M16114.5 (series); the *Telecommunications Manual*, COMDTINST M2000.3 (series); and the *Radiotelephone Handbook*, COMDTINST M2300.7 (series).

F.1. Whelen WPA Loudhailer

The Whelen WPA loudhailer (**Figure 3-39**) provides 100 watts of output power to the loudhailer speaker on the forward face of the radar pod. The loudhailer has three siren tones, horn, loudhailer and radio repeat functions.

A toggle switch on the panel can be set for siren or siren and lights operation. The blue strobe lights will flash continuously with the switch in the siren-lights position.

The loudhailer and microphone are mounted on the port side of OHIP. Power for the loudhailer comes from the *Hailer* breaker on the upper 12 VDC distribution panel.

Figure 3-39
Whelen Loudhailer Control

F.2. Motorola VHF-FM and UHF Astro XTL 5000 Transceivers and Control Heads

A Motorola XTL 5000 VHF-FM radio with encryption capability is provided. The remote head is mounted on the starboard side of the OHIP and labeled *VHF-1* (**Figure 3-40**). The fold-down antenna is mounted forward on the starboard side of the cabin top. Power for the radio comes from the *VHF-1* breaker on the upper 12 VDC distribution panel.

A Motorola XTL 5000 UHF radio with encryption capability is provided. The remote head is mounted on the port side of the OHIP and labeled UHF (**Figure 3-40**). The fold-down antenna is mounted forward on the port side of the cabin top. Power for the radio comes from the *UHF* breaker on the upper 12 VDC distribution panel.

External speakers are mounted on the aft bulkhead of the cabin.

Figure 3-40
Motorola VHF-FM and UHF Marine Radios

F.3. Motorola HF-SSB MCM3T Transceiver and Control Head

A Motorola HF-SSB MCM 3T transceiver is installed. The control head is mounted on the dash panel, on centerline, in front of the Furuno integrated display (**Figure 3-41**).

The radio has four power levels up to 125 watts. There are five scanning groups of up to 200 channels, each with a guard channel. Power for the radio is supplied through the *SSB* breaker on the upper 12 VDC distribution panel.

The antenna is mounted at the transom, starboard side.

Figure 3-41
Motorola HF-SSB Marine Radio Control Head

F.4. Furuno 8800S VHF-FM Transceiver

A Furuno 8800S VHF-FM radio, with Digital Selective Calling (DSC) and power output selection between 25 watts high power and 1 watt low power, is located in the cuddy cabin, starboard side (**Figure 3-42**), and labeled *VHF-2*. A whip antenna for the unit is mounted on the port side of the cabin roof. This radio receives continuous GPS data through the NMEA interface for transmission in an emergency. The fold-down antenna is mounted aft of the port side spotter window. Power to the radio is 24 VDC, supplied directly from a 24-12 VDC converter.

A remote operating panel for this radio is located in front of the forward crew seat on the port side (**Figure 3-43**).

Figure 3-42
Furuno 8800S VHF-FM Transceiver

Figure 3-43
Furuno 8800S VHF-FM Transceiver Remote Control Head

F.5. Furuno RDP149/NT Integrated Display

The Furuno RDP149/NT integrated display (**Figure 3-44**) is mounted on top of the dash panel on the centerline. This surface radar/chart plotter/fish finder display has a 10.4 inch color LCD display and utilizes an X-band transmitter for reliable operation in all types of weather. The true color radar displays six levels of target density and is capable of tracking storms. The radar incorporates head-up, course-up, north-up, and true motion display modes. The range scales are from 0.125 to 24 NM. The Echo Trail intervals available are 15 seconds; 30 seconds; 1, 3, 6, 15 and 30 minutes; or continuous.

The plotter has a memory capacity of up to 8000 points for the boat's track and marks, 1000 waypoints, and 200 planned routes. Display modes include course plot, navigation data, steering display, and highway. Plot interval is adjustable from 1 second to 59 minutes, 59 seconds, or 0.01 to 9.99 NM. Alarms available are guard zone, arrival/anchor watch, proximity alert, ships speed, water depth and temperature, and cross track error (XTE). A SAVE MOB function will immediately mark the MOB position and display the range and bearing of the man overboard location on the display. Power for the display comes from the *Radar* breaker on the upper 12 VDC distribution panel.

Figure 3-44
Furuno Integrated Display

F.6. Radar Antenna

The radar antenna (**Figure 3-45**) is a Furuno 41 inch, open array antenna that has a maximum range of 24 NM. Power for the antenna comes from the *Radar* breaker on the upper 12 VDC distribution panel.

Figure 3-45
Radar Antenna

F.7. GP-37 WAAS/DGPS Receiver and Navigator

The GP-37 WAAS/DGPS receiver and navigator (**Figure 3-46**) is mounted on the port face of the helm console. The GP-37 is a totally integrated DGPS receiver and video plotter. The GP-37 can track up to 13 satellites (12 DGPS, 1 WAAS) simultaneously using the WAAS/DGPS receiver/antenna mounted on the cabin roof near the thermal imaging camera foundation.

Display modes available are: plotter, NavData (position indication in latitude, longitude or LORAN), steering (vessel course, position, speed), and highway. The GP-37 has five available alarm functions and a memory capacity of 1000 points of vessel track, 999 waypoints or marks, and 50 routes comprised of up to 30 waypoints. The GP-37 has an accuracy of 5 meters or better with DGPS and 3 meters or better with WAAS. The GP-37 receives power from the GPS breaker on the upper 12 VDC distribution panel.

NOTE

WAAS is not currently approved for use by Coast Guard vessels. In the AUTO mode, the GP-37 runs with DGPS as the default setting. If the DGPS signal is lost for any reason, the WAAS mode is automatically selected. Consult the Furuno Operator's Manual for the GP-37 DGPS Navigator to enable the AUTO mode from the Menu selection.

F.8. RD-30 Multi-Display

The RD-30 multi-display and data repeater (**Figure 3-46**)) is mounted on the starboard face of the helm console. The RD-30 utilizes a wide variety of navigation data and displays it in digital and analog (graphic) formats. The multi-display uses input from the depth/temperature sensor, radar, WAAS/DGPS receiver/antenna, and the PG-1000 heading sensor to provide essential navigational information. The unit features a $4^{1}/_{2}$ inch backlit LCD screen and has five user programmable displays. The RD-30 has 10 conditions that can trigger audio and visual alarms:

Speed
Water temperature
Depth
Arrival/anchor watch
XTE
Trip distance (two alarms)
Countdown timer
Alarm clock
No position fixing
No position data

The RD-30 receives power from the *Depth Sounder* breaker on the upper 12 VDC distribution panel.

NOTE

The PG-1000 Fluxgate heading sensor (displayed on the RD-30 Multi-Display) has proven to be accurate and shall be considered the primary navigation compass. In addition, the Course Over Ground feature on the GP-37 WAAS/DGPS Receiver and Navigator is unaffected by Electro Magnetic Interference and therefore can also be used in combination with the digital compass.

NOTE

The accuracy of the digital compass should be frequently checked by steering a known range and calibrated in accordance with the manufacturer's instructions. If the boat experiences electronic problems, operates in a new geographic region, or requires recalibration for some other reason, record the results of the accuracy check in Part 1 of the Boat Record.

F.9. Magnetic Compass

A Ritchie magnetic compass (**Figure 3-46**) is mounted on the starboard dash panel, centered over the helm console. The magnetic compass shall only be used as an emergency backup compass if the PG-1000 Fluxgate compass and/or GP-37 WAAS/DGPS Receiver and Navigator fail. It is of the utmost importance that Coxswains remain aware of the affects of Electro Magnetic Interference (EMI) caused by various energized electronic accessories and engine RPMs when using the magnetic compass. In the event of an electronic navigation system failure, Coxswains and operational commanders must consider all available options, including anchoring to await an escort, during the risk assessment process.

The compass contains an internal gimbal system for maximum stability during adverse weather conditions. Built-in compensators provide for easy compass deviation adjustments. The dial is calibrated in white 5° increment markings. Lubber lines are provided at 45°.

The magnetic compass must be calibrated on an annual basis. Compass calibration should be performed with all non-essential accessories (heater, wipers, fans, floodlights, etc.) secured and at low engine RPM. With the non-essential accessories secured, units should be able to calibrate the magnetic compass within 5°. However, deviation greater than 5° is not considered a restrictive discrepancy when accessories are energized or while traveling at higher RPM. A waiver to operate the SPC-LE with excessive deviation when accessories are energized is not required. Multiple deviation tables that record deviation levels with various electronic accessories energized, or under various engine RPM loads, are also not required. The only requirement is to have a current deviation table on board. Units should document the fact that the compass was adjusted with non-essential accessories secured (windshield wipers, fans, heater, and flood lights, etc).

CAUTION !

Magnetic compass deviation may occur when cabin electrical equipment (windshield wiper motors, cabin fan motors, heater, or flood lights) is energized, creating Electro Magnetic Interference (EMI). EMI may also affect the magnetic compass at various engine RPMs.

Figure 3-46
Helm Console

F.10. PG-1000 Heading Sensor

The PG-1000 heading sensor (**Figure 3-47**) is mounted on a bracket in a protective housing below and to starboard of the cuddy cabin door.

The sensor detects terrestrial magnetism and produces heading data, which can be utilized by navigation system components that need accurate and stable heading input. The heading accuracy of the sensor is ±1°. The compass sensor receives power from the *Radar* breaker on the upper 12 VDC distribution panel.

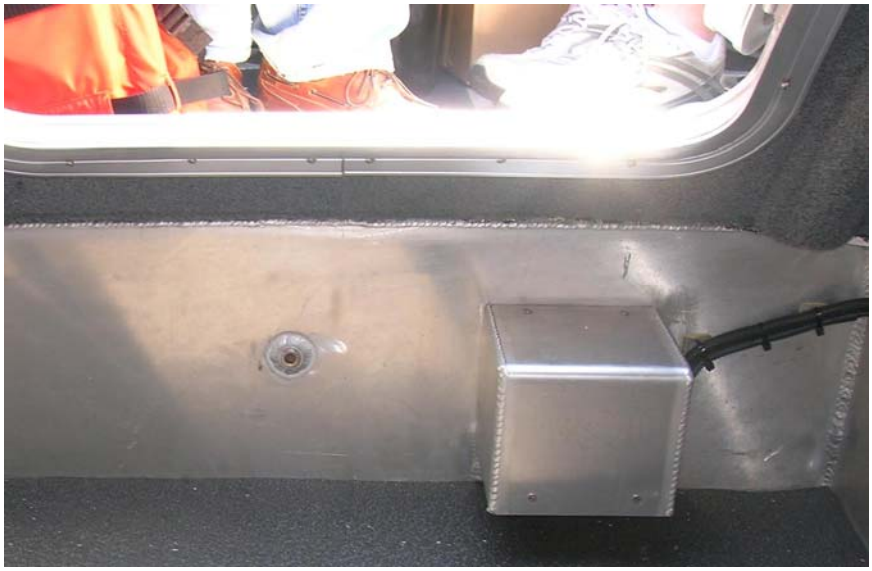

Figure 3-47
Heading Sensor

F.11. Furuno ETR6/10N Depth Sounder

The Furuno ETR6/10N network sounder is a dual frequency fish finder. The sounder has a selectable 600 W or 1 kW output power. A selectable LF (50 kHz), HF (200 kHz) transducer (**Figure 3-48**) output provides detailed echoes of bottom structures and fish using range scales of up to 5,000 FT. Images are displayed on the Furuno RDP149/NT integrated display and RD-30. The transducer is located in the engine well void. The sounder receives power from the *Depth Sounder* breaker on the upper 12 VDC distribution panel.

F.12. Ethernet Hub

The radar, GPS, RD-30 display, PG-1000 heading sensor, and depth sounder are linked by an Ethernet hub. The hub receives power from the R*adar* circuit breaker located on the upper 12 VDC distribution panel.

Figure 3-48
Depth Sensor

F.13 ProTec Automatic Identification System

An L-3 ProTec Automatic Identification System (AIS) transponder is located above the helm console, inboard of the magnetic compass (**Figure 3-49**). Once programmed and turned on, the unit will respond to a query from an authorized shore or ship station, providing the SPC-LE identification number, boat dimensions, course, speed, position, destination, and number of persons on board.

Figure 3-49
Automatic Identification System Transponder

F.14. Antennas

The communications and navigation antennas (**Figure 3-50**) are mounted on the radar pod, cabin top and transom. All antennas and the radar pod can be lowered to reduce overhead clearance.

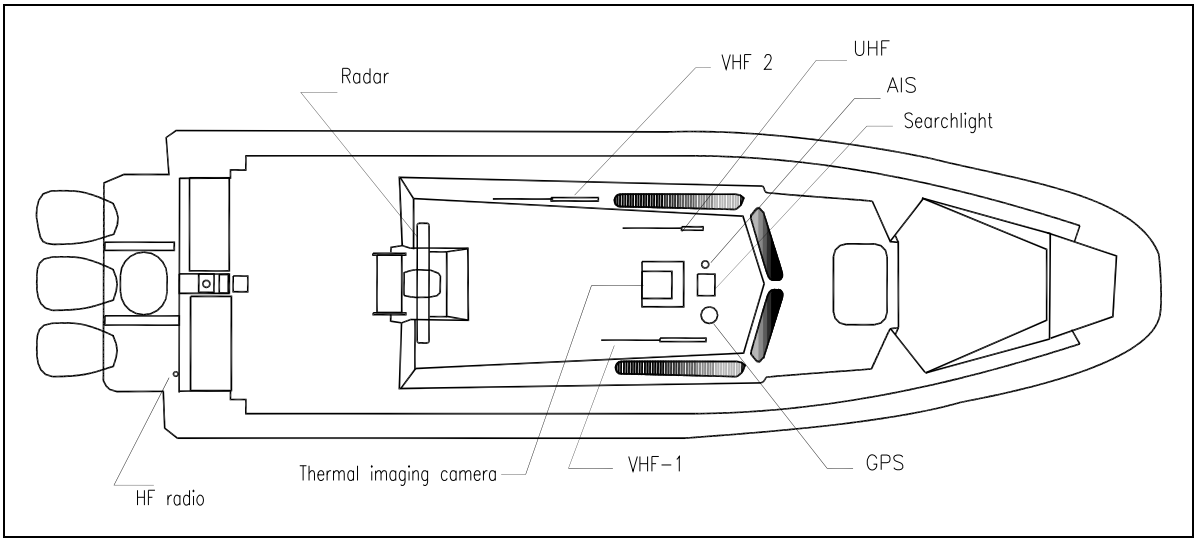

Figure 3-50
Antennas

F.14.a. Radar pod

The radar pod is the mounting for the radar antenna, strobe lights, floodlights, towing line reel, horn, towing light mast, and loudhailer speaker. The pod is hinged on the aft side and can be rotated aft and down to reduce overhead clearance (air draft).

A 12 VDC connector on the pod provides power for the portable towing light mast.

The pod is held in place by two ball-head pins, port and starboard, and two clamps on the forward face of the pod (**Figure 3-51**). The pod is heavy. Lowering the pod is best done using three personnel; one on the cabin top and two to support the pod as it is lowered aft.

CAUTION !

The radar pod must be lowered gently. The hinges will crack if the pod is allowed to drop back.

Figure 3-51
Radar Pod in Raised and Lowered Positions

F.15. Thermal Imaging System (optional)

The cabin top has a platform directly aft of the spotlight for mounting a thermal imaging camera (**Figure 3-52**). This platform is the highest fixed structure on the boat when the antennas and the radar pod are lowered.

F.15.a. Thermal Imaging Camera

The thermal imaging camera is a sphere that is $10^1/_2$ inches high when mounted on the thermal imaging platform (**Figure 3-53**). The camera has daylight and night vision capability and a laser pointer. The camera is stabilized and has zoom capability. Images are displayed on RDP 149 NT integrated display. The camera operation is controlled from a hand-held unit on a 10 FT coil cord (**Figure 3-54**). The thermal imaging camera is powered from the 40 amp breaker on the 12 VDC distribution panel (**Figure 3-57**). See *FLIR System SEAFLIR II Operator Training* for specific operating instructions.

Figure 3-52
Thermal Imaging Camera Mounting Platform

Figure 3-53
Thermal Imaging Camera

Figure 3-54
Thermal Imaging Camera Handheld Controller

Section G. Electrical System

Introduction

The direct current electrical system consists primarily of three engine-driven alternators, three engine starting batteries, one house battery, one 120 VAC generator starting battery, and control devices and indicators. The alternating current electrical system is supplied by a gasoline-powered generator or from a shore power connection.

G.1. Alternators

Three engine alternators provide the charging power for the boat's batteries. Each alternator is rated at 12 VDC, 70 amps at 3000 RPM. The regulated output can produce 53-69 amps of current at the battery at 3000 engine RPM, and 37-44 amps of current at the battery at 1000 engine RPM. Each alternator is belt-driven and mounted on the port side of the engine (**Figure 3-5**). An alarm and a warning message will appear on the engine gauge if the charging system is faulty.

CAUTION !

If the 12 VDC power supplies trip off-line, secure the electronics and allow power supplies to cool. Visually check the individual or the main 100 amp breaker to see if it has tripped. Isolate the circuit (breaker off/open) until the system can be serviced.

G.2. Batteries

The batteries installed on the SPC-LE consist of one generator starting battery and four 12 VDC gel-cell type batteries mounted in two "Troll Fury" battery boxes in the port and starboard lockers under the forward crew seats (**Figure 3-55**). The batteries are vented to the exterior to prevent accumulation of charging gasses (**Figure 3-56**). The port engine and house batteries are located under the port seat, the center and starboard engine and the generator starting batteries are under the starboard seat.

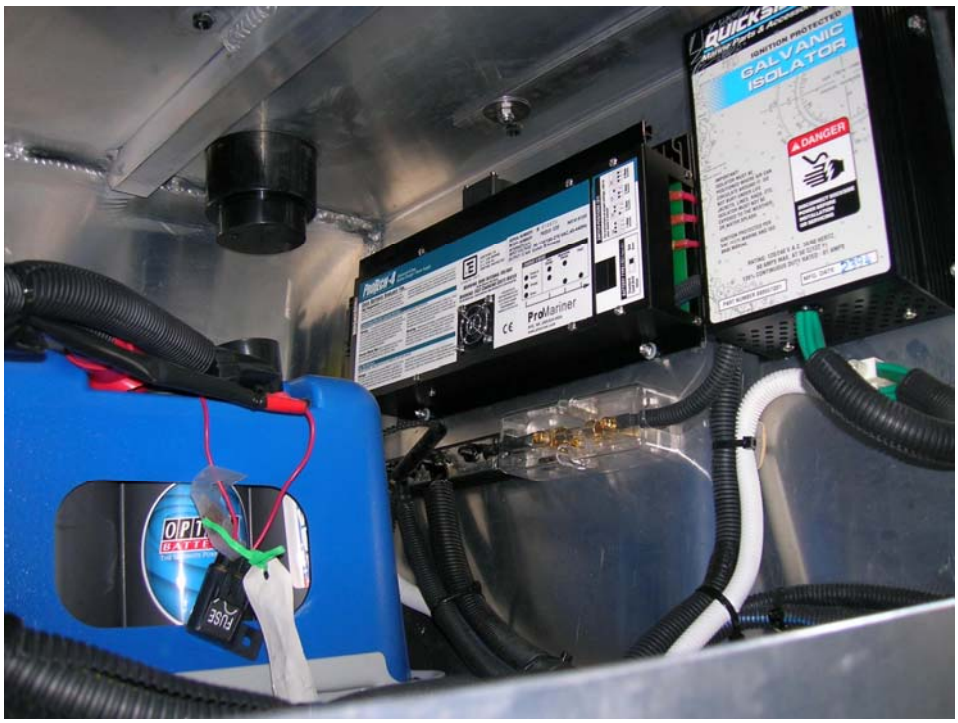

Figure 3-55
Port Battery Locker

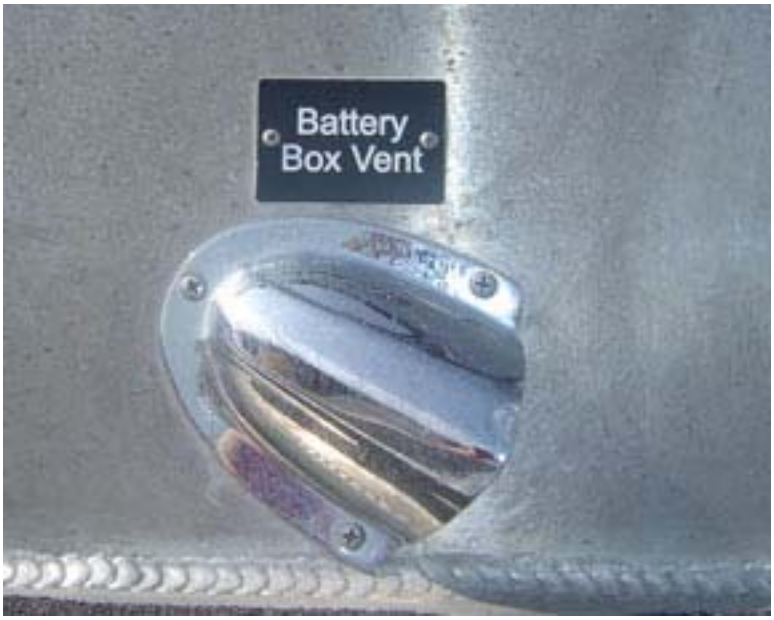

Figure 3-56
Battery Box Vent

G.3. Battery Switches

The battery switches are mounted on the 12 VDC main power panel (**Figure 3-57** and **Figure 3-58**) located inside the cuddy cabin, port side. The panel has switches labeled as follows:

Port Battery
Starboard Battery
Center Battery
House Battery

Under normal circumstances, the port, center and starboard batteries are operated independently for engine starting. However, if the individual battery fails to start the engine, a combining position on each of the starting battery switches will parallel the batteries. The house battery switch has no combining position.

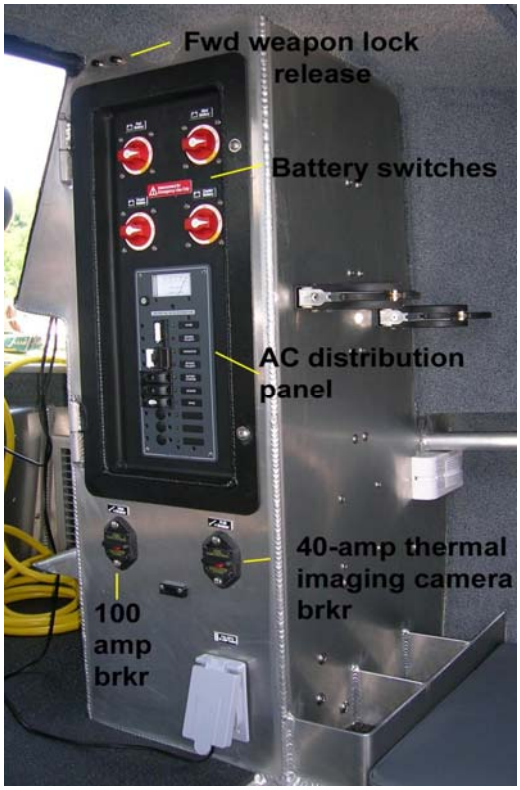

Figure 3-57
12 VDC/120 VAC Main Power Panel

Figure 3-58
Battery Switches

G.3.a. Battery Isolators

The electronics (house) battery is charged by any of the three engine alternators and the battery charger. It is protected by battery isolators so that it cannot leach power from the engine starting batteries. Engine starting batteries are similarly isolated from each other.

G.3.b. Circuit Overload Protection

The 12 VDC main power panel (**Figure 3-59**) also incorporates a 100 amp breaker for circuit overload protection.

G.4. 12 VDC Distribution Panels

Three 12 VDC distribution panels (**Figure 3-59**) are located on the inboard side of the starboard cabin console. The panels provide circuit protection for shipboard electrical and electronic equipment. Listed below are the components served by each console:

Distribution Panels		
Upper Panel	**Middle Panel**	**Lower Panel**
Radar	Navigation Lights	Gun Locks
GPS	Instruments Lights	Fan
Depth Sounder	Floodlights	Windshield Wipers
VHF 1	Strobe Light	Horn
Spare	Searchlights	12 VDC Outlets
UHF	Deck Lights	Blower
SSB	Cabin Lights	Spare
Hailer	Spare	Spare

Figure 3-59
12 VDC Distribution Panels

G.5. In-Line Fuses

In addition to the main 100 amp breaker and individual circuit breakers, some equipment is protected by in-line fuses. The electronic control system for each engine is protected by a 5 amp in-line fuse located at the engine battery (**Figure 3-55**). Additional in-line fuses are located in the helm console. Access to these fuses is by removal of a vinyl cover in the cuddy cabin (**Figure 3-60**).

Figure 3-60
Console Wiring Access

G.6. Ground

A two-wire insulated return (ungrounded) 12 VDC system is used so that all grounds from electronic equipment are run back to the battery and are not grounded to the hull.

G.7. 120/240 VAC Generator

A Kohler 120/240 VAC, 5 kW generator is located in the aft, starboard corner of the cabin and powers the air conditioning unit, battery charger and 120 VAC outlets. A blower is located within the compartment to remove any gasoline vapors before starting the generator. The switch for the blower is located on the helm console, inboard of the steering wheel. The blower must be run for five minutes before starting the generator. The exhaust vent for the blower is located in the aft cabin bulkhead, outboard of the generator access panel (**Figure 3-61**).

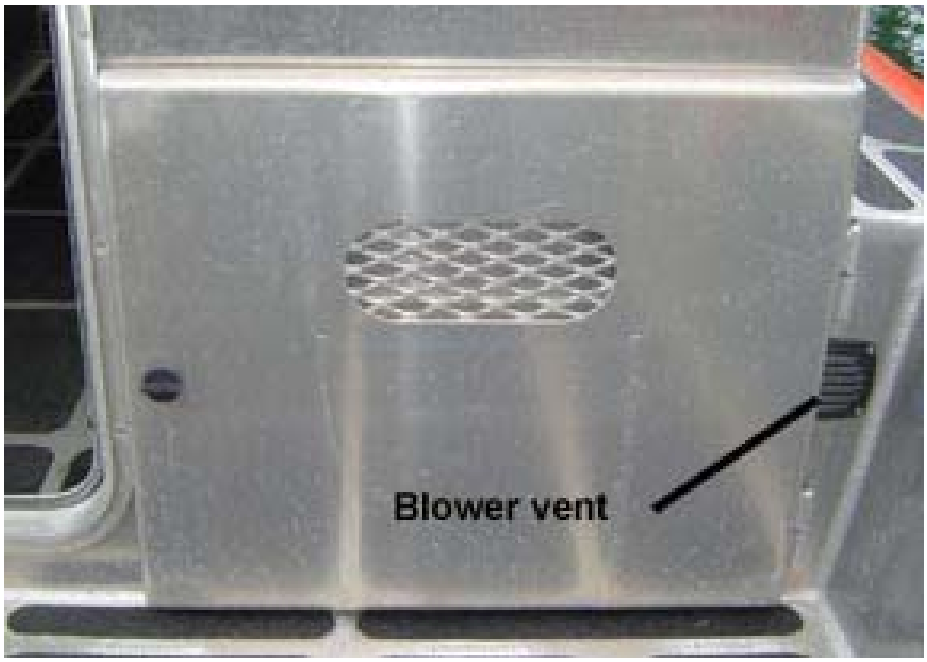

Figure 3-61
Generator Access Panel and Blower Exhaust Vent

G.8. Generator Control Panel

The control panel for the generator is located on the helm console, inboard of the steering wheel (**Figure 3-62**). The panel contains a Preheat/Start/Stop switch and the following gauges:

Oil Pressure
Water Temperature
Engine Hours
Battery Voltage

The procedure for starting the generator is:

Run the blower for at least five minutes before starting the generator.

Turn on the generator battery isolation switch.

Press the rocker switch in the start position.

There is no preheating requirement for this gasoline-powered generator.

Figure 3-62
Generator Control Panel

G.9. Generator Battery

The starting battery for the generator is located in the starboard battery locker. A battery isolation switch (**Figure 3-63**) is located on the forward seat foundation on the starboard side. This switch does not allow combining with any other battery.

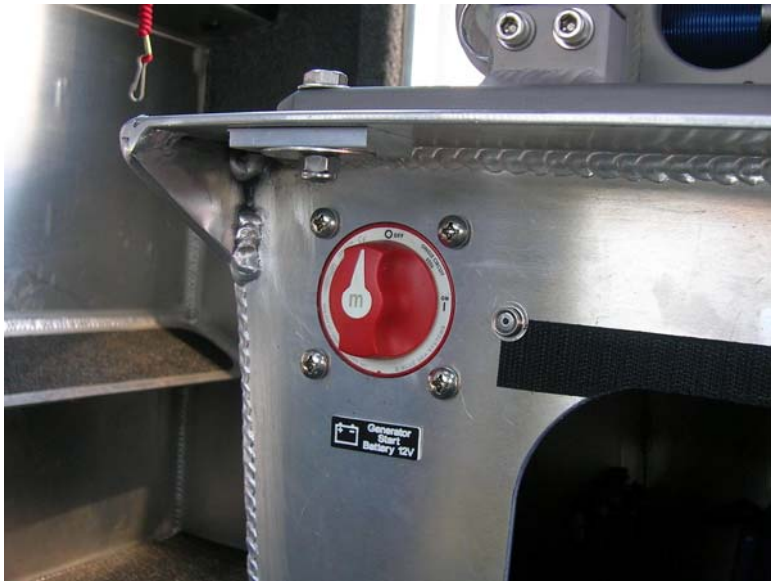

Figure 3-63
Generator Battery Isolation Switch

G.10. Generator Cooling Water

Cooling water for the generator engine is picked up by a clamshell inlet on the starboard side of the hull near the transom. A seacock on the clamshell connects to a strainer located in the starboard aft deck locker (**Figure 3-64**). The seacock must be open and the strainer free from debris to prevent overheating of the generator engine.

Figure 3-64
Generator Cooling Water Piping

G.11. Generator Filter and Fuel Shutoff

A fuel shutoff valve (**Figure 3-65**) for the generator is located in the port aft deck locker. The shutoff is located beside the generator fuel filter. It has a yellow handle that is somewhat hidden among the fuel hoses at the tank top. The hand in the photo is pointing to a locking slide on the handle that secures it in the open position. The slide must be moved vertically to unlock the handle and close the valve.

G.12. Generator Fire Port

A fire port (**Figure 3-66**) is located in the bulkhead on the inboard side of the generator compartment. A fire extinguisher may be discharged into this port in the event of a fire in the generator compartment. Type B-1 portable fire extinguishers are located in the cuddy cabin, main cabin, and in the aft starboard locker.

CAUTION !

The fire port may or may not have a cover as shown in **Figure 3-66**, but it does have a plastic seal that must be broken before discharging the fire extinguisher into the port.

Figure 3-65
Generator Fuel Shutoff

Figure 3-66
Fire Port

G.13. Shore Power Connection

The shore power connection is rated for 30 amps. The power connection is located on the port side of the cabin, forward of the side door (**Figure** 3-67). The 120 VAC distribution panel is located below the battery isolation switches, inside the cuddy cabin, port side.

The top set of switches (**Figure 3-68**) allows either the generator or the shore power input to be live, but not both. This prevents any potential damage to the distribution system.

WARNING

The main AC breaker must be turned off before connecting or disconnecting the shore power cable. Connecting or disconnecting the cable with power flowing will cause an arc at the connection. Damage from the arc is progressive and will cause overheating of the plug and socket, which may eventually cause a fire.

Figure 3-67
Shore Power Connection

Figure 3-68
AC Power Distribution Panel

Section H. Seating System

Introduction

Four shock mitigating, suspension-mounted seats are located in the cabin. A padded bench seat is also located in the cabin. Additional padded bench seats are located in the cuddy cabin. All interior cabin seats are equipped with seat belts.

H.1. Forward Cabin Seats

The shock mitigating cabin seats (**Figure 3-69**) have an overall width of 24 inches and a height adjustment of 3 inches. There is a 6 inch forward and aft double locking slide adjustment via a handle on the lower left portion of the seat. The backrest is adjustable and the armrests fold up for easy access. The seat back is contoured for lumbar support. The base is made of mild steel with steel fasteners. The base is equipped with a heavy-duty adjustable shock absorber and is designed for severe duty.

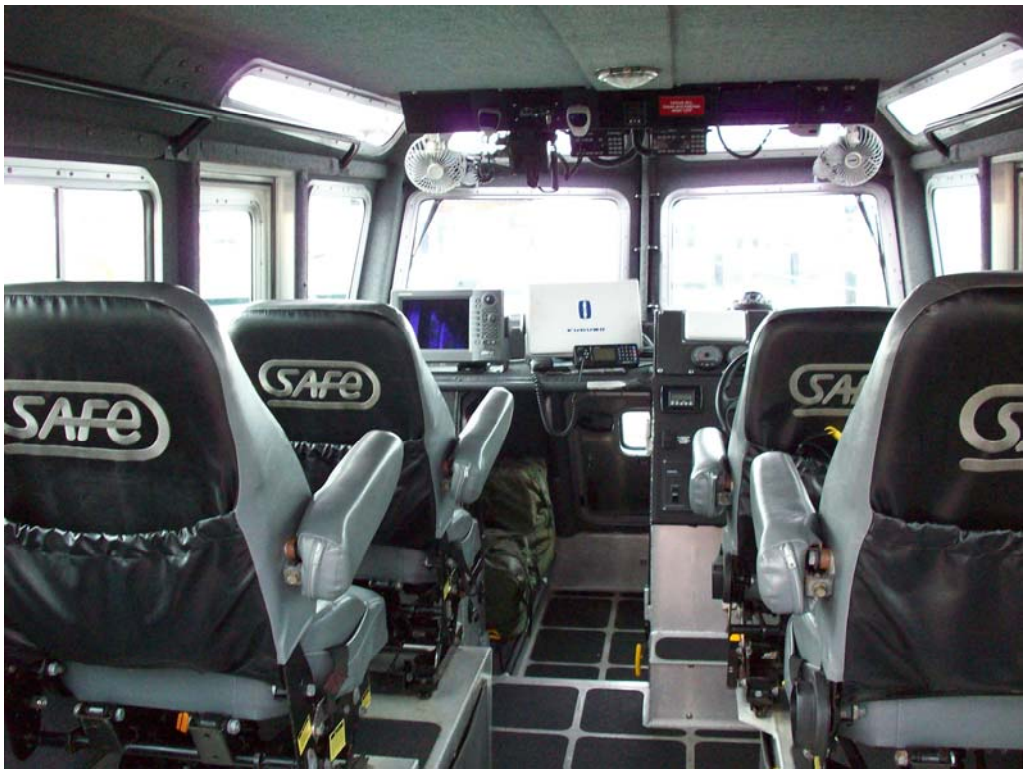

Figure 3-69
Cabin Seats

NOTE

Regular maintenance of the seats must be performed in accordance with PMS to ensure proper operation.

This page intentionally left blank.

Section I. Heating and Air Conditioning System

Introduction

The SPC-LE is equipped with a marine grade heating and air-conditioning unit capable of at least 24,000 Btu cooling. Full heating capacity is available in water temperatures as low as 55° F (13° C), but drops to about 50% capacity in 40° F (4.4° C) water. Below this, the refrigerant pressure can be so low that the unit will not produce heat. In cooling mode, the air conditioner works best when the seawater temperature is below 90° F (32° C). At higher water temperatures, the unit will operate, but at reduced capacity. As the water temperature rises, so does the refrigerant gas pressure. A high-pressure safety switch will shut the unit down if the water temperature gets too hot or there is a loss of cooling water flow.

I.1. Mechanical Unit

The compressor and heater unit (**Figure 3-70**) is located in the aft port corner of the cabin and is accessed through a hinged panel on the aft cabin bulkhead. The unit is ducted to a vent in front of the port, forward seat and up to the windows to serve as a defroster.

Figure 3-70
Heater/AC Unit

I.2. 20 Amp Breaker

The heater/air conditioner receives power from the generator. A 20 amp breaker connects the heater to the 240 VAC electrical system. The breaker is located just inside the cabin door to the aft weather deck, port side (**Figure 3-71**).

Figure 3-71
Heat and A/C 20 amp Breaker

I.3. Control Panel

The thermostat and control panel for the unit switch (**Figure 3-72**) for the heater/air conditioner is located on the starboard dash panel, inboard and beside the steering wheel.

Figure 3-72
Heat and A/C Control Panel

I.4. Window Defrosters

Window defrosters (**Figure 3-73**) are slots located atop the dash panel, below the windows.

Figure 3-73
Window Defroster

This page intentionally left blank.

Section J. Weapons Mounting/Stowage

Introduction

The fore and aft tow bitts on SPC-LEs are designed to provide the foundation for and accommodate the M-240B machine gun (**Figure 3-74** and **Figure 3-75**).

NOTE

Weapons allowances for Coast Guard boats are established by CG-532.

J.1. Pedestal Stands

The MK 16 MOD 8 stands may be mounted on the forward and aft tow bitts. The stands can receive various weapons and are equipped with stops to prevent discharging the weapon toward the hull.

CAUTION !

The MK-16 MOD 8 stand is the only stand authorized for use aboard SPC-LEs. The MK-16 MOD 8 stand shall be used with the MK-97 mount (for the M-240B machine gun). Under no circumstances shall the UTB M-60 mount be used aboard SPC-LEs, as these mounts are a one-of-a-kind design, specifically made to work only on UTBs. Units should contact their servicing armory if in doubt as to the appropriate weapon or weapon mount configuration.

J.2. Machine Gun Elevation and Train Stop Limits

The bow mount setting for train should be set to 060° to starboard and 300° to port. This setting allows for 120° of train on the bow mount. The bow mount setting for depression should stay at the stock depression setting, with the depression stop bolt in its lowest position. In this manner, the weapon will not engage any of the boat's structure and will allow for approximately 050° elevation and -015° depression.

The stern mount setting for train should be set to 045° to starboard and 315° to port. This setting allows for 270° of train on the stern mount. The stern mount settings for depression should be set at approximately -005°. When employed, the taffrail must be lowered to its intermediate position to provide an unobstructed field of fire.

Figure 3-74
Forward Gun Mount

Figure 3-75
Aft Gun Mount

J.3. Ammunition Stowage

Ready service ammunition for the forward gunner is stowed in the anchor locker depicted in **Figure 3-76**. Ready service ammunition for the aft gunner is stowed in the cabin.

Figure 3-76
Ammunition Stowage

J.4. Weapon Locks/Mounts

The SPC-LE utilizes Santa Cruz electrically operated weapon locks (**Figure 3-77**) with backup key override. Power for the locks comes from the *Gun Locks* breaker on the lower 12 VDC power distribution panel. The release buttons for the forward weapon locks are located over the battery switches in the cuddy cabin, port side (**Figure 3-57**). The release buttons for the aft weapon locks are located inside the top edge of the opening under the aft crew seat, port side (**Figure 3-78**). The buttons must be depressed until the weapon is removed from the lock.

Figure 3-77
Weapon Lock/Mount

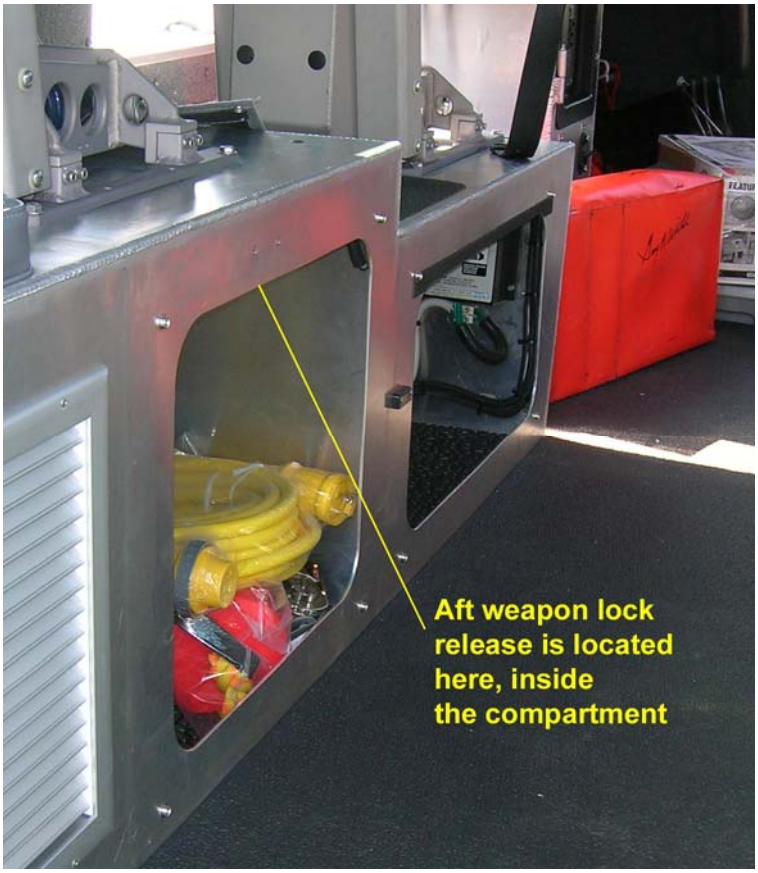

Figure 3-78
Aft Weapon Lock Release Button

Section K. Hull Exterior Lighting

Introduction

The SPC-LE is equipped with exterior lighting to comply with international marine operating requirements for specific mission operations and crew safety.

K.1. Searchlight

The searchlight (**Figure 3-79**) is mounted on the centerline atop the cabin and is controlled by two remote control panels (**Figure 3-80**), one mounted on the OHIP and the other on the outboard side of the helm console. The searchlight is rated at 200,000 candlepower and can be rotated 360°. The beam can be elevated 9° up and -17° down. Power for the searchlight comes from the *Searchlight* breaker on the middle 12 VDC distribution panel.

Figure 3-79
Searchlight

Figure 3-80
Searchlight Control

K.2. Light Switch Panel

The light switch panel (**Figure 3-81**) is located on the starboard side of the OHIP and includes a switch for the horn. Power for the horn comes from the *Horn* breaker on the lower 12 VDC distribution panel. Power for the various lights comes from the appropriately labeled breakers on the middle 12 VDC distribution panel. The following lights are controlled from the light switch panel:

Port (red) navigation light (**Figure 3-82**)	Port forward on upper cabin bulkhead
Starboard (green) navigation light (**Figure 3-83**)	Starboard forward on upper cabin bulkhead
Anchor/masthead/stern light (white) (**Figure 3-84**)	Atop the radar pod
Port and starboard floodlights (**Figure 3-84**)	Port and starboard on the side of radar pod
Aft floodlights (**Figure 3-84**)	Aft port and starboard on the aft frame of radar pod
Exterior (deck edge) lights (**Figure 3-85**)	Exterior cabin bulkhead, port and starboard, outboard along the deck edge
Law enforcement lights (2) (blue). Note that these lights are also controlled by the siren/lights switch position on the Whelen loudhailer (**Figure 3-84**)	Atop the radar pod, port and starboard
Interior deck lights (**Figure 3-87**)	Near deck in cabin and cuddy cabin
Towing lights (**Figure 3-87**)	On portable mast
Instrument lights	On console

Figure 3-81
Light Switch Panel

Figure 3-82
Port Navigation Light

Figure 3-83
Starboard Navigation Light

Figure 3-84
Anchor/Masthead Light, Floodlights, Strobe Lights

Figure 3-85
Exterior (Deck Edge) Light

Figure 3-86
Interior (Deck Edge) Light

K.3. Towlight Mast

A removable tow light (**Figure 3-87**) mast is stowed inside the cabin on the aft bulkhead, above the cabin door. When required, it can be quickly erected on the starboard aft side of the radar pod (**Figure 3-88**) and extended and locked into place using a ball-lock pin. Two electrical connectors labeled Tow #1 (astern towing) and Tow #2 (alongside towing) mate with a 12 VDC utility receptacle located on the horizontal aft port surface of the radar pod (**Figure 3-89**).

Figure 3-87
Tow Light Mast Stowed

Figure 3-88
Tow Light Mast

Figure 3-89
Tow Light Mast Cord Connection

This page intentionally left blank.

Section L. Ancillary Systems and Furnishings

Introduction

This section discusses ancillary systems and furnishings that are installed on, or furnished with, SPC-LEs.

L.1. Windshield Wipers and Washer

SPC-LEs utilize two 12 VDC dynamic park windshield wiper motors (**Figure 3-90**) mounted in the cabin, port and starboard, adjacent to and outboard of the windshields. Two microprocessor-controlled wiper switches mounted on the helm console, or the OHIP, starboard side, control the wiper motor and washer operation (**Figure 3-91**). The switch has six positions:

Off/Park
Long Delay
Intermittent Delay
Short Delay
Low Speed
High Speed

Depressing the switch will actuate the wipers for three cycles and inject the windshield wash solution. A 4 liter windshield wash reservoir is mounted in the cuddy cabin by the helm console access. Power for the wipers comes from the *Wipers* breaker on the lower 12 VDC distribution panel.

L.2. Cabin Fans

SPC-LEs have cabin fans (**Figure 3-91**) mounted on the OHIP, outboard port and starboard. The fans can be adjusted for stationary or 120° oscillation. The fans receive power from the *Fan* breaker on the lower 12 VDC distribution panel and utilize an ON-OFF switch mounted on the base of the fan.

Figure 3-90
Windshield Wiper Motor

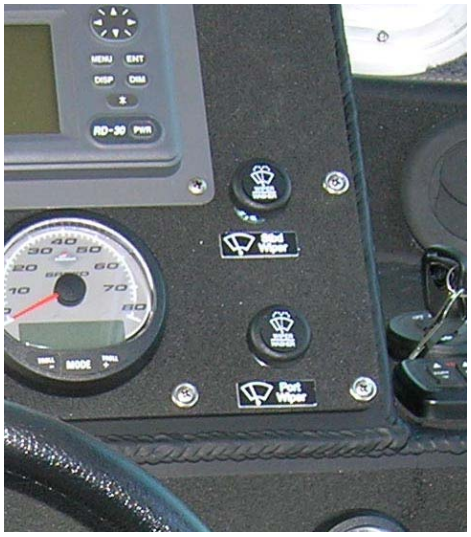

Figure 3-91
Windshield Wiper Switches and Fan (A Class) **Windshield Wiper Switches (B Class)**

L.3. Fire Extinguisher(s)

SPC-LEs have three B-1 type fire extinguishers (**Figure 3-92**) installed. One is mounted in the cabin, starboard side, one is in the cuddy cabin, starboard side, and one is mounted in the starboard aft deck locker. Each extinguisher contains approximately 2 lbs of dry chemical agent (ammonium phosphate) that will discharge in 9-10 seconds once the handle is activated. This type of extinguisher is designed to be used on Class A, B, and C fires.

Figure 3-92
B-1 Type Fire Extinguisher

L.4. First Aid Kit

One first aid kit is provided with each SPC-LE and is stowed inside the cabin. The first aid kit contains four modules equipped to treat injuries normally encountered during craft underway evolutions. Each module contains specific supplies to treat common first aid problems, cuts and splinters, sprains and fractures, CPR, and burns. The kit also contains a place to store personal over-the-counter medications and prescription drugs.

L.5. Gasoline Fume Detector

A gasoline fume sensor is located in the generator compartment. The detector display (**Figure 3-93**) and alarm are located on the helm console, above the generator control panel. Power for the gasoline fume sensor comes from the master 100 amp 12 VDC breaker located below the AC distribution panel (**Figure 3-57**).

Figure 3-93
Gasoline Fume Detector

L.6. Carbon Monoxide Detector

A carbon monoxide detector (**Figure 3-94**) is located in the cuddy cabin, port side, below and outboard of the weapons locks. Power for the monitor comes from the master 100 amp 12 VDC breaker located below the AC distribution panel (**Figure 3-57**).

Figure 3-94
Carbon Monoxide Detector

L.7. Smoke Detector

A battery-powered smoke detector is located in the cuddy cabin, starboard side, over the access to the console (**Figure 3-95**). The battery in this detector must be changed at the annual spring and fall change of Daylight Savings time, as is done for home smoke detectors, to assure continued operation of the detector.

Figure 3-95
Smoke Detector

L.8. Cabin Dome Lights

Two cabin dome lights (**Figure 3-96**) are installed on the overhead at the centerline, fore and aft, inside the cabin. The dome lights operate on 12 VDC and have a base-mounted switch for red or white illumination.

Figure 3-96
Cabin Dome Light

L.9. Horn

A 12 VDC diaphragm type horn (**Figure 3-97**) is mounted on the forward port face of the radar pod. The horn is actuated by a switch on the OHIP in the cabin and produces a 106 decibel blast. Power for the horn comes from the *Horn* breaker in the lower 12 VDC distribution panel.

Figure 3-97
Horn

L.10. Miscellaneous Stowage

Areas to stow approved deck gear and mission essential equipment are located under the aft cabin seats. The boat hook is stowed inside on the aft cabin door. There is a cargo net in the cuddy cabin for stowage of loose gear.

L.11. Emergency Position Indicating Radio Beacon

SPC-LEs are outfitted with a Category II, 406 MHz EPIRB (**Figure 3-98**). These EPIRBs are manually deployable, self-buoyant units equipped with a self-test feature that confirms operation as well as battery condition and GPS position data. The EPIRBs use GEOSAR satellites that are in geostationary high-earth orbit and can instantly relay emergency transmissions. The EPIRB provides location accuracy to 0.05 NM and can provide data to search and rescue (SAR) units within 5 minutes after activation and signal detection. A monthly inspection shall be conducted in accordance with the *Rescue and Survival Systems Manual*, COMDTINST M10470.10 (series).

Figure 3-98
EPIRB

This page intentionally left blank.

CHAPTER 4
Crew Requirements

Introduction

The *U.S. Coast Guard Boat Operations and Training (BOAT) Manual, Vol. I*, COMDTINST M16114.32 (series), provide minimum standards and guidelines for competence onboard SPC-LE boats. Each crewmember should be familiar with the duties of the other crewmembers in addition to his/her own duties. It is important for a crewmember to know and commit to memory all important characteristics of the boat and its equipment, and which procedures to follow in the event of a casualty. Each crewmember should mentally rehearse the procedures each member of the crew would follow during any operational casualty. Teamwork is the common thread that allows the crew to succeed. Whenever the opportunity is available, the crew should get the boat underway to practice operational and emergency procedures.

In this chapter

This chapter contains the following sections:

Section	Topic	See Page
A	Minimum Crew	4-3
B	Coxswain	4-5
C	Boat Crew Members	4-7
D	Passengers	4-9
E	Safety Equipment	4-11

This page intentionally left blank.

Section A. Minimum Crew

Introduction	Units shall comply with the minimum boat crew requirements prescribed in the *BOAT Manual, Volume I, COMDTINST M16114.32 (series).*
A.1. Certified Boat Crew Member	All Boat Crew Members shall meet the qualification requirements prescribed in the *U.S. Coast Guard Boat Operations and Training (BOAT) Manual, Vol. II*, COMDTINST M16114.33 (series).

This page intentionally left blank.

Section B. Coxswain

Introduction

The U.S. Coast Guard places great trust in each Coxswain and his or her ability to accomplish the assigned missions in a safe and professional manner, even under adverse conditions. The position of Coxswain is one of high regard and great responsibility.

The Coxswain is responsible for the boat, its crew, and passengers during every mission. The Coxswain assigns and directs all onboard functions during each operation.

B.1. Authority and Responsibility

The extent of the authority and responsibility of the Coxswain is specified in *U.S. Coast Guard Regulations*, COMDTINST M5000.3 (series), as follows:

> *"The Coxswain shall be responsible, in order of precedence, for the safety and conduct of passengers and crew; the safe operation and navigation of the boat assigned; and the completion of the sortie or mission(s) assigned or undertaken pursuant to USCG policy and regulations. An underway Coxswain will at all times respond, within the limits of capabilities and legal authority, to observed hazards to life or property, and violations of law or regulations."*

The Coxswain is the direct representative of the Commanding Officer (CO) or Officer-in-Charge (OIC) and, as such, (subject to *Articles 88-89* of the *UCMJ*) has the authority and responsibilities that are independent of rank or seniority in relation to other personnel embarked. The authority and responsibility of the Coxswain exist only when the boat is engaged on a specific sortie or mission.

B.2. Relief of Responsibility

The only person embarked in the boat who may relieve the Coxswain of the responsibility as described above is:

The CO, OIC, Executive Officer (XO), or Executive Petty Officer (XPO).

A senior officer at the scene of a distress emergency, or other abnormal situation, who exercises authority under the provisions of *U.S. Coast Guard Regulations*, COMDTINST M5000.3 (series), whether or not other units are involved.

This page intentionally left blank.

Section C. Boat Crew Members

Introduction

Under direct supervision of the Coxswain, the crew is responsible for line handling, acting as lookout, and assisting the Coxswain as required during all evolutions or maneuvers.

C.1. Certified Boat Crew Member

The Boat Crew Member must be certified in accordance with the *BOAT Manual, Vol. I*, COMDTINST M16114.32 (series) and *BOAT Manual, Vol. II*, COMDTINST M16114.33 (series).

Additionally, the Boat Crew Member may be responsible for operating the communications/navigation equipment as directed by the Coxswain.

C.2. Additional Crewmembers

Additional crewmembers are assigned by the Coxswain and certified by the CO/OIC based upon mission requirements.

This page intentionally left blank.

Section D. Passengers

Introduction

SPC-LEs are designed to carry up to four crew in the cabin. Fourteen additional crew or passengers can be carried in support of various missions, not to exceed designed weight capacity. Crew and passengers shall be seated as directed by the Coxswain.

This page intentionally left blank.

Section E. Safety Equipment

E.1. Personal Protective Equipment

During all boat operations, crewmembers shall wear Personal Protective Equipment (PPE) as required by the *Rescue and Survival Systems Manual*, COMDTINST M10470.10 (series).

WARNING

The use of the engine kill switch is required whenever the boat is started or is underway. The engine kill switch is located on the inboard side of the helm console. The activation clip for the kill switch MUST be inserted over the toggle switch. The lanyard MUST be properly attached to the Coxswain at all times during boat operation. A second kill switch lanyard with activation clip MUST be carried onboard to enable remaining crewmembers to operate the boat safely in the event the Coxswain is ejected.

NOTE

The SPC-LE has a single control panel with key switches for starting and stopping the outboard engines. The SPC-LE control panel has only one engine kill switch, which, if activated, will stop all three engines.

NOTE

The Coxswain is responsible for ensuring that all required personal safety equipment is worn, and worn correctly.

E.2. Seat Belts, Helmets and Gunner Restraints

Since SPC-LEs carry out a wide array of missions in an ever-changing environment, the decision of when to wear seat belts and/or helmets remains at the unit level.

Commanding Officers and Officers in Charge shall routinely discuss seat belt and helmet use with their crews and establish unit policy. Sector Ready For Operations teams shall ensure units have adequate seat belt and helmet policies in place.

Prior to getting underway, as well as throughout the mission, boat crews shall continuously assess and manage risks in accordance with *Team Coordination Training*, COMDTINST 1541.1, and *Operational Risk Management*, COMDTINST 3500.3. During these assessments, the crew should consider whether or not seat belts and/or helmets should be worn. Factors for the crew to consider are:

Sea State
Time of day
Mission
Anticipated boat speed and maneuvering

As always, the Coxswain is ultimately responsible and accountable for the safety of the crew and the boat, as well as the mission. Adherence to unit seat belt and/or helmet policies and safe boat operations is expected at all times.

NOTE

No single piece of PPE will completely eliminate the risk of personal injury that can result when operating a boat irresponsibly. A combination of PPE and prudent, responsible boat handling is required to prevent injury. Seat belts, helmets, and other protective equipment work only to reduce injury. The best way to prevent injuries is to operate the boat responsibly and follow the operational risk management process.

WARNING

Crews are encouraged to “buckle up” regardless of speed, sea state, or mission. Groundings, collisions, and the need to make sudden, unannounced maneuvers can occur at any time. Using seat belts is your best defense from injury. Wearing seat belts at all times is a good habit to learn and practice.

E.3. Boat Gunner Ensemble

The boat gunner ensemble includes:

Helmet – The GENTEX GT-SC132 ballistic (1400 FT Per Second (FPS)) Special Operations Headset Adaptable Helmet (SOHAH) was selected as the MAW capable boat crew helmet. In addition to being compatible with the Boat Crew Communication System (BCCS) and Night Vision Device (NVD), the GENTEX ballistic SOHAH provides boat crews ballistic and bump protection during high risk mission activities. In determining the appropriate helmet for boat crews, the weight of the ballistic (31.6 ounces) versus the non-ballistic (20.8 ounces) helmet was considered. The additional weight of the GENTEX ballistic SOHAH was mitigated by the ballistic protection it provides our boat crews.

Goggles – The Eye Safety Systems, Inc. Profile Night Vision Goggle (NVG) was selected as the ballistic goggle. The goggle is NVD and prescription lens compatible.

Upon receipt, the ballistic helmet and ballistic goggles shall be worn by the boat gunner when manning the Manned Automatic Weapon (MAW). The Coxswain and remaining boat crew shall be guided by the *Rescue and Survival Systems Manual*, COMDTINST M10470.10 (series).

This page intentionally left blank.

CHAPTER 5
Operational Guidelines

Introduction

This chapter describes how to use SPC-LEs in the safest and most efficient manner. These policies and performance criteria should be used as guidelines for boat operations. Within these guidelines, consider *Navigation Rules, International-Inland*, COMDTINST M16672.2 (series), local operating conditions, and the skill of the crew to determine how SPC-LE capabilities are to be used. These factors must be considered prior to each sortie or mission.

In this chapter

This chapter contains the following sections:

Section	Topic	See Page
A	Operating Parameters	5-3
B	Performance Data	5-7
C	Performance Monitoring	5-9

This page intentionally left blank.

Section A. Operating Parameters

Introduction

The readiness of SPC-LEs shall be continuously monitored to ensure that they are capable of unrestricted operations. This monitoring is accomplished through a variety of programs, including daily boat checks, the boat preventive maintenance system (PMS) schedule, engineering inspections, and ready for operation (RFO) evaluations.

Operating parameters for SPC-LE crewmembers include the following areas:

Disabling Casualties
Restrictive Discrepancies
Major Discrepancies
Minor Discrepancies
Responsibilities
Environmental Limits

A.1. Disabling Casualties

Disabling casualties are those that make the boat not serviceable. *Appendix D* contains a listing of disabling casualties. If a disabling casualty is identified, the boat shall not get underway until the casualty is corrected and command notifications are made.

Disabling casualties shall be reported immediately to the CO/OIC. The boat shall be immediately placed in "Charlie" status and repaired. If the casualties cannot be repaired within 48 hours, a casualty report (CASREP) shall be sent within 24 hours of the casualty.

A.2. Restrictive Discrepancies

Restrictive discrepancies are those that restrict the operations of the boat such that it can perform some, but not all, missions safely. *Appendix E* contains a listing of restrictive discrepancies.

A.2.a. Reporting Restrictive Discrepancies

Restrictive discrepancies shall be reported to the CO/OIC if the discrepancy cannot be repaired within 1 hour. The boat shall be immediately placed in "Charlie" status and shall not get underway until the discrepancy is corrected or a waiver has been received. If the discrepancy cannot be repaired within 48 hours, a CASREP shall be sent within 24 hours of the discrepancy. The CO/OIC is responsible for monitoring the progress of repairs to these discrepancies.

A.3. Major Discrepancies

Major discrepancies are those that degrade the effectiveness of the boat to perform one or more missions. *Appendix E* contains a listing of major discrepancies.

A.4. Minor Discrepancies

Minor discrepancies do not affect the operational readiness of the boat. However, a boat with minor discrepancies does not meet the standardization criteria established for the boat.

In the event that the addition of portable equipment, not part of the standard boat outfit, is necessary to meet mission needs, units are authorized to temporarily carry this extra equipment. This authorization is on a case-by-case basis only, and care must be taken to properly secure any extra gear and to ensure it does not interfere with safe egress or the boat's standard outfit/systems. Under no circumstances shall permanent alterations be made to power, stow or in any way accommodate extra equipment.

A.5. Responsibilities

The Coxswain is always responsible for the safe operation of the boat. The Coxswain must decide if the mission warrants subjecting the crew and boat to the danger defined by the mission, weather, and sea conditions anticipated.

A.5.a. Disabling Casualty - Underway

In the event that the boat sustains a disabling casualty while underway, the boat crew shall inform the Coxswain who will immediately contact the CO/OIC or Operational Commander.

A.5.b. Restrictive Discrepancy - Underway

In the event the boat sustains a restrictive discrepancy while underway, the Coxswain should not normally proceed without authorization, unless aborting the mission would increase the level of risk. The situation and recommendations must be effectively communicated to the Operational Commander to allow for prudent risk assessment by all levels. The following is the procedure for communicating the discrepancy while underway:

Step	Procedure
1	The Coxswain shall immediately notify the CO/OIC with all pertinent information and a recommendation as to whether to continue or abort the mission.
2	The CO/OIC shall notify the Coxswain as to whether or not continuing the mission is authorized and the conditions under which the boat may be operated.

A.5.c. Major Discrepancy

The occurrence of major discrepancies shall be documented. A plan to correct these discrepancies shall be formulated and carried out. The Operational Commander is responsible for monitoring the status of repairs to these discrepancies.

A.5.d. Minor Discrepancy

The occurrence and repair of minor discrepancies shall be documented and monitored at the unit level.

Casualty/Discrepancy	Consequence	Required Action
Disabling Casualty "Boat is not serviceable."	Not authorized to get underway. Notify the CO/OIC immediately.	Assign "Charlie" status to the boat and commence repairs immediately. Submit CASREP if applicable.
Restrictive Discrepancy "Boat and crew cannot perform all missions safely."	Operations restricted. Notify CO/OIC if repairs cannot be made in 1 hour.	Create repair plan and set deadline for completion of repairs. CO/OIC shall monitor progress of repairs. Any operations before restrictive discrepancies are repaired require written waiver by the Operational Commander. Submit CASREP if applicable.
Major Discrepancy "Boat and crew can perform all missions, but some degradation in effectiveness or readiness should be expected."	Operations unrestricted. Discrepancy occurrence and repair is documented.	Maintenance plan is carried out. CO/OIC shall monitor status of repairs to the discrepancies.
Minor Discrepancy "Boat and crew readiness not affected nor impaired. Boat does not meet standards."	Operations unrestricted. Discrepancy occurrence and repair is documented.	Maintenance plan is carried out. CO/OIC monitors completion of maintenance/repair.

A.6. Environmental Limits

WARNING

The following is a list of critical operational and environmental limitations:

- maximum sea state for transiting (8 FT, no surf)
- maximum operating winds 30 KTS
- maximum towing capacity 20 gross tons or 50 FT length
- maximum operating distance from shore 30 NM
- outside air temperature 0°-105° F
- outside water temperature 28°-95° F
- no operations are to be conducted in ice

WARNING

Do not operate in breaking seas or surf conditions.

Section B. Performance Data

B.1. Fuel Consumption

Fuel consumption and operating range are affected by engine tuning, weather conditions, trim, type of evolution, and operating area. The SPC-LE is capable of operating a maximum of 250 NM at 35 KTS with a normal load (full load of fuel, liquids in machinery at normal levels, crew of four). Fuel consumption information may be found in **Table 5-1.**

Table 5-1
Fuel Consumption Information

Engines: (3) Mercury Verado, 275 HP, 4 stroke
Fuel tank capacity: 300 gallons
Propellers: Mercury Revolution 4 14.625 inch diameter by 19 inch pitch, RH-LH

RPM	KTS	GPH Each engine
6100	47.0	28.5
5000	42.5	17.9
4500	37.5	14.3
4000	33.0	11.0
3500	27.0	8.1
3000	19.0	6.8
2000	7.0	3.2
1500	6.5	1.7
1000	5.0	1.0

WARNING

The Coxswain is responsible for ensuring that all required personal safety equipment is worn, and worn correctly.

B.2. Sea Keeping

Positioning the vessel with respect to the wind, seas, and other craft is essential to prevent damage to the hull or injuries to the crew.

B.2.a. Operating in Beam Seas

Operating with the seas on the beam is more uncomfortable than dangerous when following basic boat handling guidelines. Use the following techniques to minimize danger:

Tacking – With large seas on your beam, tack across the seas at a slight angle in a zigzag fashion. This prevents exposure of the beam to heavy swells.

Changing Course – To change course heading, allow the boat to lose headway, turn the wheel hard over, and apply power to come smartly to the new heading.

B.2.b. Operating in Following Seas

Following seas present the greatest dangers to SPC-LEs. The boat does not have the balanced buoyancy or ability to lay-to in a following sea. The operational limitations are the controlling guidelines and must be followed at all times. Consider the following point and technique when operating under these conditions:

Do not power the boat over the crest of a wave and into the trough of the next wave or bury the bow into the back of the next wave.

B.3. Stability

By virtue of hull design and equipment placement, SPC-LEs provide for stable maneuvering through all operating speeds. Ensuring the deck areas are always free of water and eliminating the free surface effect of liquids are essential to maintaining stability of the boats.

B.4. Speed

SPC-LEs achieve a top speed of approximately 45 KTS at 6400 RPM.

NOTE

Do not use rapid accelerations from dead-in-the-water (DIW) to full speed except when necessary. This conserves fuel and helps prolong engine life.

NOTE

Avoid rapid acceleration, unless absolutely necessary, to prolong engine life and conserve fuel. Maximum speed/power should only be used when operationally necessary. Under non-urgent conditions, operate the boat at cruise speed.

Section C. Performance Monitoring

C.1. Performance Monitoring

It is essential that the Coxswain and crewmembers be aware of installed monitoring equipment, gauges, and warning indicators to ensure safe and efficient operation of the SPC-LE propulsion and ancillary systems. Crewmembers should be aware of the "normal range" or indication of all gauges and indicators, and report and react accordingly when changes occur.

C.2. Controls

The panels surrounding the helm (**Figure 5-1**) contain the following:

Ignition key switches
Engine kill switch
Multi-function engine gauges
Generator control and gauges
Heating and air conditioning control
GPS display
Multi-function display

Figure 5-1
Helm Console

C.3. Engine Gauges and Warnings

Four gauges are mounted on the helm console (**Figure 5-2**). One gauge displays boat speed, the other three gauges display engine RPM. The gauges monitor the critical sensors on the engines for any indications of problems. When a potentially damaging fault is detected, the system will reduce engine speed, sound the warning horn, and display a warning message on the gauge.

C.3.a. Gauge Operation

Each gauge will power up when the ignition is turned on. The gauges will stay on as long as the ignition is on.

When a problem is detected, the "SYS FAULT" message appears on the display. Press the "+" button to show the faulty component. The upper bar in this screen displays the system where the fault is located. The faulty component is described in the scrolling text. Press the "+" button again to display a detailed description of the fault. Press the "+" again button to display the required corrective action.

The alarm message will stay displayed until the "-" button is pressed. If there are multiple alarms, press the "MODE/SELECT" button to display them.

If the "MODE/SELECT" button is pressed to display a different screen, the flashing alarm signal "AL" will appear in the upper right corner to indicate there still is a problem.

Figure 5-2
Engine Gauges

C.3.b. Speedometer Gauge Functions

The speedometer gauge displays the following information:

1. Fuel Level: Displays the amount of fuel remaining.
2. Digital Speedometer: Displays the boat speed in miles per hour, kilometers per hour, or nautical miles per hour.
3. Fuel Economy: Displays the average "AVG" fuel consumption as well as instantaneous "INST" fuel economy. The numbers displayed indicate miles per gallon "MPG" or kilometers per liter "KM/L". Fuel Reset: To reset, select the display screen and press "MODE" and "-" simultaneously.
4. Trip Odometer: Displays the distance traveled since the gauge was last reset to zero. Trip Reset: To reset, select the display screen and press "MODE" and "-" simultaneously.
5. Air and Water Temperature.

C.3.c. Tachometer Gauge Functions

The tachometer displays the following information:

1. Engine Break-In: Displays the time remaining on the break-in period of a new engine. This screen will automatically disappear after the break-in period is complete.
2. Quick Reference Screen: Indicates that the battery, engine temperature and pressures are operating properly.
3. Temperature: Displays the engine coolant temperature.
4. Power Trim Angle: Displays the trim angle of the outboard up to the maximum trim angle and then displays the trailer angle. 0 = down, 10 = maximum trim, and 25 = full trailer.
5. Power Trim Angle/Water Pressure: Displays the trim angle of the engine and cooling system water pressure.
6. Water Pressure: Displays the cooling system water pressure at the engine.
7. Oil Pressure: Displays the engine oil pressure in "PSI" or "BAR".
8. Battery Voltage: Displays the voltage level (condition) of the battery.
9. Fuel Flow: Displays the engine fuel use in GPH or liters per hour.
10. Digital Tachometer: Displays the engine speed in revolutions per minute (RPM).

This page intentionally left blank.

CHAPTER 6
Mission Performance

Introduction

The actions and techniques described in this chapter are products of field experience. They are intended to give boat crewmembers information on how SPC-LEs perform and react in various mission scenarios. The information is not intended to provide the "only way" to perform an action or complete a mission. Boat crews should use effective communications and teamwork skills along with this general information to adapt their actions to each unique mission scenario.

Information in this section alone does not qualify a crewmember. Observe these procedures and apply skills developed through practice to effectively use SPC-LEs to perform missions.

In this chapter

This chapter contains the following sections:

Section	Topic	See Page
A	Starting Procedures	6-3
B	Underway	6-5
C	Going Alongside Boats and Targets of Interest	6-7
D	Handling Characteristics	6-9
E	Operating with Helicopters	6-13
F	Anchoring	6-15
G	Towing	6-17
H	Securing Procedures	6-19

This page intentionally left blank.

Section A. Starting Procedures

Introduction

The following procedures must be followed before starting a cold engine.

A.1. Pre-Start

The following pre-start checks must be accomplished before the first mission of the day and prior to engine start:

Step	Action
1	Ensure hull fuel tank is full. Use fuel level gauge as required.
2	Check fuel filter sediment/water bowls for presence of contamination. Drain sediment/water bowls as required.
3	Ensure the port and starboard cooling water intakes on the lower engine shaft housing are free of debris.
4	Check outboard engine cover gaskets for damage. Check that outboards are secure to the transom and all mounting hardware is tight.
5	Trim engines down until lower unit is submerged (ensure full tilt/trim travel on each engine).
6	Ensure engine oil level is filled to 'FULL' mark.
7	Check hydraulic steering system for leaks at helm and at steering ram by outboards.
8	Ensure the engine kill switch clip is installed and lanyard is attached.
9	Install start keys and turn key to *on* position. Ensure the engine alarm system is operating.

A.2. Engine Starting

The following procedures must be followed for starting the engines:

Step	Action
1	Set throttle levers to *neutral* position.
2	Ensure electronics, antennas, and speakers are secured.
3	Ensure the engine kill switch clip is installed and lanyard attached. One spare clip and lanyard must be onboard and stored inside the cabin.
4	Turn key to *start* position and immediately release. Repeat until engine starts.
5	Check outboards for nominal or adequate cooling water output at telltale discharge on each engine.
CAUTION !	If cooling water output is not evident, immediately secure engine and investigate.
6	Check crew and passengers for appropriate PPE including helmets (if required).

A.3. Energizing Equipment

The following steps must be completed prior to getting underway:

Step	Action
1	Close (turn *on*) all of the remaining breakers on the 12 VDC power panels.
2	Energize and test all installed electronic components.
3	Conduct a test of the hydraulic steering ensuring that motors respond appropriately.
4	Test throttle operation in *forward* and *reverse*.
5	Ensure gear is properly stowed and watertight integrity is set.
6	Inform Coxswain on the status of all engineering and electronic systems and that the boat is ready to get underway.

Section B. Underway

Introduction

It is the responsibility of the Coxswain and crewmembers to ensure that, once the vessel is underway, the boat and its systems are operated in a safe and efficient manner. The safety of the crew and any embarked personnel is also incumbent on all crewmembers.

After getting underway, observe all appropriate machinery gauges. If an abnormal condition develops, take corrective action to prevent further damage in accordance with the *BOAT Manual*, *Vol. I*, COMDTINST M16114.32 (series). Report any abnormal conditions to the Coxswain.

B.1. Personal Protective Equipment

Always observe requirements of this handbook, the *Rescue and Survival Systems Manual*, COMDTINST M10470.10 (series), and the *Boat Crew Seamanship Manual*, COMDTINST M16114.5 (series), for wearing protective clothing, personal flotation devices, and boat crew signal kits.

B.2. Communications

Crew communications and coordination is the key to safe operations. Crewmembers should inform the Coxswain of their location when moving about the deck. Engine noise can make crew communications difficult on SPC-LEs. Speak loudly and clearly, and repeat as necessary until acknowledged.

NOTE

When operating the boat with minimal crew, effective crew communications are critical. Speak loud enough to be heard over the background noise. Ensure the receiver hears and understands the message being passed. A common strategy is to have the receiver repeat back the message that was sent.

NOTE

The enclosed steering station can create a sense of isolation from the elements and other marine traffic. Crewmembers should use all available means to maintain awareness of wave action, winds, currents, and traffic.

This page intentionally left blank.

Section C. Going Alongside Boats and Targets of Interest

Introduction

The following is a generic procedure for going alongside. SPC-LE crews must be familiar with the applicable U.S. Coast Guard instructions and Standard Operating Procedures (SOP) for going alongside a target of interest and shall be accomplished in accordance with the *Boat Crew Seamanship Manual*, COMDTINST M16114.5 (series), *Chapter 10*.

The height of the cabin and the narrow side deck makes SPC-LE's cabin, door, and windows vulnerable to damage when coming alongside another vessel. Sea state, location of installed rub rails, and the flare of the other vessel's hull increases the likelihood of damage if the two vessels roll towards each other. A thorough risk assessment, including asset selection, is essential to reduce the potential of personnel injury and property damage. Rigging fenders along the cabin's handrail may further reduce damage.

WARNING

When going alongside a vessel with a high freeboard, rig fenders along the cabin's handrail to prevent damage to the cabin.

Step	Action
1	Ensure that communications between the SPC-LE and the Operational Commander are established and reliable.
2	Attempt to make and establish contact with the target of interest on designated marine band frequencies.
3	Make approach preparations and inform the crew. The Coxswain should determine where to make contact with the vessel.
WARNING	Pick a contact point well clear of a larger vessel's propeller (including in the area of suction screw current), rudder, and quarter wave. Forces from these could cause loss of control.
4	Conditions permitting, match your speed to the other vessel and then start closing in from the side.
5	Close at a 15° - 30° angle to the other vessel's heading. This should provide a safe rate of lateral closure at no more than $^{1}/_{2}$ the forward speed.
NOTE	If your initial heading was parallel to the other vessel, you will have to increase speed slightly when you start to close at an angle.
WARNING	Applicable U.S. Coast Guard instructions and SOP must be strictly adhered to when/if the SPC-LE is in close proximity to any vessel that fails to identify itself.

NOTE	As both the SPC-LE and target of interest have headway, the pressure of the water on the boat's bow will cause it to sheer away from the target of interest. Use this force by touching on the helm to control sheer, in or out, by catching the current on one side of the bow or the other side.
NOTE	When sheering in or out, apply rudder slowly and be prepared to counteract the tendency of the boat to close or open quickly.
6	Come alongside of the vessel, matching its course and speed.
7	Use helm to hold the boat at the desired position alongside or at some distance off the vessel.
CAUTION !	Use care when going alongside a target of interest so as not to damage the collar.
8	Make contact with the forward sections of your boat (about halfway between the bow and amidships). Use helm and power to hold the bow into the other vessel at the same forward speed. Do not use so much helm or power that you cause the other vessel to change course.
9	Ensure that communication with the Operational Commander is established to update the status of the assigned mission. If personnel are to be embarked/disembarked on the target of interest, utilize a boarding ladder as provided. Minimize the time alongside. If necessary, and following U.S. Coast Guard instructions and SOP, "make-up" to the other vessel rather than relying on helm and power to maintain contact.
10	When the mission is complete, embark all personnel. Sheer the stern in with the helm to get the bow out. Avoid getting set toward the side or stern of the vessel.
CAUTION !	Never back down when clearing alongside, parallel to another vessel that is making way. Outboard powered vessels with a large portion of weight aft are susceptible for shipping water while backing, particularly in a chop.
11	Apply gradual power to gain slight relative speed. Maneuver the boat away from the target of interest. Continue to update position and status of the mission with the Operational Commander.

Section D. Handling Characteristics

Introduction

Boat handling is a complex skill that requires knowledge and practical, underway experience to build confidence and skill level. Always use forethought and finesse when handling the boat. Know the boat's handling features, monitor weather conditions, and be aware of the operating limitations of the boat.

In this section

This section contains the following information:

Topic	See Page
General Boat Handling	6-9
Turning and Pivoting	6-10
Head Seas	6-10
Beam Seas, Following Seas, and Quartering the Seas	6-11
Effects of Wind	6-12
Station Keeping	6-12

General Boat Handling

D.1. Characteristics

The SPC-LE is a powerful, highly maneuverable platform that requires a solid understanding of boat handling concepts, particularly the effects of trim on hull efficiency, engine performance, and reduction of impact stress and injuries to boat crews. In addition, Coxswains and crews should be familiar with the capabilities, limitations, and handling characteristics of the boat, as well as their own personal training and experience levels.

When operating at high speed, it is critical that the engines be trimmed down (in) before making hard turns or maneuvers. Trimming the engines down (in) causes the bow of the boat to be pushed down by the thrust of the engines and is considered the safest position when accelerating, performing hard maneuvers, and heading into wind and waves.

Performing high-speed turns and maneuvers with the engines trimmed out (up) or level can result in hooking a chine, where the chine of the boat abruptly catches the water. The result can be violent in nature, the physical forces of which may cause personnel in the boat to be thrown in the direction of momentum.

WARNING

High-speed turns while "trimmed out" (up) or "trimmed level" can result in "hooking a chine", causing a violent reaction which may create immediate loss of control of the boat and sufficient force to pitch crewmembers overboard.

CAUTION !

The SPC-LE is sensitive to changes to the Longitudinal Center of Gravity (LCG). These changes can occur by adding or subtracting weight, or through simple crew movements. These changes will change the boat handling in any given situation. The Coxswain must assess any LCG change and may have to make many trim adjustments during a sortie.

Prior to making a high-speed or tactical turn, crews and passengers must be forewarned and given the opportunity to prepare themselves for the maneuver. The forces created as the boat turns at high speeds will result in injury and ejection if crews are not properly restrained.

Turning and Pivoting

D.2. Characteristics

Each SPC-LE turns or pivots, for steering purposes, on its vertical axis at approximately mid-cabin when fully trimmed in. Because of this characteristic (which provides other benefits such as straight-line tracking and planing), Coxswains must be aware of the boat's turning capabilities.

WARNING

High-speed turns while improperly trimmed may result in injury to the crew or damage to the boat.

D.2.a. Turning on Plane

Avoid making sharp, high-speed turns while improperly trimmed. Due to the reduced amount of wetted surface (hull in water), sharp, high-speed turns may result in "hooking a chine". This can be hazardous and may result in injury to the crew or damage to the boat. If a sharp turn is required, trim the engines in before turning.

Head Seas

D.3. Buoyancy

The primary consideration when advancing in head seas is to maintain forward momentum and keep the bow into the swell. The buoyant construction of the boat allows it to ride up over oncoming seas.

D.4. Over-Acceleration

When heading into the wind and up the face of large waves, care must be taken to avoid over-accelerating, which can result in the bow being caught and creating a pitch-pole situation where the boat is inverted end-over-end.

Beam Seas, Following Seas, and Quartering the Seas

D.5. Beam Seas

Whenever possible, the Coxswain should avoid steering a course parallel (broadside) to heavy swells. Tack across the swells at a 30° to 40° angle. If necessary, steer a zigzag course, making each leg as long as possible, and adjust the boat speed for a safe and comfortable ride. Seas directly off the beam of the boat can cause adverse rolling conditions.

When transiting parallel to the seas, the boat will tend to ride the contour of the wave surface. This means that the boat's vertical axis will remain perpendicular to the surface on which the boat is operated. A wave face of 20° will cause a 20° heel.

D.6. Following Seas

Following open swells up to 8 FT can be safely negotiated as long as the boat remains stable as it travels down the front of the swell. Powering over the crest of a wave can cause the bow to bury into the back of the next wave and cause extensive damage. In bad weather, SPC-LEs are relatively safe, running before the sea due to their speed.

NOTE

Extreme caution should be exercised when operating in following swells (Refer: Section 5.B.2.b Operating in Following Seas).

D.7. Quartering the Seas

Taking larger head seas slightly off either bow can create a more comfortable ride, as the boat may proceed more gently off the back of the wave instead of slamming violently. The speed and angle of approach will have to be adjusted as needed for the optimum ride. This is sometimes referred to as quartering the seas, which is not to be confused with taking a following sea on the quarter.

Effects of Wind

D.8. Maneuverability

In calm or negligible wind and seas, SPC-LEs respond well using standard multi-screw operating practices. In stiff winds, several design features combine to make handling this boat challenging. With the majority of weight and the deepest draft aft, the bow is very susceptible to the effects of the wind. Moderate winds may have an effect on maneuverability and can often be the predominant environmental factor in maneuvering situations. In some cases, it can be difficult to recover and turn the bow into the wind at slow speeds.

Station Keeping

D.9. Stern-To

Station keeping requires concentration to maintain a constant heading and position. The boat tends to work well with its stern to the wind as the bow tends to "weathervane" downwind. If stern-to station keeping is not an option, the operator must use extra care to counteract environmental factors.

Section E. Operating with Helicopters

Introduction

The SPC-LE was not designed to conduct helicopter hoisting operations and presents many safety obstacles. Therefore, conducting helicopter training on this platform is **prohibited**.

In the event of an extreme emergency requiring helicopter hoists from a SPC-LE, crewmembers shall rely on knowledge gained from qualification tasks associated with boat crewmember training and appropriate operational risk management.

In the event of an emergency requiring a helicopter hoist, the on-scene helicopter pilot shall provide appropriate instruction for a safe hoisting evolution.

This page intentionally left blank.

Section F. Anchoring

WARNING

If the anchor line fairlead is from any point other than the bow, there is the potential for a tripping hazard and possible capsize. Never anchor from the stern.

Introduction

Care must be taken when anchoring to ensure that the anchor line fairlead is over the bow.

NOTE

Anchoring procedures are described in the *Boat Crew Seamanship Manual*, COMDTINST M16114.5 (series).

This page intentionally left blank.

Section G. Towing

Introduction

Towing a disabled vessel requires a high degree of awareness of all potential hazards, as well as full knowledge of the capabilities and limitations of the particular components within the towing operation. The safety of your crew and the crew of the towed vessel is more important than property.

NOTE

Towing procedures are described in the *Boat Crew Seamanship Manual*, COMDTINST M16114.5 (series).

WARNING

The SPC-LE was built and outfitted for speed and tactical maneuverability. While capable of towing vessels up to 20 GWT or 50 FT LOA, towing with the SPC-LE induces stress on the high-performance engines resulting in lower unit/engine failures. The SPC-LE should not be used for routine towing.

WARNING

Due to their limited size and hull design, SPC-LEs are more susceptible to tripping. A boat is said to be tripping when it is towed sideways by an opposing force on its own towline. There is imminent danger that a boat will capsize when in a tripping situation. If your vessel is caught in a tripping situation, the Coxswain must attempt to maneuver to position the stern back under the towline, or sever the towline at the bitt.

G.1. Angular Momentum

Overcoming angular momentum can be far more hazardous on smaller non-displacement hulls such as the SPC-LE. When changing the direction of the tow, the towed vessel will develop angular momentum; the vessel's heading begins to change and it wants to keep changing in that same direction. Attempts to correct angular momentum can create a tripping hazard. Coxswains need to anticipate how the momentum will affect the towed vessel's motion and apply an offsetting force early and gradually.

G.2. Alongside Towing

The height of the cabin and the narrow side deck makes the SPC-LE's cabin, door, and windows vulnerable to damage when coming alongside another vessel. Sea state, location of installed rub rails, and the flare of the other vessel's hull increases the likelihood of damage if the two vessels roll towards each other. A thorough risk assessment, including asset selection, is essential to reduce the potential of personnel injury and property damage. Rigging fenders along the cabin's handrail may further reduce damage.

WARNING

When going alongside a vessel with a high freeboard, rig fenders along the cabin's handrail to prevent damage to the cabin.

This page intentionally left blank.

Section H. Securing Procedures

Introduction

Once a mission is complete, it is essential that boat equipment be correctly secured to enhance subsequent equipment performance and equipment longevity.

H.1. Procedure

The following procedure should be completed after each mission:

Step	Action
1	Secure all non-essential electrical and electronic gear.
2	If operated, ensure heating system is “cooled down” prior to securing.
3	Ensure all equipment necessary to moor the boat is available on deck.
4	If necessary, lower the portable tow light mast, folding radar pod, and VHF-FM antennas.
5	Idle and stop engines.
6	Secure all non-essential breakers and switches on the 12 VDC power panels.
7	Turn the battery and accessory battery switches to the *off* position.
8	Secure all pyrotechnics, weapons and ammunition as directed by U.S. Coast Guard instruction or station operating requirements.
9	Check and refill all machinery fluid levels.
10	Refuel the boat.
11	Raise the engines out of the water when the boat is moored for prolonged periods of time, unless freezing temperatures are expected.

NOTE

Keeping the boat clean and neat is very important to control corrosion. Having aluminum in contact with dissimilar metal, particularly a copper alloy, can cause major corrosion problems. Something as small as a penny left in the bilge can cause serious damage. Maintaining corrosion control is the responsibility of everyone in the crew.

NOTE

The mission is not complete until the boat is ready for the next mission.

This page intentionally left blank.

CHAPTER 7
Emergency Procedures

Introduction

Responding to equipment casualties and emergencies aboard SPC-LEs should be second nature to all members of the crew. The ability of crewmembers to take immediate action to control emergencies is critical to prevent a bad situation from getting worse. While every event is different, systematic procedures help gain control of the casualty and aid in troubleshooting.

The first step in responding to all casualties is to protect the immediate safety of all crewmembers and to communicate the nature of the casualty to the crewmembers. It is the Coxswain's responsibility to keep the Operational Commander informed of all emergencies encountered during the operation of the boat.

The Coxswain and crew should work together to determine if equipment casualties can be safely repaired while underway. The Coxswain must decide whether a casualty has affected the ability of the boat and crew to complete the mission. The Coxswain should not make the decision in a vacuum; input from other crewmembers, as well as communication with the Operational Commander, should be used to determine whether to continue with the mission. The following factors should be considered:

	Factors
1	The safety and physical condition of the crew and vessel.
2	Equipment limitations due to the casualty.
3	Current and forecasted weather and sea conditions.
4	The urgency of the mission.

In this chapter

This chapter contains the following sections:

Section	Topic	Page
A	Capsizing	7-3
B	Steering Casualty	7-9
C	Loss of Control of Engine RPM	7-11
D	Loss of Fuel Pressure	7-13
E	Loss of Lube Oil Pressure	7-15
F	Engine High Water Temperature	7-17
G	Damage to Collar	7-19
H	No Power/Insufficient Power to Communications/Navigation Equipment	7-21

Section A. Capsizing

A.1. Introduction

The Coast Guard SPC-LE is a fast, highly maneuverable platform, capable of performing a variety of missions in 8 FT seas and 30 KT winds. The protective cabin on this vessel provides ample protection in a maritime environment; however, it also raises concerns of crew safety and egress in the unlikely event of capsizing.

A.2. Prevention

The best way to survive a capsizing is to never place yourself in a position that can lead to a capsizing. The *Boat Crew Seamanship Manual*, COMDTINST M16114.5(series), provides excellent recommendations on how to prevent a capsizing situation.

NOTE

Boat crew personnel should be familiar with the *Boat Crew Seamanship Manual*, COMDTINST M16114.5 (series), *Chapter 16, Water Survival Skills*.

A.3. Potential Causes

Four scenarios are likely for a SPC-LE to become capsized. They are:

High-Speed Maneuver: Operating the boat in a high-speed/high-maneuver environment may result in loss of control leading to capsizing. High-speed hard turns while “trimmed out” or “trimmed level” can also result in “hooking a chine,” causing a violent reaction which may lead to capsizing.

Boarding Operations: The boat, alongside another vessel, may capsize because of rolling motion of the adjacent craft. Outlying gear, including fishing apparatus, accommodation ladders, and rigging, may also entangle with the boat, causing it to capsize.

Extreme Seas/Surf: A SPC-LE may also capsize because of the loss of maneuverability or power when operating in extreme seas or surf conditions.

Towing: The SPC-LE towing another vessel can experience “tripping.” Tripping occurs when the tow line becomes sideways or perpendicular to the boat.

NOTE

After capsizing, if possible, climb atop the hull. The boat is inherently buoyant even after capsizing. The boat is designed to remain afloat with crewmembers on it in capsized position.

A.4. Precautions

If the hull is intact after capsizing, the SPC-LE will not sink for some time, even in rough seas. The crew will have time to escape if panic is avoided. Precautions ahead of time include:

Learn the boat's interior. Initially, the crew will be disoriented due to being upside down with a lack of lighting.

Stow all loose gear and have all equipment and doors operating properly for ease in escaping.

Know the location and use of all survival equipment. Check it regularly to be sure that it is adequate, in good repair, and that all signaling devices work.

Be ready to grab a sturdy support to prevent being thrown about and to provide a point of reference.

A.5. Egress Hazards for SPC-LE Boat Crews

Boat crews must be thoroughly familiar with capsize and egress hazards specific to SPC-LEs. These hazards differ depending on door/window configuration at the time of capsizing.

The air pocket in the cabin when inverted may be useful; however, the motion of the boat due to surrounding seas may make it difficult to rely on this air pocket for long, and may disorient the crew.

Once inverted, doors, windows, and hatches are oriented completely opposite from normal. Crews must realize that opening devices that are instinctively operated will be located on the opposing sides. For example, instead of using a downward pull on the cabin's side door handle, an upward pull on the handle is needed to release the door's catch when the boat is inverted.

Visibility may be hindered due to low or no lighting. Egress may have to be accomplished in low or no lighting conditions.

The sliding side doors were relatively easy to open during the testing. However, it should be noted that this may not be the case for a boat that has been in service for a long time, or has suffered damage during the capsizing event. Crews should keep this in mind when selecting an egress route.

Egress through the forward cabin door is not recommended. Gear adrift tends to collect in the cuddy cabin, and once through the door, the crew would then have to further egress from the underside of the forward deck. If a weapon were mounted forward, this would be an additional impediment.

Egress through the aft door is also less than ideal. Once through the aft door, the crew would then have to further egress from the underside of the aft deck. The towing bitt and towline may endanger the crew, and with the fuel fill and vent located aft, the likelihood of fuel entrapped in this area is high.

Increased buoyancy from your Type III PFD, anti-exposure coveralls, air trapped inside the dry suit, and inflated PFDs will make it difficult (but not impossible) to egress safely from the cabin of a capsized SPC-LE.

NOTE

The preferred method of egress from a SPC-LE is through the port/starboard sliding doors. Attempt egress from the aft or forward cabin door only as a last resort.

CAUTION !

Do not lock the weather tight doors while operating the boat!

With the weather tight windows and doors closed, a SPC-LE's cabin will provide considerable buoyancy, which will cause the boat to take on a "bow up" profile with much of the cabin remaining above water.

Releasing restraints while suspended may result in head injuries.

Opening windows/doors will allow incoming water to fill the cabin quickly, dislodge occupants, and interfere with egress.

In rough seas, the water level and rate of fill in the cabin may change dramatically and quickly.

Fuel and fuel vapors may exist in the cabin and on the surface in areas surrounding the boat following capsizing. Crewmembers must be cognizant of the smell of fuel and egress immediately if vapor or the appearance of oil is evident on the surface within the cabin.

In situations where the doors/windows are open and the cabin floods quickly:

Releasing restraints while inverted may result in confusion and loss of reference points.

Occupants attempting to get upright and breathe in the remaining air pocket (this pocket will vary in width from none to approximately 2 FT) may suffer head/body injuries and swallow water in rough seas.

A.6. Egress Procedures

Boat crews must be thoroughly familiar with capsize and egress procedures specific to the SPC-LE. These procedures will differ depending on door/window configuration at the time of capsizing.

A.6.a. Egress Procedures with Doors/Windows Closed

During a capsizing event where the cabin does not sustain significant damage and the windows and doors remain secured and in tact, the SPC-LE cabin does not immediately flood. It will likely assume a “bow-up” profile with much of the cabin out of the water. In this position, there is a possibility that the boat may roll back over with subsequent wave action. If it does not roll back over to its upright position, the weather proof windows and doors will eventually leak and flood the cabin, at which point the hull will come to rest inverted and level at the flotation collars. In situations where the cabin does not immediately flood:

1. Prepare and brace for impact.

2. Remain strapped in and hold onto a reference point until the violent motion subsides.

3. Remain strapped in and quickly perform crew coordination. Assess the situation and condition of all occupants. Plan your egress route prior to opening exit doors. The preferred way to escape from a SPC-LE is to egress through the either of the sliding side cabin doors. If the sliding doors appear to be damaged or do not open, egress from the aft cabin door. Water pressure against the closed aft cabin door may be difficult to overcome. When egressing through the aft cabin door, you must swim under and away from the main deck area. Egress through the forward hatch is the least preferred route and should be used as a last resort. Egress through the forward hatch requires swimming through the cuddy cabin and away from the foredeck area.

4. While remaining strapped in, grab a reference point with one hand and open the side door with the other to allow water to flood the compartment. Remaining strapped in will prevent occupants from being thrown about with the in-rushing water.

5. Continue to hold onto the reference point with one hand. When in-rushing water slows, release restraint while maintaining hold of the reference point and pull hand-over-hand to a pre-determined exit. Open exit if necessary and pull sharply through exit.

6. Swim clear of the boat and inflate personal flotation device if applicable. Muster as directed.

WARNING

Automatic inflatable PFDs will activate inside the cabin of a capsized SPC-LE.

A.6.b. Egress Procedures with Doors/ Windows Open

With the windows/doors open, water will immediately fill the cabin and the boat will come to rest inverted and level at the flotation collars. In situations where the cabin floods immediately:

1. Prepare and brace for impact.
2. Remain strapped in and hold onto a reference point until the violent motion subsides.
3. When in-rushing water slows, maintain hold on reference points and pull hand-over-hand to pre-determined exit, open exit if necessary, pull sharply through exit.
4. Swim clear of the boat and inflate personal flotation device if applicable. Muster as directed.

WARNING

Automatic inflatable PFDs will activate inside the cabin of a capsized SPC-LE boat.

A.7. Post Egress Procedures

Every effort should be made to escape from a capsized boat. Following egress, crewmembers should take the following action:

1. Muster the crew and passengers and account for any missing occupants.
2. Remain upwind/up current to prevent ingestion of gasoline that may be present.
3. Attempt to climb aboard the inverted hull.
4. Check for injuries and administer first aid to the best of your abilities.
5. Conduct an inventory of signaling equipment. Activate Personal Locator Beacon (PLB).
6. Check for the presence of gasoline in the water before activating pyrotechnic signaling devices.
7. Stay with the boat and do not swim for shore. Distances to the beach can be deceiving, and strenuous activities such as swimming in cold water can hasten the onset of hypothermia.

Section B. Steering Casualty

B.1. Symptom(s)

Sluggish response or no response when wheel is turned to port or starboard.

B.2. Actions

When partial or complete steering loss occurs, take the following actions:

Step	Action
1	Coxswain notify and direct the crew to investigate the casualty and report status, cause and, if applicable, estimated time to repair.
2	Notify the Operational Commander of the casualty.
3	Check for steering fluid in the engine well deck, around the helm pump, and adjacent to the transom near the steering actuator.
WARNING	Do not turn the wheel while crewmembers are inspecting the steering system linkage.
4	Ensure that all lines and fittings in the steering system are installed and tight.
5	Report all findings to the Coxswain.

This page intentionally left blank.

Section C. Loss of Control of Engine RPM

C.1. Symptom(s)

Throttle position changed with no apparent change in engine RPMs.

No ahead or astern movement of the boat.

C.2. Actions

When the engine fails to respond to throttle commands, take the following actions:

Step	Action
1	Coxswain notify and direct the crew to investigate the casualty and report status, cause and, if applicable, estimated time to repair.
2	Crewmembers should: Check throttle and shift control cables. Check throttle arm on engine. Check throttle connections and appropriate breakers. Report all findings to the Coxswain.
3	If required, secure engine while in gear.
4	Coxswain report status of casualty to the Operational Commander.

This page intentionally left blank.

Section D. Loss of Fuel Pressure

D.1. Symptom(s)

Erratic or unstable engine RPMs.

Engine stops completely.

D.2. Actions

When it appears that the engine has sustained a loss of fuel pressure, take the following actions:

Step	Action
1	Coxswain notify and direct the crew to investigate the casualty and report status, cause and, if applicable, estimated time to repair.
2	Verify the fuel tank level at the gauge on the Coxswain's console. Sound the fuel tank to ascertain tank level.
3	Crewmembers should: Check the aft compartments and the engine well deck for fuel. Check for the presence of fuel around the engine cover. Check the condition of the (Racor) fuel filters. Check engine fuel lines for holes or loose connections. Check engine gauges for an engine fuel filter and water separator alarm condition. Report all findings to the Coxswain.
4	Coxswain report status of casualty to the Operational Commander.

This page intentionally left blank.

Section E. Loss of Lube Oil Pressure

E.1. Symptom(s)

Loss of engine power when throttle is increased.

Horn alarm with a fault message on the engine gauge.

E.2. Actions

If the engine experiences a loss of oil pressure and shuts down, take the following actions:

Step	Action
1	Coxswain notify and direct the crew to investigate the casualty and report status, cause and, if applicable, estimated time to repair.
2	Coxswain secure the engine if this has not already occurred.
3	Crewmembers should: Check the outboard engine area for oil. Verify oil level on dipstick. Check that spin-on oil filter is tightly installed. Check oil drain fitting for security. Report all findings to the Coxswain.
4	Coxswain report status of casualty to the Operational Commander.

This page intentionally left blank.

Section F. Engine High Water Temperature

F.1. Symptom(s)

Loss of engine power when throttle is increased.

Horn alarm with a fault message on the engine gauge.

NOTE

When the fault occurs, the engine speed is reduced. If the condition persists, the engine shuts down.

Steam escapes from engine cover.

F.2. Actions

If the engine experiences high water temperature, take the following actions:

Step	Action
1	Coxswain notify and direct the crew to investigate the casualty and report status, cause and, if applicable, estimated time to repair.
2	Coxswain bring engine to idle and stop the engine.
3	Crewmembers should: Check engine cover with the back of the hand to ascertain any abnormal temperature. Check around engine cover for evidence of steam. If possible, tilt engine forward and check cooling water intake screen for obstructions. Report all findings to the Coxswain.
4	Coxswain report status of casualty to the Operational Commander.

This page intentionally left blank.

Section G. Damage to Collar

G.1. Symptom(s)

Obvious rips and tears to collar.

G.2. Actions

If damage to the collar occurs, take the following actions:

Step	Action
1	Coxswain notify and direct the crew to investigate the casualty and report status, cause and, if applicable, estimated time to repair.
2	Crewmembers should: Check the physical condition of the collar. Report all findings to the Coxswain.
3	Coxswain report status of casualty, disabling or restrictive, to the Operational Commander. Return home as directed by extent of casualty and direction of Operational Commander.

This page intentionally left blank.

Section H. No Power/Insufficient Power to Communications/Navigation Equipment

H.1. Symptom(s)

VHF-FM, radar, GPS, or DGPS system(s) fail to operate properly.

H.2. Actions

If there is no power to operate the communications/navigation equipment, take the following actions:

Step	Action
1	Coxswain notify and direct the crew to investigate the casualty and report status, cause and, if applicable, estimated time to repair.
2	Verify alternator output on gauge for each engine.
3	Check the position on power panels of all breakers and switches for the affected equipment.
4	Crewmembers report all findings to the Coxswain.
5	If able, Coxswain report status of casualty to the Operational Commander.

This page intentionally left blank.

Appendix A. Outfit List and Stowage Plan

Introduction

This appendix contains the standard stowage plan for SPC-LE outfitting. No deviation from this list is authorized, except in the event that the addition of portable equipment, not part of the standard boat outfit, is necessary to meet mission needs, units are authorized to temporarily carry this extra equipment on a per sortie basis.

SPC-LE Management Information, Configuration, and Allowances (MICA) provides national stock numbers (NSNs) and ordering information for all outfit list items.

WARNING

Any time the boat is started or is underway, the Coxswain MUST have the lanyard of the engine kill switch clipped to his/her survival vest or PFD. A second kill switch activation clip and lanyard MUST be carried onboard to enable remaining crewmembers to operate the boat in the event the Coxswain is ejected.

In this appendix

This appendix contains the following information:

Topic	See Page
SPC-LE Outfit List and Stowage Plan	A-2

SPC-LE OUTFIT LIST AND STOWAGE PLAN

FOREPEAK	QUANTITY
10 LBS FORTRESS ANCHOR W/ CHAIN	**1**
150 FT of $^{5}/_{8}$ inch ANCHOR LINE	**1**
$1^{1}/_{4}$ inch DE-ANCHORING SHACKLE	**1**
FENDER	**1**
30 FT MOORING LINES	**3**
FORWARD COMPARTMENT	
RESCUE HEAVING LINE	**1**
FIRE EXTINGUISHER	**1**
NAV KIT CONTAINING:	**1**
AIR HORN, FLASHLIGHT, NOTE PAD, 3 PENCILS, STOP WATCH,	**(incl)**
GREASE PENCIL, SEARCH PATTERN SLIDE RULE, NAUTICAL SLIDE	**(incl)**
RULE, PARALLEL RULER, WEEMS PLOTTER, ERASER, DIVIDERS	**(incl)**
CHARTS	**1 (set)**
SAR VEST REPACK (SALT PILLS / CO2 CARTRIDGES)	**1**
PYRO KIT (12 MK127 / 12 MK124 / 2 MK79) SEALED	**1**
MIGRANT JACKETS (FULL FLIGHT BAG)	**2**
MIGRANT BLANKETS (IN FLIGHT BAG)	**3**
MAIN CABIN	
MANUALS (GPS/RADAR, HF/UHF, OPERATORS MANUAL)	**1 (ea)**
CHARTPLOTTER INSTRUCTION SHEET	**1**
COMPASS (CURRENT DEVIATION TABLE)	**1**
FIRE EXTINGUISHER	**1**
BINOCULARS (BEHIND FORWARD SEATS)	**1**
KILL SWITCH (ONE ATTACHED / ONE IN NAV KIT)	**2**
TELESCOPIC BOAT HOOK	**1**
SAR VEST	**4**
TOW LIGHT MAST (AFT OVERHEAD)	**1**
MAIN CABIN (FORWARD PORT STOWAGE)	
PELICAN CASE – AMIO PPE CONTAINING:	**1**
(BOX GLOVES, ALCOHOL PADS, MASK, CPR MASK)	**(incl)**
TOILET PAPER	**1**
FIRST AID KIT	**1**

MAIN CABIN (AFT PORT STOWAGE)	
PORTABLE SPOT LIGHT	**1**
30 FT MOORING LINES	**3**
HEAVING LINE	**1**
TOW KIT	**1**
MANUAL BILGE PUMP	**1**
MAIN CABIN (AFT STBD STOWAGE)	
FENDERS	**2**
MAIN DECK	
EPIRB	**1**
300 FT TOW LINE	**1**
RESCUE HEAVING LINE (AFT DECK)	**1**
LIFE RING W/ FLOAT LIGHT	**1**
LEGENDS (USCG & 331253)	**1 (set)**
NATIONAL ENSIGN / CG ENSIGN	**1 (ea)**
STBD AFT DECK BOX	
FIRE EXTINGUISHER	**1**

This page intentionally left blank.

Appendix B. Engineering and Configuration Changes

Introduction

This appendix contains a list of authorized engineering changes (EC) and configuration changes (CC) for SPC-LEs. SPC-LEs are not traditionally supported, Engineering Changes are reviewed and approved by CG-731 and implemented by U.S. Customs and Border Protection-National Marine Center. A vented, hinged panel in the aft cabin bulkhead gives access to the generator (**Figure 3-61**).

NOTE

For a complete breakdown of the Engineering Change, see the *Naval Engineering Manual*, COMDTINST M9000.6 (series), *Chapter 41*.

In this appendix

This appendix contains the following information:

Topic	See Page
Engineering Changes (ECs)	B-2
Configuration Changes (CCs)	B-3

Engineering Changes (ECs)

EC Number	Subject	Date
EC-001	MAW Forward Tow Bitt Adapters	3/27/2007

Configuration Changes (CCs)

CC Number	Subject	Date

This page intentionally left blank.

Appendix C. Materiel Inspection Checklist

Introduction

This appendix is meant to be a systematic means to inspect the SPC-LE and to ensure the entire boat is prepared to meet mission demands.

This checklist may be locally reproduced.

In this appendix

This appendix contains the following information:

No.	Area	See Page
I	Hull	C-3
II	Deck	C-4
III	Bilge	C-6
IV	Aft Port and Starboard Storage Lockers	C-7
V	Outboard Engines and Steering Actuator	C-8
VI	Cabin (Interior)	C-10

Materiel Inspection Checklist

Boat Number: _____

Station: _____

Date: _____

References: *Special Purpose Craft-Law Enforcement (SPC-LE) Operator's Handbook*, COMDTINST M16114.40 (series).
Naval Engineering Manual, COMDTINST M9000.6 (series).
Coatings and Color Manual, COMDTINST M10360.3 (series).
Coast Guard Rescue and Survival Systems Manual, COMDTINST M10470.10 (series).

WARNING

> The engine kill switch lanyard and activation clip MUST be inspected daily. Damaged, deteriorated or frayed lanyards must be replaced prior to engine start. Engine kill switch operation must be tested weekly.

Inspection Standards: The following inspection standards apply to SPC-LE hull, machinery, equipment, outfit, and all installed systems and accessories:

Operates smoothly and correctly.
Free of grease, oil, rust, and corrosion.
All fluid levels and pressure readings are within tolerances.
Protective coatings applied correctly and neatly.
Free of rips, tears, abrasions, and cracks.
Outfit and equipment correctly installed, adjusted, and stowed to specifications and design (see *Appendix A*).
Labels, test dates, and placards properly displayed.
Free of non-standard/unapproved installations or equipment.
Maintained according to current manufacturer's guidelines and Commandant Directives.

Inspection Guidelines: Inspections require a minimum of ***two*** experienced personnel, preferably one Boatswain's Mate and one Machinery Technician, who have a strong working knowledge of the contents of all references listed above. Each item on the checklist should be judged against applicable standards and references. Additional discrepancies, uninstalled engineering changes (ECs), etc. should be listed.

Inspected By: _____ **Date:** _____

Inspected By: _____ **Date:** _____

I. Hull

WARNING

Any time the boat is started or is underway, the Coxswain MUST have the lanyard of the engine kill switch clipped to his/her survival vest or PFD. A second engine kill switch activation clip and lanyard MUST be carried onboard to enable remaining crewmembers to operate the boat in the event the Coxswain is ejected.

ITEM	SAT	UNSAT	REMARKS
Hull (Visible Surfaces)			
Collar			
Transom			
Depth Sounder Transducer Wiring			
Tie-Downs			
Outboard Engines			
Steering Actuator			
Zinc Anodes			
Lettering/Numbering/Decals			
Waterline			
Self-Bailing One-Way Scuppers			
Navigation Lights (Red/Green)			

REMARKS:_____

II. Deck

ITEM	SAT	UNSAT	REMARKS
Radar Pod Fittings and Hinge			
Lifting Eyes and Tie-Downs			
Deck Covering (Non-Skid)			
Heater Exhaust at Seat			
Heater Intake			
Forward Tow Bitt			
Aft Tow Bitt			
Gun Mounts (if installed)			
Ammunition Locker Shelves			
Anchor Locker			
EPIRB			
VHF-FM Antennas			
Radar Pod			
Horn			
Radar Antenna			
Blue Strobe Lights			
Loudhailer Speaker			
Floodlights			
Anchor Light			
Towlight Mast			

ITEM	SAT	UNSAT	REMARKS
Searchlight			
Cabin (Exterior)			
Cabin Door			
Windshield			
Side Windows and Doors			
Windshield Wipers			
Cuddy Cabin Door			
Electric Cabin Dewatering Pump Overboard Discharge			
Battery Vent(s)			

REMARKS:_____

III. Bilge

ITEM	SAT	UNSAT	REMARKS

REMARKS:_____

IV. Aft Port and Starboard Storage Lockers

ITEM	SAT	UNSAT	REMARKS
12 VDC Bus Bar			
Fuel Tank Level Sensor			
Fuel Filters (Racor)			
Fuel Fill Cap			
Fuel Fill Line			
Fuel Vent(s)			
Lift Fixtures			
Scuppers			
Portable Fire Extinguisher			

REMARKS:_____

_____

_____

V. Outboard Engines and Steering Actuator

ITEM	SAT	UNSAT	REMARKS
Engine			
Engine Cover			
Oil Dipstick			
Oil Fill Cap			
Propeller			
Engine Attachment Points			
Cooling Water Flow Indicator			
Cooling Water Intakes			
Zinc Anodes			
Belts			
Hoses			
Wiring			
Control Cables and Linkage			
Steering Actuator			
Actuator Shaft (Exposed Area)			
Cylinder			
Attaching Hardware			
Tie Bar			

ITEM	SAT	UNSAT	REMARKS
Hydraulic Lines and Fittings			

REMARKS:_____

VI. Cabin (Interior)

ITEM	SAT	UNSAT	REMARKS
Crew Seats			
Battery Switches			
Batteries and Battery Box			
Ignition Panels (Start Keys, Engine Kill Switch Clips, and Lanyards)			
Communications/Navigation Equipment			
VHF-FM Radios			
Radar			
Depth Sounders			
Microphones			
Engine Throttle Control			
Steering Wheel			
Helm Pump			
Power Panels and Switches			
Heater/Air Conditioner Control			
Searchlight Control			
Engine Gauges and Warning Lights			
Long Arms Stowage			
Fans			
Interior Lights			

ITEM	SAT	UNSAT	REMARKS
Windshield Wipers and Washer Controls			
Sliding Windows and Latches			
Portable Fire Extinguisher			
Towlight Mast (If Stowed)			

REMARKS:_____

_____

_____

This page intentionally left blank.

Appendix D. Disabling Casualties

Introduction

This appendix contains disabling casualties for SPC-LEs. Refer to *Chapter 5.A* of this handbook for steps to follow if any of these casualties occur.

In this appendix

This appendix contains the following information:

Topic	See Page
Engine Parameters	D-2
Engineering System Components	D-2
Electronics/Navigation	D-2
Safety	D-3
General Material	D-3

Disabling Casualty List

Engine Parameters	Engine Lube Oil Pressure: Horn alarm sounds. Engine RPM is automatically reduced. A fault message appears on the engine gauge. Engine Cooling Water: Horn alarm sounds. Engine RPM is automatically reduced. A fault message appears on the engine gauge.
Engineering System Components	Engine fails to start. Uncontrollable overheating. Inoperable visual or audible alarms. Metallic/non-metallic noise: metal-on-metal/fuel-knock/bearing/clicking. Excessive engine vibration. Any fuel system leak. Engine oil level empty (no oil on the dipstick). Any engine wiring insulation damaged or chaffed resulting in an exposed conductor. Engine surging (over 50 RPM). Engine over speed (over 6400 RPM). Loss of engine control. Charging system faulty or inoperative. Continuous electrical breaker trip. Continuous failure of outboard engine fuses. Steering system inoperative. Engine mount hardware loose or missing. Loose/missing propeller coupling nut. Loose/disconnected engine control hardware. Loose/disconnected steering actuator hardware.
Electronics/ Navigation	No electronic means of signaling distress (i.e., no radio, EPIRB not installed or unserviceable, etc.). 12 VDC system will not energize.

Safety	Electrical arcing and sparking. Odor of insulation overheating. No portable fire extinguishers (unserviceable). No spare engine kill switch activation clip and lanyard available. Radar pod securing hardware loose/missing.
General Material	Hull/transom plate breach below the waterline. Crack in transom plate perimeter weld. Collar damage exceeding that described in the restrictive and major discrepancy lists (water intrusion is present).

This page intentionally left blank.

Appendix E. Restrictive and Major Discrepancies

Introduction

This appendix contains restrictive and major discrepancies for SPC-LEs. Refer to *Chapter 5* of this handbook for steps to follow if any of these casualties occur.

In this appendix

This appendix contains the following information:

Topic	See Page
Restrictive Discrepancies	E-2
Major Discrepancies	E-3

Restrictive Discrepancies

Engine and Boat Systems	Engine performance: Minimum RPM of 4200 for two minutes. Alarm sounds, fault message appears on gauge. Any leaks: Outboard cooling water components. Outboard engine lubrication system components. Steering actuator helm pump, hoses or fittings. Diesel fuel. Inoperable tilt/trim system. Inoperative fuel gauge.
Electronics/ Navigation	Navigation lights inoperative or displaying improper characteristics. Depth sounder inoperative. GPS inoperative. Radar inoperative. Magnetic compass affected as described below: Deviation table missing. Compass deviation greater than 5°. Electronics: One VHF-FM and transceiver inoperative. Both loudhailer and horn inoperative.
General Materiel and Safety	Watertight integrity: The engine well/void Freeman hatch does not seal. Holes/cracks in the hull/transom plate above the waterline. Any damage to collar exposing interior foam. The portable fire extinguisher missing or unserviceable. Navigation/anchor lights extinguished. Navigation/anchor lights with one or more extinguished. Missing non-skid section ($8^1/_2$ x 11 inches). Missing boat crew survival vest.

Major Discrepancies

Engine and Boat Systems	Loose/missing fittings, nuts, bolts, brackets, etc. Loose/missing hardware on the engines used for attaching accessories and sensors. Battery terminal connections loose or corroded. Engine control cables loose. Fluid levels below minimum required. Any engine wiring insulation damaged or chafed, not exposing the conductor. Damaged/inoperable door and window locks. Inoperable engine cover latch. Any standard boat machinery, with the exception of those listed on the disabling or restrictive list, not operating properly.
Boat Outfit	Life ring and/or distress lights (missing/unserviceable). Missing seat belts. Missing trailer screen. Missing mooring lines. Missing fenders. Missing/inoperable skiff hook. Missing/inoperable hand bilge pump. Missing/damaged lightening rod. Fire extinguisher PMS not recorded on equipment tag or improperly completed.
Electronics/ Navigation	Compass light inoperative. Expired deviation table. Any standard boat electronics, with the exception of those listed on the restrictive list, not operating properly.

General Materiel and Safety	Watertight integrity: Damage to hull or collar. Unrepaired damage to collar or bow cover. The engine well/void Freeman hatch gasket material is damaged or has loose/missing hardware. The cuddy cabin Bomar Hatch is inoperative or does not seal properly or has loose/missing/damaged hardware. Damage to folding radar pod. Missing/improperly outfitted first aid kit. Damage to folding radar pod. Missing/improperly outfitted first aid kit. Crack in transom plate to engine well weld. Crack in transom support gusset. Extinguished deck illumination light (interior or exterior). Any standard boat machinery or system, with the exception of those listed on the disabling or restrictive lists, not operating properly.

Appendix F. SPC-LE Power Trial

Introduction

This appendix contains the power trial for the SPC-LE to ensure that the boat operated to prescribed standards.

Pre-U/W Trial

Back the boat down into the water. Lower the outboards into the water and start-up; check overboard discharge. Check the operation of all the gauges and the throttle control; note results. Pull kill switches; outboards should shutdown. Place the kill switch(s) back on and place throttles into gear. Attempt to start while in gear. Engines should not start while in gear. Should any of these safety checks fail it is considered a **Disabling Casualty**. Restart the engines and energize all equipment and ensure the following: satisfactory radio checks, GPS lock on, depth finder operates, and radar transmits.

Power Trial

After all disabling casualties and restrictive discrepancies have been corrected or waived, the boat may get underway for a power trial.

Get the boat underway, trim engines all the way down, and bring it to a location where it can run for 2 minutes on a relatively straight course.

Bring the engines up to min 4200 RPM for a 2 minute period. Check the boat for any vibrations or unusual noises. Have the operator remove both hands from the helm and observe the boat's reaction. It should hold a relatively straight heading. Upon return trip to the station, check full power, noting engine speed and RPM. Engine should not exceed 6400 RPM. If the engines exceed 6400 RPM, it is considered a **Disabling Casualty.** Once back at the pier, check the engines, fuel system, and steering system for evidence of leaks. While U/W, compare electronic compass with GPS. If there is more than 5° difference between electronic compass and GPS, electronic compass deviation can be determined by steering on a fixed range and known course. While steering on known course, compare course with electronic compass. If deviation is greater than 5°, the electronic compass will need to be calibrated. After compass has been calibrated, complete a new test. If compass is unable to be calibrated to within 5°, it is considered a **Restrictive Discrepancy.**

This page intentionally left blank.

Appendix G. List of Acronyms

Introduction This appendix contains a list of acronyms used throughout the handbook.

In this appendix This appendix contains the following information:

Topic	See Page
List of Acronyms	G-2

ACRONYM	DEFINITION
AC	Alternating Current
ATF	Automatic Transmission Fluid
BCCS	Boat Crew Communication System
BCRB	Bow Collar Reinforcement Bracket
CASREP	Casualty Report
CO	Commanding Officer
COLREGS	Collision Regulations
DBN	Double-Braided Nylon
DC	Direct Current
DES	Digital Encryption Standard
DGPS	Differential Global Positioning System
DIW	Dead-in-the-Water
DO	Defense Operations
DSC	Digital Selective Calling
EC	Engineering Change
ECM	Engine Control Module
ELC	Engineering Logistics Center
ELT	Enforcement of Laws and Treaties
EMI	Electro-Magnetic Interference
EPIRB	Emergency Position Indicating Radio Beacon
GPH	Gallons Per Hour
GPS	Global Positioning System
HPA	Helm Pump Assembly
LED	Light Emitting Diode
MARPA	Mini Automatic Radar Plotting Aid
MAW	Mounted Automatic Weapon
MEP	Marine Environmental Protection
MICA	Management Information, Configuration, and Allowances
MIG	Metal Inert Gas
MOB	Man Overboard
MSO	Marine Safety Office
MSS	Marine Safety and Security

ACRONYM	DEFINITION
MSST	Marine Safety and Security Team
NM	Nautical Mile
NSN	National Stock Number
NVG	Night Vision Goggles
OHIP	Overhead Hinged Instrument Panel
OIC	Officer-in-Charge
PFD	Personal Flotation Device
PGM-FI	Programmed Fuel Injection
PMS	Preventive Maintenance System
PPE	Personal Protective Equipment
PSS	Port Safety and Security
RBS	Recreational Boating Safety
RFO	Ready for Operation
SAFE	Secured Around Flotation Equipped
SAR	Search and Rescue
SINS	Scalable Integrated Navigation System
SOP	Standard Operating Procedure
TIG	Tungsten Inert Gas
UHMW	Ultra High Molecular Weight
UV	Ultraviolet
VAC	Volts, Altenating Current
VDC	Volts, Direct Current
WAAS	Wide Area Augmentation System
XO	Executive Officer
XPO	Executive Petty Officer
XTE	Cross Track Error

This page intentionally left blank.

INDEX

A

accommodation ladder, 7-3
activation clip, D-3
Additional crewmembers, 4-7
alternator, 3-59, 7-21
anchor, 2-7, 2-28, 2-35, 3-31, 3-49, 3-51, 3-79, 6-15, E-2
anchor light, E-2
anodes, 3-24
Anti-ventilation plate, 3-4
authority and responsibility, 4-5

B

batteries, 2-16, 3-59, 3-61, 3-62
battery isolators, 3-62
battery switch, 3-39, 3-61, 3-79, 6-19
battery switches, 3-39, 3-61, 3-79, 6-19
beam, vi, 2-4, 5-8, 6-9, 6-11
bilge, 2-20, 3-27, E-3
bilge area, 3-27
bilge pump, 2-20, E-3
Boat Crew Members, v, 4-3, 4-7, 5-3
boat handling, 6-9
boat number, 2-30
boat outfit, 5-4, A-1
Boat Specifications, i, 2-4
bow, 2-3, 2-4, 2-7, 2-35, 3-27, 3-35, 3-77, 5-8, 6-8, 6-9, 6-10, 6-11, 6-12, 6-15, 7-6, 7-7, E-4
breaking seas, 2-5
bulkhead, 2-5, 2-7, 2-13, 2-15, 2-17, 2-18, 2-24, 2-26, 2-30, 3-27, 3-32, 3-34, 3-46, 3-65, 3-68, 3-73, 3-82, 3-85, B-1
buoyancy, 2-3, 3-27, 5-8, 7-5, 7-6

C

capsizing, vi, 7-2, 7-3
CASREP, 5-3, 5-6, G-2
changing course, 5-8
chart, 3-45, 3-49
chart plotter, 3-45, 3-49
circuit breakers, 3-64
cleats, 2-22
COMDTINST 1541.1, 4-12
COMDTINST 3500.3, 4-12
COMDTINST M10470.10, 2-30, 3-94, 4-11, 4-13, 6-5, C-2
COMDTINST M16114.32, 4-1, 4-3, 4-7, 6-5
COMDTINST M16114.33, 4-3, 4-7
COMDTINST M16114.5, 6-5, 6-7, 7-3
COMDTINST M5000.3, 4-5
COMDTINST M9000.6, C-2
Commanding Officer, 4-5, 4-12, G-2
communications, 2-3, 3-45, 3-56, 4-7, 6-1, 6-5, 6-7, 7-21
Communications/Navigation System, iii, 3-1, 3-45
compartments, i, 2-1, 2-7
compass, 3-52, 3-53, 3-55, E-2, F-1
configuration control, 1-5, 1-9
console, 2-5, 2-15, 3-19, 3-20, 3-39, 3-50, 3-51, 3-52, 3-55, 3-62, 3-64, 3-65, 3-66, 3-81, 3-82, 3-89, 3-92, 3-93, 5-10, 7-13
control handle, 3-16
converter, 3-47
Cooling System Indicator, ix, 3-12
Cooling water intake holes, 3-4
Coxswain, v, 3-16, 3-18, 4-1, 4-5, 4-7, 4-9, 4-12, 4-13, 5-4, 5-5, 5-9, 6-4, 6-5, 6-7, 6-11, 7-1, 7-9, 7-11, 7-13, 7-15, 7-17, 7-19, 7-21
Crew Capacity, 2-4
crew requirements, v, 4-1
crew seat, 2-16, 3-47, 3-59, 3-79
crewmember, 4-1, 6-1, 6-13
cruise speed, 2-5

D

dash panel, 3-47, 3-49, 3-52, 3-74, 3-75
deadrise, 3-27
deck, 2-3, 2-7, 2-15, 2-17, 2-18, 2-19, 2-21, 2-25, 2-26, 2-30, 2-35, 2-36, 3-13, 3-27, 3-29, 3-31, 3-32, 3-33, 3-34, 3-43, 3-44, 3-67, 3-68, 3-74, 3-82, 3-91, 3-94, 5-8, 6-5, 6-7, 6-17, 6-19, 7-5, 7-7, 7-9, 7-13, E-4
deck drain, 2-3, 3-31
deck drains, 2-3, 3-31
deck equipment, ii, 2-1, 2-21

defroster, 3-73
depth finder, F-1
depth sounder, 2-20, 3-54
depth sounder transducer, 2-20
design, i, 2-3, 2-4
DGPS, iv, 3-45, 3-50, 3-51, 3-52, 7-21, G-2
diode, 2-26
dipstick, 3-10, 3-11, 7-15, D-2
disabling casualties, 5-3
distribution panel, 3-45, 3-46, 3-47, 3-49, 3-50, 3-51, 3-53, 3-54, 3-58, 3-62, 3-70, 3-79, 3-81, 3-82, 3-89, 3-92, 3-94
draft, iii, 2-4, 3-27
drain, 2-7, 2-35, 3-10, 3-31, 3-32, 3-34, 7-15
dry chemical agent, 3-91

E

EC, B-1, B-2, G-2
effects of wind, 6-9, 6-12
egress, vii, 7-5, 7-6, 7-7, 7-8
electrical system, iv, 3-1, 3-59
electronic navigation system, 3-52
emergencies, 7-1
emergency position indicating radio beacon, v, 3-94, G-2
emergency procedures, vi, 7-1
engine, ii, iii, vi, vii, ix, x, xi, 2-20, 3-4, 3-5, 3-6, 3-7, 3-8, 3-9, 3-11, 3-12, 3-13, 3-14, 3-15, 3-16, 3-18, 3-19, 3-20, 3-21, 3-24, 3-33, 3-62, 3-66, 5-9, 5-10, 5-11, 6-4, 6-5, 7-2, 7-11, 7-13, 7-17, C-8, C-10, D-1, D-2, E-2, E-3, F-1, G-2
Engine High Water Temperature, vii, 7-2, 7-17
engine kill switch, 3-18, 6-3, 6-4, D-3
engine mount, 3-22
engine RPM, 3-14, 3-16, 3-19, 3-52, 3-59, 5-10, 7-11, 7-13
engine speed, 3-14, 3-16, 3-17, 3-19, 5-10, 5-11, F-1
engineering changes, i, 1-7, B-1, B-2
EPIRB, xi, 3-94, 3-95, A-3, C-4, D-2, G-2
Executive Petty Officer, 4-5, G-3
Exhaust, iii, x, 3-8, 3-24, 3-65, C-4
exhaust gases, 3-24

F

facility manager, i, 1-1, 1-5, 1-7
fender, 3-27
fender system, 3-27
fire extinguisher, 2-15, 2-19, 2-36, 3-68, 3-91, D-3, E-2
fire extinguishers, 3-68, 3-91, D-3
fittings, ii, 2-1, 2-21, C-4, C-9
floodlights, 3-52, 3-56, 3-82
following seas, 5-8
forward, 2-3, 2-5, 2-7, 2-11, 2-15, 2-16, 2-22, 2-26, 2-29, 2-35, 3-14, 3-16, 3-18, 3-29, 3-31, 3-32, 3-45, 3-46, 3-47, 3-56, 3-59, 3-67, 3-70, 3-71, 3-73, 3-77, 3-79, 3-82, 3-94, 6-4, 6-7, 6-8, 6-10, 7-5, 7-7, 7-17
foundation, 3-50, 3-67, 3-77
fuel, ii, iii, iv, v, vii, ix, x, xi, 2-4, 2-35, 3-1, 3-5, 3-6, 3-7, 3-8, 3-13, 3-25, 3-41, 3-42, 3-43, 3-44, 3-68, 3-69, 5-7, 5-11, 7-2, 7-6, 7-13, C-7, G-3
fuel consumption, 5-7
fuel Filter, iii, ix, x, 2-35, 3-43, C-7
fuel supply, 2-19
fuel system, 3-6, 3-41, D-2, F-1
fuel tank, 2-7, 3-13, 3-27, 3-41, 3-42, 3-44, 6-3, 7-13
fuel tank capacity, 2-4
fuses, iv, 3-6, 3-64

G

gearshift, 3-14, 3-15, 3-16, 3-18, 3-20
Going Alongside, vi, 6-1, 6-7
GPH, 3-43, 5-7, 5-11, G-2
GPS, 3-47, 3-50, 3-54, 3-62, 3-94, 5-9, 7-21, A-2, E-2, F-1, G-2
gun mount, 2-3, 2-22

H

handling, 3-35, 4-7, 5-8, 6-9, 6-12
handling characteristics, vi, 6-1, 6-9
heading, 3-53, 5-8, 6-7, 6-9, 6-10, 6-12, 6-17, F-1
heading sensor, iv, x, 3-45, 3-53, 3-54
height, 2-4
helicopter, 6-13
helmet, 4-12, 4-13
HF transceiver, 2-19, 2-36
horn, v, xi, 3-62, 3-82, 3-94, 7-15, 7-17, C-4, D-2

hull, i, iii, iv, ix, x, 2-3, 2-4, 2-5, 2-6, 3-1, 3-27, 3-29, 3-30, 3-81, C-1, C-3, D-3
hull system, iii, 3-1, 3-27
hydraulic steering, 3-39

I

ignition system, 3-13
in-line fuses, 3-64

K

key switch, 3-15, 3-18, 3-20, 3-21, 5-9
kill switch, 3-18, 5-9, F-1

L

lanyard, 3-18, 6-3, 6-4, D-3
launching, 3-14
LEDs, 2-26
Length, 2-4
length overall, 2-4
line reel, 3-56
loading, 3-26
lockers, 2-16, 2-19, 2-26, 2-30, 3-32, 3-42, 3-59
loudhailer, iii, x, 3-45, 3-46, C-4
lube oil pressure, vii, 7-2, 7-15, D-2
lubrication system, E-2

M

major discrepancies, 5-4
manufacturer, i, 2-3
mast, 3-56, 3-82, 3-85, 6-19
materiel inspection checklist, viii, C-1, C-2
MICA, A-1, G-2
minimum Crew, v, 4-1, 4-3
minor discrepancies, 5-4
Mission Performance, vi, 6-1
Missions, i, 2-4
MK 16, 3-77
monitoring equipment, 5-9
mooring, 3-14, 3-21, E-3
MSSTs, 2-4

N

navigation, 2-7, 2-29, 3-45, 3-49, 3-51, 3-53, 3-56, 3-82, 4-5, 4-7, 7-21
navigation lights, E-2
neutral, 3-14, 3-15, 3-16, 3-17, 3-18, 6-4
no power, 7-21
No Power/Insufficient Power to Communications/Navigation Equipment, 7-2, 7-21
non-skid, 2-3, 2-25, E-2

O

Officer-in-Charge, 4-5, G-3
oil dipstick, 3-7
operating instructions, 3-58
operating parameters, v, 5-1, 5-3
operating range, 5-7
Operating with Helicopters, vi, 6-1, 6-13
Operational Commander, 5-4, 5-5, 5-6, 6-7, 6-8, 7-1, 7-9, 7-11, 7-13, 7-15, 7-17, 7-19, 7-21
Operational Guidelines, v, 5-1
other crewmember, 4-1, 7-1
outboard engines, 2-19, 3-3, 3-14, 3-24, 3-41
Outboard Profile, ix, 2-8
outfit list, 1-1, A-1

P

padeye, 2-21
passengers, v, 4-1, 4-9
Performance Data, v, 5-1, 5-7
personal protective equipment, v, vi, 4-11, 6-5, G-3
PFD, 3-18, 7-5, G-3
PG-1000 heading sensor, 3-51, 3-53, 3-54
Physical Characteristics, i, 2-4
platform, 2-4, 3-58, 6-9, 6-13, 7-3
polyethylene, 2-3
power tilt switch, 3-20, 3-21, 3-23
PPE, 4-11, 6-4, A-2, G-3
pre-start checks, 6-3
Pre-U/W Trial, F-1
propeller, C-8
propulsion, 3-3, 3-41, 5-9
propulsion machinery, 2-4
propulsion System, ii, 3-1, 3-3
pump, 3-10, 3-12, 3-13, 3-25, 3-39, 7-9, E-2

Q

quartering the seas, 6-11

R

racor filter, 3-13
range, 2-5
rate of lateral closure, 6-7
reflective tape, 2-30
remote control, 3-81
Responsibilities, v, 5-3, 5-4
restrictive and major discrepancies, E-1
restrictive discrepancies, 5-3
reverse, 3-14, 6-4
ring buoy, 2-30
risk assessment, 3-52, 5-5, 6-7, 6-17
rub rails, 6-7, 6-17

S

safety, 1-5, 1-9, 2-21, 3-26, 3-73, 3-81, 4-5, 4-12, 6-5, 6-13, 6-17, 7-1, 7-3, F-1
safety chain, 2-21
Safety Equipment, v, 4-1, 4-11
scuppers, 3-31, 3-34
searchlight, 3-81
seas on the beam, 5-8
seat belt, 3-71, 4-12, E-3
seats, 2-4, 2-7, 2-15, 3-71, 3-94
Securing Procedures, vi, 6-1, 6-19
SINS, 3-45, G-3
speed, vi, 2-5, 3-51, 3-89, 5-8, 7-3
spotter, 2-7, 2-14, 3-47
stability, vi, 5-8
standardization, 1-5, 1-9, 5-4
starter, 3-6, 3-13
starting procedures, vi, 6-1, 6-3
station keeping, 6-12
steam, 7-17
steering actuator, 7-9, D-2
steering casualty, vii, 7-2, 7-9
steering system, D-2
steering wheel, 3-65, 3-66, 3-74
stern light, 3-82
stowage plan, A-1
surf, 2-5, 7-3
switches, 2-7, 3-20, 3-61, 3-70, 3-89, 6-19, 7-21

T

tacking, 5-8
Thermal Imaging System, iv, 3-58
throttle control, 3-5, 3-7, 3-14, 3-15, 3-18, 3-20, F-1
tie-downs, 2-7, 2-35
tilt lock lever, 3-23
top speed, 5-8
tow, 2-3, 2-22, 3-77, 3-85, 6-17, 6-19, 7-3
tow bitt, 2-22, 3-77
tow bitts, 2-22, 3-77
tow light, 3-85, 6-19
Towing, vi, 2-5, 3-82, 6-1, 6-17, 7-3
towing capacity, 2-5
trailer, 2-5, 2-21, 2-25, 5-11, E-3
transducer, 3-29, 3-54
transom, 2-24, 3-3, 3-24, 3-27, 3-32, 3-33, 3-47, 3-56, 3-67, 6-3, 7-9, D-3, E-2, E-4
turning, vi, 3-39, 6-9, 6-10
turning and pivoting, 6-9, 6-10

U

UHF, iii, x, 3-45, 3-46, 3-62, A-2
Underway, v, vi, 5-4, 5-5, 6-1, 6-5

V

VHF antenna, 6-19
VHF-FM, iii, x, 3-45, 3-46, 3-47, 3-48, 6-19, 7-21, C-4, C-10, E-2

W

WAAS, iv, 3-45, 3-50, 3-51, 3-52, G-3
washers, 2-11
water separator, 3-13, 3-43, 7-13
Waterline, C-3
watertight, 2-5, 2-20, 3-29, 6-4
winch, 2-21
wind, 5-8, 6-9, 6-10, 6-12
windows, 2-7, 2-11, 2-13, 2-14, 2-29, 3-73, 3-75, 6-7, 6-17, 7-5, 7-6, 7-7, 7-8
winds, 6-12, 7-3
wipers, 2-11, 3-52, 3-89