NON-STANDARD BOAT OPERATOR'S HANDBOOK

U.S. Department of Transportation

United States Coast Guard

COMDTINST M16114.28

U.S. Department of Transportation
United States Coast Guard

Commandant
United States Coast Guard

2100 Second Street S.W.
Washington, DC 20593-0001
Staff Symbol: G-OCS-2
Phone: (202) 267-6706

COMMANDANT INSTRUCTION M16114.28
Subj: NON-STANDARD BOAT OPERATOR'S HANDBOOK

1. PURPOSE. Provides requirements, guidelines, and information for boat crews to improve the safety and effectiveness of non standard boat operations.

2. ACTION. Units with non-standard boats shall ensure this Manual is available for all members associated with non-standard boat operations. Group offices should use this reference when planning and conducting ready for operation (RFO) visits. This Manual provides general information and does not supercede the recommendations and procedures as documented in the appropriate owner's manuals or manufacturer's technical publications for specific boats. Internet release authorized.

3. DIRECTIVES AFFECTED. None.

4. DISCUSSION. As non-standard boat (NSB) usage increases, the exposure to risk increases as well. Through improved training and risk management procedures we can improve the effectiveness of NSBs and minimize the probability of future mishaps. When operated within the appropriate conditions and in the manner in which it is designed, it is often the first resource to arrive on scene and can mitigate the severity of the incident to which it is responding. Additionally, appropriate use of the NSB can benefit the unit and Coast Guard through reduced maintenance, training and crewing requirements.

   a. Chapter 1 establishes a procedure for changes to this document and configuration control.

   b. Chapter 5 provides definitions and recommended actions for disabling casualties and restrictive discrepancies on non-standard boats.

   c. Appendices B, C, and D provide a recommended boat outfit list, daily check-off list and a sample preventive maintenance program.

DISTRIBUTION – SDL No. 139

	a	b	c	d	e	f	g	h	i	j	k	l	m	n	o	p	q	r	s	t	u	v	w	x	y	z
A	1	1	1		1	1	1		1	1		1	1	1	1	1	1		1		1					
B	10	8	5		2	1		2	2					10	1	2										
C	1	1			1			1	3		2			2				1					1			1
D	1	1		2				2																		
E														1												
F																										
G			1		1																					
H																										

NON-STANDARD DISTRIBUTION:

5. COMMENTS. Comments, corrections, recommendations and questions regarding this handbook should be forwarded to Commandant (G-OCS-2) in accordance with Section 1.C. and D.

RECORD OF CHANGES

CHANGE NUMBER	DATE OF CHANGE	DATE ENTERED	ENTERED BY

Table of Contents

CHAPTER 1. INTRODUCTION

SECTION A. WARNINGS, CAUTIONS, AND NOTES……... 1-3
A.1. General…….. 1-3
A.2. Warning…… 1-3
A.3. Caution…….. 1-3
A.4. Note…….. 1-3
SECTION B. FACILITY MANAGER…… 1-5
B.1. General…….. 1-5
SECTION C. CHANGES……. 1-7
C.1. General…….. 1-7
SECTION D. ACTION…… 1-9
D.1. General…….. 1-9
D.2. Configuration Control……... 1-9

CHAPTER 2. BOAT CHARACTERISTICS

SECTION A. FUNCTION OF THE NON-STANDARD BOAT…… 2-3
A.1. General…….. 2-3
SECTION B. BOAT IDENTIFICATION…… 2-5
B.1. General…….. 2-5
B.2. Design……... 2-6
B.3. Size…… 2-9
B.4. Power Plant……... 2-9
B.5. Speed……. 2-9
B.6. Classification…… 2-10
SECTION C. HULL CONFIGURATION……... 2-11
C.1. General…….. 2-11
C.2. Definitions…… 2-11
C.3. Shallow V...……... 2-12
C.4. Deep V…….. 2-12
SECTION D. BOAT OUTFIT AND EQUIPMENT STOWAGE……... 2-13
D.1. General…….. 2-13
D.2. Stowage…… 2-13
D.3. Outfit……. 2-13

CHAPTER 3. BOAT SYSTEMS

SECTION A. PROPULSION SYSTEMS…… 3-3
A.1. General…….. 3-3
A.2. Twin Outboard…….. 3-4
A.3. Single Outboard…… 3-4
A.4. Diesel 3-4
Inboard/Outboard……..
A.5. Jet drive……. 3-5
SECTION B. STEERING SYSTEMS……. 3-7
B.1. General…….. 3-7
B.2. Mechanical…… 3-7
B.3. Hydraulic…….. 3-7
SECTION C. COMMUNICATIONS SYSTEMS……... 3-9
C.1. General…….. 3-9
C.2. Internal Communications…….. 3-9

CHAPTER 4. CREW

SECTION A. MINIMUM CREW…… 4-3
A.1. General…….. 4-3
SECTION B. COXSWAIN…….. 4-5
B.1. General…….. 4-5
B.2. Authority……... 4-5
B.3. Relief of Responsibility…… 4-5
B.4. Operating in Heavy Weather…… 4-6
B.5. Operating in Surf……. 4-6
B.6. Operating in Open Water…….. 4-6
SECTION C. CREW MEMBERS……... 4-7
C.1. General…….. 4-7
SECTION D. PASSENGERS AND SURVIVORS……. 4-9
D.1 General……... 4-9
SECTION E. TRAINING…… 4-11
E.1. General…….. 4-11
E.2. Standards for Qualification……... 4-11
SECTION F. SAFETY EQUIPMENT……. 4-13
F.1. General…….. 4-13
F.2. Helmets…….. 4-13
F.3. Eye Protection……... 4-13
F.4. Hypothermia Protection…… 4-13

CHAPTER 5. OPERATIONAL GUIDELINES

SECTION A. OPERATING PARAMETERS..... 5-3
A.1. General..... 5-3
A.2. Speed..... 5-3
A.3. Maximum Operating Limitations..... 5-3
SECTION B. LIMITING AND DISABLING CASUALTIES..... 5-5
B.1. General..... 5-5
B.2. Disabling Casualties..... 5-6
B.3. Restrictive Discrepancies..... 5-7
B.4. Major Discrepancies..... 5-8

CHAPTER 6. MISSION PERFORMANCE

SECTION A. PREPARING FOR SEA..... 6-3
A.1. Check Off List..... 6-3
A.2. Pre-Start..... 6-3
A.3. Pre Underway Brief..... 6-4
SECTION B. BOAT OPERATIONS..... 6-5
B.1. Pacing..... 6-6
B.2. Trimming..... 6-9
B.3. Open Water Boat Handling..... 6-13
B.4. Personnel Recovery..... 6-16
B.5. Towing..... 6-21
B.6. Anchoring..... 6-22
SECTION C. LAUNCH AND RECOVERY..... 6-23
C.1. Trailering..... 6-24
C.2. Launching..... 6-31
C.3. Recovery..... 6-33
C.4. Underway (shipboard)..... 6-34
SECTION D. SPECIAL OPERATIONS..... 6-35
D.1. Surf operations..... 6-36
D.2. Helicopter Operations..... 6-39

CHAPTER 7. PREVENTIVE MAINTENANCE

SECTION A. PREVENTIVE MAINTENANCE..... 7-3
A.1. General..... 7-3

APPENDIX A. GLOSSARY OF TERMS

APPENDIX B. DAILY CHECK OFF LIST

APPENDIX C. BOAT OUTFIT

APPENDIX D. PREVENTIVE MAINTENANCE SYSTEM

APPENDIX E. VEHICLE – TRAILER MATCHING CHECKLIST

APPENDIX F. UNIT TYPE SPECIFIC FORM

Chapter 1 Introduction

Overview

Introduction

This handbook contains generic information necessary for the safe and efficient operation of non-standard boats. It defines operational capabilities, limitations, and emergency procedures. Due to the wide variety of non-standard boats in the Coast Guard inventory, this manual is generic in nature.

In this chapter

This chapter contains the following sections:

Section	Topic	See Page
A	Warnings, Cautions, and Notes	1-3
B	Facility Manager	1-5
C	Changes	1-7
D	Action	1-9

Section A. Warnings, Cautions, And Notes

A.1. General The following definitions apply to Warnings, Cautions, and Notes found throughout the handbook.

WARNING

Operating procedures or techniques that must be carefully followed to avoid personal injury or loss of life.

CAUTION!

Operating procedures or techniques that must be carefully followed to avoid equipment damage.

NOTE

An operating procedure or technique essential to emphasize.

Section B. Facility Management

B.1. General

Commandant (G-OCS), Office of Boat Forces is the overall program manager for all boats under 65 feet in length. The District and Area Boat Managers/Boat Maintenance Managers manage the acquisition, maintenance, training, and repair of all non-standard boats in their respective districts and Areas.

Commandant (G-OPD) Office of Defense Operations is the overall program manager for Transportable Port Security Boats attached to Ports Security Units (PSUs) and at the PSU Training Detachment (PSU TRADET).

Section C. Changes

C.1. General

Commandant (G-OCS) promulgates this Manual and its changes. Submit recommendations for corrections or changes to (G-OCS) via the District Boat Manager. The following address applies to Commandant (G-OCS):

Commandant (G-OCS)
NSB Operator Handbook
2100 Second Street SW
Washington, D.C. 20593

Section D. Action

D.1. General

Operating and supervisory commands and boat crews shall utilize this manual as a tool to safely operate, transport and maintain non-standard boats.

D.2. Configuration control

Configuration control for shore-based non-standard boats is the responsibility of District Commanders.

Configuration control for cutter boats, with the exception of the Motor Surf Boat, is managed by Commandant (G-OCS).

Configuration control for Motor Surf Boats is managed by Commandant (G-OCU)

No changes will be made unless specifically authorized by those offices.

Chapter 2 Boat Characteristics

Overview

Introduction This chapter discusses the various non-standard boat types and features.

NOTE

All illustrations in this operator's handbook are for familiarization only. The location of machinery and equipment in these illustrations may not accurately reflect placement and installation for each NSB in the Coast Guard inventory. Refer to the appropriate blueprint, technical publication or enclosure to this handbook for

In this chapter This chapter contains the following sections:

Section	Topic	See Page
A	Function of the Non-Standard Boat	2-3
B	Boat Identification	2-5
C	Hull Configuration	2-11
D	Boat Outfit and Equipment Stowage	2-13

Section A. Function of the Non-Standard Boat

A.1. General

Non-standard boats are typically highly maneuverable, light weight resources that can provide the following capabilities:

- Greater speed
- Shallow draft
- Decreased crew requirements
- Other operational capabilities

Traditionally, the role of the NSB has been to fill a capability that could not be performed by a Standard boat.

NSB use can result in reduced crew requirement, decreased maintenance time, lower operational costs, and enhanced readiness if counted as the second Bravo-0 resource. In general, non-standard boats are intended to supplement a unit's capabilities and act as a force multiplier when assigned to a unit with a Standard boat

Cutter boats that are not fully mission capable significantly affect mission effectiveness of the cutters to which they are assigned.

NOTE

Non-standard boats should not routinely perform missions in an environment more appropriate for standard boats.

Section B. Boat Identification

B.1. General

The first step in safely operating a non-standard boat is identifying the vessel's design, size, speed, and power to weight ratio, capabilities, and outfit of the platform. Due to the diversity of the non-standard fleet, we have simplified the identification process.

In this section

This section contains the following information:

Topic	See Page
Design	2-6
Size	2-9
Power Plant	2-9
Speed	2-9
Classification	2-10

B.2. Design

Non-standard boats can be compared by design or construction materials.

B.2.a. Hard sided boats

Boats that are not fully fendered, but rely on traditional hard sided hulls, typically constructed of fiberglass or aluminum. Some examples of these boat types are:

- Boston Whaler
- Sea Ark

Figure 2-1
24' Boston Whaler

B.2.b. Collared or fully fendered boat

Boats that are fendered or maintain a collar along the gunnel. These collars can be foam, or even a hybrid of air and foam. Some examples of these boats include:

- Ambar
- Avon
- Secure All Around Flotation (SAFE) Boat
- Zodiac

Figure 2-2
23' SAFE Boat

B.2.c. Deck layout or structure

There are many different deck configurations that can be built to a boat's hull. Some of the more common types are:

- T-top
- Center console
- Full cabin

Figure 2-3
23' SAFE Boat with T-top

Figure 2-4
21' Zodiac with center console

Figure 2-5
25' SAFE Boat with full cabin

B.3. Size

Non-standard boats will be assigned a Coast Guard identification number (typically displayed on both sides of the bow), with the first two numbers indicating length. (Example, CG 235584 is a 23-footer). Size also relates to a non-standard boat's cargo capacity. The total crew, passenger, outfit, and cargo shall not exceed the manufacturer's recommendations found on the boat capacity plate. It is important to determine whether the NSB is appropriate for the weather conditions and tasks, based on size, before it is sortied for a mission. Weather and environmental limits for NSBs are promulgated by District Commanders, typically in the District SOP.

B.4. Power plant

Power plants or propulsion systems on non-standard boats are another way to compare similarities or differences. Typical power plant configurations include:

- Outboards (single or twin)
- Inboard/outboard (I/O)
- Inboard
- Water Jet
- Gas/diesel

B.5. Speed

A significant factor in the operation and versatility of non-standard boats is their speed. Though increased speed can enhance mission efficiency making a non-standard boat an inviting choice, that same speed advantage brings inherent increased risks.

NOTE

Existing non-standard boats maybe identified using the following system

B.6. Classification

For training, risk management, and other operational decision making reasons, the following system may be used to classify non-standard boats.

Classification stickers or placards should be affixed on the console near the helm.

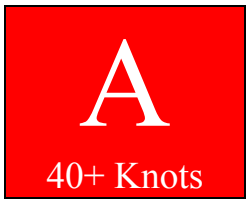

Boats with a speed capability that exceeds 40 knots would display this red sticker.

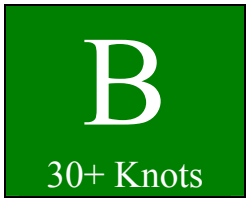

Boats with a speed capability that exceeds 30 knots would display this green sticker.

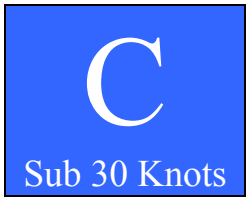

Boats with a speed capability up to 30 knots would display this blue sticker.

Section C. Hull Configuration

C.1. General

The majority of non-standard boats in the Coast Guard fleet are designed with a planing hull. That means maximum efficiency (fuel consumption, speed, and ride) is achieved by operating at sufficient speed so that minimum hull to water contact is made.

A variety of planing hull configurations can be found in the field. We will discuss two configurations suited for inshore (protected waters), and the offshore (coastal) environment.

NOTE

Several of the following terms are defined in Boat Crew Seamanship Manual, COMDTINST M16114.5(series)

C.2. Definitions

Term	Definition
Chine	The intersection of the bottom and the sides of a flat bottom or V-hull boat.
Chine walking	A side-to-side rocking motion achieved at higher speeds. Usually a result of excessive lift. This can be a result of poor hull design or more likely caused by over trimming of the engines.
Deadrise	Vertical degree of angle between a vessel's keel to its chine.
Forefoot	The part of the keel that curves up to meet the stem, or where the stem joins the keel of a ship or boat. (Similar to the entry. that part of a boat's hull from amidships forward).
Keel	Central longitudinal beam or timber of a ship from which the frames and hull plating rise.
Lift	The physical reaction of a vessel yielding to upward pressure caused by water or air

Definitions (cont.)

Longitudinal Center of Gravity (LCG)	The location of the center of gravity measured on the middle longitudinal center plane.
Planing Hull	A boat design that allows the vessel to ride with the majority of its hull out of the water once its cruising speed is reached.
On Plane/step	When a planing hull has achieved its cruising speed.
Strake	External longitudinal designed to create lift and to prevent chine walking.

C.3. Shallow V

Shallow V describes boats with a lesser deadrise. A good example is the Trailerable Aids to Navigation Boat (TANB). This boat has a deadrise at the stern of approximately 16 degrees. This minimal deadrise provides for a very shallow draft, is more stable at rest (on non-collared boats), and requires fewer horsepower to achieve planing speed. An excellent platform for operating in protected waters.

C.4. Deep V.

Deep V describes boats with a greater deadrise. For example: the Zodiac H733 or SAFE 23. These boats have a deadrise of 22 to 25 degrees. The increased deadrise combined with an extended forefoot provides a softer and drier ride enhancing the ability of the boat to negotiate offshore conditions.

Section D. Boat Outfit and Equipment Stowage

D.1. General

District Commanders are responsible for regulating outfit and stowage policies on their non-standard boats. Outfit requirements for each non-standard boat varies slightly based on deck layout, stowage capacity and mission focus for the unit's area of responsibility.

D.2. Stowage

Proper stowage can become critical (even life threatening) if a non-standard boat is involved in a mishap such as a capsizing.

General guidelines for stowage include:

- Secure for sea reducing chance of lost gear or entanglement
- Ready access to equipment during related evolutions
- Protection from the elements thus prolonging equipment service life and reliability.

D.3. Outfit

District (osr) should establish the minimum required equipment list for non-standard boats in their respective districts. A minimum recommended outfit for non-standard boats is provided in Appendix C to this manual. These may be considered necessary for all multi-mission work with this type of platform. Unit and operational commands should take a prudent but conservative approach in adding extra equipment to these boats that are typically short on storage space.

Chapter 3 Boat Systems

Overview

Introduction

This chapter discusses general boat systems found on non-standard boats. Though the specific layouts may vary boat to boat, this should assist in understanding some of the important features. Since non-standard boats often operate with minimal crews, it is important that each crewmember and coxswain become familiar with their boat's particular systems and operating characteristics. This is critical to mission performance, safety, troubleshooting, and casualty control.

In this chapter

This chapter contains the following sections:

Section	Topic	See Page
A	Propulsion Systems	3-3
B	Steering Systems	3-7
C	Communications Systems	3-9

Section A. Propulsion Systems

A.1. General

Non-standard boats can be equipped with a variety of propulsion systems. Boats equipped with outboards have the advantage of increased acceleration and speed over diesel power. You may find:

- Twin Outboards
- Single Outboard
- Inboard/Outboard (I/O)
- Diesel or Gas Water Jet
- 2-Stroke and 4-Stroke Outboards
- Inboard

This section contains the following information:

Topic	See Page
Twin Outboard	3-4
Single Outboard	3-4
Diesel	3-4
Jet Drive	3-5

A.2. Twin outboard

By far the most popular propulsion configuration, twin outboards provide sufficient acceleration to achieve planing speed rapidly. Maneuverability is increased due to ability to split throttles at low rpm and when equipped with counter-rotating propellers, the steering torque usually encountered with outboard powered boats is greatly reduced.

If an engine casualty occurs, you still have the ability to complete the mission or return to station using the remaining engine.

A.3. Single outboard

Although maneuverability and acceleration of a single outboard boat are not as significant as its twin powered counterpart, there are several advantages:

- Increased range over twin power plant
- Decreased maintenance costs
- More simple steering configuration
- Less stress on hull structure

Increased speed can be achieved when outfitting with a single outboard of comparable overall horsepower as a boat with twin outboard configuration. This can be attributed to less drag and less weight.

A.4. Diesel

Maximum range for horsepower can be achieved using diesel-powered boats. Diesel engine life span is greater than outboards. Towing capability is increased due to the ability of diesel engines to operate under heavier load conditions. A significant advantage to diesel fuel is its higher flash point, making it desirable when operating from cutters.

A.5. Water Jet drive

There are very few jet-powered boats in the Coast Guard inventory. Some advantages and disadvantages to jet powered boats are:

Advantages	Disadvantages
• Capability of operation in areas where very shallow draft is required. • Drive machinery is located inside the boat with limited exposure of working parts that could be damaged during grounding. • Able to perform emergency stops at full power.	• Reduced low speed maneuverability. • Lower horsepower to weight ratio • Steeper training curve • Decreased range • Decreased trim capability (affects ability to operate at efficient trim) • Non-traditional handling characteristics

WARNING

Commands that put RPM Limits on the propulsion system must be aware that they are limiting the coxswain's ability to utilize the resource to its maximum capability. Through proper training and qualification, coxswains must have the command's trust in their judgment to operate in a mature and professional manner.

Section B. Steering Systems

B.1. General

There are two predominate types of steering systems found in the non-standard boat fleet. These are mechanical and hydraulic.

B.2. Mechanical

The following are advantages and disadvantages of a mechanical steering system:

Advantages	Disadvantages
• Simple • Inexpensive • Easy to maintain	• Increased steering torque • Cable corrosion/failure • Not suited for twin outboard applications

B.3. Hydraulic

The following are advantages and disadvantages of a hydraulic steering system:

Advantages	Disadvantages
• Decreased steering torque • Can accommodate tilt helm • Superior effectiveness with twin outboard configurations • Superior cold weather functionality	• Increased maintenance costs

Section C. Communications Systems

C.1. General

Most non-standard boats are equipped with VHF/FM radios for ship-to-shore and ship-to-ship communications. Some may even be equipped with an inter-crew communications system but these are rare.

Due to the numerous layouts of the non-standard platforms you will find communicating when underway ranges from easy to very difficult. The crew should have first hand knowledge of their platform, and understand the challenges to communicating while underway. Engine noise and wind (whether natural or as a result of boat speed) can make crew communications difficult. Radio communications may be distorted or unreadable.

NOTE

Frequent operations and position reports between the non-standard boat and its OPCON are critical to crew safety and timely mishap follow-up. Every NSB must have the capability for communicating by radio to the station and other vessels. For radio protocol, channel selection, and additional radio communication information, refer to Chapter 11 of the Boat Crew Seamanship Manual, the Telecommunication Manual COMDTINST M2000.3 (series), and the Radiotelephone HandBook COMDTINST M2300.7 (series).

C.2. Internal communications

While underway every maneuver should be verbalized to ensure each member of the crew is aware of what the vessel is about to do. Discuss the terms that are going to be used, such as: Coming up (throttling up), coming down (coming off plane), hard to port, hard to starboard, etc. A common strategy is to have the receiver repeat back the message that was sent. Whether passing information to the crew or the parent unit, due consideration must be given that the message is received and understood. It is sometimes necessary to slow down or stop, in order to overcome the shortfalls of the communications systems on non-standard boats.

Chapter 4 Crew

Overview

Introduction

The Boat Crew Training Manual, COMDTINST M16114.9 (series), provides minimum standards and guidelines for competence on board non-standard boats. Each crewmember should be familiar with the duties of the other crewmembers in addition to there own duties. It is important for a crewmember to know and commit to memory all-important characteristics of the boat and its equipment, and which procedures to follow in the event of a casualty. Each crewmember should mentally rehearse the procedures to follow during any operational casualty, including the actions expected of other crewmembers. Teamwork is the common thread that allows the crew to safely succeed. Whenever the opportunity is available, the crew should get the boat underway to practice operational and emergency procedures.

In this chapter

This chapter contains the following sections:

Section	Topic	See Page
A	Minimum Crew	4-3
B	Coxswain	4-5
C	Crewmembers	4-7
D	Passengers and Survivors	4-9
E	Training	4-11
F	Safety Equipment	4-13

Section A. Minimum Crew

A.1. General

The minimum number of qualified crewmembers for most non-standard boats is two. Additional crewmembers may be required during special operations. Where local staffing permits, additional crewmembers should first ride in a training capacity to increase their proficiency with the boat's equipment and operation.

NOTE

Minimum Boat Crew Size for Coast Guard Boats COMDTINST 16233.1 (series) lists the minimum crew sizes for non-standard boats.

WARNING

Additional crew, boarding team members, passengers or guests must have adequate seating or sufficient handholds if standing.

Section B. Coxswain

B.1. General

The Coast Guard places great trust in a coxswain's ability to accomplish the assigned missions in a safe and professional manner even under adverse conditions. This is in no way diminished when operating non-standard boats. Due to the extreme dynamic nature of these vessels, the coxswain must be constantly attuned to the safety and comfort of the crew.

B.2. Authority

The extent of the authority and responsibility of the coxswain is specified in USCG Regulations, COMDTINST M5000.3, as follows:

> *"The coxswain shall be responsible, in order of precedence, for the safety and conduct of passengers and crew; the safe operation and navigation of the boat assigned; and the completion of the sortie or mission(s) assigned or undertaken pursuant to USCG policy and regulations. An underway coxswain will at all times respond, within the limits of capabilities and legal authority to observed hazards to life or property, and violations of law or regulations."*

The coxswain is the direct representative of the Commanding Officer or Officer-in -Charge and as such, (subject to Articles 88-89 of the UCMJ) has the authority and responsibilities that are independent of rank or seniority in relation to other personnel embarked. The authority and responsibility of the coxswain exist only when the boat is engaged on a specific sortie or mission.

B.3. Relief of responsibility

The only person embarked in the boat who may relieve the coxswain of the responsibility as described above is:

a) The Coxswain's Commanding Officer, Officer-in-Charge, Executive Officer, or Executive Petty Officer.

b) A senior officer at the scene of a distress emergency, or other abnormal situation who exercises authority under the provisions of USCG Regulations, whether or not other units are involved.

B.4. Operating in heavy weather

Operating in heavy weather without an experienced coxswain can seriously jeopardize the safety of the boat, its crew and the mission. The coxswain must consider many factors when operating in heavy weather. These factors include case severity, experience of the crew, water and air temperature, and weather forecast outlook. Even when forecast weather or on scene weather conditions do not meet the definition of heavy weather, non-standard boat coxswains must remain alert.

NOTE

During all risk assessment decision making processes; crewmembers, coxswains, unit commands and all elements exercising operational control over a boat shall consider individual boat capability, crew assignments, and the nature of distress when assigning response units *when heavy weather* conditions exist or are likely to be encountered.

NOTE

Heavy Weather is determined to exist for non-standard boats when the National Weather Service has issued a small craft warning. A small craft warning is defined as when sustained winds are in excess of 21 knots or seas are seven feet or greater.

B.5. Operating in surf

Non-standard boats are not authorized for operations in surf.

WARNING

Due to the lack of crew protection and inherent self-righting capability, non-standard boats are not authorized for operations in the surf.

B.6. Operating in open water (ocean or lakes)

Coxswains must be aware of the danger of sea breaks. Non-standard boats are not authorized for surf operations, but may encounter sea breaks during periods of heavy weather or thunderstorms.

WARNING

When operating in areas that present sea breaks, care must be given to avoid 'beam to' operations to minimize the risk of capsizing.

WARNING

The coxswain (or any person at the helm), shall wear the motor safety lanyard while underway under any conditions. All non-standard boats shall be equipped with a kill switch lanyard.

Section C. Crew Members

C.1. General

Under direct supervision of the coxswain, the crewmember is responsible for line handling, acting as a lookout or helmsman, and assisting the coxswain as required during all evolutions or maneuvers, and other duties as assigned by the appropriate authority.

C.1.a Engineering Responsibilities

Most non-standard boats do not require an additional engineer qualified crewmember as do standard boats. Although the coxswain is in charge and responsible, every NSB crewmember plays an important role as a part of the underway team. They must be actively involved in each mission or evolution including vocalization of observations or safety concerns. Each crewmember must have a thorough knowledge of the boat's outfit equipment and stowage. Each must also have a basic understanding of the propulsion and control systems in order to support the coxswain. Basic engineering casualty control and troubleshooting as it applies to the non-standard boat platform are skills and knowledge that must be integrated into the unit training program starting at the crew level.

NOTE

Crewmembers shall monitor the safety and security of all passengers onboard.

Section D. Passengers and Survivors

D.1. General

Since passengers and survivors may not have any vessel or equipment knowledge, it is important that they receive a basic safety brief prior to getting underway or soon after coming aboard. They should be provided with adequate safety or personal protective equipment based on the mission or situation.

NOTE

Passengers/guests should wear the same personal protective equipment as the boat crew. Pyrotechnics should only be worn by those who are trained to use them.

WARNING

As NSBs are typically fast and highly responsive to helm movements, coxswains should take great care when deciding whom to allow control of the helm. Weather conditions, proximity to other vessels, speed, and the person's experience, among other factors should be considered.

Section E. Training

E.1. General

Qualification, certification and assignment as a crewmember on any Coast Guard boat requires considerable time, effort, and practice. The individual must learn the characteristics of the boat and its missions, as well as the adverse conditions of the sea and the environment in which the boat operates. This is just as true for the non-standard boat platform as any other boat type. It is essential that the complete qualification process be used to certify non-standard boat coxswains and crew. Skills and knowledge must be demonstrated on each platform and they must be honed through experience and training at every opportunity.

E.2. Standards for qualification

The Boat Crew Qualification Guides listed below provide the minimum standards for qualification aboard NSBs.

- Boat Crew Qualification Guide Vol. I, Crew Member, COMDTINST M16114.10 (series)
- Boat Crew Qualification Guide Vol. II, Coxswain, COMDTINST M16114.11 (series)
- Boat Crew Qualification Guide Vol. III, Engineer, COMDTINST M16114.6 (series)

NOTE

All Coast Guard boat coxswain/crewman qualification is type specific. Qualification on a standard platform ***does not*** imply qualification on unit non-standard boats, nor does qualification on one NSB imply qualification on another NSB, unless identical.

Section F. Safety Equipment

F.1. General

During all non-standard boat operations, crewmembers shall wear personal protective equipment (PPE) as required by the Coast Guard Rescue and Survival Systems Manual, COMDTINST M10470.10 (series).

NOTE

The coxswain is responsible for ensuring that all personal safety equipment is worn, and worn correctly.

F.2. Helmets

Proper head protection is very important for crew and passengers while onboard non-standard boats. Drastic vessel movement can occur without warning due to the nature and speed of operation.

It is recommended that units evaluate the need for a unit level policy requiring that prior to accelerating to planing speed or conducting high-speed operations, the coxswain shall direct crewmembers to wear helmets. When not on a plane or operating at low speeds, helmets could then be removed at the discretion of the coxswain.

WARNING

Unless otherwise required by other directives, a risk-based decision should be undertaken by operational commanders to determine when helmets are worn. Helmets protect boat crew members during hazardous conditions such as heavy weather, surf, and helicopter operations.

F.3. Eye Protection

A risk-based decision should be undertaken by operational commanders to determine if eye protection should be worn. Eye protection with appropriate lenses protect eyes from glare, wind and spray. Rain or other particles in the air can cause eye injury during high-speed operations.

F.4. Hypothermia Protection

Wearing of proper hypothermia protection is necessary to ensure the safety and peak efficiency of NSB crews. NSB operations are usually short in duration. However, crews are often exposed to the elements for the majority of the mission. A rapid decrease in physical and mental response can occur even in fair weather due to the subtle effects of exposure. Since the operation of NSBs often involves high speeds or sharp maneuvers, it also requires constant attention and quick thinking on the part of the coxswain and crew. There is a much greater risk of actually going into the water during NSB operations (i.e. through capsizing, swamping, ejection, collision) than with standard boats. Consider the need for appropriate underclothing, waterproof footwear, gloves and dry suits. Commands and crews shall ensure adequate hypothermia protective equipment is provided to all boat crews and passengers in accordance with the Rescue and Survival Systems Manual, COMDTINST M10470.10 (Series)

Chapter 5 Operations

Overview

Introduction

Non-standard boats are designed to operate in conditions and environments in which standard boats are less suited. However, there may be occasions where the standard boat is the more desirable platform due to weather, distance, communications or other capabilities. If there is ever a doubt in the coxswain's mind over which platform to use, that alone may be sufficient reason to choose the standard boat over the non-standard boat.

In this chapter

This chapter contains the following sections:

Section	Topic	See Page
A	Operating Parameters	5-3
B	Disabling Casualties and Restrictive Discrepancies	5-5

Section A. Operating Parameters

A.1. General

Due to the diversity of the non-standard fleet, limitations will fluctuate greatly. *Check your District and unit SOP for specific limitations of your particular boats.*

A.2. Speed

Many of the non-standard boats in the field are capable of speeds that far exceed those of the standard platforms. This speed difference is a result of the need to achieve greater towing capability and carry larger personnel loads (boarding teams) on Standard boats, rather than obtain top end performance. The extreme speeds of NSBs are an asset to performing the mission only when used in a mature and professional manner. The experienced coxswain rarely operates at the maximum speed available. He or she knows that keeping some throttle in reserve will permit its use if evasive maneuvering is necessary.

Excessive speed can be attributed to a high number of small boat mishaps. Generally, coxswains will be the last person on board to tire as they can instinctively adjust their stance and body position to the conditions. Speed is hard on the body, and the equipment. The coxswain must maintain situational awareness; this includes the comfort and security of the crew. As a crewmember, never hesitate to ask the coxswain to SLOW DOWN or take up a more forgiving heading. There is no justification for navigating with a lack of consideration or fatiguing your crew enroute to a perceived distress.

Since the boat is operated at higher speeds, it is imperative that the coxswain anticipates upcoming events. Speed must be adjusted to current weather and sea conditions. Safe operating speed is an element of prudent seamanship.

WARNING

When operating a high-speed class A or B non-standard boat, the operator must be able to read and identify waves in order to prevent the NSB from launching or capsizing. Too much speed could cause the boat to fly off a swell/wave and cause crew ejection, injury, or damage to the boat.

A.3. Maximum operating limitations

Maximum operating limitations shall be established by the appropriate District Commander

WARNING

Non-standard boats are not authorized to operate in surf.

Section B. Disabling Casualties and Restrictive Discrepancies

B.1. General

The readiness of a non-standard boat shall be continuously monitored to insure that it is capable of unrestricted operations. This monitoring is accomplished through a variety of programs, including daily boat checks and the boat preventive maintenance system (PMS) schedule.

The following sections may be adopted by District Commanders as policy for operations in their District:

In this section

This section contains the following information:

Topic	See Page
Disabling Casualties	5-6
Restrictive Discrepancies	5-7
Major Discrepancies	5-8

B.2. Disabling casualties

Disabling casualties are those that make the boat unserviceable. If a disabling casualty is identified when a boat is moored, the boat should not get underway until the casualty is corrected.

NOTE

The Commanding Officer/Officer-in-Charge may authorize the movement of the boat (for short distances) under its own power to facilitate haul-out or corrective maintenance. In the event the boat sustains a disabling casualty while underway, the boat should immediately return to the nearest safe mooring, if able. In many cases the boat will require assistance from another vessel.

B.2.a. List of disabling casualties

The following is a list of disabling casualties for non-standard boats:

Engine and vessel systems

- Engine(s)metallic/non-metallic noises: abnormal metal on metal/knock/clicking.
- Engine(s) fail to start
- Engine(s) overheat (uncontrollable).
- Engine kill switch (motor safety lanyard) inoperable or missing.
- Engine controls (throttle and shift) inoperable.
- Engine(s) fail to shift into and out of gear (forward or reverse).
- Engine motor mounts loose or damaged or missing hardware (including tilt/trim or locking mechanisms.)
- Battery system won't charge.
- Steering system inoperable or restricted (binding or less than full movement).
- Any fuel leaks on gasoline engines.
- Any fuel or lube oil leaks on diesel engines dripping onto a hot surface (defined as a surface greater than 400 degrees, even if covered by insulation).

Electronics / Navigation

- No electronic means of signaling distress (i.e. no radio or EPIRB).

Boat Outfit

- Bilge pump fails to operate or clearing ports clogged or restricted.

Safety and General Materiel

- Any electrical arcing and sparking.
- Any hull breach below the waterline or structural damage that weakens the transom.
- Collar/Tube systems loose, incomplete, deflated, otherwise not secure or intact.
- No means of fire fighting (i.e. no portable fire extinguishers plus installed fire system inoperable)
- Backfire flame arrester inoperable or missing, if required.

.

B.3. Restrictive discrepancies

Restrictive discrepancies are those that restrict the operations of the boat such that it can perform some missions, but not all missions fully. For those non-standard boats being utilized as a primary unit asset or for B-0 response, restrictive discrepancies should be reported to the Operational Commander if the discrepancy cannot be repaired within one hour. The boat should be placed in Charlie status and should not get underway until the discrepancy is corrected, or a waiver has been granted. CASREP traffic should be used as appropriate to report key issues or seek required outside assistance.

Boats with restrictive discrepancies should be operated only if a written waiver has been issued by the Operational Commander. The Operational Commander is responsible for monitoring the progress of repairs to discrepancies for which waivers have been issued.

The waiver shall:

a) List the discrepancy.
b) Describe the conditions under which the boat may be operated
c) Comment on the measures to be taken tolessen or negate the hazard posed by the discrepancy.

A verbal waiver is authorized, as long as a written waiver follows it up within four hours.

B.3.a. List of restrictive discrepancies

The following is a list of restrictive discrepancies for non-standard boats:

Engine and vessel systems

- Engine(s) operating above normal range.
- Engine(s) fail to idle properly or stall frequently when engaged.
- Engine outdrive or outboard fails to fully trim/tilt.
- Engine(s) alarms inoperative (i.e. high water temperature, VRO).
- Emergency alarms inoperative (i.e. bilge).
- Installed fire system inoperable.
- Battery box (es) missing or not properly secured.
- Battery terminals not covered or protected against accidental contact with other objects.
- Any fuel or lube oil leaks on diesel engines dripping onto a surface that is not hot (defined as a surface greater than 400 degrees, even if covered by insulation).
- Any diesel fuel or Variable Ratio Oil (VRO) oil leak dripping* .
- Any jacket water, raw water, lube oil or hydraulic oil leaks more than 15 drops per minute.

Electronics / Navigation

- Compass missing or inoperable.
- Compass deviation over 5 degrees
- Fluxgate compass inaccurate over 5 degrees
- Radio inoperable.
- Radar inoperable, if so equipped (for night operation or less than one mile visibility).
- Fathometer inoperable.
- GPS inoperable.
- Navigation light(s) inoperative.

Boat Outfit

- Fire extinguisher(s) missing or inoperable
- Compass light inoperable (for nighttime operations).
- Spotlight missing or inoperable (for nighttime operations).
- SAR vest pyrotechnics or strobe lights unserviceable/missing.
- Primary towline less than 50% of required length or unserviceable.

Safety and General Materiel

- Damage to collar system requiring repair but not impairing the ability of the boat to perform some missions.

* To determine if a fuel or oil drip is occurring, a clean sheet of paper may be placed under the suspected leak to collect and detect any drops that fall in a ten-minute period.

NOTE

The amount of fuel carried or the current fuel state of a non-standard boat is not a disabling casualty or restrictive discrepancy as described above. It is, however, a critical mission issue since non-standard boats have a typically high fuel consumption rate and limited overall fuel capacity. Non-standard boats should be kept at 95% fuel capacity for peak readiness and not launched or diverted to a new mission when below 50% capacity. The coxswain must monitor fuel state at all times and should know exactly what the level is when beginning a mission. Risk management and mission planning should include a conservative fuel reserve (i.e. return to unit with a minimum of 25% fuel remaining).

B.4. Major discrepancies

Major discrepancies are those that degrade the effectiveness of the boat to perform one or more missions. The occurrence of major discrepancies should be documented. A plan to correct these discrepancies should be formulated and carried out. The Commanding Officer/Officer-in-Charge is responsible for monitoring the status of repairs to these discrepancies.

Chapter 6 Mission Performance

Overview

Introduction

The performance procedures in this chapter are intended for non-standard boats in the 15 to 29 foot range. For further information on any of the general procedures, review the Boat Crew Seamanship Manual, COMDTINST M16114.5 (series).

The actions and techniques described in this chapter are a product of field experience. Due to the wide variety of non-standard boats available in the field, there will be some variance as to how the procedures described here will be applied. As with standard boats, local operating conditions, district regulations, and the skill of the crew will determine the extent to which the full capability of the boat will be used.

In this chapter

This chapter contains sections.

Section	Topic	See Page
A	Preparing for Sea	6-3
B	Boat Operations	6-5
C	Launch and Recovery	6-23
D	Special Operations	6-35

Section A. Preparing for Sea

A.1. Check off lists

Inspection lists are critical for successful missions. It allows you to keep track of all the vital systems and tools on your non-standard boat. The list is separated into systems. This should make it easier to identify a problem or missing items. A sample check-off list is provided in Appendix B to this manual.

NOTE

Successful SAR case completion begins with diligent attention to morning check-off and inspections.

A.2. Pre-start

The following procedures (as applicable), should be followed before starting a cold engine, and should be repeated before each mission.

Step	Action
1	Inspect bilges for excessive amounts of water. Look for signs of spilled fuel or oils. Pump and clean as necessary
2	Sound fuel oil tank. Ensure fuel oil is maintained at 95% of capacity.
3	Check the following fluid levels: 1. Engine oil level filled to "FULL" mark. 2. Engine coolant sight glass filled to half mark of coolant recovery bottle or that coolant is at the appropriate level.
4	Check hydraulic steering system for leaks at helm and at steering ram aft by outboards. For cable steering systems check steering linkage connections and ensure free movement at helm.
5	Check sea strainers for cleanliness. Ensure sea strainer handle is selected to one side (for duplex strainers). Open sea suction valves.
6	Check all belts for proper tension.
7	Secure dockside electrical power and disconnect shore-tie from the boat. Secure all breakers in the 110-volt AC power panel.
8	Ensure the main breaker and the breakers on the 12-volt DC power panel are on.

A.2.a. Starting

The following procedures (as applicable), should be followed before starting a cold engine, and should be repeated before each mission.

Step	Action
1	Boat outfit onboard and secured including knife, sidelines, towing bridle, throw bag, spotlights, etc. Identify and correct changes or discrepancies that have occurred since the boat's last use or since the daily check-off was accomplished.
2	Inspect all tow bits and tow lines, no less than 90% of towline capacity.
3	Electronics, antennas, and speakers secured and operational.
4	Engine safety lanyard checked with one extra lanyard on board.
5	Outboards down prior to starting (ensure full tilt/trim travel on each engine).
6	Ensure throttles are in neutral.
7	Check outboards for nominal or adequate cooling water output.
8	Outboard cowling gasket checked for damage. Ensure that outboards are secure to the transom and all mounting hardware is tight.
9	Check crew and passengers for attire in appropriate PPE including helmets (if required).

A.3. Pre-underway brief

A pre-underway brief shall be conducted in accordance with the Boat Crew Seamanship Manual, COMDTINST M16114.5 (series), which includes a risk assessment of the potential hazards.

Section B. Boat Operations

Introduction

Guidance contained in the following sections may also be contained in the Boat Crew Seamanship Manual, COMDTINST M16114.5 (series), and other Coast Guard directives.

In this section

This section contains the following information:

Topic	See Page
Pacing	6-6
Trimming	6-9
Open Water Boat Handling	6-13
Personnel Recovery	6-16
Towing	6-21
Anchoring	6-22

Pacing

B.1. General

Pacing is the act of two vessels underway matching course and speed. This maneuver is performed prior to maneuvering alongside another vessel or in preparation for Helo-ops.

NOTE

The fundamental skills of maneuvering alongside and coming alongside another vessel are discussed in the Boat Crew Seamanship Manual, COMDTINST M16114.5 (series) .

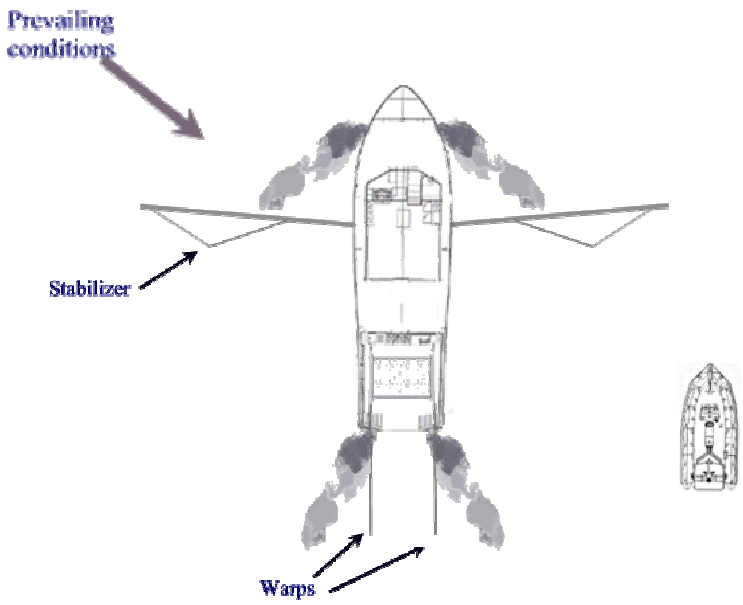

Figure 6-1
Pacing

B.1.a. Approach

Prior to making an approach in preparation to offload or recover personnel or equipment, the coxswain should make the following preparations:

- Assess how your boat is loaded and the impact it can have on your maneuverability.
- Make sure everyone on board is briefed on whom will debark first, second, etc.
- Has the master been briefed on your intentions?
- Determine the best side to approach based on prevailing weather/sea conditions (leeward side when possible).
- Are there obstructions that will limit the maneuvering space?
- Plan your escape route.

B.1.b. Coming alongside

Once you have determined the point where you will come alongside, begin to close. If conditions permit, match your speed to the other vessel then close from the side staying between the bow and stern wakes.

Make contact with the forward section of your boat. Use helm and power (if not on a sea painter) to hold your bow into the other vessel.

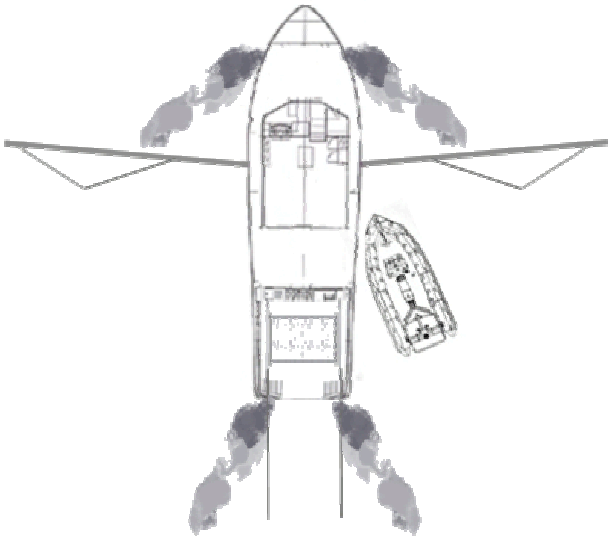

Figure 6-2
Coming Alongside

WARNING

Embarking and disembarking passengers, crew, or boarding personnel shall be on the coxswain's command only. Pre-brief all personnel prior to executing this evolution.

B.1.c. Clearing the side.

Sheer the stern in to get the bow out. Allow the bow to catch the bow wake slightly. This will allow water to be forced between the boat hulls. Apply gradual power to gain a slight relative speed and maneuver towards the two o'clock position of the stand-on vessel.

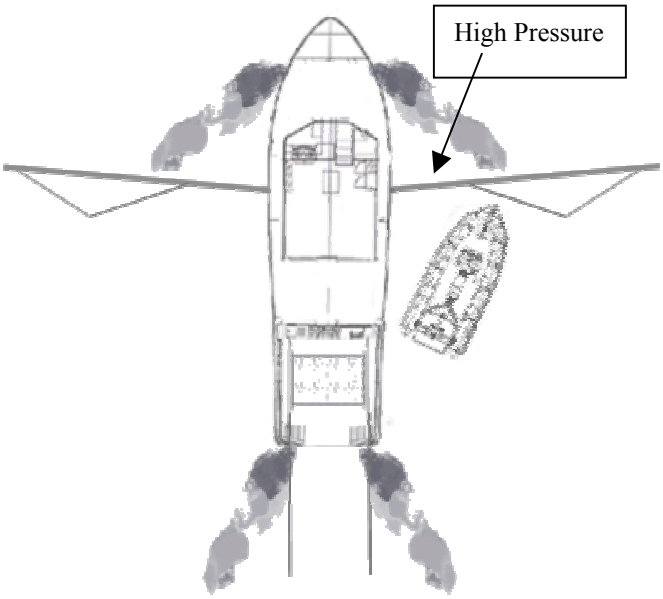

Figure 6-3
Clearing the Side

WARNING

The coxswain must not attempt to drive through the bow wake of the stand-on vessel. The extreme flow of water around the bow can cause the NSB to be sucked under the stand-on vessel's bow.

WARNING

Never cross the bow of the stand-on vessel.

Trimming

B.2. General

On planing hulls, the effect of trim and adjustment of trim can have a significant impact on hull efficiency, engine performance, and reduction of impact stress and injuries to boat crews. Once the vessel is brought up on a plane, the trim can be adjusted to reduce contact with the water (drag). The ideal trim angle is found by gradual manipulation of the trim controls in various sea states until the operator becomes acclimated to hull response in a wide spectrum of conditions. To determine the correct setting for trim angle, first balance the boat by correctly loading personnel, fuel and equipment with due regard to the longitudinal center of gravity (LCG).

B.2.a. Definitions

Term	Definition/Affect on Steering
Chine	The fore-to-aft edge created at the intersection of the bottom and the sides of a flat bottom or "V" hull boat. The chine is roughly parallel with the keel near the aft part of the boat. Steering can be directly affected if a boat is heeled over too far, as the chine replaces the keel's normal effect on directional stability
Hooking a Chine	The effect of the chine catching the water when making a hard turn while trimmed out. The results can be violent in nature, the physical forces of which may cause personnel in the boat to be thrown in the direction of momentum.
LCG	The longitudinal center of gravity is the fore/aft balance point of the boat. Shifting of crew or cargo toward the bow or stern changes the LCG
Tilt	The function of raising the outdrive beyond the trim range. Design features of the tilt function often include a method of locking the outboard or outdrive for trailering
Trim	The fore-and-aft inclination of a boat, down by the head or down by the stern.
Trimmed in	Engines fully tucked against transom. In this position the bow of the non-standard boat will be pushed down by the thrust of the engines and is the safest position when accelerating, performing hard maneuvers, and heading into wind and waves. Also known as "trimmed down"

Definitions (cont.)

Trimmed level	Engines slightly trimmed away from transom. This can be considered as a general running trim, in reasonable conditions, as the thrust from the engines is parallel to the bottom of the non-standard boat.
Trimmed out	Engines trimmed away from transom without causing cavitation. In calm conditions this position will raise the bow increasing the top speed of the boat by reducing hull contact with the water. Also used with caution in following sea conditions, it will improve directional stability and reduce the tendency to broach. Also known as "trimmed up".

B.2.b. Range of Trim

As can be seen from the below image, the arc of movement affecting trim is very small. Even though the physical range of movement for trim is slight, minor adjustments within that arc have a large effect as described below.

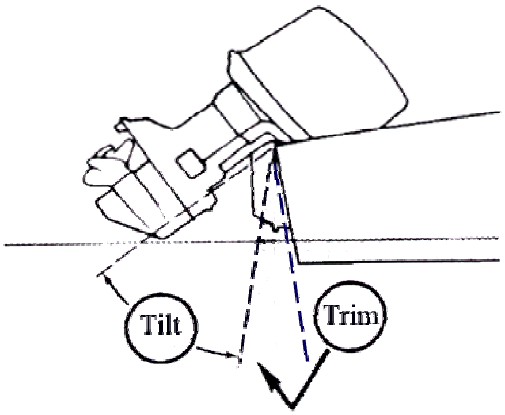

Figure 6-4
Range of Trim

WARNING

Non-standard boats are very sensitive to changes to the LCG. These can occur by adding or subtracting weight, or due to simple crew movements. These changes will change the way the boat handles in any given situation. The coxswain must assess any LCG change and may have to make many trim changes during a sortie.

B.2.c. Trimming out (up)

Bring the boat onto a plane in fairly flat water and trim up to free the hull from the water (reduce drag).

Trimming out (up) raises the bow.

If you continue to trim up too far, the bow will start to rise and will begin to bounce.

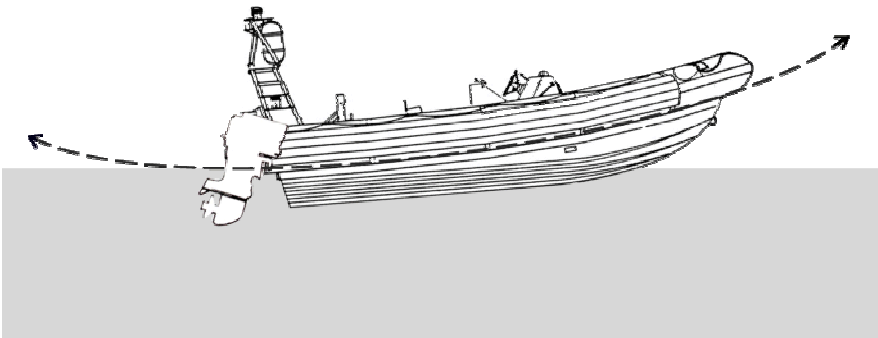

Figure 6-5
Trimming Out (Up)

B.2.d. Trimming in (down)

Trimming in (down) will tuck the outdrive closer against the transom. The boat will handle better when driving into waves, but will slow down and create excessive spray.

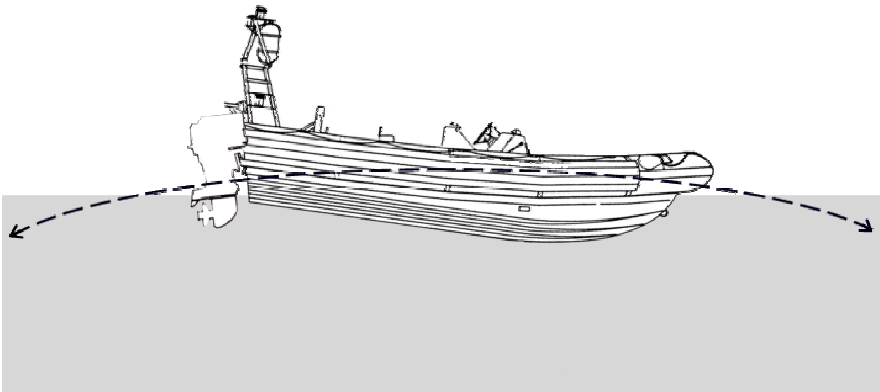

Figure 6-6
Trimming In (Down)

B.2.e. Trimmed level

When properly trimmed, the controls will feel light to the touch, the speed will increase and the spray will be reduced. This is because less wetted surface area of the hull is in contact with the water.

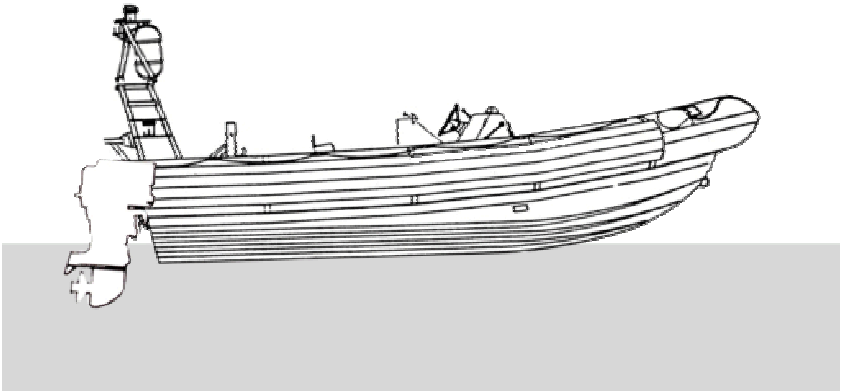

Figure 6-7
Trimmed Level

WARNING

High speed hard turns while ‘trimmed out’ or 'trimmed level' can result in ‘hooking a chine’ causing a violent reaction which may create sufficient force to pitch crewmembers overboard.

CAUTION!

Each non-standard boat will have different trim characteristics and will require practice and experience to master.

Open Water Boat Handling

B.3. General

Some of the information contained in this section may be applicable to other NSBs; however, the main focus is on the open water handling of deep-V rescue boats.

Prior to getting underway, ensure that all gear is secured, all bilge pumps and freeing ports are operational. Weight must be evenly distributed for less wear and tear on the crew and gear; additionally the boat will land on an even keel if airborne. If outfitted with pneumatic collars, they should be properly inflated to the appropriate PSI. Over inflation may cause a hard bounce in the ride.

- Steer around the larger seas, aiming for the low areas or "windows."
- Keep the boat on a plane as it has better acceleration and much better maneuverability in that mode.
- Never use full power except to outrun larger waves as necessary.
- Remember to back off the power when it is not needed.
- Avoid letting the propellers clear the water, as cavitation is likely to occur on re-entry. Additionally, and even more importantly you do not have any steerage when outboards are out of the water.
- Watch ahead and plan your route paying attention to your navigation.
- Be aware that logs and other debris may be hidden behind waves.
- Do not use techniques specific to other boat types, such as wave squashing.

B.3.a. Crew readiness

Ensure that the crew is prepared, secured, and proper PPE is donned.

- Flexing of the knees will help absorb the shock in the knees rather than in the back.
- The crew must watch the seas so they can brace themselves.
- Drive with one hand on the throttles and one on the wheel (11 o'clock position).

- Be aware of the rate of crew fatigue when riding in different positions in the boat (e.g., riding on the tube or standing is more tiring).
- Always ensure crew are in a safe position and aware when accelerating from dead stop to planing mode, or at times when rapid deceleration is deemed necessary.

B.3.b. Cavitation

Cavitation is the result of air contacting the propeller blades, reducing thrust and propulsion efficiency. Continual cavitation can create air bubbles powerful enough to eat away a stainless steel propeller. Additionally, prolonged cavitation will cause wear on the lower unit and powerhead. Tight turns, especially on boats equipped with twin outboards can result in cavitation. If cavitation is experienced while turning, reduce the amount of throttle or ease out of the turn. Cavitation can also be experienced if the engines are trimmed out (up) too far, or while operating in aerated water (such as surf).

B.3.c. Cavitation in aerated water

Operating in aerated water will reduce the amount of 'bite' to the propellers and can reduce the engine's ability to cool itself. The throttles must be used with great care to reduce propeller cavitation.

B.3.d. Running before the seas

In bad weather, the NSB is relatively safe running before the sea due to its speed. If caught in breaking seas, this advantage is used to ride the back of the waves while adjusting speed as required.

While running before the seas, care must be taken to prevent driving over the back of a wave causing the bow to dig into the trough. This can cause directional instability and possible risk of broaching. This risk is increased in steep, close waves. There may not be enough lift in the bow, due to hull type and design, to prevent broaching once caught on the face of a wave.

Powering-on to keep a bow-up attitude on the backside or near the crest of a wave will prevent burying the bow. But as the bow falls (over a crest or into the trough), no increase of power will make enough difference to pull the bow up, and putting more power on will just cause the boat to crash harder into the back of the next wave. If you suspect that the bow may bury ease off the power to stay on the back of the present wave.

If entering a shallow water or surf area, stand off and time the wave sets. Go in on the back of a low swell. Get the boat turned around facing into the wave system before a large set rolls in.

B.3.e. Running beam to the seas

In beam to seas it is best to outrun or let big waves pass in front of the boat. The operator must learn to accurately gauge wave movement or speed as compared to relative boat movement. Discretion, caution and alertness are key elements to safe transits. For big waves, slow and turn into the wave using only adequate power to negotiate the face and get to the top. As the boat gets near the crest, back off power and slide up and over the top of the wave. Maintain control and continue lateral movement across the back of the wave while gauging the approach and size of the next one. Riding the back of the wave gives more control than being on its face.

B.3.f. Running into the seas

When heading into the wind and up the face of large waves, care must be given to avoid over accelerating which can result in the bow being caught and creating a pitch-pole situation.

Watch ahead and pick the low areas. Tack slightly to avoid running directly into the sea, ease off the power at the bottom of the wave.

This will keep the bow on a flat attitude if the boat comes out of the water. In some cases a small increase of power at the top of the wave will keep the boat from falling bow down into the trough.

Personnel Recovery

B.4. General

The rescue of persons from the water has always been a difficult operation. Every PIW rescue will have different characteristics. Prior to making an approach on a person in the water, BRIEF YOUR CREW. Know in advance which side the pickup will be on and what type it will be (reach and grab, personnel retrievel line (PRL), parbuckle, etc).

Remember, your first approach may be your last. If the victim is not wearing a life jacket, he or she may not get a second chance.

NOTE

PIW recovery procedures are described in the Boat Crew Seamanship Manual, COMDTINST M16114.5 (series).

WARNING

Due to the shallow draft of most NSB's, the approach on a PIW should be from *downwind*. This will prevent the NSB from drifting over the top of the victim.

B.4.a. Approach

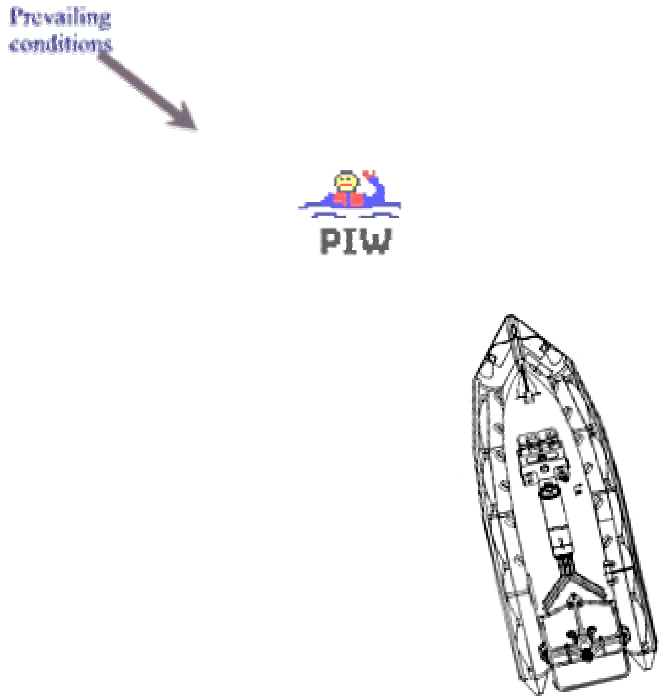

Figure 6-8
Approach

Keeping your bow into the wind, your approach should be at a slow speed to avoid the possibility of overtaking the PIW. Mind the direction of the seas or swells as they may not be coming from the same direction as the wind. This may require an approach angled between the two forces.

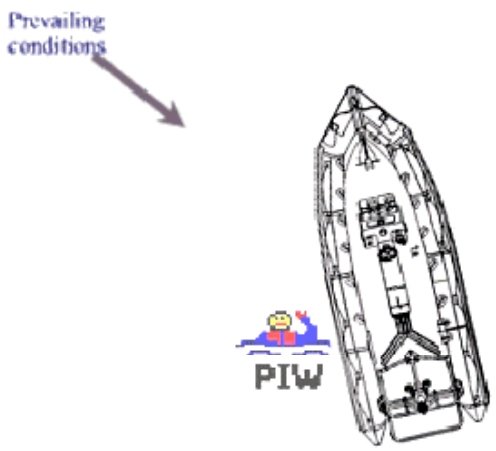

Figure 6-9
Approach

B.4.b. Retrieval Tactics

Different hull configurations will require differing personnel retrieval tactics.

- Hard chine (non-collared) boats may require that the victim have their back towards the hull when using the personnel retrieval line or reach and grab technique.

B.4.c. Personnel retrieval line

Figure 6-10
Personnel Retrieval Line

B.4.d. Reach and grab

Collared boats may require the victim to be facing the boat to avoid injury as they are pulled over the sponson.

Figure 6-11
Reach and Grab

Figure 6-12
Reach and Grab

WARNING

As you approach the PIW, take extra caution to prevent injury by the propellers.

WARNING

The throttles should be in neutral while subject is being extracted from the water.

B.4.e. Parbuckling

Parbuckling is a technique used to recover an unconscious or unresponsive victim. Using either a single line or two lines, attach them inside the gunwale approximately four feet apart. As the boat approaches the victim, the crew will reeve a bight of each line around the feet and torso of the victim.

Figure 6-13
Parbuckling

Once the victim is in position, the crew takes even strains and rolls the victim into the boat.

Figure 6-14
Parbuckling

WARNING

Care must be taken to prevent the line from slipping off the torso of the victim around their neck.

Towing

B.5. General

Towing a disabled vessel requires a high degree of awareness of all potential hazards as well as a full knowledge of the capabilities and limitations of the particular components within the towing operation. The safety of your crew and the crew of the towed vessel is more important than property.

NOTE

Towing procedures are described in the Boat Crew Seamanship Manual, COMDTINST M16114.5 (series).

B.5.a. Angular momentum

Overcoming angular momentum can be far more hazardous on smaller non-standard platforms with non-displacement hulls. Attempts to correct angular momentum can create a *tripping* hazard. If your vessel is caught in a tripping situation, the coxswain must attempt to maneuver to position the stern back under the towline, or in extreme situations, sever the towline at the bit.

WARNING

Non-standard boats, due to their limited size and hull design, are more susceptible to tripping. A boat is said to be tripping when it is towed sideways by an opposing force on its own towline. There is imminent danger that a boat will capsize when in a tripping situation

Anchoring

B.6. General Care must be taken when anchoring to ensure a fairlead of the anchor line over the bow.

WARNING

If the anchor line fairlead is from any point other than the bow, there is the potential for a tripping hazard and possible capsize. Never anchor from the stern.

NOTE

Anchoring procedures are described in the Boat Crew Seamanship Manual, COMDTINST M16114.5 (series) .

Section C. Launch and Recovery

Introduction

While not covered in significant detail in other directives, delivering your boat to the water by road, ramp and davit are significant evolutions that carry risk and should be attempted only after training. The following sections should help build the base of knowledge necessary to assist in training for these evolutions.

In this section

This section contains the following information:

Topic	See Page
Trailering	6-24
Launching	6-31
Recovery	6-33
Underway (shipboard)	6-34 (TBD)

Trailering

C.1. General

Your boat trailer is an important part of your boating equipment. All too often, a trailer does not receive the attention that it demands and deserves. After selecting the appropriate trailer for your boat and tow vehicle, proper maintenance and continual care when hitching and towing are necessary.

WARNING

If care and maintenance are neglected, you may be endangering the safety of your boat, your vehicle, your crew, yourself and the public.

One of the few absolute limits in trailering a boat is its width. Without a special permit, the widest boat that can be trailered on most state roads is eight feet. On interstate highways, on some access roads, and on federally supported highways with twelve-foot lanes, the maximum width is 8.5 feet. These widths include both the boat and the trailer.

Trailers are divided into classes based on the total weight of the trailer and its load. The load includes all the miscellaneous gear, which is stowed in the boat, such as the engines, fuel tank(s), fuel, and required safety equipment.

C.1.a. Capacity rating

The Capacity Rating of the trailer should be greater than the combined basic weight of the boat, engines, and equipment (including fuel). Federal law requires that all trailers have certain important capacity information displayed. The Gross Vehicle Weight Rating (GVWR) for the trailer must be displayed. This includes the trailer and all weight it is expected to carry. The Gross Axle Weight Rating (GAWR) capacity information specifies the proper tires needed to carry the load for which the trailer is rated. On multi-axle trailers, the combined GAWR of all axles must be equal to or greater than the GVWR for the trailer.

C.1.b. Weight

The driver/boater needs to know at the very least, two important weights, gross vehicle weight and tongue weight. Safe trailering requires that the trailer be properly balanced and loaded. Overloading a trailer on the highway is as dangerous as overloading a boat on the water.

C.1.c. Gross Vehicle Weight

To determine the gross vehicle (trailer) weight, load the trailer with everything that normally would be on it during transportation. Take the rig to the nearest scale that has a platform, such as a highway patrol weighing station, and weigh the rig without the towing vehicle, unhitched and supported on a jack. This will give the gross trailer weight. It is important that the gross trailer weight (Gross Vehicle Weight) does not exceed the Gross Vehicle Weight Rating as shown on the capacity label. Keep the trailer in a level position by adjusting the jack-caster assembly.

Carrying SAR gear in the tow vehicle may reduce the gross weight of the trailer. The amount of fuel and any water in the boat (from rain, for example) may add substantially to the trailer's gross weight and play havoc with the load distribution. Pull out the boat's drain-plug to make certain there is no water in the boat before towing. It should be drained and re-plugged prior to departing the unit.

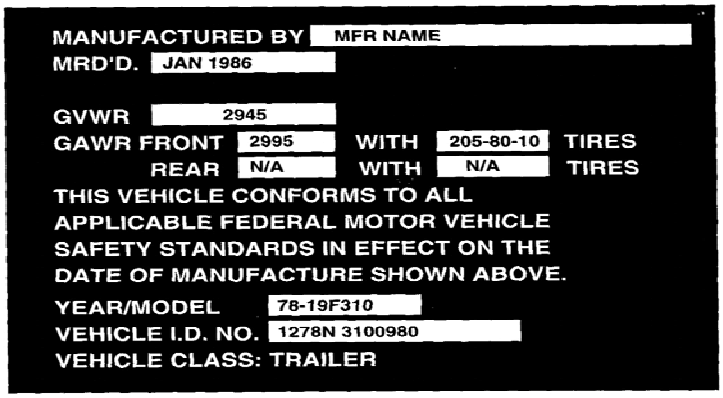

Figure 6-15
Capacity Label

C.1.d. Tongue weight

The difference between the Gross Trailer Weight and the Gross Axle Weight is the Tongue Weight. In loading the trailer, it is important that the weight distribution on the trailer is such that the recommended tongue weight is maintained.

C.1.e. The Hitch

Choosing the proper class of hitch for the weight of the trailer being towed is very important. There are two basic types of hitches, the weight carrying hitch and the weight distribution (or load equalizer) hitch.

The class of hitch required will depend on the Gross Trailer Weight and its tongue weight.

The checklist included as Appendix E can help units choose the right towing system for their needs.

Class I	Designed for light loads generally less than 2,000 lbs.
Class II	Frame mounted hitches and rated for up to 3,500 lbs.
Class III	Up to 5,000 lbs.
Class IV	Up to 10,000 lbs.

Class III and IV hitches are weight distribution hitches and are designed to spread the tongue weight to both the front and rear wheels of the tow vehicle.

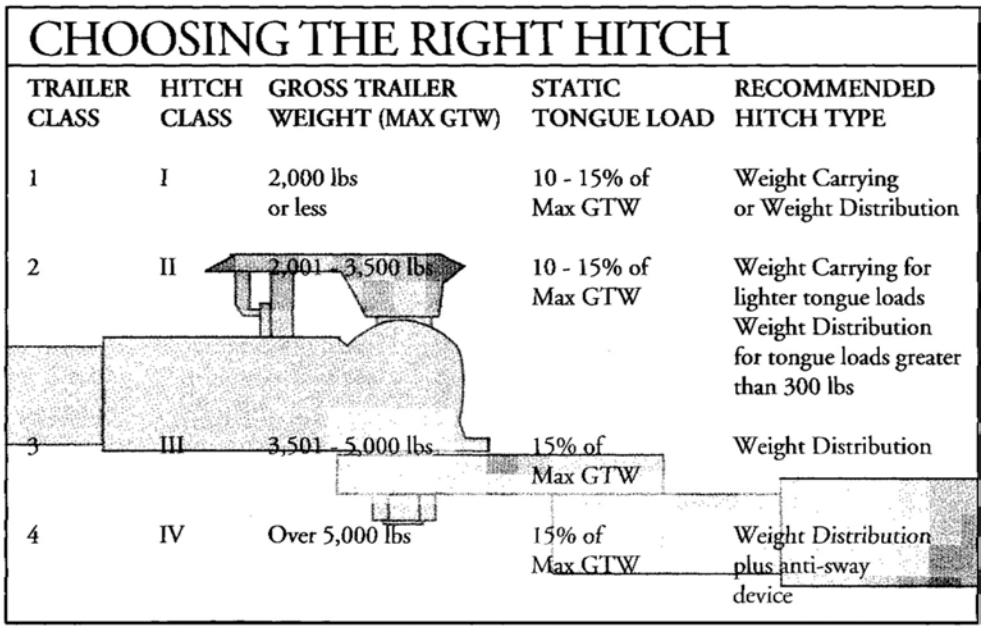

CHOOSING THE RIGHT HITCH

TRAILER CLASS	HITCH CLASS	GROSS TRAILER WEIGHT (MAX GTW)	STATIC TONGUE LOAD	RECOMMENDED HITCH TYPE
1	I	2,000 lbs or less	10 - 15% of Max GTW	Weight Carrying or Weight Distribution
2	II	2,001 - 3,500 lbs	10 - 15% of Max GTW	Weight Carrying for lighter tongue loads Weight Distribution for tongue loads greater than 300 lbs
3	III	3,501 - 5,000 lbs	15% of Max GTW	Weight Distribution
4	IV	Over 5,000 lbs	15% of Max GTW	Weight Distribution plus anti-sway device

Figure 6-16
Choosing the Right Hitch

C.1.f. Trailering the boat

More damage can be done to a boat by the stresses of road travel than by normal on-the-water operation. A boat hull is designed to be supported evenly by water. When transported on a trailer, the boat should be supported structurally as evenly across the hull as possible. This will allow for even distribution of the weight of the hull, engine/s, fuel, and equipment. It should be long enough to support the whole length of the hull, but short enough to allow the lower unit(s) of the boat's engine(s) to be extended freely.

Rollers and bolsters must be kept in good condition to prevent scratching and gouging the hull.

Tie-downs and lower unit supports must be adjusted properly to prevent the boat from bouncing on the trailer. The bow eye on the boat should be secured with a rope, chain or turnbuckle in addition to the winch cable. Additional straps may be required across the beam of the boat.

The capacity of the trailer should be greater than the combined weight of the boat, engine(s), fuel, and equipment.

The tow vehicle must be capable of handling the weight of the trailer (with boat and equipment), as well as the weight of the passengers and equipment carried inside the vehicle. This may require that the tow vehicle be specially equipped with the following:

- Engine of adequate power
- Transmission and rear-end designed for towing
- Larger cooling systems for the engine and transmission
- Heavy duty brakes
- Load bearing hitch attached to the frame, not the bumper.

Appendix E is a checklist that will help the unit determine if a vehicle is appropriate to tow a given trailer.

C.1.g. Towing precautions

Pulling a trailer presents several problems: more time is required to brake, accelerate, pass, and stop. The turning radius is also much greater; curbs and roadside barriers must be given a wide berth when negotiating corners. Prior to operating on the open road, the vehicle operator should practice turning, backing up, and other maneuvers on a level, uncongested parking area. Backing a trailer is a challenge even to the most experienced drivers and requires considerable practice.

C.1.h. Pre-trailering checklist

- Ensure the tow ball and coupler are the same size and bolts with washers are tightly secured. (The vibration of road travel can loosen them.)
- Confirm the coupler is completely over the ball and the latching mechanism is locked down and secured.
- Ensure the safety chains are attached, crisscrossing under the coupler, to the frame of the tow vehicle. If the ball was to break, the tongue would be held up by the chains, allowing the trailer to follow in a straight line and prevent the coupler from dragging on the road.

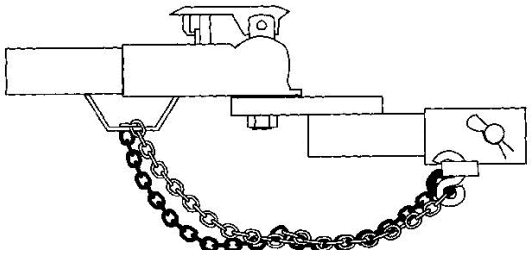

Figure 6-17
Safety Chains

WARNING

- Check all the lights and signals on the trailer to ensure they function properly. Trailer lights that are submerged during launching/recovery will have a more frequent failure rate and should be serviced frequently. Trailer lighting problems are often caused by poor ground connection between the tow vehicle and the trailer.
- Check the brakes. On a level parking area, roll forward and apply the brakes several times at increased speeds to determine a safe stopping distance. (Do not tow any trailer faster that 55 mph – some states, 45 mph) The side-view mirrors of towing vehicles should be large enough and adjusted to provide an unobstructed rear view on both sides of the vehicle.
- Check tires (including spare) and wheel bearings. Improper inflation may cause difficulty in steering. When trailer wheels are immersed in water (especially salt water) the bearings should be inspected and greased on a regular basis

WARNING

- Rainwater or water from cleaning is undesirable for many reasons, but mainly because a collection of it can rapidly increase weight on the trailer, often beyond its capacity. Furthermore, the extra weight may shift with the movement of the trailer and cause a dangerous situation.
- Ensure the trailer is loaded evenly from front to rear as well as side-to-side. Too much weight on the hitch will cause the rear of the tow vehicle to sag and may make steering more difficult. This can also cause your headlights to shine into the eyes of oncoming traffic.

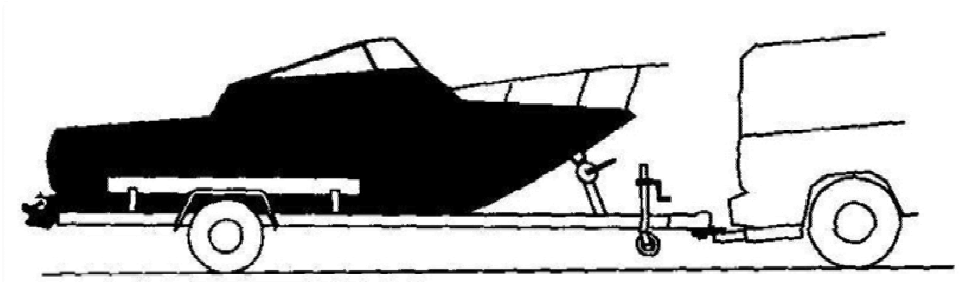

Figure 6-18
Too Much Weight on the Hitch

- Too much weight on the rear of the trailer will cause the trailer to "fishtail" and may reduce traction or even lift the rear wheels of the tow vehicle off the ground.

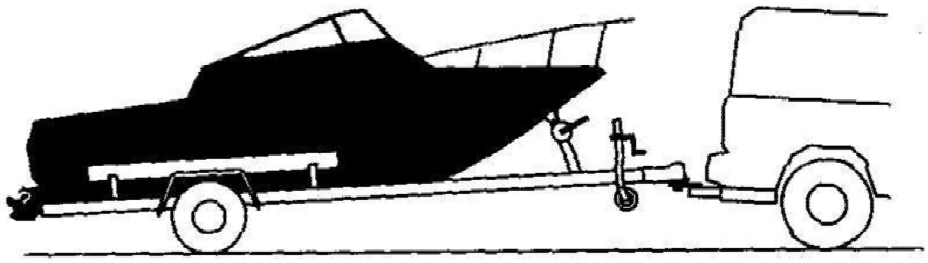

Figure 6-19
Too Much Weight on the Rear of the Trailer

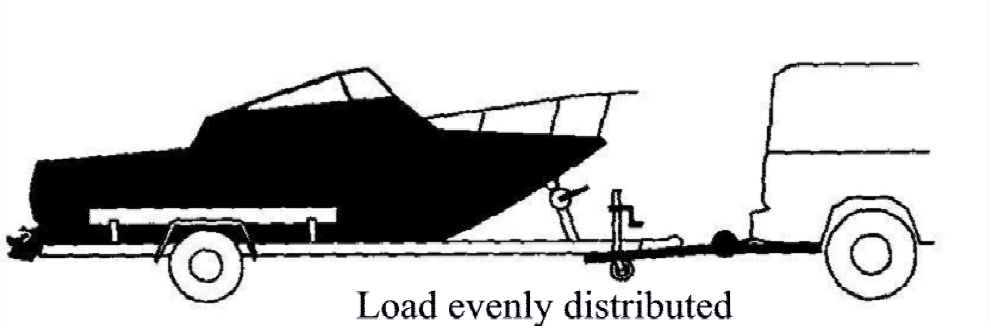

Figure 6-20
Load Evenly Distributed

Accelerating: The added weight of the boat trailer and gear will cause the vehicle engine to work harder when accelerating. Allow the vehicle to reach a comfortable driving speed gradually.

Braking: Use firm and steady pressure on the brake pedal. Slamming the brakes suddenly can cause the trailer to jack-knife. Extra distance is required for braking when towing a boat.

WARNING

Allow two vehicle lengths of distance between you and the vehicle ahead of you for each 10-mph of speed. Consider increasing this distance if environmental conditions dictate.

Cornering: Drive your vehicle slightly past the normal turning point then begin your turn. Cornering at a wider angle will keep the trailer wheels from clipping curbs or cutting across a traffic lane.

Passing: Not recommended. If you must pass, allow additional time and distance to safely pass the other vehicle, signal your intention to pass well in advance, and make certain your trailer is clear of the passed vehicle before you reenter the lane.

CAUTION!

Become familiar with your state's highway and traffic laws relating to the towing of trailers.

WARNING

Towing of Coast Guard boats over the road in a response fashion (Lights and siren) is an extremely dangerous operation. Units and their operational commanders should consider the risk exposure associated with high speed over the road towing operations. Local laws, required training for operators, protocols, permits and risk management should, at a minimum, be discussed.

Launching

C.2. Launching Checklist

- Check the boat to insure that no damage was caused during the trip.
- Raise the lower unit of the engine(s) to the proper height for launching so as not to hit bottom.
- Make sure the drain plug is in securely.
- Remove tie downs and make sure that the winch is properly attached to the bow eye and locked in position. As an added safety feature, a redundant line may be added to the trailer eye to reduce risk in the event of a winch or winch cable failure.
- Disconnect the trailer lights to prevent shorting the electrical system or burning out the bulb.
- Attach a line to the bow and the stern of the boat so that the boat cannot drift away after launching and can be easily maneuvered to a docking area.
- Visually inspect the launch ramp for hazards such as a steep drop off, slippery areas and sharp objects.
- After everything has been double checked, proceed slowly to the ramp remembering that the boat is just resting on the trailer and attached only at the bow by the winch cable and safety line if you chose to add one. The ideal situation is to have one person in the boat and one observer at the water's edge to help guide the driver of the tow vehicle.

CAUTION!

Always use a spotter as a guide while backing at a launch ramp or into a parking stall.

WARNING

It is unsafe to stand on the tongue of the trailer when it is being backed down or driven up the boat ramp.

Launching checklist (cont.)

- Keep the rear wheels of the tow vehicle out of the water. This will generally keep the exhaust pipes out of the water. If the exhaust pipes become immersed in the water, the engine may stall.
- Set the parking brake and place tire chocks behind front wheels.
- Make sure someone else on shore (or the dock) is holding the lines attached to the boat.
- Once in the water, lower the engine (be certain there is sufficient depth as not to damage the prop) and prepare to start the engine (after running blowers and checking for fuel leaks).
- Start the boat engine and make sure that water is passing through the engine cooling system.
- Release the winch and disconnect the winch line from the bow when the boat operator is ready.

At this point, the boat can be launched with a light shove or by backing off the trailer under power. Finish loading the boat at a sufficient distance from the ramp so that others may use the launch ramp.

Recovery

C.3. General

The steps for removing the boat from the water are basically the reverse of those taken to launch it. However, keep in mind that certain conditions may exist during retrieval that did not exist during launching. When approaching the takeout ramp, take special care to note such factors as:

- Change in wind direction and/or velocity.
- Change in current and/or tide.
- Increase in boating traffic.
- Visibility, etc.

First, unload the boat at a dock or mooring if possible. Next, maneuver the boat carefully to the submerged trailer; stop the engine(s) and raise the lower unit(s). Secure the engine(s); then winch the boat onto the trailer and secure it.

CAUTION!

Use the winch to position the boat on the trailer. Driving the boat onto the trailer may cause damage to the hull, sponsons, or collar, as the bow strikes the bow stop.

WARNING

Never allow a person to stand in line with the winch cable when it is loaded or taut.

Finally, drive the trailer with the boat aboard carefully to a designated parking area for cleanup, reloading, and an equipment safety check. Practice will make launching and retrieval a simple procedure.

C.4. Underway (shipboard)

To be developed.

Section D. Special Operations

Introduction Special Operations not covered elsewhere.

In this section This section contains the following information:

Topic	See Page
Surf Operations	6-36
Helicopter Operations	6-39

Surf Operations

D.1 General

Currently, there are no non-standard boats capable and authorized to safely operate in the surf. This is due to the limited crew protection and the lack of inherent self-righting capability. However, there may be rare situations where surf conditions cannot be avoided. The following will provide some terminology and maneuvers that will enable you to depart a surf zone.

WARNING

If you find yourself operating in or near surf conditions, notify your OPCON immediately. Maintain more frequent radio checks that will allow early alert to trouble. Risks in these areas are very high and mishaps occur extremely fast without time to report the event.

D.1.a. Definitions

Term	Definition
Plunger	A breaking wave that results from long ground swells that telescopes on meeting a steep rise on the ocean floor such as an inlet or shoal. The bottom of the wave slows down and the top falls over causing the wave to plunge (characterized by the curl or tube along the wave face). They are usually larger waves that rise up suddenly and break with tremendous force.
Spiller	Generally a slower or smaller wave that breaks on a gradual sloping beach. These are generally gentler waves than plungers in that the force held by the wave is being more gradually expended. Wind generated waves in open water that build large enough to become unstable will often become a spilling breaker. These are also referred to as “sluffers”.
Surging waves	Occur around steep beaches and of small to moderate wave size. The waves break as they rise up and down the face of the beach/shoreline. These are not a hazard unless you are beaching the NSB. This type wave will often swamp the boat as it is overtaken when the bow reaches the beach. They may also broach and capsize the boat at that point when it is most vulnerable.

Definitions (cont.)

Windows	An area where the waves have momentarily stopped breaking, opening up a safer area of operation for a boat. Windows often form in the area of aerated water where a large set of waves has just finished breaking. They may remain for a long time or may reform and begin breaking again almost immediately
Wave saddle and closeouts	A low spot in the wave crest, it is often a small-unbroken section of a wave that is breaking. It is preferable to maneuver a boat through saddles, if possible, thus avoiding the whitewater. When a wave breaks both ends towards the middle it can quickly "closeout" the saddle with more energy than a single breaker.
High/Low side and wave shoulder	The high side of a wave is the part building towards the breaking point (carries the most potential energy about to be released). The low side is the area of least potential energy and the safest direction to turn toward. The shoulder is the edge of the wave leading up to the whitewater or breaking point. It is often lower in height than the middle of the wave. The shoulder may be particularly useful in escaping a narrow surf zone as it allows the boat to be driven very close to the breaker without actually taking the full force of the wave.
Lulls	The lull period of a wave system is a relatively safer time to transit a bar, inlet, or shoal area. The lull is the relatively calmer period between wave series (wave trains). Timing this pattern is useful so that movements in the area can be made avoiding the worst conditions. The duration of the lull may range from less than a minute to several minutes. The area and moving wave series must be observed for as long as possible until a consistent pattern is discerned. Making a transit or conducting a maneuver during the lull is the optimum goal but coxswains must be wary that another series could arrive at any time.

D.1.b. Maneuvers

You must never be caught broadside or quarter to a breaking or spilling wave. If you must meet a wave, do it bow on. While departing a surf zone during windows or lulls, you may need to employ a maneuver called an Emergency turn (E-turn) in order to meet an oncoming wave.

D.1.c. Emergency turn (E-turn)

Tight turns can be made by reducing throttle as the helm is put over, then increasing throttle as the boat heads up on its new course.

WARNING

This maneuver must be performed when the boat is trimmed in (down). If attempted while trimmed out and on plane, it is possible to hook a chine and eject crew from the boat.

D.1.d. Emergency beaching

In an emergency, the non-standard boat can be beached. The method of beaching in an emergency, is a matter of judgement, experience and local knowledge of the beach by the coxswain. Without this judgement, experience, and knowledge, an emergency beaching should not be attempted unless life is at risk.

WARNING

If beaching is required and surging waves are present, the coxswain should maintain position on the back of a wave until the wave has expended its force. If the boat gets too far forward, there is danger of pitch poling or capsizing.

Helicopter Operations

D.2. General

Helicopter operations are hazardous under any circumstance. Due to the limiting factors described below, the procedures outlined here in conjunction with those listed in the Boat Crew Seamanship Manual, COMDTINST M16114.5 (series) should be considered prior to engaging in helicopter operations..

D.2.a. Limiting factors

The non-standard boat is limited in its suitability as a platform for helicopter operations by several factors including:

- Relative light weight of vessel
- Limited working space
- Lack of crew protection
- Limited crew size
- Loss of communications due to noise

D.2.b. Crew placement

Due to the variety of configurations of our non-standard boats, crew placement will be dictated by the location of available space. Some boats may simply not be suited for this evolution, and hoisting from/to them should eliminated as an option.

A common crew placement strategy is to have two crewmembers on the bow or stern to work the hoist. This in itself limits the ability of the resource due to the minimum crew size. Stokes litter hoists and trail line hoists are especially difficult and should not be attempted when operating with the minimum crew.

WARNING

All stokes litter hoists require the use of a trail line to control spin. If unable to conduct a trail line hoist due to insufficient crew, the NSB will not be used.

D.2.c. Procedures

Detailed procedures and instructions on helicopter operations are contained in the Boat Crew Seamanship Manual, (COMDTINST M16114.5 series).

CAUTION!

Crews conducting trail line hoist evolutions must tend the trail line at all times. Some deck configurations or design will not contain slack line if loose on the deck. This may result in the trail line fouling the NSB's propellers if it goes over the side.

Chapter 7 Preventive Maintenance

Overview

Introduction

The best casualty control is to prevent casualties through good maintenance and proper seamanship. Many casualties can be avoided through careful and meticulous daily check-offs, a sample of which is provided in Appendix B.

District Commanders should establish preventive maintenance procedures for NSBs in their AOR. A sample Preventive Maintenance System is provided in Appendix D.

In this chapter

This chapter contains the following sections:

Section	Topic	See Page
A	Preventive Maintenance Program	7-3

Section A. Preventive Maintenance

A.1. General

District Boat Managers/Boat Maintenance Managers should establish preventive maintenance requirements for NSBs in their AOR. A generic Preventive Maintenance program is provided in Appendix D. All maintenance should be performed in accordance with manufacturer's technical publications and operator's manuals.

Appendix A Glossary of Terms

A.1. Glossary of Terms

Term	Definition
Chine	The fore-to-aft edge created at the intersection of the bottom and the sides of a flat bottom or "V" hull boat. The chine is roughly parallel with the keel near the aft part of the boat. Steering can be directly affected if a boat is heeled over too far, as the chine replaces the keel's normal effect on directional stability.
Chine walking	A side-to-side rocking motion achieved at higher speeds. Usually a result of excessive lift. This can be a result of poor hull design or more likely caused by over trimming of the engines.
Deadrise	Vertical degree of angle between a vessel's keel to its chine.
Forefoot	The part of the keel that curves up to meet the stem, or where the stem joins the keel of a ship or boat. (Similar to the *entry*. That part of a boat's hull from amidships forward).
Hooking a Chine	The effect of the chine catching the water when making a hard turn while trimmed out. The results can be violent in nature, the physical forces of which may cause personnel in the boat to be thrown in the direction of momentum.
Keel	Central longitudinal beam or timber of a ship from which the frames and hull plating rise.
Lift	The act of yielding to upward pressure.
Longitudinal Center of Gravity (LCG)	The location of the center of gravity measured on the middle longitudinal center plane.
On Plane/step	When a planing hull has achieved its cruising speed.
Planing Hull	A boat design that allows the vessel to ride with the majority of its hull out of the water once it's cruising speed is reached.
Strake	External longitudinal designed to create lift and to prevent chine walking.

Glossary of Terms (cont.)

Tilt	The function of raising the outdrive beyond the trim range.
Trim	The fore-and-aft inclination of a boat, down by the head or down by the stern.
Trimmed In	Motors fully tucked against transom. In this position the bow of the non-standard boat will be pushed down by the thrust of the engines and is the safest position when accelerating, performing hard maneuvers, and heading into wind and waves.
Trimmed Level	Engines slightly trimmed away from transom. This can be considered as a general running trim, in reasonable conditions, as the thrust from the motors is parallel to the bottom of the non-standard boat.
Trimmed Out	Engines trimmed away from transom without causing cavitation. In calm conditions this position will raise the bow increasing the top speed of the boat by reducing hull contact with the water. Also used with caution in following sea conditions, it will improve directional stability and reduce the tendency to broach.

Appendix B Daily Check-off

Overview

Introduction

This appendix provides a systematic means to inspect any non-standard boat and ensure it is ready to meet operational missions. This checklist shall be performed daily in conjunction with the daily engineering inspection (D-1-A Daily Check).

In this appendix

This appendix contains the following information:

Area	See Page
Forward Compartment	B-3
Main Deck	B-3
Console	B-3
Operational Checks	B-4
Discrepancies	B-5

Boat#_____	**Date_____**	
I. Forward Compartment	**Yes**	**No**
Anchor		
Anchor Chain 3/16”		
Mooring Lines		
Compartment dry and free of salt or corrosion		
II. Main Deck		
Fire Extinguisher 2lb PKP		
EMT Pack/First Aid Kit		
Foot Pump (Pneumatic Sponsons only)		
Mooring Lines		
200' 1.5 ”" DBN Towline		
Heaving Line/Rescue Throw Bag (ensure throw bags are free of mildew		
Survival Knife (rust free)		
Throwable 24" life ring		
EPIRB (if operating in excess of 10 nm offshore)		
Skiff Hook		
III. Console		
Motor Safety Lanyard (Kill Switch)		
Sound Producing Device		
Boat Data Plate		

Classification Placard		
No Smoking Placard		
Spot Light Plugs free of salt/corrosion		
VHF-FM		
VHF-FM Handheld		
Ensure electronics covers are in place		
IV. Operational Checks	**Yes**	**No**
Console Lights		
Navigational Lights		
Horn		
VHF-FM Radio (obtain radio check on 16 and operational frequency		
Blue Light		
Fathometer		
Radar		
Gauges		
GPS		
Tow/Anchor lights		
Loud Hailer		

V. Discrepancies	
_____ _____ _____ _____ _____ _____ _____ _____ _____ _____	
Inspector's Signature:_____	Coxswain Signature:_____
OOD Signature: _____	

Appendix C NSB Outfit List

Overview

Introduction

This appendix is the recommended boat outfit for the NSB. District Commanders may use this list and the particular operational needs of their resources to establish boat outfit requirements.

NOTE

Care must be taken to properly secure any extra gear and to ensure it does not interfere with safe egress or the boat's standard outfit/systems.

Outfit Item	Quantity
Anchor	1 Each
Anchor Chain 3/16 in	5 Ft
Boarding Kit (as required)	1 Kit
Boat Crew Survival Vest	1 per crewmember
Boat Hook 6 ft Telescoping W/ Skiff hook attachment	1 Each
Compass	1 Each
Emergency Tool Kit with the following: • Spare fuses (as req.) • Rags and Electrical Tape • Gas cap key • Misc. tools (as req.) • Misc. bulbs	1 Kit
EMT Pack/First Aid Kit	1 Each
EPIRB (for boats operating in excess of 10 NM offshore)	1 Each
Fire Extinguisher 2 LB PKP	1 Each
First Aid Kit	1 Each
Foot Pump (Pneumatic Sponsons only)	1 Each
Mooring Lines	4 Each
Motor Safety Lanyard (Kill Switch)	2 Each

Navigation Kit with the following: • Charts • Red Light • Navigation Slide Rule • Search pattern Slide Rule • Pencils • Compass and Divider	1 Kit
Portable Spot Light	1 Each
Pyrotechnics Kit with the following: • 6 ea. MK 127 • 6 ea. MK 124 Day/Night • 2 kit MK 79	1 Kit
Shackles, 1/2" de-anchoring	2 Each
Skiff hook w/ 1.5” DBN 12ft line attached	1 Each
Sound Producing Device	1 Each
Spare Oil	2 Quarts
Survival Knife	1 Each
Towline 1.5” DBN	200 ft (recommended)
Tow Bridle 1.5” DBN 15ft length w/ double eye pendants	1 Each
Throwable 24" life ring W/Strobe Light Attached	1 Each
VHF-FM Radio	1 Each
VHF-FM Handheld	1 Each

Appendix D Preventive Maintenance

Overview

Introduction

A good preventive maintenance program will prolong the life of your boat and it's power plant. It will also increase unit readiness and reduce overall maintenance and repair costs for a vessel.

This maintenance program is only a suggested framework. Units should follow local SOP, manufacturer's recommendations and more specific Coast Guard engineering directives where applicable.

In this appendix

This appendix includes the following sections:

Section	Topic	See Page
A	Daily Checks	D-3
B	Weekly Maintenance	D-5
C	Monthly Maintenance	D-9
D	Quarterly Maintenance	D-19
E	Semi-Annual Maintenance	D-31
F	Annual Maintenance	D-35

Section A Daily Checks

A.1. Daily Checks

D-1-A DAILY CHECKS

System		**SUB SYSTEM**	
Description	DAILY ROUTINE	**FREQUENCY**	**Daily**

Safety Precautions

- Observe standard safety precautions
- Perform in accordance with manufacturer's specifications

Tools, Parts, Materials, Test Equipment

Procedure

Step	Action
1	Energize blower (if equipped), and run for one minute minimum to evacuate possible gasoline fumes in voids.
2	Check all fluid levels.
3	Lower engines to operating position.
4	Inspect battery caps for signs of acid build-up. Check for water in bottom of battery compartment. Ensure terminals are clean, tight, and free of corrosion. Ensure water levels are topped off.
5	Turn battery switch to the #1 position. If there is not enough power, switch it to the #2 position. If more power is still required, switch it to the all position, or if equipped with interconnect switch, follow interconnect procedures.
6	Start and run engines for 5+ minutes and log start time. Ensure outboard engines are trimmed up at a slight up angle. (this will prevent outboard oil from building up at the throat of the bottom carburetor and eventually fouling the spark plugs).
7	When starting engine, ensure that self-test alarm system is functioning. Also, immediately check telltale for operation of water pump.

Procedure (cont.)

8	**Test operation of:** • Fathometer • Combination bow light • Anchor/stern light • Binnacle or instrument lights • Steering • Horn • Blue light • Bilge pump switches (if equipped) • Check bilge pump float in bilge for restrictions (if equipped)
9	Obtain radio check on VHF-FM channel 16 and your local working frequency.
10	Test bilge pump operation.
11	Secure engine and log secure time.
12	Check fuel level.
13	Check VRO tank level, add if below 3/4 full.
14	Tilt engines to full upward position.
15	Clean lower unit or outboards of daily growth to prevent marine growth from blocking cooling ports.
16	Inspect hydraulic steering fluid reservoir level.
17	Inspect steering linkage integrity.
18	Inspect fuel hoses, fuel balls, and hose clamps; including the clamps located on the top of the fuel tanks.
19	Inspect drain tubes/flaps for integrity and blockage.
20	Secure battery switches.
21	Check tube inflation. Pump tubes to manufacturer's recommended psi. (Remember air temp has an effect on psi).

Section B Weekly Maintenance

Introduction Weekly maintenance.

In this section This section contains the following information:

Topic	See Page
Lower Unit Oil	D-6
Propeller Inspection	D-7
Fire Extinguisher	D-8

B.1. Lower Unit Oil

W-1-M LOWER UNIT OIL

System	Main Engines	**SUB SYSTEM**	Lower Unit
Description	**LOWER UNIT OIL LEVEL**	**FREQUENCY**	**Weekly**

Safety Precautions

- Observe standard safety precautions
- Perform in accordance with manufacturer's specifications
- Put boat on trailer

Tools, Parts, Materials, Test Equipment

- Rags
- Standard blade screwdriver

Procedure

Step	Action
1	Ensure that boat is on a level surface.
2	Lower engines to the down position for one hour prior to performing. Engines trim plates should be parallel with the water.
3	Remove fill screw on lower unit and check the oil for water or signs of water intrusion. Oil should weep from vent hole
4	Oil change recommended after 100 hours of operation. Check appropriate manufacturer's technical publications.

B.2. Propeller Inspection

W-2-M PROPELLER INSPECTION

System	MAIN ENGINE	**SUB SYSTEM**	PROPELLER
Description	**PROPELLER INSPECTION**	**FREQUENCY**	**Weekly**

Safety Precautions

- Observe standard safety precautions
- Perform in accordance with manufacturer's specifications
- Remove boat from water and perform test on land

Tools, Parts, Materials, Test Equipment

Procedure

Step	Action
1	Inspect propeller blades for any nicks or deformities.
2	Inspect hub nut, cotter key, and nylon spacer for damage, cracking or excessive wear.
3	Check for fishing line on propeller shaft.

B.3. Fire Extinguisher

W-3-A FIRE EXTINGUISHER

System	AUXILIARY	**SUB SYSTEM**	DAMAGE CONTROL
Description	DRY CHEMICAL FIRE EXTINGUISHER MAINTENANCE	**FREQUENCY**	**Weekly**

Safety Precautions

- Observe standard safety precautions
- Perform in accordance with manufacturer's specifications

Tools, Parts, Materials, Test Equipment

Procedure

Steps	Action
1	Remove fire extinguisher from its bracket.
2	Ensure pull pin and safety seal are intact.
3	Invert the extinguisher and strike the bottom several times to loosen the powder.
4	Insure the gauge reads in the safe zone.
5	Replace the extinguisher in its bracket.

Section C Monthly Maintenance

Introduction Monthly maintenance.

In this section This section contains the following information:

Topic	See Page
Zinc Anodes	D-10
Fuel Hose Inspection	D-11
VRO Primer Bulb Inspection	D-12
Fuel Strainer Cleaning	D-13
Boat Trailer Inspection	D-14
Fire Extinguisher	D-16
Lubricate Hinges	D-17

C.1. Zinc Anodes

M-1-M ZINC ANODES

System	MAIN ENGINES	**SUB SYSTEM**	ZINC ANODES
Description	ZINC ANODE INSPECTION	**FREQUENCY**	**Monthly**

Safety Precautions

- Observe standard safety precautions
- Perform in accordance with manufacturer's specifications

Tools, Parts, Materials, Test Equipment

Procedure

Step	Action
1	Inspect engine and lower unit zincs as applicable.
2	Replace the zincs if they have worn to 2/3 of their original size.

C.2. Fuel Hose Inspection

M-2-A FUEL HOSE INSPECTION

System	AUXILIARY	**SUB SYSTEM**	FUEL SYSTEM
Description	FUEL HOSE INSPECTION	**FREQUENCY**	**Monthly**

Safety Precautions

- No smoking in vicinity
- Observe standard safety precautions
- Perform in accordance with manufacturer's specifications

Tools, Parts, Materials, Test Equipment

Procedure

Step	Action
1	Inspect fuel hoses from tank to engines for cracks, loose clamps and leaks.

C.3. VRO Primer Bulb Inspection

M-3-A VRO PRIMER BULB INSPECTION

System	AUXILIARY	**SUB SYSTEM**	FUEL SYSTEM
Description	VRO PRIMER BULB INSPECTION	**FREQUENCY**	**Monthly**

Safety Precautions

- No smoking
- Observe standard safety precautions
- Perform in accordance with manufacturer's specifications

Tools, Parts, Materials, Test Equipment

Procedure

Step	Action
1	Inspect the VRO primer bulb for cracks and leaks.
2	Squeeze the bulb to ensure that the check valves are operating properly. If bulb is dry, stiff and cracking, replace it.
3	If leaks or defective check valves are discovered, replace the entire tank and hose assembly.

C.4. Fuel Strainer Cleaning

M-4-M FUEL STRAINER CLEANING

System	MAIN ENGINE	**SUB SYSTEM**	FUEL STRAINER
Description	FUEL STRAINER CLEANING	**FREQUENCY**	**Monthly**

Safety Precautions

- No smoking in vicinity
- Observe standard safety precautions
- Perform in accordance with manufacturer's specifications

Tools, Parts, Materials, Test Equipment

- Bucket
- Rags

Procedure

Step	Action
1	Check for presence of water in bowl of RACOR filters.
2	Follow manufacturer's recommendations.

C.5. Boat Trailer Inspection

M-5-A BOAT TRAILER INSPECTION

System	AUXILIARY	**SUB SYSTEM**	BOAT TRAILER
Description	BOAT TRAILER INSPECTION	**FREQUENCY**	**Monthly**

Safety Precautions

- Observe standard safety precautions
- Perform in accordance with manufacturer's specifications

Tools, Parts, Materials, Test Equipment

- Multi-purpose, water resistant grease.
- Tire gauge

Procedure

Step	Action
1	With boat on trailer ensure skid boards and rollers are properly supporting the hull.
2	Place boat in the water.
3	Inspect boards for: • Unusual wear or absence of covering • Warping or cracking • Board supports properly secured
4	Inspect rollers and replace any that are flat or have a worn out center.
5	Inspect trailer hitch and tow ball for cracks and wear.
6	Check tires for proper inflation.
7	Inspect trailer light plug and cable for wear and corrosion.
8	Check all bolted joints for cracks, corrosion, and tightness.
9	Grease all buddy bearings Or applicable grease fittings.
10	Check for operation of all lights.

Procedure (cont.)

11	Fully extend winch strap/cable and inspect for cuts, separation, and hook condition.
12	Inspect brakes and surge brake cylinder (if equipped) in accordance with manufacturer's specifications.
13	Inspect for corrosion and prep, prime, paint (PPP) as necessary.
14	Inspect all features of winch for operation (Retrieving, locking in place, etc.).

C.6. Fire Extinguisher

M-6-A FIRE EXTINGUISHER

System	AUXILIARY	**SUB SYSTEM**	DAMAGE CONTROL
Description	INSPECT DRY CHEMICAL FIRE EXTINGUISHER	**FREQUENCY**	**Monthly**

Safety Precautions

- Observe standard safety precautions
- Perform in accordance with manufacturer's specifications

Tools, Parts, Materials, Test Equipment

Procedure

Step	Action
1	Remove extinguisher from its bracket.
2	Invert the extinguisher and strike the bottom several times to loosen powder.
3	Inspect hose for cracks and plugged discharge
4	Inspect all parts for corrosion and visible damage.
5	Insure pressure gauge is reading in safe zone.
6	Insure safety pin and seal are in place.
7	Record date of inspection and initial it.
8	Inspect mounting bracket and remount extinguisher.

C.7. Lubricate Hinges	**M-7-M**	**LUBRICATE DOOR HINGES**	
System	AUXILIARY	**SUB SYSTEM**	DAMAGE CONTROL
Description	LUBRICATE HINGES	**FREQUENCY**	**Monthly**

Safety Precautions

- No smoking in vicinity.
- Observe standard safety precautions.
- Perform in accordance with manufacturer's specifications

Tools, Parts, Materials, Test Equipment

- OMC triple guard grease or recommended lubricant
- Rags

Procedure

Step	Action
1	Check for operation of hinges.
2	Lubricate as required.

Section D Quarterly Maintenance

Introduction Quarterly maintenance.

In this section This section contains the following information**:**

Topic	See Page
Lubrication	D-20
Power Trim and Tilt	D-21
Fuel System	D-22
Lighting System	D-23
Prop Shaft Lubrication	D-24
Spark Plug Renewal	D-25
Pinion Gear Lubrication	D-26
Supply Battery Inspection	D-27
Hull Inspection	D-28
Brake and Bearing Inspection	D-29

D.1.

Q-1-M LUBRICATION

System	MAIN ENGINE	**SUB SYSTEM**	LUBRICATION
Description	ZERK FITTING LUBRICATION	**FREQUENCY**	**Quarterly**

Safety Precautions

- Observe standard safety precautions
- Perform in accordance with manufacturer's specifications

Tools, Parts, Materials, Test Equipment

- Rags
- Grease gun with general purpose grease

Procedure

Step	Action
1	Clean dirt and old grease from ZERK fittings.
2	Lube the ZERKS in the following locations: • Tilt tube • Steering arm assembly • Engine bonnet latches
3	Wipe away any excessive grease.

D.2. **Q-2-M POWER TRIM AND TILT**

System	MAIN ENGINE	**SUB SYSTEM**	POWER TILT AND TRIM
Description	PT&T RESERVOIR LEVEL	**FREQUENCY**	**Quarterly**

Safety Precautions

- Observe standard safety precautions
- Perform in accordance with manufacturer's specifications

Tools, Parts, Materials, Test Equipment

- Rags
- Standard blade screwdriver
- OMS power tilt and trim fluid

Procedure

Step	Action
1	Cycle engine up and down five times.
2	Remove reservoir fill screw and check fluid level. Fluid should be at the fill hole.
3	If fluid is low, top off with power tilt and trim fluid.
4	Install reservoir screw and cycle engine twice to purge any air from the system.

NOTE

Ensure the boat is on a level surface if on a trailer.

D.3. **Q-3-M FUEL SYSTEM**

System	MAIN ENGINES	**SUB SYSTEM**	FUEL SYSTEM
Description	FUEL FILTER REPLACEMENT	**FREQUENCY**	**Quarterly**

Safety Precautions

- No smoking in the vicinity
- Observe standard safety precautions
- Perform in accordance with manufacturer's specifications

Tools, Parts, Materials, Test Equipment

- Rags
- Bucket
- Strap wrench
- Replacement filter

Procedure

Step	Action
1	Remove used filter from filter mount.
2	Check for presence of water in filter bowl.
3	Clean off gasket base.
4	Fill new filter with clean gasoline.
5	Apply a light coat of oil to the new gasket and install filter.
6	Using flushing collar, test run engine.

D.4. **Q-4-E LIGHTING SYSTEM**

System	ELECTRICAL	**SUB SYSTEM**	LIGHTING SYSTEM
Description	NAVIGATION LIGHT INSPECTION	**FREQUENCY**	**Quarterly**

Safety Precautions

- Observe standard safety precautions
- Perform in accordance with manufacturer's specifications

Tools, Parts, Materials, Test Equipment

- Standard screwdriver
- Fine emery cloth or wire brush
- "Electrical" silicone grease

Procedure

Step	Action
1	Secure power at battery switch.
2	Check one light at a time.
3	Remove light cover and inspect light contacts for corrosion.
4	Clean any corrosion with emery cloth or a wire brush.
5	Apply a light coat of electrical silicone grease to bulb contact points.
6	Inspect blue light for corrosion or visible damage.

D.5.

Q-5-M PROP SHAFT LUBRICATION

System	MAIN ENGINE	**SUB SYSTEM**	PROPULSION
Description	PROPELLER SHAFT LUBRICATION	**FREQUENCY**	**Quarterly**

Safety Precautions

- Observe standard safety precautions
- Perform in accordance with manufacturer's specifications

Tools, Parts, Materials, Test Equipment

- 1 1/8" socket and ratchet
- Needle nose pliers
- New cotter key
- Rags
- Water resistant red or white lithium grease or manufacturer specified grease.

Procedure

Step	Action
1	Disable engine by disconnecting battery cables.
2	Remove cotter key, retainer nut, and nylon spacer.
3	Remove propeller from shaft. Check for line on shaft.
4	Remove old grease from shaft.
5	Apply a coat of grease to the shaft.
6	Install propeller, nylon spacer, and retainer nut.
7	Torque nut to 10 ft/lbs.
8	Install new cotter key.
9	Connect battery cables

Note

If the cotter keyhole fails to line up after torqueing, tighten the nut until it does.

D.6. **Q-6-M SPARK PLUG RENEWAL**

System	MAIN ENGINE	**SUB SYSTEM**	IGNITION
Description	SPARK PLUG RENEWAL	**FREQUENCY**	**Quarterly**

Safety Precautions

- Observe standard safety precaution
- Perform in accordance with manufacturer's specifications

Tools, Parts, Materials, Test Equipment

- 13/16" socket and ratchet
- Gapping tool
- Spark plugs
- Rags
- "Never seize" compound

Procedure

Step	Action
1	Disable engine by disconnecting battery cables.
2	Remove engine cowl.
3	Remove old spark plugs from engine.
4	Check air gap on new spark plugs and apply a light coat of never seize compound to the threads.
5	Install spark plugs and torque to manufacturer's specifications.
6	Inspect and install spark plug wires.
7	Replace engine cowl.
8	Connect battery cables

D.7.

Q-7-M STARTER PINION GEAR LUBRICATION

System	MAIN ENGINE	**SUB SYSTEM**	STARTER MOTOR
Description	PINION GEAR LUBRICATION	**FREQUENCY**	**Quarterly**

Safety Precautions

- Observe standard safety precautions
- Perform in accordance with manufacturer's specifications

Tools, Parts, Materials, Test Equipment

- Grease
- Rags

Procedure

Step	Action
1	Disable engine by disconnecting battery cables.
2	Remove engine cowl.
3	Apply a light coat of grease to the starter pinion gear if accessible.
4	Replace engine cowl.
5	Connect battery cables

D.8.	**Q-8-E SUPPLY BATTERY INSPECTION**		
System	ELECTRICAL	**SUB SYSTEM**	SUPPLY BATTERIES
Description	SUPPLY BATTERY INSPECTION	**FREQUENCY**	**Quarterly**

Safety Precautions

- No smoking in the vicinity.
- Wear safety goggles.
- Wear rubber apron
- Observe standard safety precautions.
- Perform in accordance with manufacturer's specifications

Tools, Parts, Materials, Test Equipment

- Electrolyte hydrometer.
- Battery charger.
- Battery post cleaner and wire brush.
- Rags.
- Battery terminal puller.

Procedure

Step	Action
1	Remove batteries from the boat and place them on a piece of plywood on the ground
2	Clean battery posts and connections.
3	Place a slow charge on the battery for one hour.
4	After charging the battery, conduct a hydrometer test on each cell.
5	Reinstall the batteries back on the boat.

D.9. **Q-9-A HULL INSPECTION**

System	AUXILIARY	**SUB SYSTEM**	HULL
Description	HULL INSPECTION	**FREQUENCY**	**Quarterly**

Safety Precautions

- Observe standard safety precautions
- Perform in accordance with manufacturer's specifications

Tools, Parts, Materials, Test Equipment

- Flashlight
- Rags

Procedure

Step	Action
1	Do a complete visual inspection of the hull. Look for cracks, loose bolts, deformities, and damaged parts in the following areas: • Forward gear box • Helmsman control box • Engine mounts and engines • Seat/gear box • Rigid hull and sponsons • Transom bilge • Cable channel • Inspect welds on radar/towing frame and accessories

D.10. **Q-10-A BRAKE AND BEARING INSPECTION**

System	AUXILIARY	**SUB SYSTEM**	BOAT TRAILER
Description	BRAKE AND BEARING INSPECTION	**FREQUENCY**	**Quarterly**

Safety Precautions

- Observe standard safety precautions
- Perform in accordance with manufacturer's specifications

Tools, Parts, Materials, Test Equipment

- Tools as required
- Floor jack and stands
- Marine wheel bearing grease
- Rags

Procedure

Step	Action
1	The boat must be off the trailer to perform this maintenance.
2	Remove the tires.
3	Remove the drums.
4	Inspect brakes, bearings, and drums for wear and deformities.
5	Replace any worn parts.
6	Repack wheel bearings.
7	Install drums and tires.
8	Check brake fluid in the reservoir.
9	Inspect all brake lines for corrosion, cracks, and loose nuts.

D.6. **Q-11-M SPARK PLUG RENEWAL**

System	MAIN ENGINE	**SUB SYSTEM**	IGNITION
Description	KILL SWITCH TESTING	**FREQUENCY**	**Quarterly**

Safety Precautions

Tools, Parts, Materials, Test Equipment

Procedure

Step	Action
1	Start Engine(s)
2	Remove kill switch lanyards for each engine individually
3	Check for wear and cracking in u-ring attachment points.
4	Re-attach kill switch lanyards.

Section E Semi-Annual Maintenance

Introduction Semi-Annual maintenance.

In this section This section contains the following information:

Topic	See Page
Engine Temperature Check	D-32
Steering System	D-33

E.1.

S-1-M ENGINE TEMPERATURE CHECK

System	MAIN ENGINE	**SUB SYSTEM**	COOLING SYSTEM
Description	ENGINE TEMPERATURE CHECK	**FREQUENCY**	**Semi-annual**

Safety Precautions

- Observe standard safety precautions
- Perform in accordance with manufacturer's specifications

Tools, Parts, Materials, Test Equipment

- THERMOMELT STIXS:

T-125 125 F
T-163 163 F

Procedure

Step	Action
1	Conduct engine temperature check according to manufacturer's instructions.

E.2.

S-2-A STEERING SYSTEM

System	AUXILIARY	**SUB SYSTEM**	STEERING SYSTEM
Description	STEERING SYSTEM INSPECTION	**FREQUENCY**	**Semi-annual**

Safety Precautions

- Wear eye protection while under the console
- Observe standard safety precautions
- Perform in accordance with manufacturer's specifications

Tools, Parts, Materials, Test Equipment

- Wrench set
- Power steering and tilt/trim fluid
- Rags
- Flashlight

Procedure

Step	Action
1	Inspect steering wheel for cracks, looseness, or any other deformities.
2	Inspect steering control inside helm box for leaks or loose hydraulic lines.
3	Inspect the hose that runs down the cable channel for kinks, abrasions, cuts, or any other deformities
4	Inspect the steering ram and all other steering components for damage, wear, and loose bolts.
5	Insure reservoir is within 1/2" from the top of the threads.
6	Turn the wheel in both directions several times to insure smooth operation.
7	Inspect tie bar for loose fittings, wear, and deformities.

Section F Annual Maintenance

Introduction Annual maintenance.

In this section This section contains the following information:

Topic	See Page
Lube Oil Supply	D-36
Synchronization and Linkage	D-37
Water Pump Inspection	D-38

F.1. **A-1-A LUBE OIL SUPPLY**

System	MAIN ENGINES	**SUB SYSTEM**	LUBE OIL SUPPLY
Description	REMOTE OIL TANK FILTER	**FREQUENCY**	**Annual**

Safety Precautions

- Observe standard safety precautions
- Perform in accordance with manufacturer's specifications

Tools, Parts, Materials, Test Equipment

- Rags
- TORX screwdriver
- Replacement filter

Procedure

Step	Action
1	Remove oil pick-up tube from tank.
2	Remove old filter.
3	Install new filter.
4	Re-install oil pick-up tube into tank.
5	Remove oil supply tube from remote tank.
6	Squeeze primer bulb until all air has been purged from the tube.
7	While still pumping oil out of the tube, install the tube on the engine.
8	Wipe up any spilled oil.

F.2.

A-2-M SYNCHRONIZATION AND LINKAGE

System	MAIN ENGINES	**SUB SYSTEM**	MAIN ENGINES
Description	MAIN ENGINE SYNC AND LINK	**FREQUENCY**	**Annual**

Safety Precautions

- Observe standard safety precautions
- Perform in accordance with manufacturer's specifications

Tools, Parts, Materials, Test Equipment

Procedure

Step	Action
1	Perform adjustments according to manufacturer's instructions.

F.3.

A-1-M WATER PUMP INSPECTION

System	MAIN ENGINES	**SUB SYSTEM**	WATER PUMP
Description	WATER PUMP INSPECTION	**FREQUENCY**	**Semi-annual**

Safety Precautions

- Disable engine by disconnecting battery cables.
- Observe standard safety precautions.
- Perform in accordance with manufacturer's specifications

Tools, Parts, Materials, Test Equipment

- Tools-as specified in manufacturer's instructions
- Rags
- Grease

Procedure

Step	Action
1	Remove outboard lower unit according to manufacturer's instructions.
2	Remove and inspect water pump according to manufacturer's instructions.
3	Re-assemble all parts and renew all gaskets.
4	Connect battery cables
5	Install lower unit and test.

Appendix E.
Vehicle – Trailer Matching Checklist

Overview

Introduction

This appendix is meant to help the unit match an appropriate vehicle to a specific towing mission.

NOTE

When obtaining weights, units should ensure that vehicles have a "normal" load in them. If a crew of four normally deploys and carries gear with them, then ALL weights should be obtained with the same people in vehicle with the same gear.

In this section

This section includes the following information:

Topic	See Page
Trailer–Truck–Hitch Matching Guide	E-3
Self Check for Compatibility and Safety	E-7

Trailer-Truck-Hitch Matching Checklist

Trailer

1. _____ **GROSS TRAILER WEIGHT (GTW):** Obtained from trailer, boat and normal "load" sitting detached from tow vehicle on scales. Boats should be at full fuel level and loaded with whatever gear is normally onboard during trailering operations.

2. _____ **TRAILER TONGUE WEIGHT (TTW):** This is usually obtained from detaching the trailer with normal load from the tow vehicle and weighing only the weight produced by the jack stand or nose-wheel. It is important to have the trailer adjusted to the height that it would be towed at.

Tow Vehicle

3. _____ **BASE CURB WEIGHT (BCW):** This is the weight of the vehicle with fuel and no passengers or cargo. This number can be obtained from the vehicle owner's manual or the manufacturer.

4. _____ **GROSS VEHICLE WEIGHT (GVW):** This is the Base Curb Weight (BCW) plus the weight of any passengers and cargo. To obtain this weight, detach the trailer from the tow vehicle and weigh the vehicle with the passengers and cargo onboard.

5. _____ **GROSS AXLE WEIGHT – FRONT (FRONT GAW):** This is the total weight placed on the front axle. To determine your FRONT GAW, drive your vehicle to a scale and with the trailer attached park only the front wheels of the tow vehicle on the scale. This is your FRONT GAW.

6. _____ **GROSS AXLE WEIGHT RATING – FRONT (FRONT GAWR):** This is the total weight the front axle is capable of carrying. This information is printed on the safety placard located on the driver's door.

Tow Vehicle (cont.)

7. _____ **GROSS AXLE WEIGHT REAR (REAR GAW):** This is the total weight placed on the rear axle during towing operations. To obtain the REAR GAW place all four wheels of the tow vehicle leaving the trailer wheels off of the scale. From this number, subtract your FRONT GAW. This is your REAR GAW.

8. _____ **GROSS AXLE WEIGHT RATING – REAR (REAR GAWR):** This is the total weight the rear axle is capable of carrying. This information is printed on the safety placard located on the driver's door.

9. _____ **GROSS VEHICLE WEIGHT RATING (GVWR):** This is the maximum allowable weight of the fully loaded vehicle.

10. _____ **GROSS COMBINATION WEIGHT (GCW):** This is the weight of the towing vehicle and fully loaded trailer, including passengers and any cargo.

11. _____ **GROSS COMBINATION WEIGHT RATING (GCWR):** This is the maximum allowable weight of the towing vehicle and fully loaded trailer, including passengers and any cargo. This number is typically found in the owner's manual or through your local dealer.

12. _____ **MAXIMUM TRAILER TOWING RATING (MTTR):** Maximum amount the vehicle is designed to tow. This number is typically found in the owner's manual or through the manufacturer's representative..

Hitch System

13. _____ **HITCH CAPACITY (HC):** This is the weight that the hitch is designed to safely tow. This information is typically found on a plate attached to the hitch frame.

14. _____ **TOW BALL RATING (TBR):** This is the weight that the towing ball is designed to safely handle. It is typically stamped onto the top of the ball.

Hitch System (cont.)

15. _____ **TONGUE WEIGHT RATING (TWR)**: This is the weight that the hitch system is designed to safely support. This number is typically stamped on the hitch frame.

16. _____ **DRAW BAR TONGUE RATING (DBTR)**: This is the tongue weight that the draw bar is designed to safely carry. This is typically found stamped on the top of the draw bar.

Self Check for Compatibility and Safety

Self Check

1. _____ Is line 1 (GTW) less than line 12 (MTTR)? If no, then you are towing more weight than your vehicle is designed to safely tow.

2. _____ Is line 2 (TTW) 10-15% of line 1 (GVTW)? If no, then you may have an improperly loaded trailer or a boat on the wrong trailer.

3. _____ Is line 5 (FRONT GAW) less than line 6 (FRONT GAWR)? If no, you are overloading your front axle of the tow vehicle.

4. _____ Is line 7 (REAR GAW) less than line 8 (REAR GAWR)? If no, you are overloading your rear axle. A possible cause is too great of a tongue weight from your trailer. (See question 2).

5. _____ Is line 10 (GCW) less than line 11 (GCWR)? If no, the combination of your vehicle and trailer are greater than was intended by the tow vehicle manufacturer. Some possible remedies are to increase the size of the tow vehicle to one with a higher GCWR, or lower the GCW by removing gear or passengers

6. _____ Is line 1 (GTW) less than line 13 (HC)? If no, you are towing more weight than you hitch is designed to carry.

7. _____ Is line 1 (GTW) less than line 14 (TBR)? If no, than you are towing more weight than your tow ball is rating to tow. You will need to upgrade either your tow ball or the entire hitch system (See question 6).

8. _____ Is line 2 (TTW) less than line 15 (TWR)? If no, you are exerting too much downward pressure on your hitch system. You will need to upgrade your hitch system to one which has a higher TWR.

Self Check (cont.)

9. _____ Is line 2 (TTW) less than line 16 (DBTR)? If no, your draw bar is not rated for the tongue weight you are exerting on it. You will need to upgrade your draw bar and/or your hitch system.

WARNING These calculations do not take into every possible scenario. Unit commanders may want to build a certain safety factor into their calculations. For example, some unit commanders may dictate that they will only tow loads that are less than 80% of the capability of the tow vehicle and hitch components.

Appendix F Unit Type Specific Form

Overview

While there are Operator's Handbooks that address platform specific issues for Standard Boats, this manual is the only handbook that exists for non-standard boats. It has been written to cover the most common NSBs employed in the Coast Guard fleet. It is important that units are aware of any boat specific or model specific characteristics of their boat.

Introduction

Units may enter boat specific data about their non-standard boats on this form. Copies of the blank form should be made if the unit has more than one non-standard boat.

Boat Specific Data Sheet

Boat number:	
Manufacturer:	
Model:	
Year:	
Length above waterline: (Including fendering, not including O/Bs)	
Beam (permanent):	
Sponson material:	
Operational Draft, normal load, engines down:	
Approx. hoisting weight: (Fuel and engines, + 175lbs of crew)	
Maximum number of passengers:	
Estimated turning radius:	
Type of propulsion normally employed:	
Minimum planing HP:	
Minimum planing speed:	
Maximum HP:	
Maximum speed:	
Normal fuel capacity:	
Auxiliary fuel capacity:	
Range:	
Most common mission:	
Comments:	