MULTISERVICE HELICOPTER SLING LOAD:

DUAL-POINT LOAD RIGGING PROCEDURES

DISTRIBUTION RESTRICTION: APPROVED FOR PUBLIC RELEASE; DISTRIBUTION IS UNLIMITED

MARINE CORPS PCN: 14400007200

HEADQUARTERS
DEPARTMENT OF THE ARMY
UNITED STATES MARINE CORPS
DEPARTMENT OF THE NAVY
DEPARTMENT OF THE AIR FORCE
UNITED STATES COAST GUARD

C2, FM 10-450-5
HEADQUARTERS
DEPARTMENT OF THE ARMY
UNITED STATES MARINE CORPS
DEPARTMENT OF THE NAVY
DEPARTMENT OF THE AIR FORCE
UNITED STATES COAST GUARD

Change 2 Washington, DC, 1 April, 2002

MULTISERVICE HELICOPTER SLING LOAD: DUAL-POINT RIGGING PROCEDURES

1. This change adds several items that are certified for sling load in the dual-point configuration.

2. The United States Marine Corps has changed the Short Title of this manual to MCRP 4-11.3E, Vol III. This Short Title will be included in the next revision of this manual.

3. Change FM 10-450-5, 30 August 1999, as follows:

Remove old pages	**Insert new pages**
iii through ix	iii through ix
2-1 through 2-6	2-1 through 2-6
2-17 through 2-22	2-17 through 2-22
	2-53.5 through 2-53.8
2-67 through 2-70	2-67 through 2-70
	2-85 through 2-97
3-1 and 3-2	3-1 and 3-2
3-19 and 3-20	3-19 and 3-20
3-35	3-35 through 3-39
5-1 and 5-2	5-1 and 5-2
	5-59 through 5-61
9-1and 9-2	9-1and 9-2
	9-7 and 9-8
13-1 and 13-2	13-1 and 13-2
	13-9 and 13-10
Glossary 1 and Glossary 2	Glossary 1 and Glossary 2

4. New or changed material is identified by a vertical bar in the margin opposite the changed material.

5. File this transmittal sheet in the front of the publication.

DISTRIBUTION RESTRICTION: Approved for public release; distribution is unlimited

HEADQUARTERS
DEPARTMENT OF THE ARMY
UNITED STATES MARINE CORPS
DEPARTMENT OF THE NAVY
DEPARTMENT OF THE AIR FORCE
UNITED STATES COAST GUARD

Change 1 Washington, DC, 20 August 2001

MULTISERVICE HELICOPTER SLING LOAD: DUAL-POINT RIGGING PROCEDURES

1. This change adds several items that are certified for sling load in the dual-point configuration.

2. The United States Marine Corps has changed the Short Title of this manual to MCRP 4-11.3E, Vol III. This Short Title will be included in the next revision of this manual.

3. Change FM 10-450-5, 30 August 1999, as follows:

Remove old pages	**Insert new pages**
iii through ix	iii through ix
1-1 through 1-4	1-1 through 1-4
2-1 and 2-2	2-1 and 2-2
2-13 through 2-20	2-13 through 2-20
	2-20.1 through 2-20.3
2-45 through 2-50	2-45 through 2-50
2-53 through 2-56	2-53 through 2-56
2-73	2-73 through 2-84
3-1 and 3-2	3-1 and 3-2
3-29	3-29 through 3-35
5-1 and 5-2	5-1 and 5-2
5-29 through 5-32	5-29 through 5-32
5-55	5-55 through 5-58
7-1 and 7-2	7-1 and 7-2
7-29	7-29 through 7-32
8-1 and 8-2	8-1 and 8-2
8-57 through 8-60	8-57 through 8-60
	8-73 and 8-74
10-11 and 10-12	10-11 and 10-12
11-5 through 11-10	11-5 through 11-10
Glossary 1 and Glossary 2	Glossary 1 and Glossary 2

4. New or changed material is identified by a vertical bar in the margin opposite the changed material.

5. File this transmittal sheet in the front of the publication.

DISTRIBUTION RESTRICTION: Approved for public release; distribution is unlimited

FIELD MANUAL 10-450-5
MARINE CORPS REFERENCE PUBLICATION 4-23E, VOL III
NAVAL WARFARE PUBLICATION 3-04.13
AIR FORCE JOINT MANUAL 11-223, VOL III
COMMANDANT INSTRUCTIONS M13482.4A

HEADQUARTERS
DEPARTMENT OF THE ARMY
UNITED STATES MARINE CORPS
DEPARTMENT OF THE NAVY
DEPARTMENT OF THE AIR FORCE
UNITED STATES COAST GUARD
Washington, DC, 30 AUGUST 1999

MULTISERVICE HELICOPTER SLING LOAD: DUAL-POINT LOAD RIGGING PROCEDURES

PREFACE

This manual is one of a series of manuals for aviation and ground personnel who perform helicopter sling load missions ashore or aboard ship. Other manuals in this series are FM 10-450-3/MCRP 4-23E, VOL I/NWP 3-04.11/ AFJMAN 11-223, VOL I/COMDTINST M13482.2A and FM 10-450-4/MCRP 4-23E, VOL II/NWP 3-04.12/AFJMAN 11-223, VOL II/COMDTINST M13482.3A.

These manuals are a coordinated effort of the US Army, US Marine Corps, US Navy, US Air Force, and US Coast Guard. All services participate in the sling load certification program begun by the Army in 1984. These manuals include standardized rigging procedures and other information from that program. Chapters 2 through 13 contain rigging procedures for dual-point loads which have been certified for sling load. Chapter 14 contains rigging procedures which have not been certified but have demonstrated acceptable static lift and flight characteristics during a flight test.

Efforts were made to standardize ground crew and hookup procedures and terminology. Where service-unique requirements apply to an entire chapter or body of text, the service initials are at the beginning of the chapter or text. Otherwise the initials are at the end of the applicable sentence.

Rigging equipment and procedures described in this manual may not be authorized for all aircraft or services because of equipment or service restrictions.

DISTRIBUTION RESTRICTION: Approved for public release; distribution is unlimited.

*This publication supersedes FM 55-450-5, 11 February 1991.

MARINE CORPS PCN: 14400007200

The proponent of this publication is HQ TRADOC. Recommendations for changes or improvement to the manual are requested.

Army personnel submit DA Form 2028 (Recommended Changes to Publications and Blank Forms) to:

Aerial Delivery and Field Services Department
USA Quartermaster Center and School
ATTN: ADMMO
1010 Shop Road
Fort Lee, VA 23801-1502

Navy personnel submit recommended changes to:

Chief of Naval Operations
Code OP 506
Washington, DC 20350-2000

Marine Corps personnel submit user suggestion form to:

Commanding General
Marine Corps Combat Development Command
Doctrine Division C42
Quantico, VA 22134-5021

With a copy to:

Commanding General
Marine Corps Systems Command (PSE)
Quantico, VA 22134-5021

Air Force personnel submit AF Form 847 (Recommendation for Change of Publication) to:

HQ AFSOC/DOXT
Hurlburt Field, FL 32544-5273

Coast Guard personnel submit rapidraft letter (CG-3883) or AF Form 847 to:

Commandant (G-OAV)
US Coast Guard
2100 2nd Street SW
Washington, DC 20593

With a copy to:

Commander
Aviation Training Center (TRADIV)
Mobile, AL 36117

TABLE OF CONTENTS

		Paragraph	Page
PREFACE			i
CHAPTER 1	FUNDAMENTAL PRINCIPLES		
	Introduction	1-1	1-1
	Classification Definitions of Sling Loads	1-2	1-1
	Certification of Equipment for Helicopter Sling Load	1-3	1-1
	Requests for Sling Load Certification	1-4	1-2
	Unique Items of Equipment or Operational Requirements	1-5	1-2
	Equipment Rigging Procedures	1-6	1-2
	General Rigging Instructions	1-7	1-3
CHAPTER 2	CERTIFIED DUAL-POINT RIGGING PROCEDURES FOR WHEELED VEHICLES		
	Introduction	2-1	2-1
	M996/M997/M997A2 Truck, Ambulance (HMMWV)	2-2	2-1
	M996/M1036/M1045/M1045A2/M1046 TOW Missile Carrier (HMMWV), M1025/M1025A2/M1026/M1043/M1043A2/M1044 Armament Carrier (HMMWV), M1114 Up-Armored HMMWV	2-3	2-4
	M998/M1037 Modified (GVW 9,400 lbs)/M1038/M1097/M1097A2 Truck, Cargo,1 1/4-ton (HMMWV)	2-4	2-7
	M1037 Shelter Carrier (HMMWV) With S-250 or S-250E Shelter	2-5	2-10
	M1097 Shelter Carrier, Heavy HMMWV, With S-250 or S-250E Shelter	2-6	2-14
	M1097/M1097A2 Shelter Carrier (HMMWV) With Lightweight Multipurpose Shelter (LMS)(USMC)	2-7	2-17
	M1097/M1097A2 Shelter Carrier (HMMWV) With Lightweight Multipurpose Shelter (LMS)	2-7.1	2-20
	M1113 Truck, Utility, Expanded Capacity (HMMWV) With Lightweight Multipurpose Shelter (LMS) Using Shelter Lift Rings as Sling Guides	2-7.2	2-20.4
	M1037/M1042 Shelter Carrier (HMMWV) With Lightweight Multipurpose Shelter (LMS)	2-8	2-21
	M1097/M1113 Shelter Carrier (HMMWV) With Gitchner Model 1497A Shelter	2-9	2-23
	M1037/M1097 Shelter Carrier (HMMWV) With G15840 Smoke Generator Set, M157/M157A1E1	2-10	2-26
	M998 (HMMWV) With Two MRC-127 Stacks	2-11	2-28
	M998/M1038 (HMMWV) With Lightweight Tactical Fire Control Systems (LTACFIRE)/Tactical Terminal Control System (TTCS)	2-12	2-30
	M1037 (HMMWV) With AN/TPQ-36 Firefinder Generator Pallet	2-13	2-32
	M1097 (H-HMMWV) With High Mobility Digital Group Multiplexer (DGM) Auxiliary Equipment Transportation Container (AETC) in 2 and 3 Mast Configurations	2-14	2-34

	Paragraph	Page
M1097 (H-HMMWV) With Contact Maintenance Truck, Heavy	2-15	2-36
M998 HMMWV With Man Portable Air Defense System (MANPADS)	2-16	2-38
M1097 (H-HMMWV) With AN/TPQ-42 Meteorological Hydrogen Generator (MHG)	2-17	2-40
M1097 (H-HMMWV) With Enhanced Fiber Optic Guided Missile (EFOGM) Launcher	2-18	2-42
M1097A2 (H-HMMWV) With the Secure Mobile Anti-Jam Tactical Terminal (SMART-T)	2-19	2-44
Dual HMMWVs, Side by Side (Shotgun Method)	2-20	2-46
Medium Tactical Vehicles M1083/M1083A1/M1084/M1085/M1086/ M1090/M1090A1/M1093/M1094	2-21	2-50
Light Medium Tactical Vehicles M1078/M1078A1/M1079A1/ M1081	2-21.1	2-53.1
Light Medium Tactical Vehicles (LMTV) M1078/M1078A1/M1081/ With Type III Cargo Bed Cover and Medium Tactical Vehicles (MTV) M1083/M1083A1/M1093 With Type IV Cargo Bed Cover	2-21.2	2-53.5
Medium Tactical Vehicle, Tractor, M1088/M1088A1	2-22	2-54
Light Armored Vehicle (LAV) (USMC)	2-23	2-57
Truck, Cargo, 5-ton, M813A1/M923/M925	2-24	2-59
Truck, Cargo, 2 1/2-ton, M35A2 Modified, Part of an AN/MPQ-49A Forward Area Alerting Radar (FAAR) System	2-25	2-61
Front Power Unit, MK48	2-26	2-63
M1098 HMMWV with Remote Landing Site Tower (RLST)	2-27	2-65
M1097A1 (H-HMMWV) with FiberglassCargo Bed Cover (CBC)	2-28	2-67
M56 Smoke Generating System on M1113 (HMMWV)	2-29	2-70
M35A3 2 1/2-Ton Cargo Truck	2-30	2-72
M1097A2 (HMMWV) Soft Top Truck With Advanced Field Artillery Tactical Data Systems (AFATADS)	2-31	2-74
M1037 (HMMWV) With Compressed Air-Foam System, Mobile (CAFSM)	2-32	2-77
Interim Fast Attack Vehicle (IFAV) Truck, Long Wheel Base	2-33	2-79
Dual Interim Fast Attack Vehicle (IFAV) Trucks , Long Wheel Base, Side by Side (Shotgun Method)	2-34	2-81
M1097A2 Shelter Carrier (HMMWV) With Special Operations Media (SOMS-B) in S-788G Shelter (LMS)	2-35	2-85
Prophet AN/MLQ-40 (V) on M1097 HMMWV	2-36	2-88
M998 Truck, Cargo, 1 1/4-Ton (HMMWV) With AMTECH Helmet Hardtop	2-37	2-90
Dual HMMWV, Side by Side (Shotgun Method), With AMTECH Helmet Hardtop Basic	2-38	2-92
Helmet Hardtop (AMTECH) Cargo Bed Cover on M1097A2 HMMWV	2-39	2-96

		Paragraph	Page
CHAPTER 3	**CERTIFIED DUAL-POINT RIGGING PROCEDURES FOR TRAILERS**		
	Introduction	3-1	3-1
	M101A2 3/4-Ton Trailer	3-2	3-1
	M1048 Trailer with Tracked Suspension System (TSS)	3-3	3-4
	M989 Heavy-Expanded Mobility Ammunition Trailer (HEMAT)	3-4	3-6
	M989A1 Heavy-Expanded Mobility Ammunition Trailer (HEMAT II)	3-5	3-8
	Mk14, Trailer, Container Hauler	3-6	3-10
	Mk15, Trailer, Wrecker/Recovery	3-7	3-12
	Mk16, Trailer, Fifth-Wheel Adapter	3-8	3-14
	Mk17, Trailer, Drop-Side, Cargo	3-9	3-16
	M871A1 Semitrailer	3-10	3-18
	High Mobility Trailers (HMT) M1101/M1102	3-11	3-20
	High Mobility Trailers (HMT) with Generator for Joint Surveillance Target Attack Radar (JSTAR) System	3-12	3-22
	High Mobility Trailer-Light (HMT), M1101 with AN/TSQ-198 Tactical Terminal Control System (TTCS)	3-13	3-24
	Special Operations Media Systems (SOMS B) on Commander's Crash-Out-Package System (COPS) Trailer	3-14	3-26
	Deployable Print Production Center (DPPC) on COPS Trailer	3-15	3-28
	XM1112 400 Gallon Water Trailer	3-16	3-30
	M105A3 Trailer	3-17	3-32
	M1082 Light Medium Tactical Vehicle (LMTV) and M1095 Medium Tactical Vehicle (MTV) Trailers	3-18	3-34
	Assault Command Post With High Mobility Wheel Set	3-19	3-36
	Containerized Kitchen Mounted on the Containerized Kitchen Trailer	3-20	3-38
CHAPTER 4	**CERTIFIED DUAL-POINT RIGGING PROCEDURES FOR TRAILERS WITH MOUNTED GENERATORS**		
	Introduction	4-1	4-1
	M116A2 Trailer-Mounted Power Units, Generators, and Power Plants	4-2	4-1
	M353 Trailer Chassis With Mounted Generators	4-3	4-4
	M200A1 Trailer-Mounted Power Units, Generators, and Power Plants	4-4	4-6
	High Mobility Trailer with AN/MJQ-35A Power Unit	4-5	4-8
	Aviation Ground Power Unit	4-6	4-10
CHAPTER 5	**CERTIFIED DUAL-POINT RIGGING PROCEDURES FOR TANDEM LOADS**		
	Introduction	5-1	5-1
	M998/M1038 Truck, Utility, 1 1/4-Ton (HMMWV) with M101A1/A2 Trailer, Cargo	5-2	5-1
	M1037 Shelter Carrier (HMMWV) with M101A2 Trailer , Cargo	5-3	5-5
	M1037 Shelter Carrier (HMMWV) with S-250/S-250E Shelter and M116A2 Trailer Mounted Generator, PU-751/PU-753/PU-620/M	5-4	5-9

	Paragraph	Page
M998/M1038 Truck, Utility, 1 1/4-Ton (HMMWV) and G-85/TPQ-36 (V)7 Generator Group on M116A2 Modified Trailer	5-5	5-13
M1097 Truck, Utility, 1 1/4-Ton (HMMWV) with Pallet Group OA-9134/TSC, Antenna AS-3036/TSC and PU-753 Generator Set on M116A2 Trailer	5-6	5-16
M1097 Shelter Carrier, 1 1/4-Ton (HMMWV) with AN/TPQ-36(V)7, (S-250 Shelter), Operations Control Group and Radar Set Antenna Mounted on M116A2 Trailer	5-7	5-20
M1097, 1 1/4-Ton (HMMWV) with Generator Pallet Group, G-86-TPQ-36 (V)7 and Radar Set Antenna Mounted on M116A2 Trailer	5-8	5-23
M1037 Shelter Carrier, 1 1/4-Ton (HMMWV) with AN/TPQ-36, (S-250 Shelter), Operations Control Group and Radar Set Antenna Mounted on M103A1 Trailer	5-9	5-26
M1097 Shelter Carrier (HMMWV) with S-250 Shelter and Trailer Generator Sets on M116A2 Trailer	5-10	5-29
M1097 (HMMWV) with AN/TSQ-183, Counter Battery Radar and MEP802A Generator on M116A3 Trailer	5-11	5-32
M1097 (HMMWV) with AN/TSQ-183, Counter Battery Radar and M101A2 Trailer	5-12	5-35
Joint Surveillance Target Attack Radar (JSTAR) System, M1097 (HMMWV) Mission Vehicle with LMS Shelter and Mission Trailer, HMT with Generator	5-13	5-38
M1097 Shelter Carrier, 1 1/4-Ton (HMMWV) with AN/TPQ-36(V)7, (S-250 Shelter), Operations Control Group, OKG-398/TPW, and M116A2 Equipment Trailer Group	5-14	5-41
M998/M1038, 1 1/4-Ton Truck, Cargo (HMMWV) and M167 Gun (Vulcan)	5-15	5-44
M998/M1038, 1 1/4-Ton Truck, Cargo (HMMWV) and M102, 105-mm Howitzer	5-16	5-47
M1037/M1097 Truck, Utility, 1 1/4-Ton (HMMWV) and M119, 105-mm Howitzer	5-17	5-50
M1097 Truck, Utility, 1 1/4-Ton (HMMWV) with AN/TPQ-64 Tactical Quiet Generator (TQG) and High Mobility Trailer (HMT) with Sentinel Antenna Transceiver Group (ATG)	5-18	5-53
M1097, 1 1/4- Ton (HMMWV) With Generator Pallet Group and PU 799 G-85/TPQ-36 Generator Group on M116A3 Trailer	5-19	5-56
M1113 Shelter Carrier (HMMWV) with Digital Topographic Support System-Light (DTSS-L), AN/TYQ-67 (V)1 in LMS Shelter and PU-798 Generator on M116A3 Trailer	5-20	5-59

CHAPTER 6 CERTIFIED DUAL-POINT RIGGING PROCEDURES FOR HOWITZERS AND WEAPONS SYSTEMS

Introduction	6-1	6-1
M101A1 Howitzer, 105-mm, with or without A-22 Cargo Bags	6-2	6-1
Two M101A1 Howitzers, Side by Side (USMC)	6-3	6-4
M102 Howitzer, 105-mm	6-4	6-7
Two M102 Howitzers, 105-mm, with or without One, Two, or Three A-22 Cargo Bags	6-5	6-9

		Paragraph	Page
	M198, Howitzer, 155-mm, Towed with External Airlift Travel Lock Assembly	6-6	6-12
	M167 20-mm AA Gun (Vulcan)	6-7	6-14
CHAPTER 7	**CERTIFIED DUAL-POINT RIGGING PROCEDURES FOR GUIDED MISSILE SYSTEMS**		
	Introduction	7-1	7-1
	M54A1/M54A2 Chaparral Launch Station	7-2	7-1
	Pedestal-Mounted Stinger (Avenger)	7-3	7-3
	AN/MPQ-57 and AN/MPQ-61 High Power Illuminator Radar (HIPIR) Phase II and Phase III Mounted on the M390 (Modified) Trailer	7-4	7-6
	HAWK Missile Launcher with or without Missiles	7-5	7-9
	HAWK Missile Launcher with Missiles (Offset Configuration)	7-6	7-11
	M192-1 HAWK Zero Length Missile Launcher (USMC)	7-7	7-14
	M501E3 Guided Missile Loader-Transporter	7-8	7-16
	XM1E2 Loading and Storage Pallet	7-9	7-18
	Platoon Support Van/Maintenance Center (PSV/MC)	7-10	7-21
	Field Maintenance Equipment Shops	7-11	7-23
	Field Maintenance Equipment Shop 21, Unmanned Shop Electrical Equipment	7-12	7-25
	Platoon Command Post (PCP)/Battery Command Post (BCP)	7-13	7-27
	Stinger, Pedestal-Mounted on M1097/M1097A1/M1097A2 HMMWV (Avenger) with ECU and PPU with or without Bustle Box Stowed on Roof	7-14	7-30
CHAPTER 8	**CERTIFIED DUAL-POINT RIGGING PROCEDURES FOR ENGINEER EQUIPMENT**		
	Introduction	8-1	8-1
	D5B Tractor, Dozer, Sectionalized	8-2	8-1
	Tractor, Full-Tracked, Case Model 1150	8-3	8-4
	Tractor, Full-Tracked, Case Model 1150E	8-4	8-6
	Tractor (Dozer), Full-Tracked, Type III, JD450G	8-5	8-8
	Tractor, Wheeled, Industrial, Case Model 580	8-6	8-10
	Small Emplacement Excavator (SEE)	8-7	8-12
	High Mobility Materiel Handler (HMMH)	8-8	8-14
	950BS Scoop Loader, Sectionalized	8-9	8-16
	130GS Grader, Sectionalized	8-10	8-20
	613BS Scraper, Elevating, Sectionalized	8-11	8-23
	613WDS Water Distributor, Sectionalized	8-12	8-25
	Roller, Towed, Vibrating	8-13	8-27
	Roller, Compactor, Vibrator	8-14	8-29
	Towed Rollers	8-15	8-31
	Mine Clearing Line Charge Mounted on M353 Trailer	8-16	8-33
	Mine Clearing Line Charge Mounted on M200A1 Trailer	8-17	8-35
	LRT-110, 7 1/2-Ton Crane	8-18	8-37

	Paragraph	Page
LRT-110, 7 1/2-Ton Crane (Boom)	8-19	8-39
LRT-110, 7 1/2-Ton Crane (Power Unit)	8-20	8-41
SP-7 Wheel Mounted Crane	8-21	8-43
Truck, Forklift, MC-4000	8-22	8-45
Truck, Forklift, RT-4000 (USMC)	8-23	8-47
Truck, Forklift, MC-6000	8-24	8-49
Extendable Boom Forklift (USMC)	8-25	8-51
Boat, Bridge Erection	8-26	8-53
Ribbon Bridge Erection Boat, MK2	8-27	8-55
Ribbon Bridge, Interior Bay	8-28	8-57
Ribbon Bridge, Ramp Bay	8-29	8-59
Medium Girder Bridge (USMC)	8-30	8-61
Pneumatic Tool and Compressor Outfit/Hydraulic Pioneer Tool Outfit (PTO) on M353 Trailer	8-31	8-63
35-Foot Riverine Assault Craft (RAC) With or Without Trailer	8-32	8-65
Water Purification Unit-Reverse Osmosis (ROWPU)	8-33	8-67
Water Purification Unit-Reverse Osmosis (ROWPU), Trailer Mounted	8-34	8-69
Inland Petroleum Distribution System (IPDS), Mainline Pump on 20-Foot Flatrack	8-35	8-71
Vibrating Roller, Caterpillar, RO-33	8-36	8-73

CHAPTER 9 CERTIFIED DUAL-POINT RIGGING PROCEDURES FOR LIQUID CONTAINERS

Introduction	9-1	9-1
Two Storage Modules, Fuel/Water, (Side by Side)	9-2	9-1
Three Storage Modules, Fuel/Water, (Side by Side)	9-3	9-4
Five 500-Gallon Fuel Drums	9-4	9-7

CHAPTER 10 CERTIFIED DUAL-POINT RIGGING PROCEDURES FOR SHELTERS

Introduction	10-1	10-1
Communications or Electronic Systems Housed in S-250 Shelters	10-2	10-1
Communications or Electronic Systems Housed in Lightweight Multipurpose Shelter (LMS)	10-3	10-3
Communications or Electronic Systems Housed in S-280 Shelters	10-4	10-5
8- x 8- x 10-Foot Shelters	10-5	10-8
8- x 8- x 20-Foot Shelters	10-6	10-10
AN/TYC-5A Data Communications Terminal	10-7	10-14
Shelter, Knockdown,8- x 8- x 20-Foot	10-8	10-16
Jam-Resistant Secure Communications (JRSC) Satellite Communications Terminal with Mobilizer	10-9	10-18
Downsized Digital Group Multiplexer (DGM) Assemblages	10-10	10-20
NATO Air Base Satcom (NABS) Shelter Pallet, AN/TSC-93B (V) 2	10-11	10-22
Trojan Air Transportable Electronic Reconnaissance System (TATERS) High Gain Antenna Group (HGAG) Shelter	10-12	10-24

		Paragraph	Page
CHAPTER 11	**CERTIFIED DUAL-POINT RIGGING PROCEDURES FOR CONTAINERS**		
	Introduction	11-1	11-1
	Full-Up Power Pack (FUPP) Container, M1A1	11-2	11-1
	Tandem Lift of Two ISU-90 Shipping/Storage Containers	11-3	11-3
	Army Tactical Missile Systems Multiple Launch Rocket System or Guided Missile Launch Assembly, Two Containers	11-4	11-6
	Army Tactical Missile Systems Multiple Launch Rocket System or Guided Missile Launch Assembly, Four Containers	11-5	11-8
CHAPTER 12	**CERTIFIED DUAL-POINT RIGGING PROCEDURES FOR RADAR AND SATELLITE EQUIPMENT**		
	Introduction	12-1	12-1
	OE-361/G Quick Reaction Satellite Antenna	12-2	12-1
	NATO Airbase SATCOM (NABS) Power Pallet, AN/TSC-85B(V)2	12-3	12-3
	Digital Group Multiplexer (DGM), Digital Antenna Mast Program (DAMP), Pallet Trailer	12-4	12-5
	Lightweight Generator Frame Assembly (AN/TSC-93B Reconfiguration) Satellite Communications Terminal	12-5	12-7
CHAPTER 13	**CERTIFIED DUAL-POINT RIGGING PROCEDURES FOR MISCELLANEOUS EQUIPMENT**		
	Introduction	13-1	13-1
	Palletized Loading System (PLS), M1077 Flatrack, Loaded	13-2	13-1
	Palletized Loading System (PLS), M1077 Flatrack, Empty	13-3	13-3
	Enhanced Palletized Loading System, Flatrack, Loaded	13-4	13-5
	Enhanced Palletized Loading System, Flatrack, Empty	13-5	13-7
	Naval Special Warfare Ridgid Boat (NSWRIB) with or without Trailer	13-6	13-9
CHAPTER 14	**SUITABLE DUAL-POINT RIGGING PROCEDURES**		
	Introduction	14-1	14-1
	M35A1/A2 2 1/2-Ton Cargo Truck	14-2	14-1
	M149-Series Water Trailer	14-3	14-4
	M114A1 155-mm Howitzer	14-4	14-6
	One Conex Container	14-5	14-8
	One Milvan Container	14-6	14-10
APPENDIX A.	**NATIONAL STOCK NUMBERS FOR SLINGS, NETS, AND SPARE PARTS**		**A-1**
APPENDIX B.	**SLING CONVERSION CHART**		**B-1**
GLOSSARY			Glossary-1
REFERENCES			References-1

CHAPTER 1

FUNDAMENTAL PRINCIPLES

1-1. INTRODUCTION

This chapter contains general information about certification for helicopter sling load and explains the role of the Military Traffic Management Command Transportation Engineering Agency (MTMCTEA) and the Department of Defense (DOD) sling load certification authority. This authority rests with the US Army Soldier Systems Center (SSC). This chapter also explains the information contained in the equipment rigging procedures and gives some general rigging instructions.

1-2. CLASSIFICATION DEFINITIONS OF SLING LOADS

a. Certified Sling Loads. Certified sling loads are those items of equipment and their associated rigging procedures which have completed the evaluation and testing required by SSC for sling load certification. These rigging procedures are in Chapters 2 through 13. Only certified sling loads are authorized for the Marine Corps. The following restrictions apply for dual point sling load certification to remain in effect:

(1) The load must be within the lifting capability of the desired helicopter model.

(2) The load shall be rigged in accordance with the certified dual point rigging procedure.

(3) The recommended stable airspeed specified for the load in the applicability section of the rigging procedure is a recommendation and not a restriction, unless so stated.

(4) This certification does not apply to helicopters of different designations (for example, CH-47 versus CH-53E helicopter) because of possible differences in dynamic vibration, helicopter/load mass differential, and rotor wash pattern.

b. Suitable Sling Loads. Suitable sling loads are those items of equipment and their associated rigging procedures that have not been certified but have demonstrated acceptable static lift and flight characteristics. In most cases these loads were not pull tested in accordance with MIL STD 913, but are known loads which have been flown without incident for years and which SSC considers to be proven safe. These rigging procedures are in Chapter 14.

c. Unique Sling Loads. Unique loads are also equipment carried on a one time or low-frequency basis, such as telephone poles, artillery targets, or barrier material.The lack of sling load certification in itself does not preclude a unit commander from carrying a load that is not certified. Each service is responsible for determining its policy on carrying loads that have not been certified for sling load.

d. Prohibited Sling Loads. Prohibited sling loads are items of equipment that are prohibited from sling loading as determined by each service. These loads have been denied sling load certification and are a safety hazard if carried. They have either structural deficiencies or have exhibited unstable flight characteristics during flight testing. Each service will identify these loads and transmit this information by separate list. Contact your service point of contact identified in the Preface if you have any questions regarding the classification of a particular load.

1-3. CERTIFICATION OF EQUIPMENT FOR HELICOPTER SLING LOAD

a. Objective. The objective of helicopter sling load certification is to assure the user that the equipment being transported can withstand the stresses of a sling load flight environment. Certification for sling load assures the user that the item has met minimum standards for structural integrity and that the associated rigging procedures have been developed specifically for that item.

b. Responsibilities. Within the US Army, the MTMCTEA is responsible for transportability approval of developmental equipment. Within the DOD, SSC is the lead activity responsible for providing sling load certifica-

tion and rigging procedures for military equipment. When an item is certified for sling load, it means that SSC, in cooperation with various test activities, has:

(1) Conducted an engineering analysis of the load and lifting provisions for structural adequacy during sling loading.

(2) Verified that the lift provisions meet the strength requirements of the applicable military standard by means of proof load testing.

(3) Developed and/or validated sling load rigging procedures through static lift testing.

(4) Evaluated flight reports and determined that the particular load meets acceptable flight characteristics with the type helicopter flown during the flight test.

(5) Issued a statement of sling load certification for the particular load, including load configuration(s), weight(s), types of helicopter(s), and recommended airspeed(s) as attained during the flight evaluation(s). Certification is valid only for the conditions specified in the rigging procedures.

1-4. REQUESTS FOR SLING LOAD CERTIFICATION

a. Fielded Equipment. Each service headquarters must designate, request, and prioritize the fielded equipment to be evaluated by SSC for sling load certification. Individual units can request sling load certification for fielded equipment through the appropriate service agency which will add the item to the prioritized list. The SSC will evaluate the equipment on a priority basis. The following agencies are responsible for their branch of service:

(1) US Army - Commander, Combined Arms Support Command, ATTN: QM Combat Developments, Suite 250, 3901 A Avenue, Fort Lee, VA 23801-1809.

(2) US Marine Corps - Commanding General, Marine Corps System Command (PSE) Quantico, VA 22134-5021.

(3) US Navy - Naval Air Systems Command (NAVAIR).

(4) US Air Force - US Air Force Systems Command.

b. Previously Certified Single-Point Loads. Single point loads which have been certified under any DOD helicopter may be flown in the single point configuration by any DOD helicopter with suitable lift capability.

c. Previously Certified Dual-Point Loads. Loads cannot be certified for dual-point lift based on previously certified dual-point rigging procedures because of the differences in dual hook helicopters, such as the distance between the two cargo hooks. Rigging procedures for dual-point loads must be developed and/or approved by SSC before the evaluation flight.

1-5. UNIQUE ITEMS OF EQUIPMENT OR OPERATIONAL REQUIREMENTS

Helicopter sling loading of unique items, due to operational requirements, will be at the discretion of the commander. Equipment not listed in this manual should be static lifted (when possible) by a crane to determine proper rigging and stability characteristics. Personnel thoroughly familiar with sling load rigging procedures should assist in the static lift testing. Flight evaluating may be conducted after a satisfactory static rigging configuration has been determined.

NOTE: Low density equipment with low weight and large surface area (flat surfaces), such as shelters, empty trailers, pallet loads, boat shaped items, and empty fuel or water drums, are likely to become extremely unstable when flown during sling load operations, even at low airspeeds, and should be flown with extreme caution.

1-6. EQUIPMENT RIGGING PROCEDURES

This section explains the information that is contained in the rigging procedures for each load. Chapters 2 through 13 contain the rigging procedures for certified dual-point loads and chapter 14 contains the rigging procedures for suitable dual-point loads.

a. Applicability Paragraph. The applicability paragraph states whether a load is "certified" or "suitable" for sling load. It also contains the helicopter types and recommended airspeeds for each helicopter type.

For certified loads, this airspeed is the maximum airspeed attained by the helicopter during the evaluation flight before the load became unstable or before the aircraft power requirements were exceeded. For suitable loads, the rec-

ommended airspeed is based on previous experience with this helicopter/load combination. **For either certified or suitable loads, the airspeed listed is a recommendation and not a restriction, unless so stated. The aircrew should closely monitor the load during the flight, especially if the helicopter exceeds the recommended airspeed.**

b. Load Description. The load description paragraph identifies the load, model, or other identification, and the weight of the load for certification.

(1) The actual weight of the equipment may vary somewhat from the actual rigged weight during the flight evaluation due to equipment modifications, fuel, equipment added to the load, or different models of the same item. The load weight on the equipment data plate or in the operator's manual takes precedence over the load weight in this manual. Weigh the load if there is any doubt about its actual weight. If the load weight exceeds the weight listed in the load description paragraph, the load becomes a unique load. Contact your service point of contact if you have any questions about the load description or weight.

(2) Equipment such as cargo trailers and cargo trucks contain descriptions of the allowable additional cargo weight. Do not exceed the fully loaded weight. Some loads become extremely unstable at low weights; therefore, a minimum weight is identified. If your trailer is below that weight, add more cargo or dummy weight as close to the center of the trailer as possible until you reach the minimum weight.

c. Preparation. The preparation steps are intended to reduce the possibility of damage to the equipment caused by sling leg entanglement during the hookup and lift-off operation or by wind resistance encountered during the flight. Since these preparation steps are not directive in nature, the commander assumes responsibility for any damage to the equipment caused by deviation from the preparation steps.

d. Rigging. The rigging steps give information as to the position of the apex fitting on the load, routing orientation of the sling legs, location of the lift provisions, chain link number for each sling leg, and steps required to prevent the sling legs from becoming entangled on the load. Do not change the chain link number in the rigging procedures under any circumstances as it may change sling leg loading and cause lift provision failure.

(1) The purpose of the illustration accompanying the rigging procedures is to depict what a properly rigged load looks like with the slack removed from the sling legs. The arrow identifies the direction of flight.

(2) Appendix A contains NSN component listings for slings, sling sets, cargo nets, and other miscellaneous equipment and materials.

1-7. GENERAL RIGGING INSTRUCTIONS

CAUTION
Inspect lifting provisions and supporting structure for damage or degradation prior to sling loading. Do not transport loads with damaged or degraded lift provisions.

a. Preparing the Load. Prepare the load to be transported by following the preparation and rigging instructions for each item. Typical preparation instructions will provide information to secure loose items, remove or secure canvas covers, and remove obstructions, such as antennas. Place protective padding on windshields and other components that could be damaged by the metal parts of the sling set during hookup or release. The load should be secure enough to withstand winds in excess of 120 knots caused by the forward airspeed of the aircraft. If possible, position the load in the takeoff direction so the pilot does not have to pick the load up and then turn the aircraft into the takeoff direction.

b. Preparing the Equipment. Inspect and assemble the slings and miscellaneous equipment required to prepare and rig the load. Following the instructions in Chapter 6 of FM 10-450-3/MCRP 4-23E, VOL I/NWP 3-04.11/AFJMAN 11-223, VOL I/COMDTINST M13482.2A, add or remove sling legs, chains, or apex fittings as required. Never exceed the capacity of the sling legs or apex fitting/web ring. If you have a sling set with a higher capacity than the sling set prescribed, use the chain link conversion chart in Appendix B to determine the corresponding chain link for your sling set.

c. Positioning and Attaching the Sling Set. Position the sling set near the load. The sling legs for a typical load

with four lifting points are routed as shown in Figure 1-1.

(1) Rigging a typical load with four lifting points is begun by connecting -

(a) Sling leg 1 to the left front lifting provision.

(b) Sling leg 2 to the right front lifting provision.

(c) Sling leg 3 to the left rear lifting provision.

(d) Sling leg 4 to the right rear lifting provision.

(2) If a six-leg sling set is required, the innermost sling legs, 5 and 6, are connected to the left and right middle lift provisions.

NOTE: Odd numbered sling legs go to the same side of the load.

(3) Following the equipment rigging procedures, loop the free end of the chain end through the lift provision and insert the specified chain link in the grabhook/grab link. Tie or tape the excess chain end to prevent the unrestrained chain from damaging the load. If necessary, wrap padding around the chain or rope assembly to prevent damage to the load or sling set. If the procedures prescribe a spreader bar, install and pad it according to the rigging instructions.

(4) Breakaway safety ties are used to temporarily restrain the sling legs to keep them from becoming entangled on the load as the helicopter lifts the load. These safety ties are made of Type I, 1/4-inch cotton webbing or duct tape.

d. Viewing the Load. Left, right, front, and rear directions are designated from the driver's perspective for vehicles and towed equipment. Howitzer gun tubes are considered the front of the load. The front or rear is identified on other items of equipment. The sling leg numbering system prevents sling legs from crossing each other and causing damage to the sling legs or causing the load to twist in flight. To improve flight stability, some loads are transported backwards. Do not confuse the front of the load as it is carried with the end designated as the front for rigging purposes. The arrow shown in the illustration identifies the direction of flight.

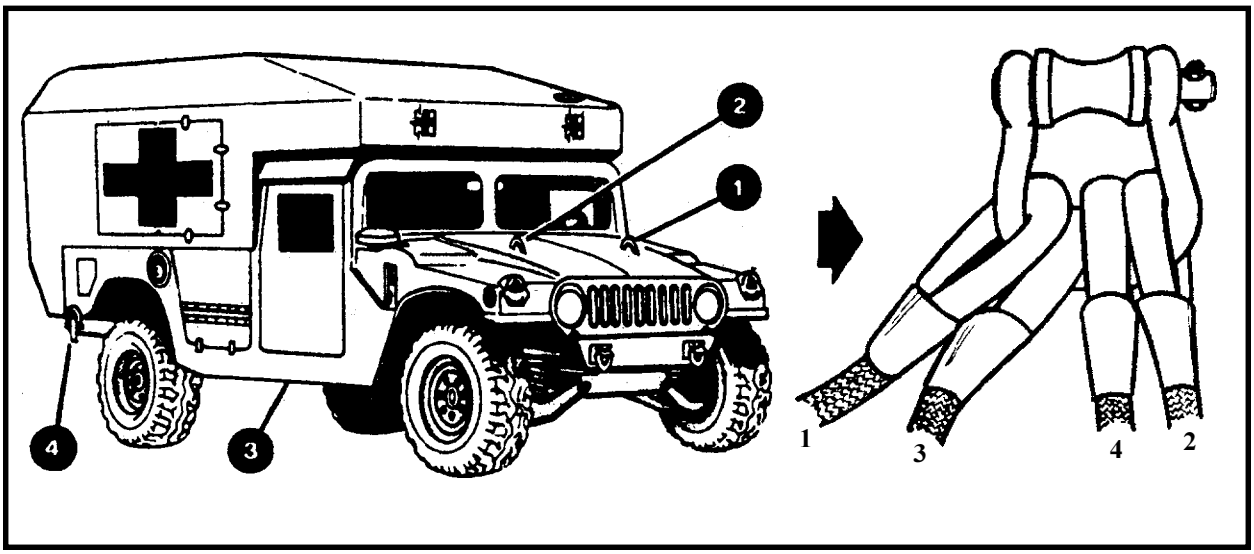

Figure 1-1. Sling Leg Lifting Point Designation

CHAPTER 2

CERTIFIED DUAL-POINT RIGGING PROCEDURES FOR WHEELED VEHICLES

2-1. INTRODUCTION

This chapter contains rigging procedures for dual-point wheeled vehicle loads that have been certified for sling load. Each rigging procedure is found in a paragraph that includes a description of the load, materials required for rigging, and steps to complete the procedure. An applicability paragraph is also a part of each paragraph and identifies the certified loads. The certified dual-point rigging procedures for wheeled vehicles are in this section.

Paragraphs 2-2 through 2-39 give detailed instructions for rigging loads. The paragraphs also contain a description of each load and the materials required for rigging it.

NOTE: Reach Pendants may be used on dual point loads. Place a Reach Pendant on each apex fitting. A static discharge person is not required when using a Reach Pendant.

2-2. M996/M997/M997A2 Truck, Ambulance (HMMWV)

a. Applicability. The following items in Table 2-1 are certified for the helicopter(s) listed in the following table by the US Army Soldier Systems Center:

Table 2-1. Truck, Ambulance (HMMWV)

NOMENCLATURE	MAX WEIGHT (POUNDS)	SLING SET	LINK COUNT FRONT/ REAR	TYPE OF AIRCRAFT	RECOMMENDED AIRSPEED (KNOTS)
Truck, Ambulance, M996, HMMWV	7,400	10K 25K	80/45 66/38	CH-47	130
Truck, Ambulance, M997, HMMWV	7,400	10K 25K	80/45 66/38	CH-47	130
Truck, Ambulance, M997A1, HMMWV, 4-Litter	7,600	15K 40K	25/3 30/9	CH-53	120
Truck, Ambulance, M997A2, HMMWV	7,600	10K	80/45	CH-47	130

b. Materials. The following materials are required to rig this load:

(1) Sling set (see table) with one additional apex fitting or web ring for the sling set being used.

(2) Tape, adhesive, pressure-sensitive, 2-inch wide roll.

(3) Cord, nylon, Type III, 550-pound breaking strength.

(4) Spreader bar assembly (component of vehicle).

(5) Webbing, cotton, 1/4-inch, 80-pound breaking strength.

c. Personnel. Two persons can prepare and rig this load in 15 minutes.

d. Procedures. The following procedures apply to this load:

(1) Preparation. Prepare the load using the following steps:

(a) Fold the mirrors forward in front of the windshield and tie together with Type III nylon cord.

(b) Remove the spreader bar from under the right-hand seat inside the ambulance.

(c) Secure all equipment inside the rear compartment with tape, nylon cord, and/or lashings. Close and secure the door.

(d) Secure all other equipment inside the vehicle with tape, nylon cord, and/or lashings. Close and secure the doors.

(e) Ensure the fuel tank is not over 3/4 full. Inspect fuel tank cap, oil filler cap, and battery caps for proper installation.

(f) Engage the vehicle parking brake. Place the transmission in neutral.

(g) Ensure the front wheels are pointed straight ahead. Tie down the steering wheel using the securing device attached under the dashboard.

(h) Secure the Red Cross insignia covers in the closed position.

(i) Remove the keeper from the spreader bar and extend the bar so the holes line up. Reinstall pin and engage keeper. Use the sighting hole in the tube to assist in aligning holes for the pin. See top view insert in Figure 2-1.

(j) Position the spreader bar across the rear end of the vehicle roof. Attach the spreader bar check cables to the eyebolts located on the aft exterior sidewall of the rear compartment. See rear view insert in Figure 2-1.

(k) Install lift provisions on the outer ends of the rear bumper.

(2) Rigging. Rig the load according to the steps in Figure 2-1.

(3) Hookup. The static wand person discharges the static electricity with the static wand. The forward hookup person stands on the hood and places apex fitting 1 onto the forward cargo hook. The aft hookup person stands on the roof and places apex fitting 2 onto the aft cargo hook. The hookup team then carefully dismounts the vehicle and remains close to the load as the helicopter removes slack from the sling legs. When successful hookup is assured, the hookup team quickly exits the area underneath the helicopter to the designated rendezvous point.

(4) Derigging. Derigging is the reverse of the preparation and rigging procedures in steps d (1) and d (2).

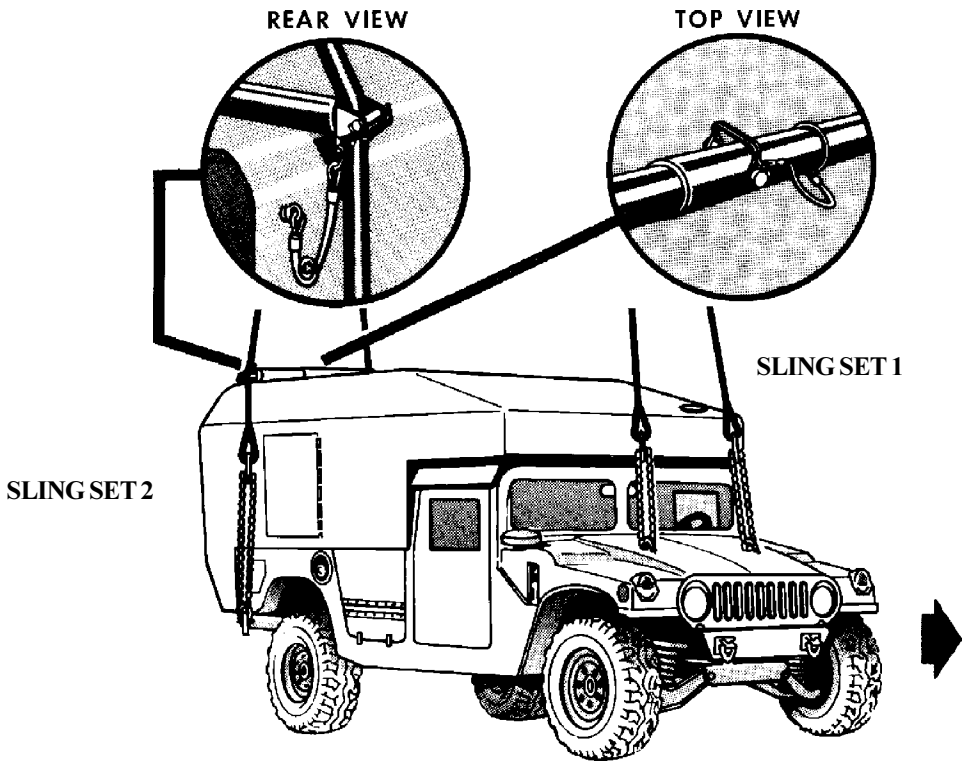

RIGGING STEPS

1. Connect 2 sling legs to apex fitting number 1. Position the apex fitting on top of the hood.

2. Loop the chain end of the sling legs through their respective lift provisions that protrudes through the hood. Place the correct link from Table 2-1 in the grab hook.

3. Connect 2 sling legs to apex fitting number 2. Position the apex fitting on top of the rear compartment. Place the nylon rope of the sling legs in the guides on the ends of the spreader bar. Attach the spreader bar guide retainer pins and keepers. Lay the spreader bar on the roof. Ensure the sling legs are in front of the check cable eyebolts.

4. The rear lift provisions are located on the outer ends of the rear bumper. Loop the chain end of sling legs through their respective lift provisions. Place the correct link from Table 2-1 in the grab hook.

5. Secure all excess chain with tape or Type III nylon cord.

6. Cluster and tie or tape (breakaway technique) the sling legs in each sling set on top of the vehicle to prevent entanglement during hookup and lift-off.

Figure 2-1. M996/M997/M997A1/M997A2 Ambulance (HMMWV)

CAUTION

Do not use the lift shackles located near the center of the rear bumper for sling load lift provisions.

2-3. M966/M1036/Ml045/M1045A2/M1046 TOW Missile Carrier (HMMWV) M1025/M1025A2/M1026/M1043/M1043A2/M1044 Armament Carrier (HMMWV) M1114 Up-Armored HMMWV

a. Applicability. The following items in Table 2-2 are certified for the helicopter(s) listed in the following table by the US Army Soldier Systems Center:

Table 2-2. TOW Missile/Armament Carrier (HMMWV)

NOMENCLATURE	MAX WEIGHT (POUNDS)	SLING SET	LINK COUNT FRONT/ REAR	TYPE OF AIRCRAFT	RECOMMENDED AIRSPEED (KNOTS)
TOW Missile Carrier (HMMWV), M966/M1036/M1045/M1046	Varies by Model	10K 15K 40K	80/45 25/3 30/9	CH-47 CH-53 CH-53	130
TOW Missile Carrier, HMMWV, M1045A2	10,300	25K 15K 40K	65/36 25/3 30/9	CH-47 CH-53 CH-53	130
Armament Carrier, HMMWV, M1025/M1026	8,200	15K 40K 10K	25/3 40/9 80/45	CH-53 CH-53 CH-47	130
Armament Carrier, HMMWV, M1043/M1044	8,400	15K 40K 10K	25/3 40/9 80/45	CH-53 CH-53 CH-47	130
Armament Carrier, HMMWV, M1025A2/M1043A2	10,300	15K 40K 25K	25/3 40/9 65/36	CH-53 CH-53 CH-47	130
Up-Armored HMMWV, M1114	12,100	25K	60/30	CH-47	100

b. Materials. The following materials are required to rig this load:

(1) Sling set (10,000-pound capacity, 25,000-pound capacity, or 40,000-pound capacity) with one additional apex fitting for the sling set being used.

OR

(2) Multileg sling set (15,000-pound capacity) (2 each).

(3) Tape, adhesive, pressure-sensitive, 2-inch wide roll.

(4) Cord, nylon, Type III, 550-pound breaking strength.

(5) Webbing, cotton, 1/4-inch, 80-pound breaking strength.

c. Personnel. Two persons can prepare and rig this load in 15 minutes.

d. Procedures. The following procedures apply to this load:

(1) Preparation. Prepare the load using the following steps:

(a) Fold mirrors forward in front of the windshield for added protection and tie together with Type III nylon cord.

(b) Secure all equipment and cargo inside the vehicle with tape, nylon cord, or lashings. Remove antennas and stow inside vehicle.

(c) Ensure the fuel tank is not over 3/4 full. Inspect fuel tank cap, oil filler cap, and battery caps for proper installation.

(d) Engage the vehicle parking brake and place the transmission in neutral.

(e) Ensure the front wheels are pointed straight ahead. Tie down the steering wheel, using the securing device attached under the dashboard.

CAUTION
DO NOT APPLY TAPE TO THE WINDOWS OR WINDSHIELD OF THE M1114 UP-ARMORED HMMWV. TAPE WILL DAMAGE THE WINDOWS.

(2) Rigging. Rig the load according to the steps in Figure 2-2.

(3) Hookup. The hookup team stands on the roof of the vehicle. The static wand person discharges the static electricity with the static wand. The forward hookup person places apex fitting 1 onto the forward cargo hook. The aft hookup person places apex fitting 2 onto the aft cargo hook. The hookup team then carefully dismounts the vehicle and remains close to the load as the helicopter removes slack from the sling legs. When successful hookup is assured, the hookup team quickly exits the area underneath the helicopter to the designated rendezvous point.

(4) Derigging. Derigging is the reverse of the preparation and rigging procedures in steps d (1) and d (2).

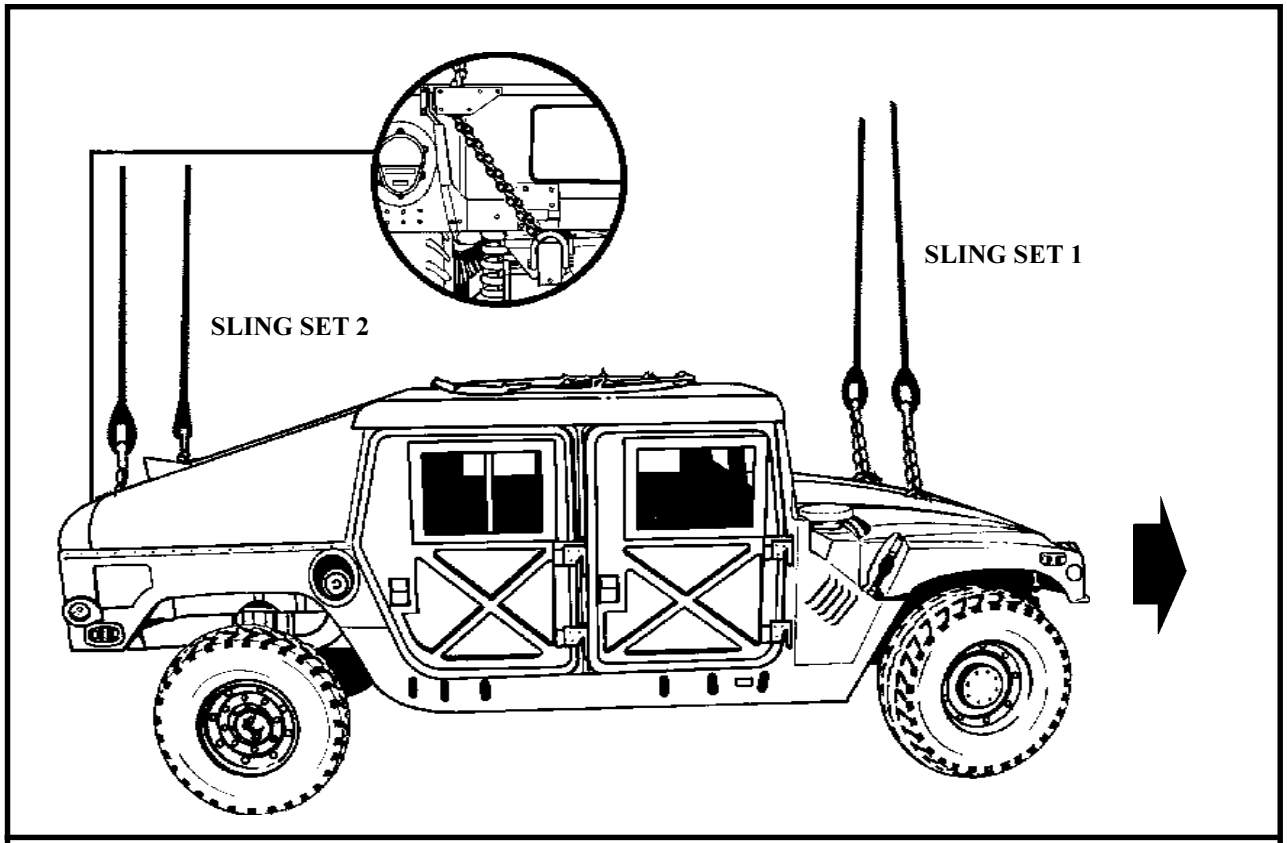

RIGGING STEPS

1. Connect 2 sling legs to apex fitting number 1. Position the apex fitting on top of the hood.

2. Loop the chain end of the sling legs through their respective lift provisions that protrudes through the hood. Place the correct link from Table 2-2 in the grab hook.

3. Connect 2 sling legs to apex fitting number 2. Position the apex fitting on the roof of the vehicle.

4. Loop the chain end of the sling legs through their respective eyelet openings in the upper corner of the tail gate. Loop the chain end through the lift shackle on the rear bumper and thread back through the eyelet opening in the tailgate. Place the correct link from Table 2-2 in the grab hook.

5. Secure all excess chain with tape or Type III nylon cord.

6. Cluster and tie or tape (breakaway technique) the sling legs in each sling set on top of the vehicle to prevent entanglement during hookup and lift-off.

Figure 2-2. TOW Missile Carrier (HMMWV)

2-4. M998/M1037 Modified (GVW 9,400 lbs)/M1038/M1097/M1097A2 Truck, Cargo, 1 1/4-ton (HMMWV)

a. Applicability. The following items in Table 2-3 are certified for the helicopter(s) listed in the following table by the US Army Soldier Systems Center:

Table 2-3. 1 1/4-Ton Cargo Truck (HMMWV)

NOMENCLATURE	MAX WEIGHT (POUNDS)	SLING SET	LINK COUNT FRONT/ REAR	TYPE OF AIRCRAFT	RECOMMENDED AIRSPEED (KNOTS)
Truck, 1 1/4-ton, HMMWV, M998/M1038	7,700	10K 15K 40K	80/45 25/3 30/9	CH-47 CH-53	125 130
Truck, 1 1/4-ton, HMMWV, M998 with AN/MRC-110A Radio Set	7,700	10K 15K 40K	80/45 25/3 30/9	CH-47 CH-53	125 130
Truck, 1 1/4-ton, HMMWV, M998A1, Joint Surveillance Target Attack Radar (JSTAR), Support Vehicle	7,500	10K	80/45	CH-47	125
Truck, 1 1/4-ton, HMMWV, Modified, (GVW 9,400 lbs), M1037	9,400	10K	80/25	CH-47	125
Truck, 1 1/4-ton, Heavy HMMWV, Cargo Variant, M1097	10,001	25K	60/10	CH-47	125
Truck, 1 1/4-ton, Heavy HMMWV, Cargo Variant, M1097A2	10,300	25K	60/10	CH-47	125

WARNING

THIS CARGO VEHICLE (M1037 MODIFIED, 9,400-LB GVW) SHOULD NOT BE CONFUSED WITH THE SHELTER CARRIER (M1037, 8,600-LB GVW). THE M1037 MODIFIED HAS IMPROVED LIFT PROVISIONS WHICH ALLOWS IT TO BE LIFTED AT HIGHER GROSS VEHICLE WEIGHTS.

b. Materials. The following materials are required to rig this load:

(1) Sling set (10,000-pound capacity, 25,000-pound capacity, or 40,000-pound capacity) with one additional apex fitting for the sling set being used.

OR

(2) Multileg sling set (15,000-pound capacity) (2 each).

(3) Tape, adhesive, pressure-sensitive, 2-inch wide roll.

(4) Cord, nylon, Type III, 550-pound breaking strength.

(5) Webbing, cotton, 1/4-inch, 80-pound breaking strength.

c. Personnel. Two persons can prepare and rig this load in 15 minutes.

d. Procedures. The following procedures apply to this load:

(1) Preparation. Prepare the load using the following steps:

(a) Fold mirrors forward in front of the windshield for added protection and tie together with Type III nylon cord. If installed, remove canvas covering over the bed of the truck. Remove the doors. If time permits, fold canvas top and tie to windshield for added protection.

(b) Secure all equipment and cargo inside the vehicle with tape, nylon cord, or lashings. Remove antennas and stow inside vehicle.

(c) Ensure the fuel tank is not over 3/4 full. Inspect fuel tank cap, oil filler cap, and battery caps for proper installation.

(d) Engage the vehicle parking brake and put the transmission in neutral.

(e) Ensure the front wheels are pointed straight ahead. Tie down the steering wheel, using the securing device attached under the dashboard.

(2) Rigging. Rig the load according to the steps in Figure 2-3.

(3) Hookup. The static wand person discharges the static electricity with the static wand. The forward hookup person stands in the drivers compartment and places apex fitting 1 onto the forward cargo hook. The aft hookup person stands in the bed of the truck and places apex fitting 2 onto the aft cargo hook. The hookup team then carefully dismounts the vehicle and remains close to the load as the helicopter removes slack from the sling legs. When successful hookup is assured, the hookup team quickly exits the area underneath the helicopter to the designated rendezvous point.

(4) Derigging. Derigging is the reverse of the preparation and rigging procedures in steps d (1) and d (2).

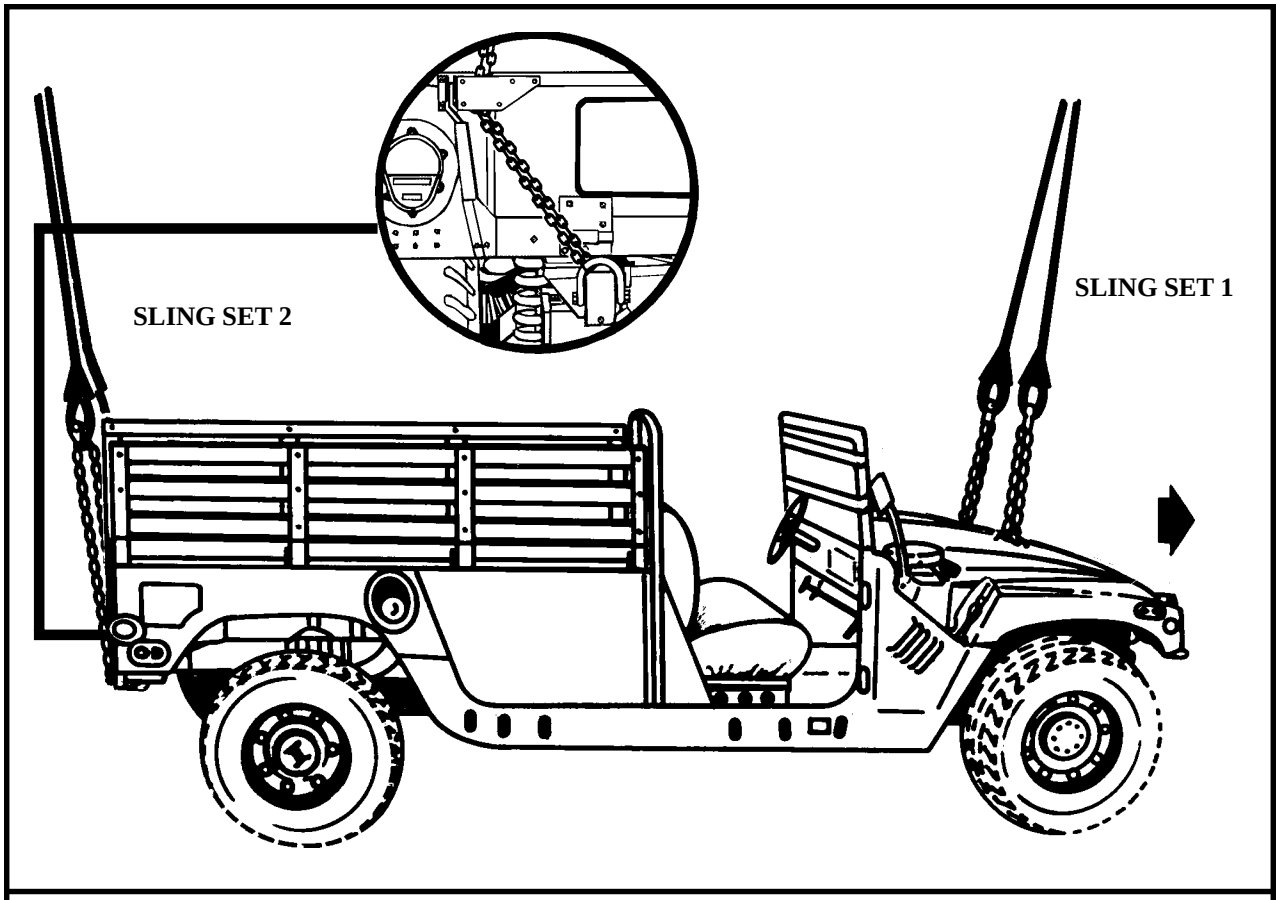

RIGGING STEPS

1. Connect 2 sling legs to apex fitting number 1. Position the apex fitting on top of the hood.

2. Loop the chain end of the sling legs through their respective lift provisions that protrudes through the hood. Place the correct link from Table 2-3 in the grab hook.

3. Connect 2 sling legs to apex fitting number 2. Position the apex fitting in the bed of the vehicle.

4. Loop the chain end of the sling legs through their respective eyelet openings in the upper corner of the tail gate. Loop the chain end through the lift shackle on the rear bumper and thread back through the eyelet opening in the tailgate. Place the correct link from Table 2-3 in the grab hook.

5. Secure all excess chain with tape or Type III nylon cord.

6. Cluster and tie or tape (breakaway technique) the sling legs in each sling set on top of the vehicle to prevent entanglement during hookup and lift-off.

Figure 2-3. 1 1/4-Ton Cargo Truck (HMMWV)

2-5. M1037 Shelter Carrier (HMMWV) With S-250 or S-250E Shelter

a. Applicability. The following items in Table 2-4 are certified for the helicopter(s) listed in the following table by the US Army Soldier Systems Center:

Table 2-4. Shelter Carrier (HMMWV) With S-250/S-250E Shelter

NOMENCLATURE	MAX WEIGHT (POUNDS)	SLING SET	LINK COUNT FRONT/ REAR	TYPE OF AIRCRAFT	RECOMMENDED AIRSPEED (KNOTS)
NC Operations	8,800	10K	80/45	CH-47	120
NC Switch	8,513	10K	80/45	CH-47	120
NC LOS (V3)	8,611	10K	80/45	CH-47	120
NC Management	8,800	10K	80/45	CH-47	120
NC Support Vehicle	8,400	10K	80/45	CH-47	120
LEN Operations	8,800	10K	80/45	CH-47	120
LEN Switch	8,800	10K	80/45	CH-47	120
LEN LOS (V4)	8,800	10K	80/45	CH-47	120
LEN Management	8,800	10K	80/45	CH-47	120
LEN Cable Vehicle	8,180	10K	80/45	CH-47	120
SCC Command	8,800	10K	80/45	CH-47	120
SCC Planning	8,300	10K	80/45	CH-47	120
SCC Technical	8,507	10K	80/45	CH-47	120
LOS (V1)	8,800	10K	80/45	CH-47	120
LOS (V2)	8,500	10K	80/45	CH-47	120
Radio Access Unit	8,800	10K	80/45	CH-47	120
SEN (V1)	8,800	10K	80/45	CH-47	120
SEN (V2)	8,800	10K	80/45	CH-47	120
Maintenance #1	8,084	10K	80/45	CH-47	120
Maintenance #2	8,350	10K	80/45	CH-47	120

Table 2-4. Shelter Carrier (HMMWV) With S-250/S-250E Shelter (Continued)

NOMENCLATURE	MAX WEIGHT (POUNDS)	SLING SET	LINK COUNT FRONT/ REAR	TYPE OF AIRCRAFT	RECOMMENDED AIRSPEED (KNOTS)
Battalion Spares	8,800	10K	80/45	CH-47	120
Company Spares	7,850	10K	80/45	CH-47	120
AN/TLQ-17	8,200	10K	80/45	CH-47	120
AN/TLQ-17A (V3)	8,040	10K	80/45	CH-47	120
Deployable Media Production Center	7,840	10K	80/45	CH-47	120
Operational Control Group (OCG) /Firefinder AN/TPQ-36 (V) Block IIB	7,500	10K 15K	80/45	CH-47 CH-53	120

b. Materials. The following materials are required to rig this load:

(1) Sling set (10,000-pound capacity) with one additional apex fitting.

(2) Chain length, part number 38850-00053-101, from a 10,000-pound capacity sling set (4 each).

(3) Coupling link, part number 577-0615, from a 10,000-pound sling set (4 each).

OR

(4) Multileg sling set (15,000-pound capacity) with one additional web ring.

(5) Chain length, part number 34080-4, from a 15,000-pound capacity sling set (4 each).

(6) Coupling link, part number 31611, from a 15,000-pound sling set (4 each).

(7) Tape, adhesive, pressure-sensitive, 2-inch wide roll.

(8) Cord, nylon, Type III, 550-pound breaking strength.

(9) Webbing, cotton, 1/4-inch, 80-pound breaking strength.

(10) Felt sheet, cattle hair, Type IV, 1/2-inch or suitable padding.

c. Personnel. Two persons can prepare and rig this load in 15 minutes.

d. Procedures. The following procedures apply to this load:

(1) Preparation. Prepare the load using the following steps:

(a) Connect one additional chain length to each chain of the sling set with the coupling link.

(b) Fold mirrors forward in front of the windshield for added protection and tie together with Type III nylon cord.

(c) Secure the shelter to the truck using wire rope or tie-down assemblies. Secure all equipment inside the shelter with tape, nylon cord, or lashings; close and secure the door.

(d) Secure all equipment and cargo inside the vehicle with tape, nylon cord, or lashings. Secure the doors shut if installed.

(e) Ensure the fuel tank is not over 3/4 full. Inspect fuel tank cap, oil filler cap, and battery caps for proper installation.

(f) Engage the vehicle parking brake and put the transmission in neutral.

(g) Ensure the front wheels are pointed straight ahead. Tie down the steering wheel, using the securing device attached under the dashboard.

(h) Install the lift provisions on the outer ends of the rear bumper by removing the tiedown provisions located inboard of the bumper end and installing them on the outer ends of the rear bumper.

(2) Rigging. Rig the load according to the steps in Figure 2-4.

(3) Hookup. The hookup team stands on top of the shelter. The static wand person discharges the static electricity with the static wand. The hookup person places the apex fitting onto the aircraft cargo hook. The hookup team then carefully dismounts the vehicle and remains close to the load as the helicopter removes slack from the sling legs. When successful hookup is assured, the hookup team quickly exits the area underneath the helicopter to the designated rendezvous point.

(4) Derigging. Derigging is the reverse of the preparation and rigging procedures in steps d (1) and d (2).

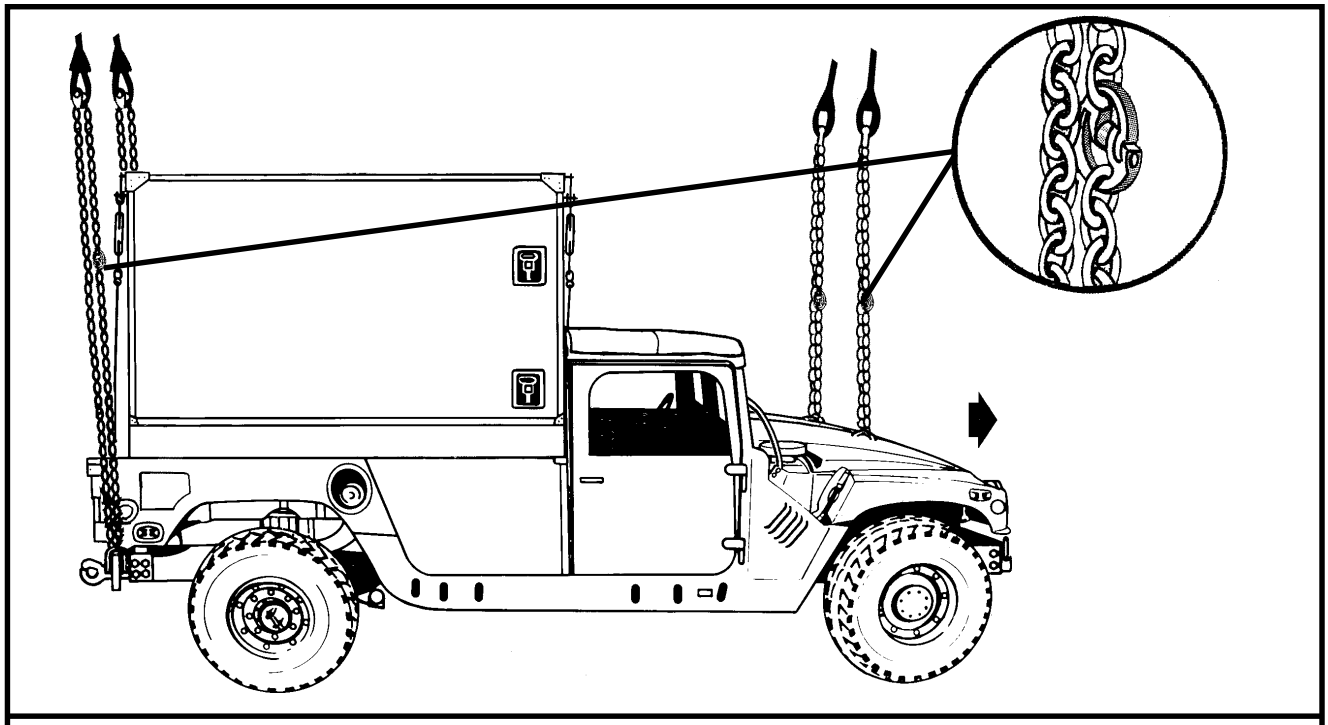

RIGGING STEPS

1. Connect 2 sling legs to apex fitting number 1. Position the apex fitting on top of the hood.

2. Loop the chain end of the sling legs through their respective lift provisions that protrudes through the hood. Place the correct link from Table 2-4 in the grab hook.

3. Connect 2 sling legs to apex fitting number 2. Position the apex fitting in the bed of the vehicle.

4. Loop the chain end through the lift shackle on the rear bumper located on the outer ends of the bumper. Place the correct link from Table 2-4 in the grab hook.

5. Wrap the rear slings with padding where they contact the shelter sides.

6. Secure all excess chain with tape or Type III nylon cord.

7. Cluster and tie or tape (breakaway technique) the sling legs in each sling set on top of the vehicle to prevent entanglement during hookup and lift-off.

Figure 2-4. M1037 Shelter Carrier with S-250/S-250E Shelter

CAUTION

Do not use the lift shackles located near the center of the rear bumper for sling load lift provisions.

2-6. M1097 Shelter Carrier, Heavy HMMWV, With S-250 or S-250E Shelter

a. Applicability. The following items in Table 2-5 are certified for the helicopter(s) listed in the following table by the US Army Soldier Systems Center:

Table 2-5. Shelter Carrier, (Heavy HMMWV), With S-250/S-250E Shelter

NOMENCLATURE	MAX WEIGHT (POUNDS)	SLING SET	LINK COUNT FRONT/ REAR	TYPE OF AIRCRAFT	RECOMMENDED AIRSPEED (KNOTS)
S-250/S-250E	10,001	25K	60/10	CH-47	120
AN/TRC-170 Communication Shelter	9,240	15K	40/3	CH-53	130
TRQ-32, Intelligence and Electronic Warfare (IEW) System	9,700	10K	60/10	CH-47	120
Platoon Operations Center (POC), Intelligence and Electronic Warfare (IEW) System	9,700	10K	60/10	CH-47	120
Mobile Subscriber Equipment Contingency Communications Package/Light Forces Contingency Communications Package in S-250E	9,993	10K	60/10	CH-47	120
Mobile Subscriber Equipment Contingency Communications Package/Light Forces Contingency Communications Package in S-250	8,913	10K	60/10	CH-47	120
LOS (V1)	9,038	10K	60/10	CH-47	120
LOS (V2)	9,038	10K	60/10	CH-47	120
LOS (V3)	9,038	10K	60/10	CH-47	120
LOS (V4)	9,038	10K	60/10	CH-47	120
NODAL Support Vehicle	8,250	10K	60/10	CH-47	120

NOTE: All certified shelters in paragraph 2-5 (M1037) Shelter Carrier, HMMWV, With S-250/S-250E Shelter) are certified for sling loading on the M1097 Shelter Carrier with an increased maximum weight of 300 pounds.

b. Materials. The following materials are required to rig this load:

(1) Sling set (10,000-pound capacity or 25,000-pound capacity) with one additional apex fitting for the

sling set being used.

OR

(2) Multileg sling set (15,000-pound capacity for the CH-53E only) with one additional web ring.

(3) Additional chain lengths from the sling set being used (4 each).

(4) Additional coupling links from the sling set being used (4 each).

(5) Tape, adhesive, pressure-sensitive, 2-inch wide roll.

(6) Cord, nylon, Type III, 550-pound breaking strength.

(7) Webbing, cotton, 1/4-inch, 80-pound breaking strength.

(8) Felt sheet, cattle hair, Type IV, 1/2-inch or suitable padding.

c. Personnel. Two persons can prepare and rig this load in 15 to 25 minutes.

d. Procedures. The following procedures apply to this load:

(1) Preparation. Prepare the load using the following steps:

(a) Connect one additional chain length to each chain of the sling set with the coupling link.

(b) Fold mirrors forward in front of the windshield for added protection and tie together with Type III nylon cord.

(c) Secure the shelter to the truck using wire rope or tie-down assemblies. Secure all equipment inside the shelter with tape, nylon cord, or lashings; close and secure the door.

(d) Secure all equipment and cargo inside the vehicle with tape, nylon cord, or lashings. Secure the doors shut if installed.

(e) Ensure the fuel tank is not over 3/4 full. Inspect fuel tank cap, oil filler cap, and battery caps for proper installation.

(f) Engage the vehicle parking brake and put the transmission in neutral.

(g) Ensure the front wheels are pointed straight ahead. Tie down the steering wheel, using the securing device attached under the dashboard.

(h) Install the lift provisions on the outer ends of the rear bumper.

(2) Rigging. Rig the load according to the steps in Figure 2-5.

(3) Hookup. The hookup team stands on top of the shelter. The static wand person discharges the static electricity with the static wand. The forward hookup person places apex fitting 1 onto the forward cargo hook. The aft hookup person places apex fitting 2 onto the aft cargo hook. The hookup team then carefully dismounts the vehicle and remains close to the load as the helicopter removes slack from the sling legs. When successful hookup is assured, the hookup team quickly exits the area underneath the helicopter to the designated rendezvous point.

(4) Derigging. Derigging is the reverse of the preparation and rigging procedures in steps d (1) and d (2).

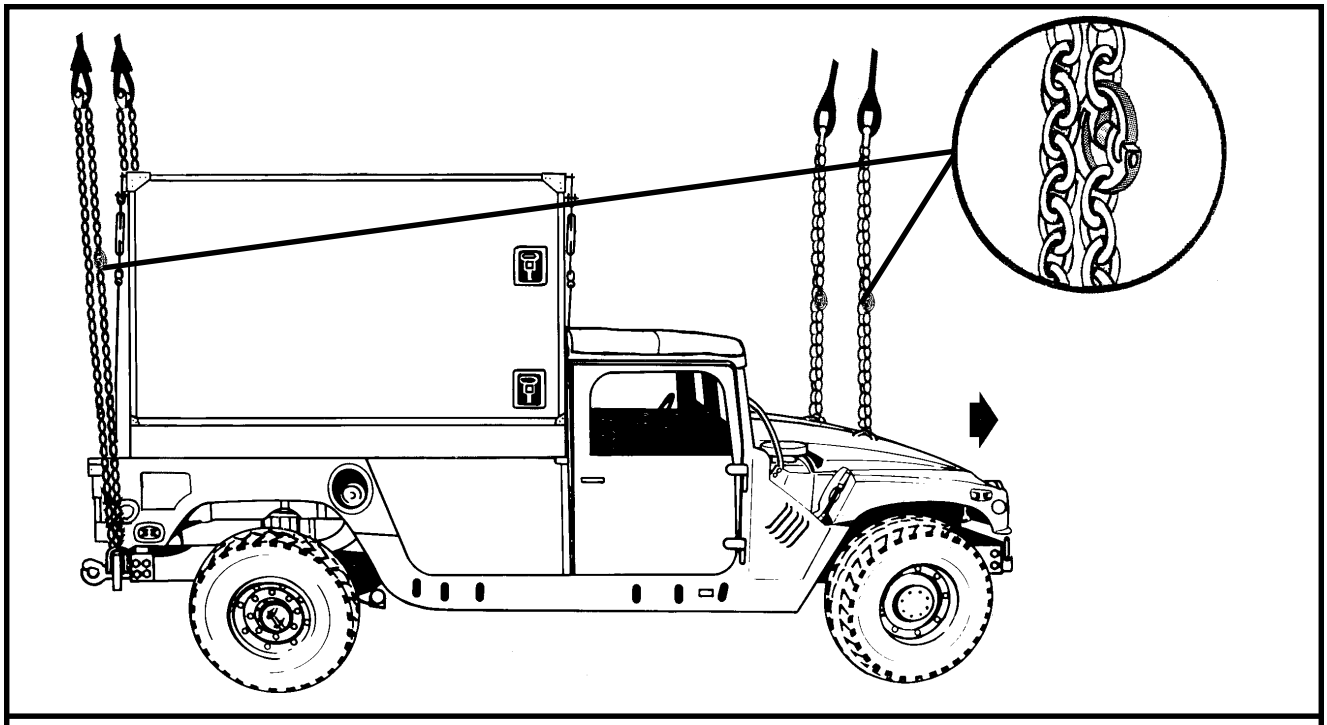

RIGGING STEPS

1. Connect 2 sling legs to apex fitting number 1. Position the apex fitting on top of the hood.

2. Loop the chain end of the sling legs through their respective lift provisions that protrudes through the hood. Place the correct link from Table 2-5 in the grab hook.

3. Connect 2 sling legs to apex fitting number 2. Position the apex fitting in the bed of the vehicle.

4. Loop the chain end through the lift shackle on the rear bumper located on the outer ends of the bumper. Place the correct link from Table 2-5 in the grab hook.

5. Wrap the rear slings with padding where they contact the shelter sides.

6. Secure all excess chain with tape or Type III nylon cord.

7. Cluster and tie or tape (breakaway technique) the sling legs in each sling set on top of the vehicle to prevent entanglement during hookup and lift-off.

Figure 2-5. M1097 Shelter Carrier with S-250/S-250E Shelter

CAUTION

Do not use the lift shackles located near the center of the rear bumper for sling load lift provisions.

2-7. M1097/M1097A2 Shelter Carrier (HMMWV) With Lightweight Multipurpose Shelter (LMS) (USMC)

a. Applicability. The following items in Table 2-6 are certified for the helicopter(s) listed in the following table by the US Army Soldier Systems Center:

Table 2-6. Lightweight Multipurpose Shelter (LMS)

NOMENCLATURE	MAX WEIGHT (POUNDS)	SLING SET	LINK COUNT FRONT/ REAR	TYPE OF AIRCRAFT	RECOMMENDED AIRSPEED (KNOTS)
High Mobility Downsized (HMD) Direct Air Support Central	8,420	15K	40/3	CH-53	120
Operations Central (OC) Group Firefinder AN/TPQ-36 (V) 8	8,620	15K	40/3	CH-53	120
Integrated Meteorological Systems (IMETS), Block I & II	9,050	15K	40/3	CH-53	120
Enhanced Position Location Reporting System (EPLRS) Downsized Net Control Station (NCS-E(D))	10,000	15K	40/3	CH-53	120
High Frequency Communications Central AN/TRC 120	8,765	15K	40/3	CH-53	150
Tactical Remote Sensor System (TRSS) Sensor Mobile Monitoring System (SMMS)	7,685	15K	40/3	CH-53	120
Meteorological Measuring Set AN/TMQ-41	7,770	15K	40/3	CH-53	110
Air Defense Communications Platform AN/MSQ-124	10,000	15K	40/3	CH-53	120
Marine Expeditionary Force Intelligence Analysis System S1	9,194	15K	40/3	CH-53	100
Marine Expeditionary Force Intelligence Analysis System S2	9,126	15K	40/3	CH-53	100
Tactical Control and Analysis Center	9,300	15K	40/3	CH-53	100

b. Materials. The following materials are required to rig this load:

(1) Multileg sling set (15,000-pound capacity) with one additional web ring.

(a) Additional chain lengths from the multileg sling set (8 each).

(b) Additional coupling links from the multileg sling set (8 each).

(3) Tape, adhesive, pressure-sensitive, 2-inch wide roll.

(4) Cord, nylon, Type III, 550-pound breaking strength.

(5) Webbing, cotton, 1/4-inch, 80-pound breaking strength.

(6) Felt sheet, cattle hair, Type IV, 1/2-inch or suitable padding.

(7) Padding, cellulose.

c. Personnel. Two persons can prepare and rig this load in 15 minutes.

d. Procedures. The following procedures apply to this load:

(1) Preparation. Prepare the load using the following steps:

(a) Extend the sling leg chains by connecting two additional chain lengths to each chain on the 15,000-pound multileg sling set chain with coupling links.

(b) Fold mirrors forward in front of the windshield for added protection and tie together with Type III nylon cord.

(c) Secure all equipment inside the shelter with tape, nylon cord, or lashings; close and secure shelter vents and door with nylon cord or tape.

(d) Secure environmental control unit cover with duct tape.

(e) Disconnect the power cord from the rear panel and secure it to the rear platform with Type III nylon cord. Lower the power panel door and secure the door.

(f) Secure all equipment and cargo inside the vehicle with tape, nylon cord, or lashings. Secure the doors shut if installed.

(g) Ensure the fuel tank is not over 3/4 full. Inspect fuel tank cap, oil filler cap, and battery caps for proper installation.

(h) Engage the vehicle parking brake and put the transmission in neutral.

(i) Ensure the front wheels are pointed straight ahead. Tie down the steering wheel, using the securing device attached under the dashboard.

(j) Tape the windshield in an X formation from corner to corner.

(k) Install the lift provisions on the outer ends of the rear bumper.

(l) Remove the upper antenna mounting bracket if installed.

(2) Rigging. Rig the load according to the steps in Figure 2-6.

(3) Hookup. The hookup team stands on top of the shelter. The static wand person discharges the static electricity with the static wand. The forward hookup person places apex fitting 1 onto the forward cargo hook. The aft hookup person places apex fitting 2 onto the aft cargo hook. The hookup team then carefully dismounts the vehicle and remains close to the load as the helicopter removes slack from the sling legs. When successful hookup is assured, the hookup team quickly exits the area underneath the helicopter to the designated rendezvous point.

(4) Derigging. Derigging is the reverse of the preparation and rigging procedures in steps d (1) and d (2).

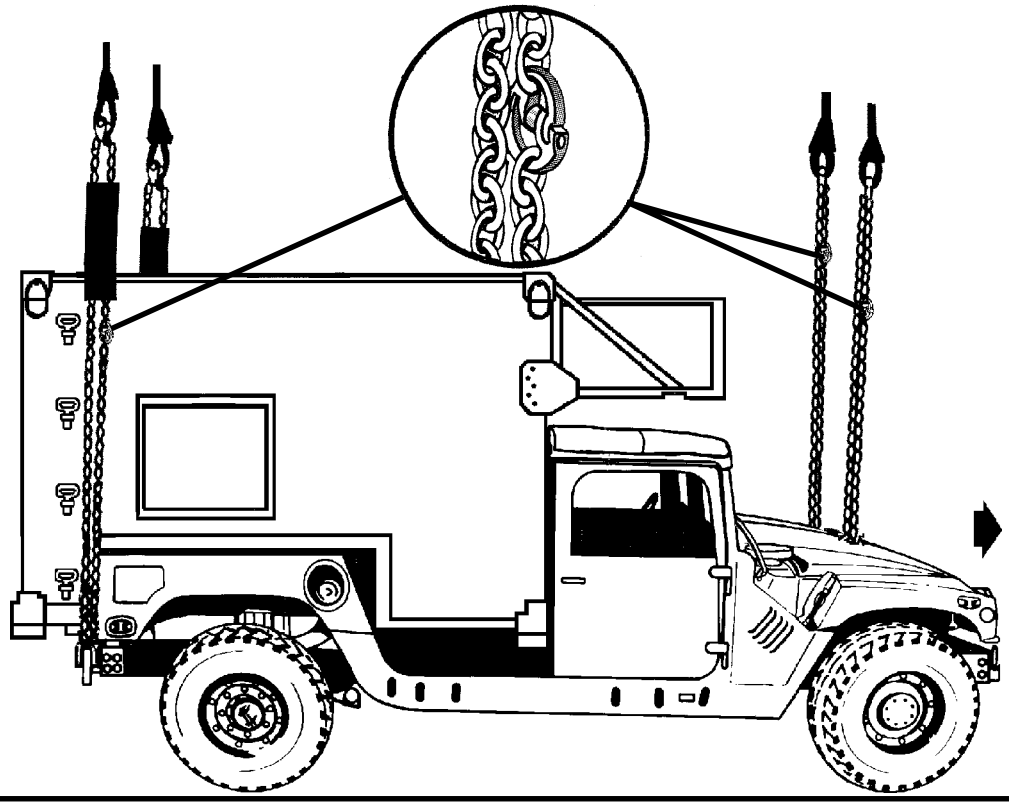

RIGGING STEPS

1. Connect 2 sling legs to apex fitting number 1. Position the apex fitting on top of the shelter.

2. Loop the chain end of the sling legs through their respective lift provisions that protrudes through the hood. Place the correct link from Table 2-6 in the grab hook.

3. Connect 2 sling legs to apex fitting number 2. Position the apex fitting on top of the shelter.

4. Loop the chain end of the sling legs through their respective lift provisions located on the outer ends of the rear bumper. Place the correct link from Table 2-6 in the grab hook.

5. Wrap the rear slings with padding where they contact the shelter sides.

6. Secure all excess chain with tape or Type III nylon cord.

7. Cluster and tie or tape (breakaway technique) the sling legs in each sling set on top of the vehicle to prevent entanglement during hookup and lift-off.

Figure 2-6. LMS Shelter Mounted on the M1097 /M1097A2

CAUTION

Do not use the lift shackles located near the center of the rear bumper for sling load lift provisions.

2-7.1 M1097/M1097A2 Shelter Carrier (HMMWV) With Lightweight Multipurpose Shelter (LMS) Using Shelter Lift Rings as Sling Guides

a. Applicability. The following items in Table 2-6.1 are certified for the helicopter(s) listed in the following table by the US Army Soldier Systems Center:

Table 2-6.1 Lightweight Multipurpose Shelter (LMS)

NOMENCLATURE	MAX WEIGHT (POUNDS)	SLING SET	LINK COUNT FRONT/ REAR	TYPE OF AIRCRAFT	RECOMMENDED AIRSPEED (KNOTS)
Operations Central (OC) Group Firefinder AN/TPQ-36 (V) 8	8,620	10K	40/3	CH-47	120
Integrated Meteorological Systems (IMETS), Block I & II	9,050	10K	40/3	CH-47	120
Digital Group Multiplexer (DGM) AN/TRC-138C	9,020	10K	40/3	CH-47	120
High Mobility Digital Group Multiplexer Assemblage (HMDA) AN/TRC-173B, AN/TRC-174B, AN/TRC-175B	9,100	10K	40/3	CH-47	120
Marine Expeditionary Force Intelligence Analysis System (IAS)	9,220	10K	40/3	CH-47	120
Spare Equipment and Maintenance Shelter AN/TSQ-190 (V) 1	9,220	10K	40/3	CH-47	120
Meteorological Measuring Set AN/TMQ-41	7,770	10K	40/3	CH-47	110
Forward Area Air Defense Command Control System AN/TSQ-183	7,561	10K	40/3	CH-47	90
Forward Area Air Defense Command Control System AN/TSQ-184	7,297	10K	40/3	CH-47	90
Mobile Radio Broadcasting Subsystem (MRBS)	9,746	10K	40/3	CH-47	120
Mobile Radio (MR) Cargo Vehicle	9,907	10K	40/3	CH-47	120
Mobile Television Broadcasting Subsystem (MTBS)	9,295	10K	40/3	CH-47	120

Table 2-6.1 Lightweight Multipurpose Shelter (LMS) (Continued)

NOMENCLATURE	MAX WEIGHT (POUNDS)	SLING SET	LINK COUNT FRONT/ REAR	TYPE OF AIRCRAFT	RECOMMENDED AIRSPEED (KNOTS)
Mobile Television (MT) Cargo Vehicle	9,637	10K	40/3	CH-47	120
Mission Vehicle for the Common Ground Station, Joint Surveillance Target Attack Radar (JSTAR) System	10,300	25K	32/5	CH-47	120
Advanced Field Artillery Tactical Data Systems (AFATADS), System #1, RWS with a CHS-2 AN/GYG-3(V)1	8,882	10K	40/3	CH-47	100

b. Materials. The following materials are required to rig this load:

(1) Sling set (10,000-pound capacity) with one additional apex fitting.

(a) Chain length, part number 38850-00053-101, from a 10,000-pound capacity sling set (4 each).

(b) Coupling link, part number 5779125, from a 10,000-pound sling set (4 each).

OR

(2) Sling set (25,000-pound capacity) with one additional apex fitting.

(a) Chain length, part number 38850-00053-102, from a 25,000-pound capacity sling set (4 each).

(b) Coupling link, part number 664241, from a 25,000-pound sling set (4 each).

(3) Tape, adhesive, pressure-sensitive, 2-inch wide roll.

(4) Cord, nylon, Type III, 550-pound breaking strength.

(5) Webbing, cotton, 1/4-inch, 80-pound breaking strength.

c. Personnel. Two persons can prepare and rig this load in 20 minutes.

d. Procedures. The following procedures apply to this load:

(1) Preparation. Prepare the load using the following steps:

(a) Extend the sling leg chains by connecting one additional chain length to each chain on a 10,000- or 25,000-pound capacity sling set with coupling links.

(b) Fold mirrors forward in front of the windshield for added protection and tie together with Type III nylon cord.

(c) Secure all equipment inside the shelter with tape, nylon cord, or lashings; close and secure shelter vents and door with nylon cord or tape.

(d) Secure environmental control unit cover with duct tape.

(e) Disconnect the power cord from the rear panel and secure it to the rear platform with Type III nylon cord. Lower the power panel door and secure the door.

(f) Secure all equipment and cargo inside the vehicle with tape, nylon cord, or lashings. Secure the

doors shut if installed.

(g) Ensure the fuel tank is not over 3/4 full. Inspect fuel tank cap, oil filler cap, and battery caps for proper installation.

(h) Engage the vehicle parking brake and put the transmission in neutral.

(i) Ensure the front wheels are pointed straight ahead. Tie down the steering wheel, using the securing device attached under the dashboard.

(j) Tape the windshield in an X formation from corner to corner.

(k) Install the lift provisions on the outer ends of the rear bumper.

(l) Tie the shelter's rear lift rings together across the top of the shelter with Type III nylon cord. Place the rings in the up position facing the front of the vehicle.

(2) Rigging. Rig the load according to the steps in Figure 2-6.1.

NOTE: The procedures shown in Figure 2-6 may be used as alternate rigging procedures provided there is no interference between the sling leg chains and antenna mounts or other items on the vehicle. When using the procedures in Figure 2-6, use the link counts from Table 2-6.1.

(3) Hookup. The hookup team stands on top of the shelter. The static wand person discharges the static electricity with the static wand. The forward hookup person places apex fitting 1 onto the forward cargo hook. The aft hookup person places apex fitting 2 onto the aft cargo hook. The hookup team then carefully dismounts the vehicle and remains close to the load as the helicopter removes slack from the sling legs.When successful hookup is assured, the hookup team quickly exits the area underneath the helicopter to the designated rendezvous point.

(4) Derigging. Derigging is the reverse of the preparation and rigging procedures in steps d (1) and d (2).

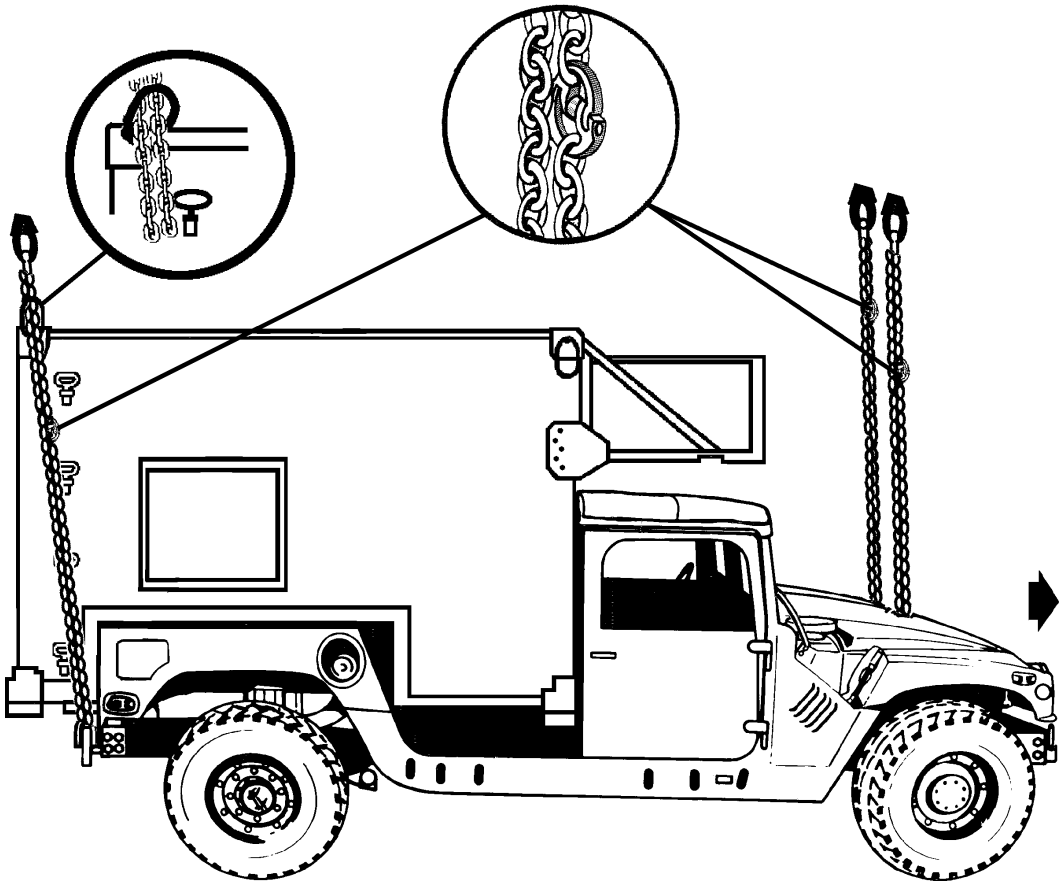

RIGGING STEPS

1. Connect 2 sling legs to apex fitting number 1. Position the apex fitting on top of the shelter.

2. Loop the chain end of the sling legs through their respective lift provisions that protrudes through the hood. Place the correct link from Table 2-6.1 in the grab hook.

3. Connect 2 sling legs to apex fitting number 2. Position the apex fitting on top of the shelter.

4. Route the right sling leg chain through the right rear shelter lift ring to the right rear lift provision located on the outer end of the rear bumper. Continue routing the chain back through the right rear shelter lift ring and back to the grab hook. Place the correct link from Table 2-6.1 in the grab hook. Repeat the procedure using the left sling leg chain, left rear shelter lift ring, and the left lift provision located on the end of the bumper.

5. Remove all the excess slack between the lift provisions and the shelter lift rings.

6. Secure all excess chain with tape or Type III nylon cord.

7. Cluster and tie or tape (breakaway technique) the sling legs in each sling set on top of the vehicle to prevent entanglement during hookup and lift-off.

Figure 2-6.1. LMS Shelter Mounted on the M1097 /M1097A2Using Shelter Lift Rings as Sling Guides

CAUTION

Do not use the lift shackles located near the center of the rear bumper for sling load lift provisions.

2-7.2 M1113 Truck, Utility, Expanded Capacity (HMMWV) With Lightweight Multipurpose Shelter (LMS) Using Shelter Lift Rings as Sling Guides

a. Applicability. The following items in Table 2-6.2 are certified for the helicopter(s) listed in the following table by the US Army Soldier Systems Center:

Table 2-6.2 Lightweight Multipurpose Shelter (LMS) Using Shelter Lift Rings as Sling Guides

NOMENCLATURE	MAX WEIGHT (POUNDS)	SLING SET	LINK COUNT FRONT/ REAR	AIRCRAFT	RECOMMENDED AIRSPEED (KNOTS)
AN/TTC-56 Single Shelter Switch (SSS)	11,500	25K	32/5	CH-47	120
Digital Topographic Support System-Light (DTSS-L), AN/TYQ-67 (V)1	11,500	25K	32/5	CH-47	100

b. Materials. The following materials are required to rig this load:

(1) Sling set (25,000-pound capacity) with one additional apex fitting.

(a) Chain length, part number 38850-00053-102, from a 25,000-pound capacity sling set (4 each).

(b) Coupling link, part number 664241, from a 25,000-pound sling set (4 each).

(2) Tape, adhesive, pressure-sensitive, 2-inch wide roll.

(3) Cord, nylon, Type III, 550-pound breaking strength.

(4) Webbing, cotton, 1/4-inch, 80-pound breaking strength.

c. Personnel. Two persons can prepare and rig this load in 20 minutes.

d. Procedures. The following procedures apply to this load:

(1) Preparation. Prepare the load using the following steps:

(a) Extend the sling leg chains by connecting one additional chain length to each chain on a 25,000-pound capacity sling set with coupling links.

(b) Fold mirrors forward in front of the windshield for added protection and tie together with Type III nylon cord.

(c) Secure all equipment inside the shelter with tape, nylon cord, or lashings; close and secure shelter vents and door with nylon cord or tape.

(d) Secure environmental control unit cover with duct tape.

(e) Disconnect the power cord from the rear panel and secure it to the rear platform with Type III nylon cord. Lower the power panel door and secure the door.

(f) Secure all equipment and cargo inside the vehicle with tape, nylon cord, or lashings. Secure the doors shut if installed.

(g) Ensure the fuel tank is not over 3/4 full. Inspect fuel tank cap, oil filler cap, and battery caps for proper installation.

(h) Engage the vehicle parking brake and put the transmission in neutral.

(i) Ensure the front wheels are pointed straight ahead. Tie down the steering wheel, using the securing device attached under the dashboard.

(j) Tape the windshield in an X formation from corner to corner.

(k) Install the lift provisions on the outer ends of the rear bumper.

(l) Tie the shelter's rear lift rings together across the top of the shelter with Type III nylon cord. Place the rings in the up position facing the front of the vehicle.

(2) Rigging. Rig the load according to the steps in Figure 2-6.2.

(3) Hookup. The hookup team stands on top of the shelter. The static wand person discharges the static electricity with the static wand. The forward hookup person places apex fitting 1 onto the forward cargo hook. The aft hookup person places apex fitting 2 onto the aft cargo hook. The hookup team then carefully dismounts the vehicle and remains close to the load as the helicopter removes slack from the sling legs.When successful hookup is assured, the hookup team quickly exits the area underneath the helicopter to the designated rendezvous point.

(4) Derigging. Derigging is the reverse of the preparation and rigging procedures in steps d (1) and d (2).

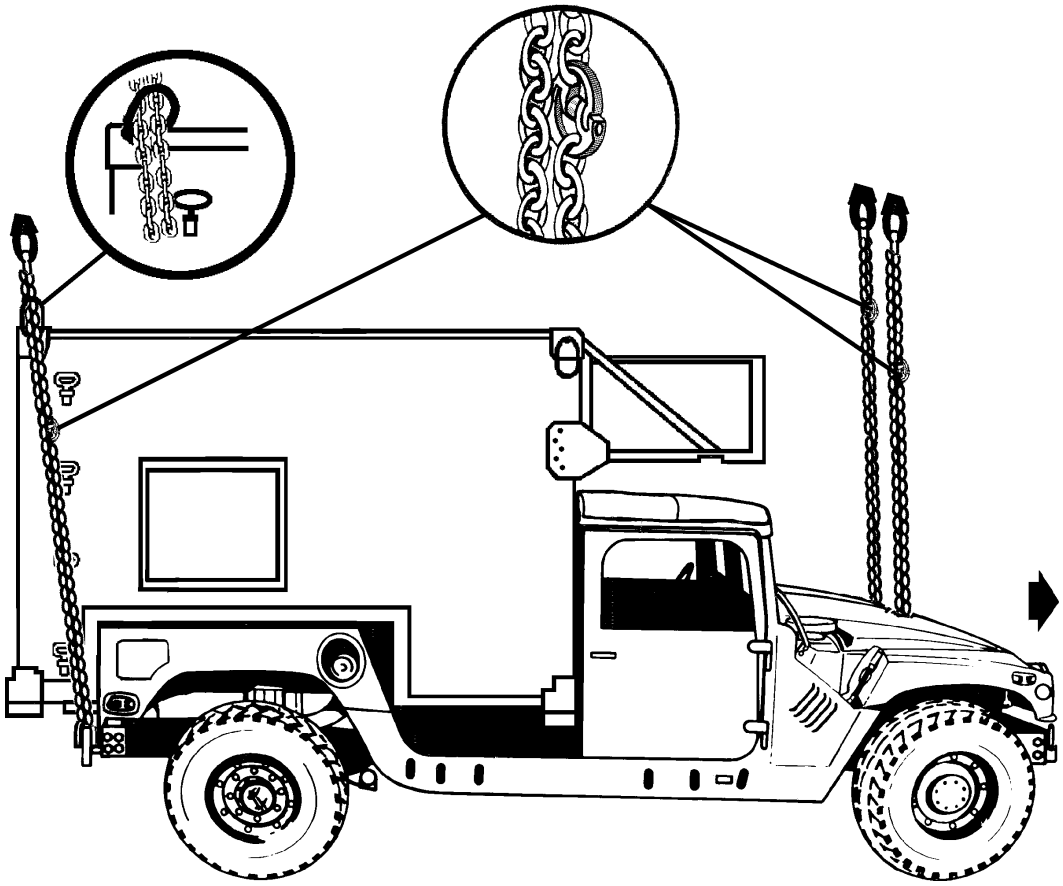

RIGGING STEPS

1. Connect 2 sling legs to apex fitting number 1. Position the apex fitting on top of the shelter.

2. Loop the chain end of the sling legs through their respective lift provisions that protrudes through the hood. Place the correct link from Table 2-6.2 in the grab hook.

3. Connect 2 sling legs to apex fitting number 2. Position the apex fitting on top of the shelter.

4. Route the right sling leg chain through the right rear shelter lift ring to the right rear lift provision located on the outer end of the rear bumper. Continue routing the chain back through the right rear shelter lift ring and back to the grab hook. Place the correct link from Table 2-6.2 in the grab hook. Repeat the procedure using the left sling leg chain, left rear shelter lift ring, and the left lift provision located on the end of the bumper.

5. Remove all the excess slack between the lift provisions and the shelter lift rings.

6. Secure all excess chain with tape or Type III nylon cord.

7. Cluster and tie or tape (breakaway technique) the sling legs in each sling set on top of the vehicle to prevent entanglement during hookup and lift-off.

Figure 2-6.2. LMS Shelter Mounted on the M1113 Using Shelter Lift Rings as Sling Guides

CAUTION

Do not use the lift shackles located near the center of the rear bumper for sling load lift provisions.

2-8. M1037/M1042 Shelter Carrier (HMMWV) With Lightweight Multipurpose Shelter (LMS)

a. Applicability. The following items in Table 2-7 are certified for the helicopter(s) listed in the following table by the US Army Soldier Systems Center:

Table 2-7. Lightweight Multipurpose Shelter (LMS) on M1037/M1042

NOMENCLATURE	MAX WEIGHT (POUNDS)	SLING SET	LINK COUNT FRONT/ REAR	TYPE OF AIRCRAFT	RECOMMENDED AIRSPEED (KNOTS)
Digital Group Multiplexer (DGM) AN/TRC-138C	9,020	10K	40/3	CH-47	120
High Frequency Communications Central AN/TRC 120	8,765	15K	40/3	CH-53	150

b. Materials. The following materials are required to rig this load:

(1) Sling set (10,000-pound capacity) with one additional apex fitting.

(a) Chain length, part number 38850-00053-101, from a 10,000-pound capacity sling set (4 each).

(b) Coupling link, part number 577-0615, from a 10,000-pound sling set (4 each).

OR

(2) Multileg sling set (15,000-pound capacity for the CH-53E only) with one additional web ring.

(a) Additional chain lengths from the multileg sling set (8 each).

(b) Additional coupling links from the multileg sling set (8 each).

(3) Tape, adhesive, pressure-sensitive, 2-inch wide roll.

(4) Cord, nylon, Type III, 550-pound breaking strength.

(5) Webbing, cotton, 1/4-inch, 80-pound breaking strength.

(6) Felt sheet, cattle hair, Type IV, 1/2-inch or suitable padding.

(7) Padding, cellulose.

c. Personnel. Two persons can prepare and rig this load in 15 minutes.

d. Procedures. The following procedures apply to this load:

(1) Preparation. Prepare the load using the following steps:

(a) Extend the sling leg chains by connecting one additional chain length to each chain on a 10,000-, 25,000- or 40,000-pound capacity sling set with coupling links. Connect two additional chain lengths to each chain on the 15,000-pound multileg sling set chain with coupling links.

(b) Fold mirrors forward in front of the windshield for added protection and tie together with Type III nylon cord.

(c) Secure all equipment inside the shelter with tape, nylon cord, or lashings; close and secure shelter vents and door with nylon cord or tape.

(d) Secure environmental control unit cover with duct tape.

(e) Disconnect the power cord from the rear panel and secure it to the rear platform with Type III nylon cord. Lower the power panel door and secure the door.

(f) Secure all equipment and cargo inside the vehicle with tape, nylon cord, or lashings. Secure the doors shut if installed.

(g) Ensure the fuel tank is not over 3/4 full. Inspect fuel tank cap, oil filler cap, and battery caps for proper installation.

(h) Engage the vehicle parking brake and put the transmission in neutral.

(i) Ensure the front wheels are pointed straight ahead. Tie down the steering wheel, using the securing device attached under the dashboard.

(j) Tape the windshield in an X formation from corner to corner.

(k) Install the lift provisions on the outer ends of the rear bumper.

(l) Remove the upper antenna mounting bracket if installed.

(2) Rigging. (USMC - CH-53) Rig the load according to the steps in Figure 2-6 and using the link counts in Table 2-7.
(US ARMY - CH-47) Rig the load according to the steps in Figure 2-6.1 and using the link counts in Table 2-7.

(3) Hookup. The hookup team stands on top of the shelter. The static wand person discharges the static electricity with the static wand. The forward hookup person places apex fitting 1 onto the forward cargo hook. The aft hookup person places apex fitting 2 onto the aft cargo hook. The hookup team then carefully dismounts the vehicle and remains close to the load as the helicopter removes slack from the sling legs. When successful hookup is assured, the hookup team quickly exits the area underneath the helicopter to the designated rendezvous point.

(4) Derigging. Derigging is the reverse of the preparation and rigging procedures in steps d (1) and d (2).

2-9. M1097/M1113 Shelter Carrier (HMMWV) With Gitchner Model 1497A Shelter

a. Applicability. The following items in Table 2-8 are certified for the helicopter(s) listed in the following table by the US Army Soldier Systems Center:

Table 2-8. Gitchner Shelter on M1097/M1113

NOMENCLATURE	MAX WEIGHT (POUNDS)	SLING SET	LINK COUNT FRONT/ REAR	TYPE OF AIRCRAFT	RECOMMENDED AIRSPEED (KNOTS)
Joint Tactical Information Distribution System (JTIDS), AN/TYQ-JTIDS Shelter on M1097 HMMWV	10,000	10K	40/3	CH-47	120
AN/TSM-210 Electronic Shop on Enhanced Capacity Vehicle, M1113	10,360	25K	32/5	CH-47	120
Deployable Print Production Center	11,145	25K 15K	32/5 40/3	CH-47 CH-53	120

b. Materials. The following materials are required to rig this load:

(1) Sling set (see table) with one additional apex fitting.

(a) Chain length, for the sling set being used (4 each).

(b) Coupling link, for the sling set being used (4 each).

(2) Tape, adhesive, pressure-sensitive, 2-inch wide roll.

(3) Cord, nylon, Type III, 550-pound breaking strength.

(4) Webbing, cotton, 1/4-inch, 80-pound breaking strength.

(5) Felt sheet, cattle hair, Type IV, 1/2-inch or suitable padding.

(6) Padding, cellulose.

c. Personnel. Two persons can prepare and rig this load in 15 minutes.

d. Procedures. The following procedures apply to this load:

(1) Preparation. Prepare the load using the following steps:

(a) Extend the sling leg chains by connecting one additional chain length to each chain on a 10,000- or 25,000-capacity sling set with coupling links.

(b) Fold mirrors forward in front of the windshield for added protection and tie together with Type III nylon cord.

(c) Secure the shelter to the truck using wire rope or tie-down assemblies.

(d) Secure all equipment inside the shelter with tape, nylon cord, or lashings; close and secure shelter vents and door with nylon cord or tape.

(e) Secure environmental control unit cover with duct tape.

(f) Disconnect the power cord from the rear panel and secure it to the rear platform with Type III nylon cord. Lower the power panel door and secure the door.

(g) Secure all equipment and cargo inside the vehicle with tape, nylon cord, or lashings. Secure the doors shut if installed.

(h) Ensure the fuel tank is not over 3/4 full. Inspect fuel tank cap, oil filler cap, and battery caps for proper installation.

(i) Engage the vehicle parking brake and put the transmission in neutral.

(j) Ensure the front wheels are pointed straight ahead. Tie down the steering wheel, using the securing device attached under the dashboard.

(k) Tape the windshield in an X formation from corner to corner.

(l) Install the lift provisions on the outer ends of the rear bumper.

(2) Rigging. Rig the load according to the steps in Figure 2-7 and using the link counts in Table 2-8.

(3) Hookup. The hookup team stands on top of the shelter. The static wand person discharges the static electricity with the static wand. The forward hookup person places apex fitting 1 onto the forward cargo hook. The aft hookup person places apex fitting 2 onto the aft cargo hook. The hookup team then carefully dismounts the vehicle and remains close to the load as the helicopter removes slack from the sling legs. When successful hookup is assured, the hookup team quickly exits the area underneath the helicopter to the designated rendezvous point.

(4) Derigging. Derigging is the reverse of the preparation and rigging procedures in steps d (1) and d (2).

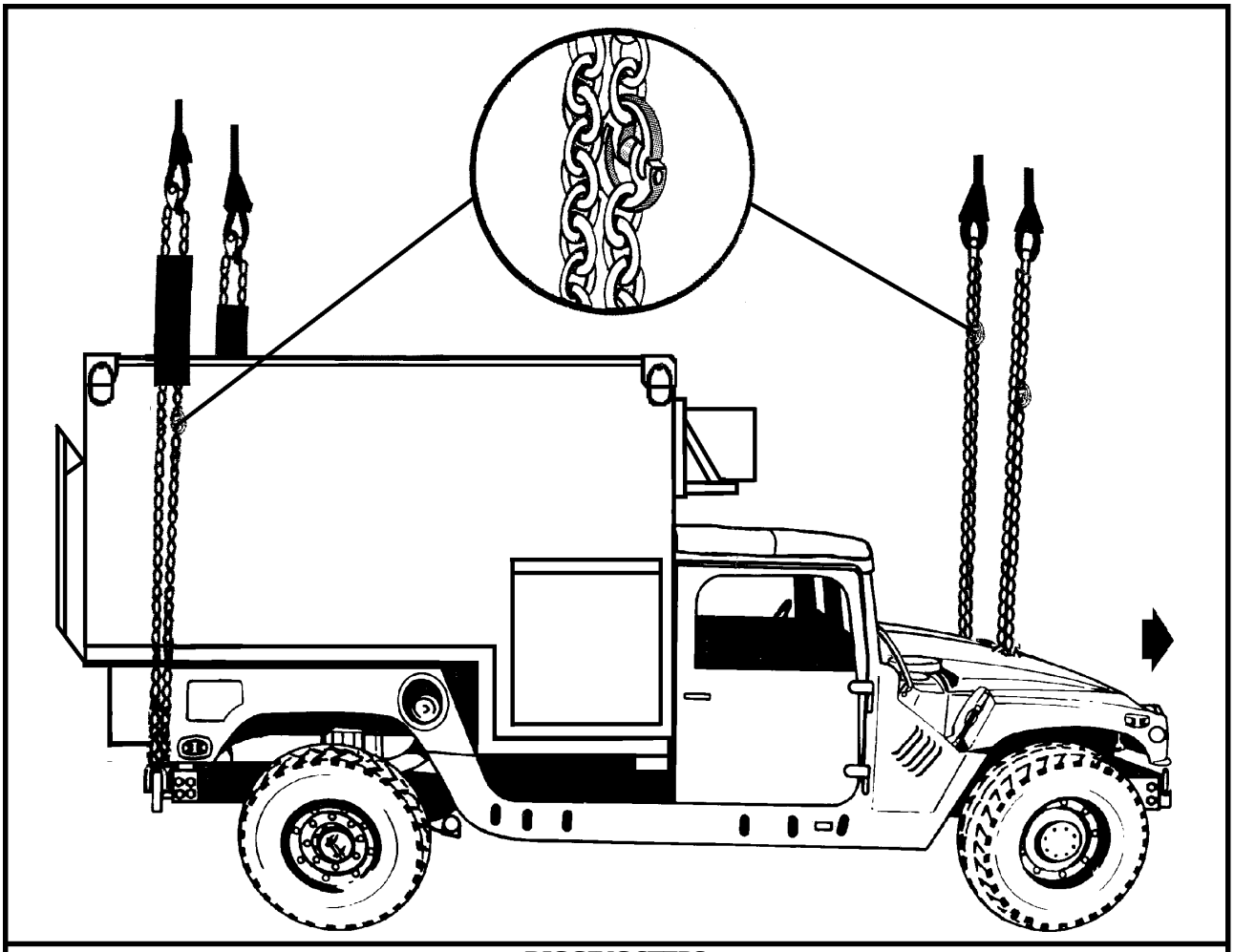

RIGGING STEPS

1. Connect 2 sling legs to apex fitting number 1. Position the apex fitting on top of the shelter.

2. Loop the chain end of the sling legs through their respective lift provisions that protrudes through the hood. Place the correct link from Table 2-8 in the grab hook.

3. Connect 2 sling legs to apex fitting number 2. Position the apex fitting on top of the shelter.

4. Loop the chain end of the sling legs through their respective lift provisions located on the outer ends of the rear bumper. Place the correct link from Table 2-8 in the grab hook.

5. Wrap the rear slings with padding where they contact the shelter sides.

6. Secure all excess chain with tape or Type III nylon cord.

7. Cluster and tie or tape (breakaway technique) the sling legs in each sling set on top of the vehicle to prevent entanglement during hookup and lift-off.

Figure 2-7. Gitchner Shelter Mounted on the M1097/M1113

2-10. M1037/M1097 Shelter Carrier (HMMWV) With G15840 Smoke Generator Set, M157/ M157A1E1

a. Applicability. The following items in Table 2-9 are certified for the helicopter(s) listed in the following table by the US Army Soldier Systems Center:

Table 2-9. G15840 Smoke Generator Set, M157, M157A1E1 on M1037/M1097

NOMENCLATURE	MAX WEIGHT (POUNDS)	SLING SET	LINK COUNT FRONT/ REAR	TYPE OF AIRCRAFT	RECOMMENDED AIRSPEED (KNOTS)
Smoke Generator Set, M157, on M1037 HMMWV	7,400	10K	40/3	CH-47	120
Smoke Generator Set, M157, on M1097 HMMWV	8,025	10K	40/3	CH-47	120
Smoke Generator Set, M157A1E1, on M1097 HMMWV	8,035	10K	40/3	CH-47	120

b. Materials. The following materials are required to rig this load.

(1) Sling set (10,000-pound capacity) with one additional apex fitting.

(2) Tape, adhesive, pressure-sensitive, 2-inch wide roll.

(3) Cord, nylon, Type III, 550-pound breaking strength.

(4) Webbing, cotton, 1/4-inch, 80-pound breaking strength.

(5) Felt sheet, cattle hair, Type IV, 1/2-inch or suitable padding.

c. Personnel. Two persons can prepare and rig this load in 15 minutes.

d. Procedures. The following procedures apply to this load:

(1) Preparation. Prepare the load using the following steps:

(a) Fold mirrors forward in front of the windshield for added protection and tie together with Type III nylon cord.

(b) Secure all equipment and cargo inside the vehicle with tape, nylon cord, or lashings. Secure the doors shut if installed.

(c) Ensure the fuel tank is not over 3/4 full. Inspect fuel tank cap, oil filler cap, and battery caps for proper installation.

(d) Engage the vehicle parking brake and put the transmission in neutral.

(e) Ensure the front wheels are pointed straight ahead. Tie down the steering wheel, using the securing device attached under the dashboard.

(f) Tape the windshield in an X formation from corner to corner.

(g) Install the lift provisions on the outer ends of the rear bumper.

(2) Rigging. Rig the load according to the steps in Figure 2-8.

(3) Hookup. The hookup team stands in the bed of the vehicle. The static wand person discharges the static electricity with the static wand. The forward hookup person places apex fitting 1 onto the forward cargo hook. The aft hookup person places apex fitting 2 onto the aft cargo hook. The hookup team then carefully dismounts the vehicle and remains close to the load as the helicopter removes slack from the sling legs. When successful hookup is assured, the hookup team quickly exits the area underneath the helicopter to the designated rendezvous point.

(4) Derigging. Derigging is the reverse of the preparation and rigging procedures in steps d (1) and d (2).

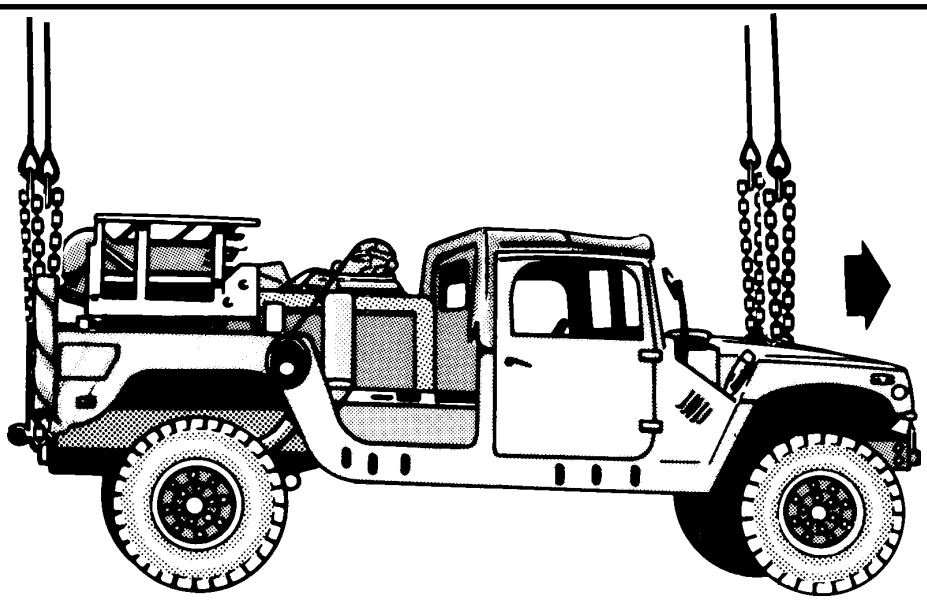

RIGGING STEPS

1. Connect 2 sling legs to apex fitting number 1. Position the apex fitting on the hood of the vehicle.

2. Loop the chain end of the sling legs through their respective lift provisions that protrudes through the hood. Place the correct link from Table 2-9 in the grab hook.

3. Connect 2 sling legs to apex fitting number 2. Position the apex fitting on top of the smoke generator.

4. Loop the chain end of the sling legs through their respective lift provisions located on the outer ends of the rear bumper. Place the correct link from Table 2-9 in the grab hook.

5. Wrap the rear slings with padding where they contact the vehicle sides.

6. Secure all excess chain with tape or Type III nylon cord.

7. Cluster and tie or tape (breakaway technique) the sling legs in each sling set on top of the vehicle to prevent entanglement during hookup and lift-off.

Figure 2-8. M157/M157A1E1 Smoke Generator Set Mounted on the M1037/M1097

CAUTION

Do not use the lift shackles located near the center of the rear bumper for sling load lift provisions.

2-11. M998 (HMMWV) With Two MRC-127 Stacks

a. Applicability. The following item in Table 2-10 is certified for the helicopter(s) listed in the following table by the US Army Soldier Systems Center:

Table 2-10. M998 (HMMWV) With Two MRC-127 Stacks

NOMENCLATURE	MAX WEIGHT (POUNDS)	SLING SET	LINK COUNT FRONT/ REAR	TYPE OF AIRCRAFT	RECOMMENDED AIRSPEED (KNOTS)
MRC-127 Stacks (Two) on M998 HMMWV	8,010	10K	80/3	CH-47	120

b. Materials. The following materials are required to rig this load:

(1) Sling set (10,000-pound capacity) with one additional apex fitting.

(2) Tape, adhesive, pressure-sensitive, 2-inch wide roll.

(3) Cord, nylon, Type III, 550-pound breaking strength.

(4) Webbing, cotton, 1/4-inch, 80-pound breaking strength.

(5) Felt sheet, cattle hair, Type IV, 1/2-inch or suitable padding.

c. Personnel. Two persons can prepare and rig this load in 20 minutes.

d. Procedures. The following procedures apply to this load:

(1) Preparation. Prepare the load using the following steps:

(a) Fold mirrors forward in front of the windshield for added protection and tie together with Type III nylon cord. Remove the canvas covering the bed of the truck. Fold the canvas and secure it over the windshield of the vehicle. Remove the doors and secure to the seats with Type III nylon cord.

(b) Secure all equipment and cargo inside the vehicle with tape, nylon cord, or lashings. Remove the antennas and stow inside the vehicle.

(c) Ensure the fuel tank is not over 3/4 full. Inspect fuel tank cap, oil filler cap, and battery caps for proper installation.

(d) Engage the vehicle parking brake and put the transmission in neutral.

(e) Ensure the front wheels are pointed straight ahead. Tie down the steering wheel, using the securing device attached under the dashboard.

(2) Rigging. Rig the load according to the steps in Figure 2-9.

(3) Hookup. The hookup team stands in the bed of the vehicle. The static wand person discharges the static electricity with the static wand. The forward hookup person places apex fitting 1 onto the forward cargo hook. The aft hookup person places apex fitting 2 onto the aft cargo hook. The hookup team then carefully dismounts the vehicle and remains close to the load as the helicopter removes slack from the sling legs. When successful hookup is assured, the hookup team quickly exits the area underneath the helicopter to the designated rendezvous point.

(4) Derigging. Derigging is the reverse of the preparation and rigging procedures in steps d (1) and d (2).

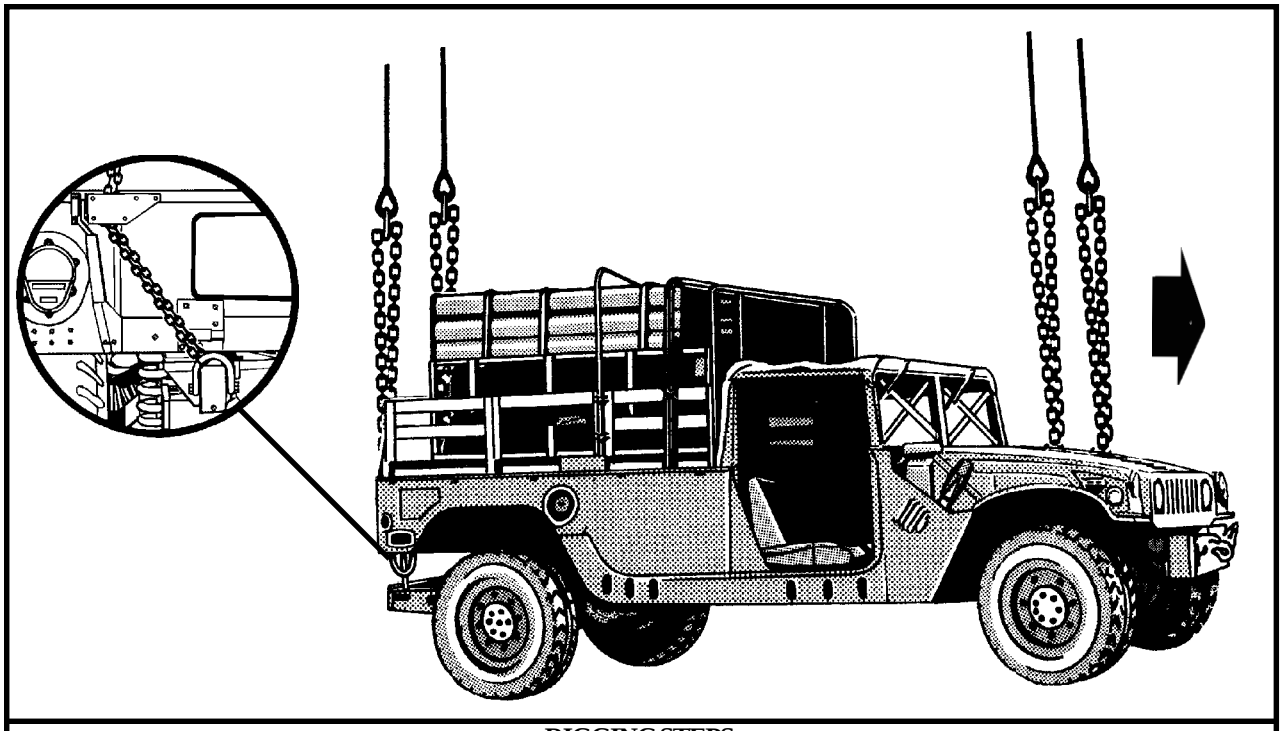

RIGGING STEPS

1. Connect 2 sling legs to apex fitting number 1. Position the apex fitting on the hood of the vehicle.

2. Loop the chain end of the sling legs through their respective lift provisions that protrudes through the hood. Place the correct link from Table 2-10 in the grab hook.

3. Connect 2 sling legs to apex fitting number 2. Position the apex fitting in the cargo bed of the vehicle.

4. Loop the chain end of the sling legs through their respective eyelet openings in the upper corner of the tailgate. Loop the chain end through the lift shackle on the rear bumper and thread back through the eyelet opening in the tailgate. Place the correct link from Table 2-10 in the grab hook.

5. Wrap the rear slings with padding where they contact the vehicle.

6. Secure all excess chain with tape or Type III nylon cord.

7. Cluster and tie or tape (breakaway technique) the sling legs in each sling set on top of the vehicle to prevent entanglement during hookup and lift-off.

Figure 2-9. M998 (HMMWV) With Two MRC-127 Stacks

2-12. M998/M1038 (HMMWV) With Lightweight Tactical Fire Control Systems (LTACFIRE)/Tactical Terminal Control Systems (TTCS)

a. Applicability. The following items in Table 2-11 are certified for the helicopter(s) listed in the following table by the US Army Soldier Systems Center:

Table 2-11. M998/M1038 With LTACFIRE/TTCS

NOMENCLATURE	MAX WEIGHT (POUNDS)	SLING SET	LINK COUNT FRONT/ REAR	TYPE OF AIRCRAFT	RECOMMENDED AIRSPEED (KNOTS)
LTACFIRE, Single Station	5,297	10K	40/3	CH-47	125
LTACFIRE, Dual Station	6,215	10K	40/3	CH-47	125
AN/TSQ-198 TTCS	6,015	10K	40/3	CH-47	100

b. Materials. The following materials are required to rig this load:

(1) Sling set (10,000-pound capacity) with one additional apex fitting.

(2) Tape, adhesive, pressure-sensitive, 2-inch wide roll.

(3) Cord, nylon, Type III, 550-pound breaking strength.

(4) Webbing, cotton, 1/4-inch, 80-pound breaking strength.

c. Personnel. Two persons can prepare and rig this load in 15 minutes.

d. Procedures. The following procedures apply to this load:

(1) Preparation. Prepare the load using the following steps:

(a) Fold mirrors forward in front of the windshield for added protection and tie together with Type III nylon cord. Remove the canvas cab top and the doors. Secure to the seats with Type III nylon cord.

(b) Secure all equipment and cargo inside the vehicle with tape, nylon cord, or lashings.

(c) Ensure the fuel tank is not over 3/4 full. Inspect fuel tank cap, oil filler cap, and battery caps for proper installation.

(d) Engage the vehicle parking brake and put the transmission in neutral.

(e) Ensure the front wheels are pointed straight ahead. Tie down the steering wheel, using the securing device attached under the dashboard.

(2) Rigging. Rig the load according to the steps in Figure 2-10.

(3) Hookup. The hookup team stands in the bed of the vehicle. The static wand person discharges the static electricity with the static wand. The forward hookup person places apex fitting 1 onto the forward cargo hook. The aft hookup person places apex fitting 2 onto the aft cargo hook. The hookup team then carefully dismounts the vehicle and remains close to the load as the helicopter removes slack from the sling legs. When successful hookup is assured, the hookup team quickly exits the area underneath the helicopter to the designated rendezvous point.

(4) Derigging. Derigging is the reverse of the preparation and rigging procedures in steps d (1) and d (2).

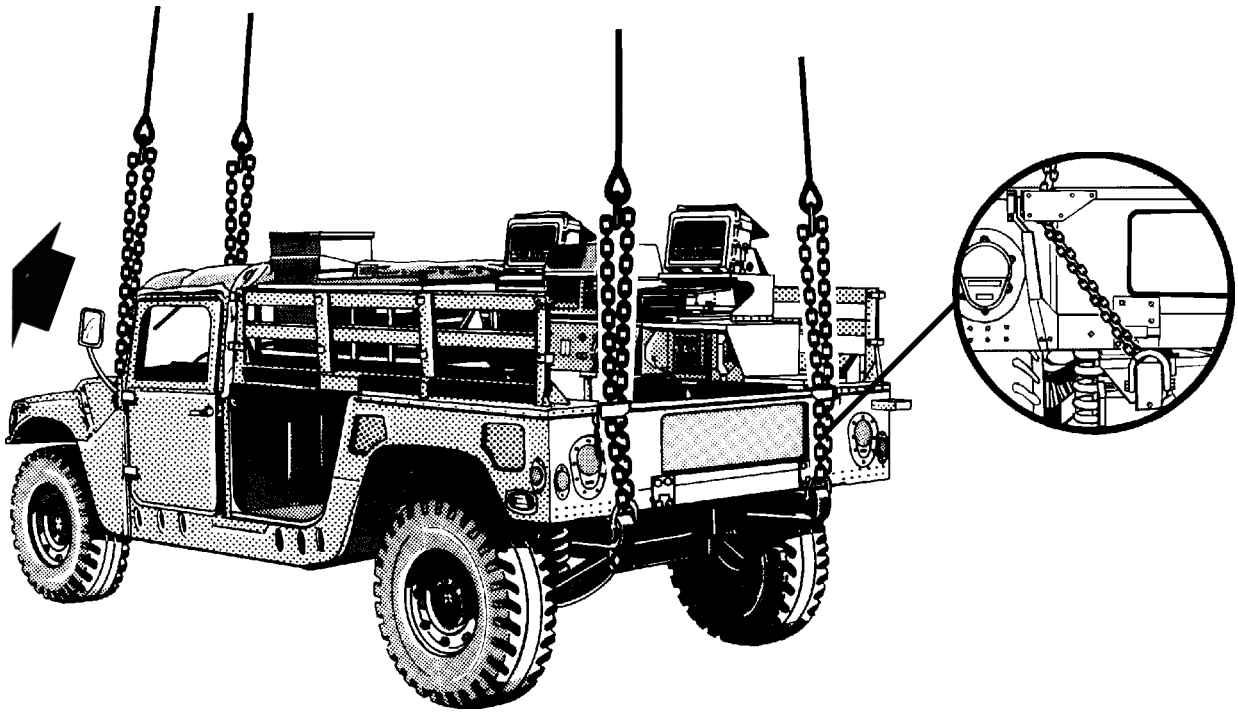

RIGGING STEPS

1. Connect 2 sling legs to apex fitting number 1. Position the apex fitting on the hood of the vehicle.

2. Loop the chain end of the sling legs through their respective lift provisions that protrudes through the hood. Place the correct link from Table 2-11 in the grab hook.

3. Connect 2 sling legs to apex fitting number 2. Position the apex fitting in the cargo bed of the vehicle.

4. Loop the chain end of the sling legs through their respective eyelet openings in the upper corner of the tailgate. Loop the chain end through the lift shackle on the rear bumper and thread back through the eyelet opening in the tailgate. Place the correct link from Table 2-11 in the grab hook.

5. Secure all excess chain with tape or Type III nylon cord.

6. Cluster and tie or tape (breakaway technique) the sling legs in each sling set on top of the vehicle to prevent entanglement during hookup and lift-off.

Figure 2-10. M998/M1038 With LTACFIRE/TTCS

2-13. M1037 (HMMWV) With AN/TPQ-36 Firefinder Generator Pallet

a. Applicability. The following item in Table 2-12 is certified for the helicopter(s) listed in the following table by the US Army Soldier Systems Center:

Table 2-12. M1037 (HMMWV) With AN/TPQ-36 Firefinder Generator Pallet

NOMENCLATURE	MAX WEIGHT (POUNDS)	SLING SET	LINK COUNT FRONT/ REAR	TYPE OF AIRCRAFT	RECOMMENDED AIRSPEED (KNOTS)
AN/TPQ-36 Firefinder Generator Pallet	7,700	10K	80/45	CH-47	110

b. Materials. The following materials are required to rig this load:

(1) Sling set (10,000-pound capacity) with one additional apex fitting.

(2) Tape, adhesive, pressure-sensitive, 2-inch wide roll.

(3) Cord, nylon, Type III, 550-pound breaking strength.

(4) Webbing, cotton, 1/4-inch, 80-pound breaking strength.

c. Personnel. Two persons can prepare and rig this load in 15 minutes.

d. Procedures. The following procedures apply to this load:

(1) Preparation. Prepare the load using the following steps:

(a) Fold mirrors forward in front of the windshield for added protection and tie together with Type III nylon cord. Remove the canvas cab top and the doors. Secure to the seats with Type III nylon cord.

(b) Ensure the generator is secured to the truck. Secure all lids, doors, and vents on the generator with tape or Type III nylon cord. Safety tie all chains and hoses with tape or Type III nylon cord.

(c) Secure all equipment and cargo inside the vehicle with tape, nylon cord, or lashings.

(d) Ensure the fuel tank is not over 3/4 full. Inspect fuel tank cap, oil filler cap, and battery caps for proper installation.

(e) Engage the vehicle parking brake and put the transmission in neutral.

(f) Ensure the front wheels are pointed straight ahead. Tie down the steering wheel, using the securing device attached under the dashboard.

(g) Tape the windshield in an X formation from corner to corner.

(2) Rigging. Rig the load according to the steps in Figure 2-11.

(3) Hookup. The hookup team stands in the bed of the vehicle. The static wand person discharges the static electricity with the static wand. The forward hookup person places apex fitting 1 onto the forward cargo hook. The aft hookup person places apex fitting 2 onto the aft cargo hook. The hookup team then carefully dismounts the vehicle and remains close to the load as the helicopter removes slack from the sling legs. When successful hookup is assured, the hookup team quickly exits the area underneath the helicopter to the designated rendezvous point.

(4) Derigging. Derigging is the reverse of the preparation and rigging procedures in steps d (1) and d (2).

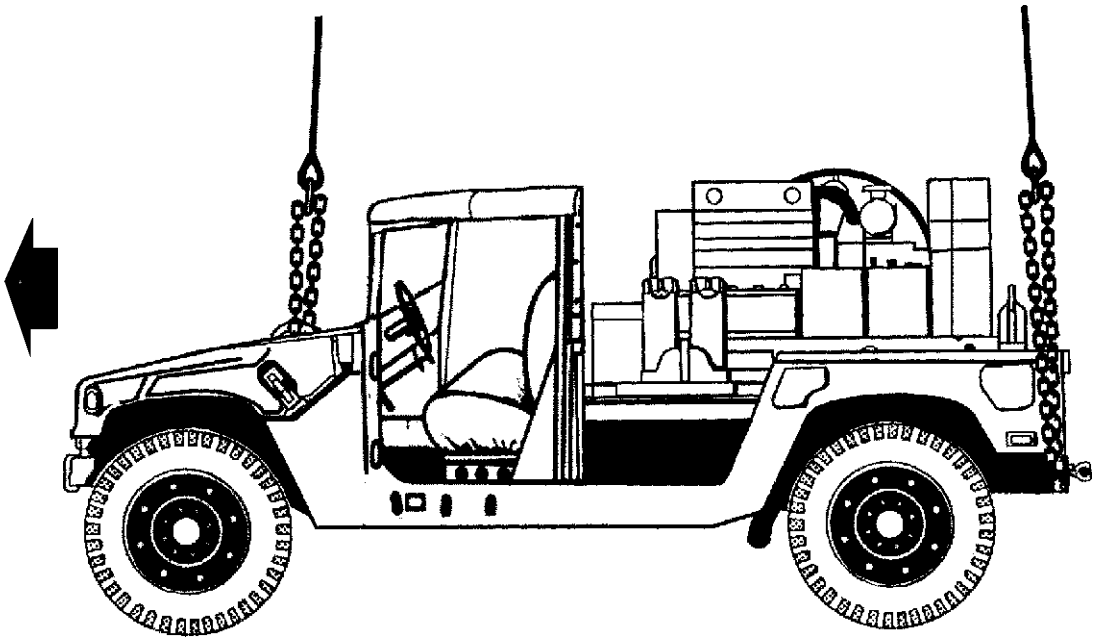

RIGGING STEPS

1. Connect 2 sling legs to apex fitting number 1. Position the apex fitting on the hood of the vehicle.

2. Loop the chain end of the sling legs through their respective lift provisions that protrudes through the hood. Place the correct link from Table 2-12 in the grab hook.

3. Connect 2 sling legs to apex fitting number 2. Position the apex fitting in the cargo bed of the vehicle.

4. Loop the chain end of the sling legs through their respective lift shackle on the outside end of the rear bumper. Place the correct link from Table 2-12 in the grab hook.

5. Secure all excess chain with tape or Type III nylon cord.

6. Cluster and tie or tape (breakaway technique) the sling legs in each sling set on top of the vehicle to prevent entanglement during hookup and lift-off.

Figure 2-11. M1037 (HMMWV) With AN/TPQ-36 Firefinder Generator Pallet

CAUTION

Do not use the lift shackles located near the center of the rear bumper for sling load lift provisions.

2-14. M1097 (HMMWV) With High Mobility Digital Group Multiplexer (DGM) Auxiliary Equipment Transportation Container (AETC) in 2 and 3 Mast Configurations

a. Applicability. The following items in Table 2-13 are certified for the helicopter(s) listed in the following table by the US Army Soldier Systems Center:

Table 2-13. M1097 (HMMWV) With High Mobility Digital Group Multiplexer (DGM) Auxiliary Equipment Transportation Container (AETC) in 2 and 3 Mast Configurations

NOMENCLATURE	MAX WEIGHT (POUNDS)	SLING SET	LINK COUNT FRONT/ REAR	TYPE OF AIRCRAFT	RECOMMENDED AIRSPEED (KNOTS)
2 Mast AETC Configuration	8,500	10K	55/3	CH-47	120
3 Mast AETC Configuration	9,500	10K	55/3	CH-47	120

b. Materials. The following materials are required to rig this load:

(1) Sling set (10,000-pound capacity) with one additional apex fitting.

(a) Chain length, part number 38850-00053-101, from a 10,000-pound capacity sling set (4 each).

(b) Coupling link, part number 577-0615, from a 10,000-pound capacity sling set (4 each).

(2) Tape, adhesive, pressure-sensitive, 2-inch wide roll.

(3) Cord, nylon, Type III, 550-pound breaking strength.

(4) Webbing, cotton, 1/4-inch, 80-pound breaking strength.

(5) Felt sheet, cattle hair, Type IV, 1/2-inch or suitable padding.

c. Personnel. Two persons can prepare and rig this load in 15 minutes.

d. Procedures. The following procedures apply to this load:

(1) Preparation. Prepare the load using the following steps:

(a) Extend the sling leg chains by connecting one additional chain length to each chain on a 10,000- pound capacity sling set with coupling links.

(b) Fold mirrors forward in front of the windshield for added protection and tie together with Type III nylon cord. Remove the canvas cab top and the doors. Secure to the seats with Type III nylon cord.

(c) Remove, fold, stow, and secure the canvas cover for the AETC using Type III nylon cord.

(d) Secure all equipment and cargo inside the vehicle with tape, Type III nylon cord, or lashings.

(e) Ensure the fuel tank is not over 3/4 full. Inspect fuel tank cap, oil filler cap, and battery caps for proper installation.

(f) Engage the vehicle parking brake and put the transmission in neutral.

(g) Ensure the front wheels are pointed straight ahead. Tie down the steering wheel, using the securing device attached under the dashboard.

(2) Rigging. Rig the load according to the steps in Figure 2-12.

(3) Hookup. The hookup team stands on top of the container. The static wand person discharges the static

electricity with the static wand. The forward hookup person places apex fitting 1 onto the forward cargo hook. The aft hookup person places apex fitting 2 onto the aft cargo hook. The hookup team then carefully dismounts the vehicle and remains close to the load as the helicopter removes slack from the sling legs. When successful hookup is assured, the hookup team quickly exits the area underneath the helicopter to the designated rendezvous point.

(4) Derigging. Derigging is the reverse of the preparation and rigging procedures in steps d (1) and d (2).

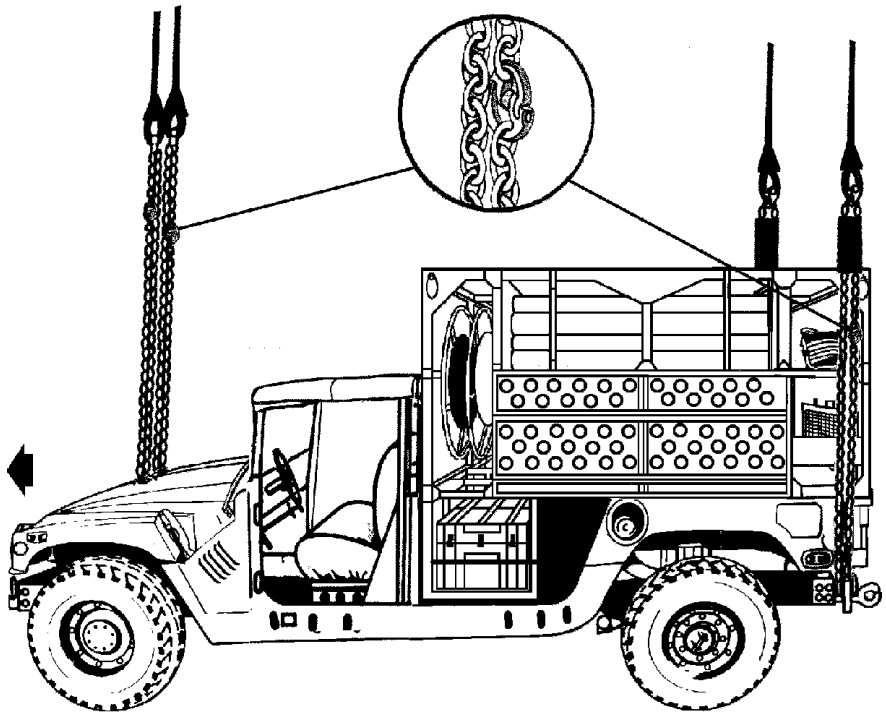

RIGGING STEPS

1. Connect 2 sling legs to apex fitting number 1. Position the apex fitting on the hood of the vehicle.

2. Loop the chain end of the sling legs through their respective lift provisions that protrudes through the hood. Place the correct link from Table 2-13 in the grab hook.

3. Connect 2 sling legs to apex fitting number 2. Position the apex fitting in the cargo bed of the vehicle.

4. Loop the chain end of the sling legs through their respective lift shackle on the outside end of the rear bumper. Place the correct link from Table 2-13 in the grab hook.

5. Secure all excess chain with tape or Type III nylon cord.

6. Wrap the rear slings with padding where they contact the vehicle.

7. Cluster and tie or tape (breakaway technique) the sling legs in each sling set on top of the vehicle to prevent entanglement during hookup and lift-off.

Figure 2-12. M1097 (HMMWV) With 2 or 3 Mast AETC Configuration

CAUTION

Do not use the lift shackles located near the center of the rear bumper for sling load lift provisions.

2-15. M1097 (HMMWV) With Contact Maintenance Truck, Heavy (CMTH)

a. Applicability. The following items in Table 2-14 are certified for the helicopter(s) listed in the following table by the US Army Soldier Systems Center:

Table 2-14. M1097 (HMMWV) With Contact Maintenance Truck, Heavy (CMTH)

NOMENCLATURE	MAX WEIGHT (POUNDS)	SLING SET	LINK COUNT FRONT/ REAR	TYPE OF AIRCRAFT	RECOMMENDED AIRSPEED (KNOTS)
CMTH, Shop Equipment (SE) on M1097	8,760	10K	50/3	CH-47	120
CMTH, Aviation Section (AS) on M1097	9,400	10K	50/3	CH-47	100

b. Materials. The following materials are required to rig this load:

(1) Sling set (10,000-pound capacity) with one additional apex fitting.

(a) Chain length, part number 38850-00053-101, from a 10,000-pound capacity sling set (4 each).

(b) Coupling link, part number 577-0615, from a 10,000-pound capacity sling set (4 each).

(2) Tape, adhesive, pressure-sensitive, 2-inch wide roll.

(3) Cord, nylon, Type III, 550-pound breaking strength.

(4) Webbing, cotton, 1/4-inch, 80-pound breaking strength.

(5) Felt sheet, cattle hair, Type IV, 1/2-inch or suitable padding.

c. Personnel. Two persons can prepare and rig this load in 15 minutes.

d. Procedures. The following procedures apply to this load:

(1) Preparation. Prepare the load using the following steps:

(a) Extend the sling leg chains by connecting one additional chain length to each chain on a 10,000- pound capacity sling set with coupling links.

(b) Fold mirrors forward in front of the windshield for added protection and tie together with Type III nylon cord. Secure the doors.

(c) Ensure the shelter is securely attached to the vehicle.

(d) Secure all equipment and cargo inside the vehicle with tape, Type III nylon cord, or lashings.

(e) Secure all equipment, doors, and drawers inside the shelter with tape, Type III nylon cord, or lashings. Close and secure all shelter doors and vents with tape or Type III nylon cord.

(f) Ensure the fuel tank is not over 3/4 full. Inspect fuel tank cap, oil filler cap, and battery caps for proper installation.

(g) Engage the vehicle parking brake and put the transmission in neutral.

(h) Ensure the front wheels are pointed straight ahead. Tie down the steering wheel, using the securing device attached under the dashboard.

(i) Install the lift provisions on the outer ends of the bumper.

(2) Rigging. Rig the load according to the steps in Figure 2-13.

(3) Hookup. The hookup team stands on top of the cargo bed cover. The static wand person discharges the static electricity with the static wand. The forward hookup person places apex fitting 1 onto the forward cargo hook. The aft hookup person places apex fitting 2 onto the aft cargo hook. The hookup team then carefully dismounts the vehicle and remains close to the load as the helicopter removes slack from the sling legs. When successful hookup is assured, the hookup team quickly exits the area underneath the helicopter to the designated rendezvous point.

(4) Derigging. Derigging is the reverse of the preparation and rigging procedures in steps d (1) and d (2).

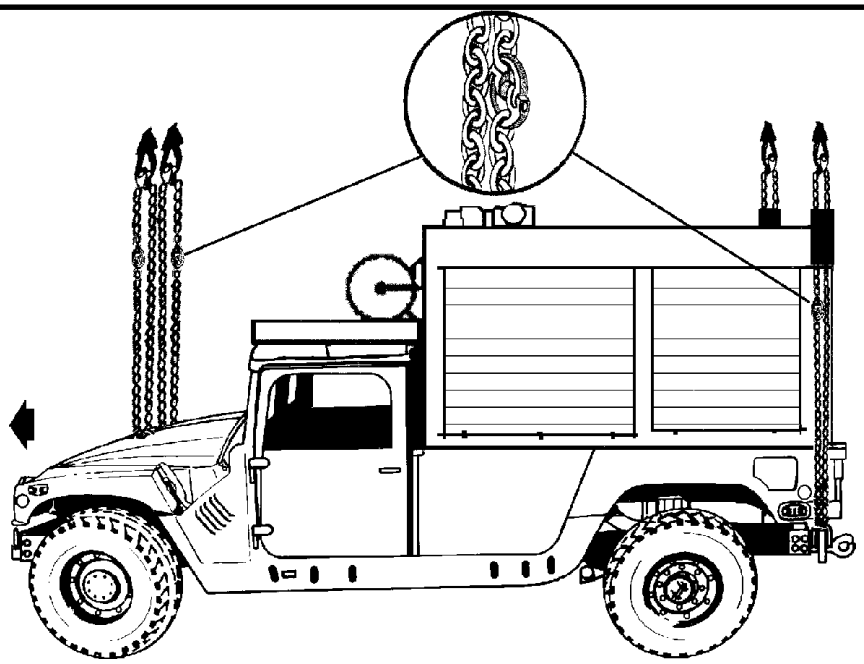

RIGGING STEPS

1. Connect 2 sling legs to apex fitting number 1. Position the apex fitting on the hood of the vehicle.

2. Loop the chain end of the sling legs through their respective lift provisions that protrudes through the hood. Place the correct link from Table 2-14 in the grab hook.

3. Connect 2 sling legs to apex fitting number 2. Position the apex fitting on top of the shelter.

4. Loop the chain end of the sling legs through their respective lift provisions located on the outer ends of the rear bumper. Place the correct link from Table 2-14 in the grab hook.

5. Wrap the rear slings with padding where they contact the vehicle sides.

6. Secure all excess chain with tape or Type III nylon cord.

7. Cluster and tie or tape (breakaway technique) the sling legs in each sling set on top of the vehicle to prevent entanglement during hookup and lift-off.

Figure 2-13. M1097 (HMMWV) With Contact Maintenance Truck, Heavy (CMTH)

CAUTION

Do not use the lift shackles located near the center of the rear bumper for sling load lift provisions.

2-16. M998 HMMWV With Man Portable Air Defense Systems (MANPADS)

a. Applicability. The following item in Table 2-15 is certified for the helicopter(s) listed in the following table by the US Army Soldier Systems Center:

Table 2-15. M998 HMMWV With Man Portable Air Defense Systems

NOMENCLATURE	MAX WEIGHT (POUNDS)	SLING SET	LINK COUNT FRONT/ REAR	TYPE OF AIRCRAFT	RECOMMENDED AIRSPEED (KNOTS)
Man Portable Air Defense Systems on M998	7,700	10K	40/3	CH-47	125

b. Materials. The following materials are required to rig this load:

(1) Sling set (10,000-pound capacity) with one additional apex fitting.

(2) Tape, adhesive, pressure-sensitive, 2-inch wide roll.

(3) Cord, nylon, Type III, 550-pound breaking strength.

(4) Webbing, cotton, 1/4-inch, 80-pound breaking strength.

c. Personnel. Two persons can prepare and rig this load in 15 minutes.

d. Procedures. The following procedures apply to this load:

(1) Preparation. Prepare the load using the following steps:

(a) Fold mirrors forward in front of the windshield for added protection and tie together with Type III nylon cord. Secure the doors.

(b) Secure all equipment and cargo inside the vehicle with tape, Type III nylon cord, or lashings.

(c) Ensure the fuel tank is not over 3/4 full. Inspect fuel tank cap, oil filler cap, and battery caps for proper installation.

(d) Engage the vehicle parking brake and put the transmission in neutral.

(e) Ensure the front wheels are pointed straight ahead. Tie down the steering wheel, using the securing device attached under the dashboard.

(2) Rigging. Rig the load according to the steps in Figure 2-14.

(3) Hookup. The static wand person discharges the static electricity with the static wand. The forward hookup person places apex fitting 1 onto the forward cargo hook. The aft hookup person places apex fitting 2 onto the aft cargo hook. The hookup team then carefully dismounts the vehicle and remains close to the load as the helicopter removes slack from the sling legs. When successful hookup is assured, the hookup team quickly exits the area underneath the helicopter to the designated rendezvous point.

(4) Derigging. Derigging is the reverse of the preparation and rigging procedures in steps d (1) and d (2).

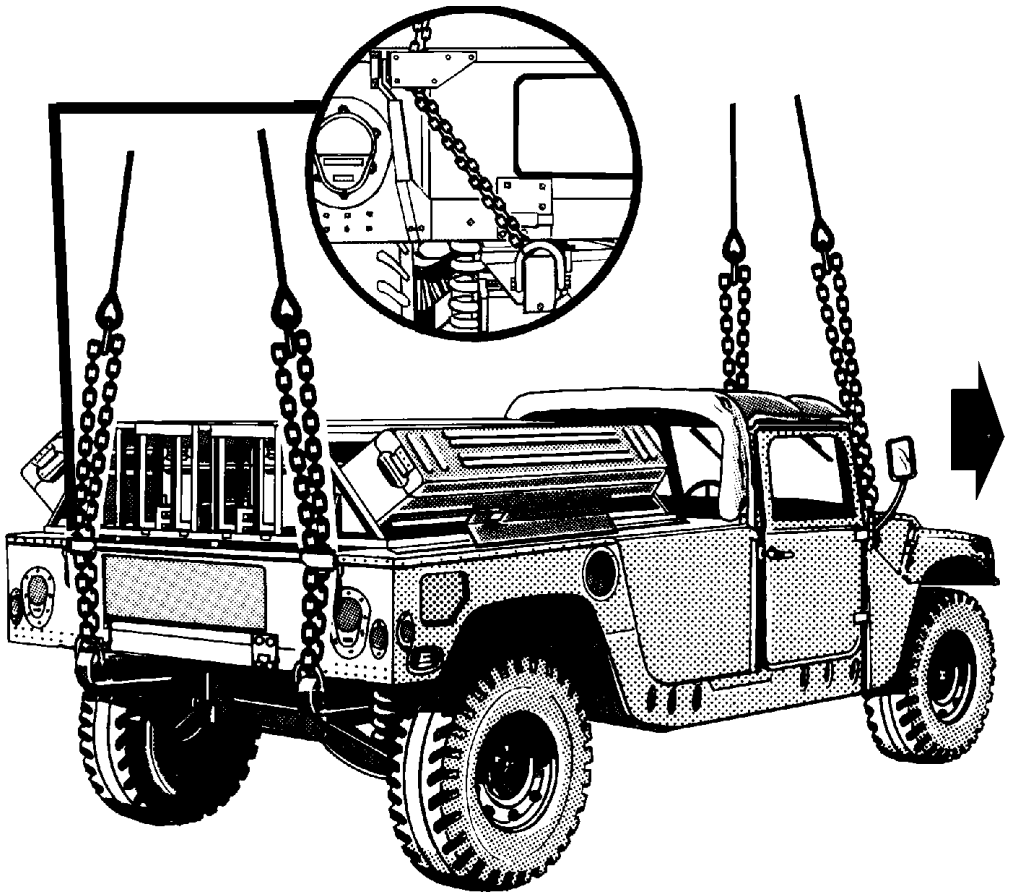

RIGGING STEPS

1. Connect 2 sling legs to apex fitting number 1. Position the apex fitting on the hood of the vehicle.

2. Loop the chain end of the sling legs through their respective lift provisions that protrudes through the hood. Place the correct link from Table 2-15 in the grab hook.

3. Connect 2 sling legs to apex fitting number 2. Position the apex fitting on top of the shelter.

4. Loop the chain end of the sling legs through their respective eyelet openings in the upper corner of the tailgate. Loop the chain end through the lift shackle on the rear bumper and thread back through the eyelet opening in the tailgate. Place the correct link from Table 2-15 in the grab hook.

5. Secure all excess chain with tape or Type III nylon cord.

6. Cluster and tie or tape (breakaway technique) the sling legs in each sling set on top of the vehicle to prevent entanglement during hookup and lift-off.

Figure 2-14. M998 HMMWV With Man Portable Air Defense Systems

2-17. M1097 (H-HMMWV) With AN/TPQ-42, Meteorological Hydrogen Generator (MHG)

a. Applicability. The following items in Table 2-16 are certified for the helicopter(s) listed in the following table by the US Army Soldier Systems Center:

Table 2-16. M1097 (H-HMMWV) With AN/TPQ-42, Meteorological Hydrogen Generator (MHG)

NOMENCLATURE	MAX WEIGHT (POUNDS)	SLING SET	LINK COUNT FRONT/ REAR	TYPE OF AIRCRAFT	RECOMMENDED AIRSPEED (KNOTS)
AN/TPQ-42, Meteorological Hydrogen Generator (MHG)	10,000	10K	40/3	CH-47	120
AN/TPQ-42, Meteorological Hydrogen Generator (MHG)	10,000	15K	25/3	CH-53	120

b. Materials. The following materials are required to rig this load:

(1) Sling set (10,000-pound capacity) with one additional apex fitting.

OR

(2) Multileg sling set (15,000-pound capacity for the CH-53 only) with one additional web ring.

(3) Tape, adhesive, pressure-sensitive, 2-inch wide roll.

(4) Cord, nylon, Type III, 550-pound breaking strength.

(5) Webbing, cotton, 1/4-inch, 80-pound breaking strength.

c. Personnel. Three persons can prepare and rig this load in 20 minutes.

d. Procedures. The following procedures apply to this load:

(1) Preparation. Prepare the load using the following steps:

(a) Fold mirrors forward in front of the windshield for added protection and tie together with Type III nylon cord.

(b) Secure all equipment and cargo inside the vehicle with tape, nylon cord, or lashings. Secure the doors shut if installed.

(c) Ensure the fuel tank is not over 3/4 full. Inspect fuel tank cap, oil filler cap, and battery caps for proper installation.

(d) Engage the vehicle parking brake and put the transmission in neutral.

(e) Ensure the front wheels are pointed straight ahead. Tie down the steering wheel, using the securing device attached under the dashboard.

(2) Rigging. Rig the load according to the steps in Figure 2-15.

(3) Hookup. The hookup team stands in the rear of the vehicle. The static wand person discharges the static electricity with the static wand. The forward hookup person places apex fitting 1 onto the forward cargo hook. The aft hookup person places apex fitting 2 onto the aft cargo hook. The hookup team then carefully dismounts the vehicle and remains close to the load as the helicopter removes slack from the sling legs. When successful hookup is assured, the hookup team quickly exits the area underneath the helicopter to the designated rendezvous point.

(4) Derigging. Derigging is the reverse of the preparation and rigging procedures in steps d (1) and d (2).

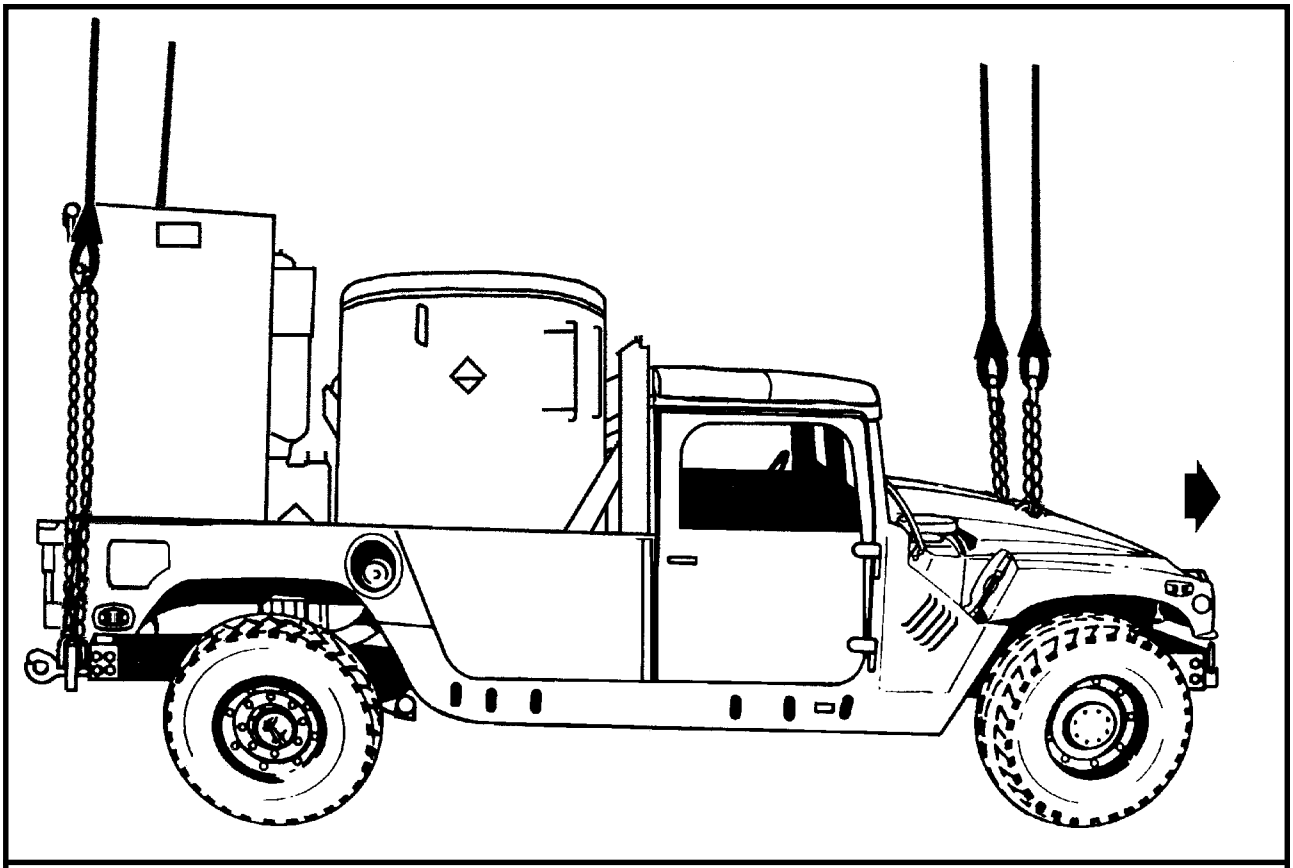

RIGGING STEPS

1. Connect 2 sling legs to apex fitting number 1. Position the apex fitting on the hood of the vehicle.

2. Loop the chain end of the sling legs through their respective lift provisions that protrudes through the hood. Place the correct link from Table 2-16 in the grab hook.

3. Connect 2 sling legs to apex fitting number 2. Position the apex fitting in the bed of the vehicle.

4. Loop the chain end of the sling legs through their respective lift shackle on the outside end of the rear bumper. Place the correct link from Table 2-16 in the grab hook.

5. Secure all excess chain with tape or Type III nylon cord.

6. Cluster and tie or tape (breakaway technique) the sling legs in each sling set on top of the vehicle to prevent entanglement during hookup and lift-off.

Figure 2-15. M1097 (H-HMMWV) With AN/TPQ-42, Meteorological Hydrogen Generator (MHG)

CAUTION

Do not use the lift shackles located near the center of the rear bumper for sling load lift provisions.

2-18. M1097 (H-HMMWV) With Enhanced Fiber Optic Guided Missile (EFOGM) Launcher

a. Applicability. The following item in Table 2-17 is certified for the helicopter(s) listed in the following table by the US Army Soldier Systems Center:

Table 2-17. M1097 (H-HMMWV) With Enhanced Fiber Optic Guided Missile (EFOGM) Launcher

NOMENCLATURE	MAX WEIGHT (POUNDS)	SLING SET	LINK COUNT FRONT/ REAR	TYPE OF AIRCRAFT	RECOMMENDED AIRSPEED (KNOTS)
Enhanced Fiber Optic Guided Missile Launcher with 8 Missiles	9,400	10K	55/3	CH-47	120

b. Materials. The following materials are required to rig this load:

(1) Sling set (10,000-pound capacity) with one additional apex fitting.

(2) Tape, adhesive, pressure-sensitive, 2-inch wide roll.

(3) Cord, nylon, Type III, 550-pound breaking strength.

(4) Webbing, cotton, 1/4-inch, 80-pound breaking strength.

(5) Felt sheet, cattle hair, Type IV, 1/2-inch or suitable substitute.

(6) Strap, tiedown, cargo, CGU-1/B (as required).

c. Personnel. Two persons can prepare and rig this load in 15 minutes.

d. Procedures. The following procedures apply to this load:

(1) Preparation. Prepare the load using the following steps:

(a) Fold mirrors forward in front of the windshield for added protection and tie together with Type III nylon cord.

(b) Remove the cab doors. Stow and secure the doors against the rear of the seats with the tiedown straps. Tape the windshield, mirrors, and all glass items.

(c) Ensure the fuel tank is not over 3/4 full. Inspect fuel tank cap (should be in the vent position), oil filler cap, and battery caps for proper installation.

(d) Engage the vehicle parking brake and put the transmission in neutral.

(e) Ensure the front wheels are pointed straight ahead. Tie down the steering wheel, using the securing device attached under the dashboard.

(f) Ensure the launcher is securely attached to the truck. Secure all wiring and loose equipment on the launcher with tape, Type III nylon cord, or tiedown straps.

(2) Rigging. Rig the load according to the steps in Figure 2-16.

(3) Hookup. The hookup team stands on top of the launcher. The static wand person discharges the static electricity with the static wand. The forward hookup person places apex fitting 1 onto the forward cargo hook. The aft hookup person places apex fitting 2 onto the aft cargo hook. The hookup team then carefully dismounts the vehicle and remains close to the load as the helicopter removes slack from the sling legs. When successful hookup is assured, the hookup team quickly exits the area underneath the helicopter to the designated rendezvous point.

(4) Derigging. Derigging is the reverse of the preparation and rigging procedures in steps d (1) and d (2).

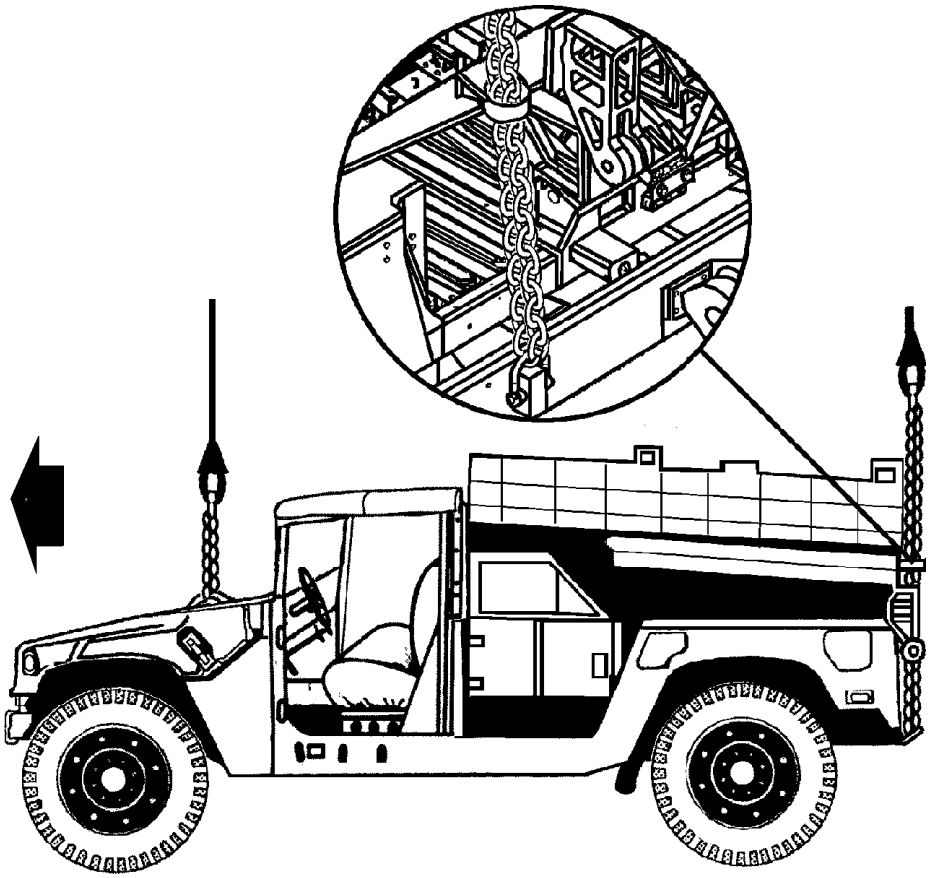

RIGGING STEPS

1. Connect 2 sling legs to apex fitting number 1. Position the apex fitting on the hood of the vehicle.

2. Loop the chain end of the sling legs through their respective lift provisions that protrudes through the hood. Place the correct link from Table 2-17 in the grab hook.

3. Connect 2 sling legs to apex fitting number 2. Position the apex fitting on top of the launcher.

4. Pass the left chain end of the sling leg through the left sling guide located on the rear of the launcher. Loop the chain end of the sling leg through the left lift provision located inboard on the bumper. Pass the chain end back through the sling guide. Place the correct link from Table 2-17 in the grab hook. Repeat the procedure using the right sling leg, right sling guide, and the right lift provision.

5. Secure all excess chain with tape or Type III nylon cord.

6. Pad the chain and sling leg where they contact the sling leg guide and missile.

7. Cluster and tie or tape (breakaway technique) the sling legs in each sling set on top of the vehicle to prevent entanglement during hookup and lift-off.

Figure 2-16. M1097 (H-HMMWV) With Enhanced Fiber Optic Guided Missile (EFOGM) Launcher

2-19. M1097A2 (H-HMMWV) With the Secure Mobile Anti-Jam Tactical Terminal (SMART-T)

a. Applicability. The following item in Table 2-18 is certified for the helicopter(s) listed in the following table by the US Army Soldier Systems Center:

Table 2-18. M1097A2 (H-HMMWV) With the Secure Mobile Anti-Jam Tactical Terminal (SMART-T)

NOMENCLATURE	MAX WEIGHT (POUNDS)	SLING SET	LINK COUNT FRONT/ REAR	TYPE OF AIRCRAFT	RECOMMENDED AIRSPEED (KNOTS)
Secure Mobile Anti-Jam Tactical Terminal (SMART-T)	8,540	10K	30/3	CH-47	120

b. Materials. The following materials are required to rig this load:

(1) Sling set (10,000-pound capacity) with one additional apex fitting.

(2) Tape, adhesive, pressure-sensitive, 2-inch wide roll.

(3) Cord, nylon, Type III, 550-pound breaking strength.

(4) Webbing, cotton, 1/4-inch, 80-pound breaking strength.

(5) Felt sheet, cattle hair, Type IV, 1/2-inch or suitable substitute.

(6) Strap, tiedown, cargo, CGU-1/B (as required).

c. Personnel. Two persons can prepare and rig this load in 15 minutes.

d. Procedures. The following procedures apply to this load:

(1) Preparation. Prepare the load using the following steps:

(a) Fold mirrors forward in front of the windshield for added protection and tie together with Type III nylon cord.

(b) Remove the cab doors. Stow and secure the doors against the rear of the seats with the tiedown straps. Tape the windshield, mirrors, and all glass items.

(c) Ensure the fuel tank is not over 3/4 full. Inspect fuel tank cap (should be in the vent position), oil filler cap, and battery caps for proper installation.

(d) Engage the vehicle parking brake and put the transmission in neutral.

(e) Ensure the front wheels are pointed straight ahead. Tie down the steering wheel, using the securing device attached under the dashboard.

(f) Ensure the two fuel cans on the rear of the pallet are locked in place. Secure all loose equipment on the pallet with tape or Type III nylon cord.

(g) Secure the antenna dish.

(2) Rigging. Rig the load according to the steps in Figure 2-17.

(3) Hookup. The hookup team stands on truck. The static wand person discharges the static electricity with the static wand. The forward hookup person places apex fitting 1 onto the forward cargo hook. The aft hookup person places apex fitting 2 onto the aft cargo hook. The hookup team then carefully dismounts the vehicle and remains close to the load as the helicopter removes slack from the sling legs. When successful hookup is assured, the hookup team quickly exits the area underneath the helicopter to the designated rendezvous point.

(4) Derigging. Derigging is the reverse of the preparation and rigging procedures in steps d (1) and d (2).

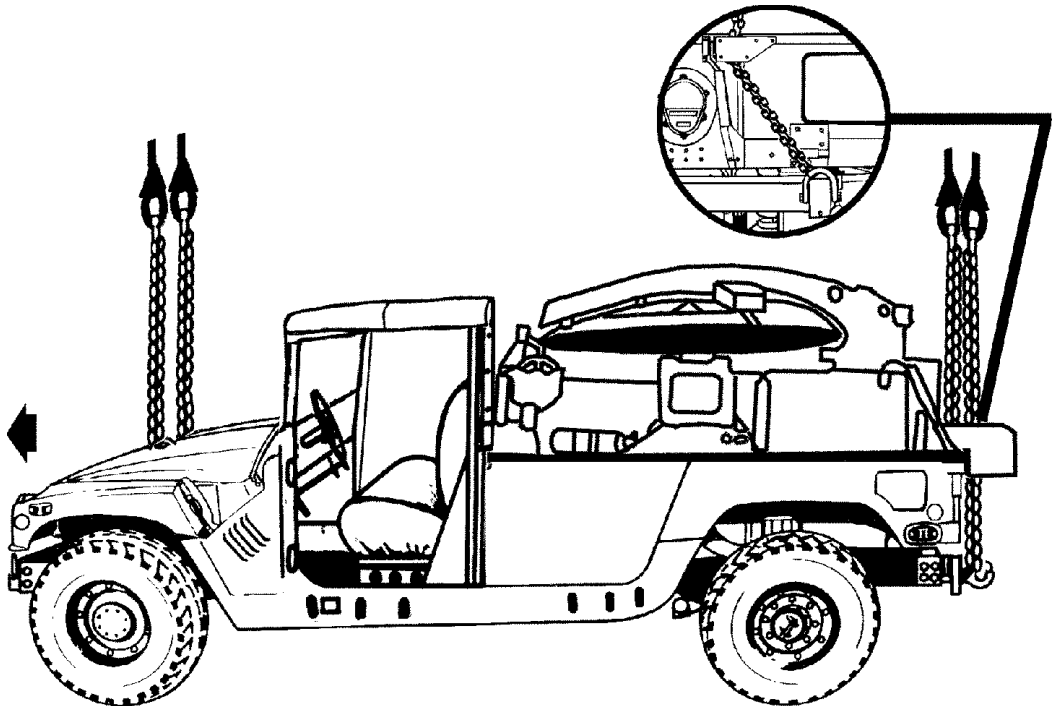

RIGGING STEPS

1. Connect 2 sling legs to apex fitting number 1. Position the apex fitting on the hood of the vehicle.

2. Loop the chain end of the sling legs through their respective lift provisions that protrudes through the hood. Place the correct link from Table 2-18 in the grab hook.

3. Connect 2 sling legs to apex fitting number 2. Position the apex fitting on top of the pallet.

4. Loop the chain end of the sling legs through their respective eyelet openings in the upper corner of the tailgate. Loop the chain end through the lift shackle on the rear bumper and thread back through the eyelet opening in the tailgate. Place the correct link from Table 2-18 in the grab hook.

5. Secure all excess chain with tape or Type III nylon cord.

6. Cluster and tie or tape (breakaway technique) the sling legs in each sling set on top of the vehicle to prevent entanglement during hookup and lift-off.

Figure 2-17. M1097A2 (H-HMMWV) With the Secure Mobile Anti-Jam Tactical Terminal (SMART-T)

2-20. Dual HMMWVs, Side by Side (Shotgun Method)

a. Applicability. The following items in Table 2-19 are certified for the helicopter(s) listed in the following table by the US Army Soldier Systems Center:

Table 2-19. Dual HMMWVs, Side by Side (Shotgun Method)

NOMENCLATURE	MAX WEIGHT (POUNDS)	SLING SET	LINK COUNT FRONT/ REAR	TYPE OF AIRCRAFT	RECOMMENDED AIRSPEED (KNOTS)
Cargo Troop Carrier, M998/M1038	8,400	10K 15K	Listed in Rigging Steps	CH-47 CH-53	125
Cargo Troop Carrier, M998A1/M1038A1	7,880	10K 15K	Listed in Rigging Steps	CH-47 CH-53	125
Armament Carrier, M1025/M1026/M1025A1/ M1026A1/M1043/M1044	8,400	10K 15K	Listed in Rigging Steps	CH-47 CH-53	125
Armament Carrier, M1025A2	10,000	10K 15K	Listed in Rigging Steps	CH-47 CH-53	125
Armament Carrier, M1043A1/M1044A1	8,580	10K 15K	Listed in Rigging Steps	CH-47 CH-53	125
Armament Carrier, M1043A2	10,000	10K 15K	Listed in Rigging Steps	CH-47 CH-53	125
Tow Missile Carrier, M966/M966A1/M1036/M1045/ M1046	8,400	10K 15K	Listed in Rigging Steps	CH-47 CH-53	125
Tow Missile Carrier, M1045A1/M1046A1	8,580	10K 15K	Listed in Rigging Steps	CH-47 CH-53	125
Tow Missile Carrier, M1045A2	10,000	10K 15K	Listed in Rigging Steps	CH-47 CH-53	125
M1037 Modified	9,400	10K 15K	Listed in Rigging Steps	CH-47 Ch-53	125
Shelter Carrier, M1097/M1097A1/M1097A2	10,000	10K 15K	Listed in Rigging Steps	CH-47 CH-53	125
M1123 HMMWV	10,000	10K 15K	Listed in Rigging Steps	CH-47 CH-53	125

WARNING
ONLY HMMWVs WITH THE 3/4-INCH FRONT LIFT PROVISIONS ARE CERTIFIED FOR SLING LOADING IN THE SIDE BY SIDE (SHOTGUN METHOD).

WARNING

HMMWVs WITH A MANUFACTURER'S SERIAL NUMBER OF LESS THAN 100000 ARE EQUIPPED WITH THE 5/8-INCH FRONT LIFT PROVISIONS BY THE MANUFACTURER BUT CAN BE CHANGED TO THE 3/4-INCH FRONT LIFT PROVISIONS BY QUALIFIED MAINTENANCE PERSONNEL. HMMWVs WITH A MANUFACTURER'S SERIAL NUMBER OF 100000 OR GREATER ARE EQUIPPED WITH THE 3/4-INCH FRONT LIFT PROVISIONS BY THE MANUFACTURER. PRIOR TO SLING LOADING HMMWVs IN THE SIDE BY SIDE (SHOTGUN) METHOD, VERIFY THAT THE HMMWVs ARE EQUIPPED WITH 3/4-INCH FRONT LIFT PROVISIONS BY CHECKING THE MANUFACTURER'S SERIAL NUMBER OR MEASURING THE DIAMETER OF THE FRONT LIFT PROVISION. THE HMMWV MANUFACTURER'S SERIAL NUMBER IS LOCATED ON A DATA PLATE ON THE LOWER RIGHT CORNER OF THE DRIVER'S SIDE DOOR OPENING.

CAUTION

DO NOT sling load (Shotgun Method) any HMMWV shelter carrier (M1097, M1037, etc.) with the shelter installed in the bed of the truck. Ensure all equipment in the bed of the truck is properly secured and does not interfer with the routing of the sling legs.

b. Materials. The following materials are required to rig this load:

(1) Sling set (10,000-pound capacity) (2 each).

OR

(2) Multileg sling set (15,000-pound capacity) for the CH-53 only.

(3) Tape, adhesive, pressure-sensitive, 2-inch wide roll.

(4) Cord, nylon, Type III, 550-pound breaking strength.

(5) Webbing, cotton, 1/4-inch, 80-pound breaking strength.

(6) Strap, tiedown, cargo, CGU-1/B (2 each).

c. Personnel. Four persons can prepare and rig this load in 15 minutes.

d. Procedures. The following procedures apply to this load:

(1) Preparation. Prepare the load using the following steps:

(a) Fold mirrors forward in front of the windshield for added protection and tie together with Type III nylon cord. Remove the canvas bedcovers from the vehicles. Fold and secure the canvas over the windshields with Type III nylon cord. Remove the doors and secure inside the vehicle.

(b) Secure all equipment and cargo inside the vehicles with tape, nylon cord, or lashings.

(c) Ensure the fuel tanks are not over 3/4 full. Inspect the fuel tank caps, oil filler caps, and battery caps for proper installation.

(d) Secure the vehicle camouflage net (in the bag) to each vehicle. Attach one camouflage net to the forward door post of one vehicle and the other camouflage net to the hard part of the body covering the fuel tank of the other vehicle.

(e) Position the vehicles, as close as possible, next

to each other. Ensure both vehicles are facing in the same direction.

(f) Engage the vehicle parking brakes and put the transmissions in neutral.

(g) Ensure the front wheels are pointed straight ahead. Tie down the steering wheel, using the securing device attached under the dashboard.

(2) Rigging. Rig the load according to the steps in Figure 2-18.

(3) Hookup. The hookup teams stand in the cargo bed and on the hood of the vehicles. The static wand person discharges the static electricity with the static wand. The forward hookup person places apex fitting 1 onto the forward cargo hook. The aft hookup person places apex fitting 2 onto the aft cargo hook. The hookup team then carefully dismounts the vehicle and remains close to theload as the helicopter removes slack from the sling legs. When successful hookup is assured, the hookup team quickly exits the area underneath the helicopter to the designated rendezvous point.

(4) Derigging. Derigging is the reverse of the preparation and rigging procedures in steps d (1) and d (2).

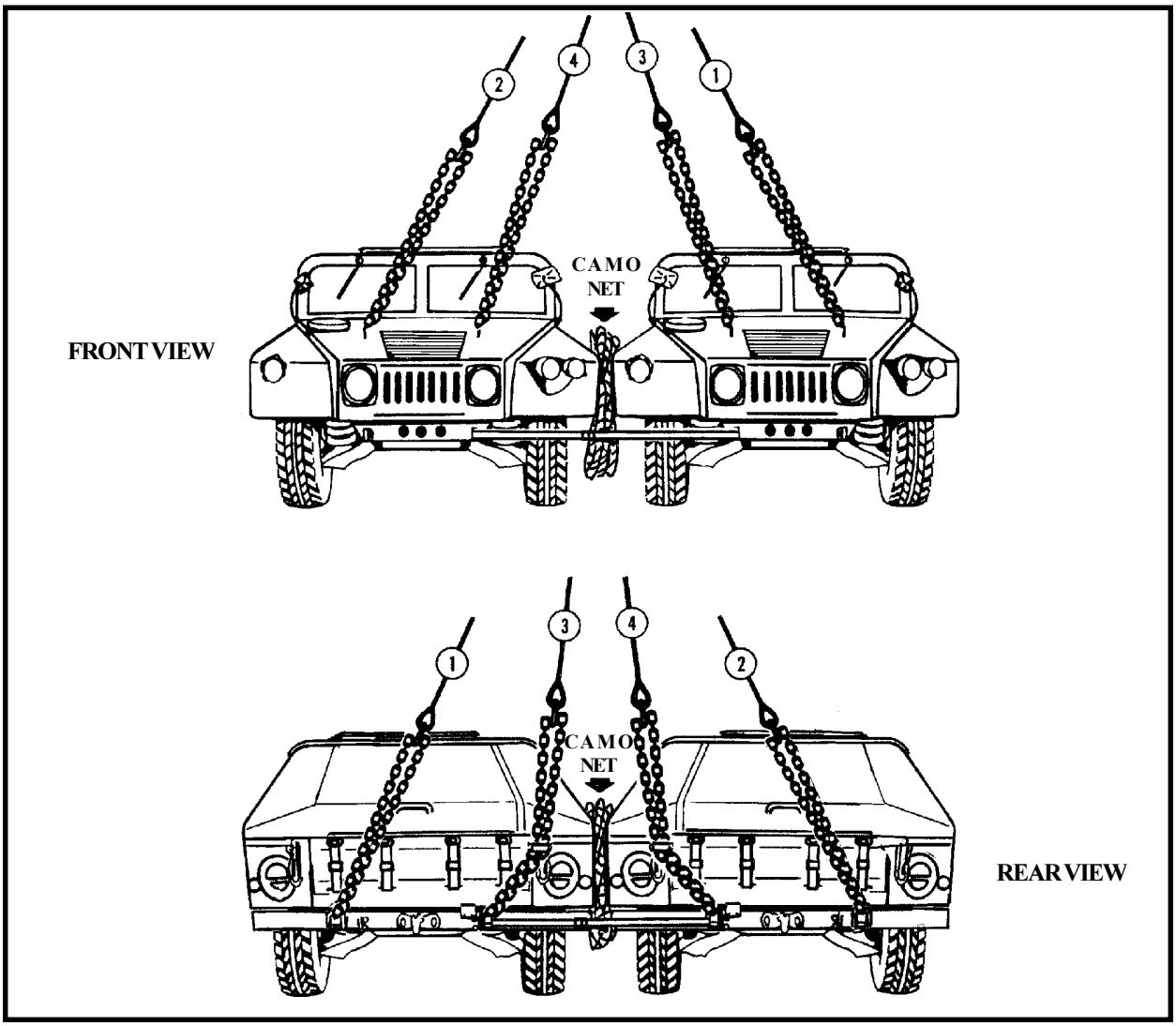

Figure 2-18. Dual HMMWVs, Side by Side (Shotgun Method)

RIGGING STEPS

1. Position one sling set on the hood of one of the vehicles.

2. Loop the chain end of the outside sling legs through their respective outside lift provisions that protrude through the hoods of the vehicles. Place link 30 in the grab hooks.

3. Loop the chain end of the inside sling legs through their respective inside lift provisions that protrude through the hoods of the vehicles. Place link 50 in the grab hooks.

4. Position the other sling set in the bed or on the roof of one of the vehicles.

5. Loop the chain end of the outside sling legs through their respective lift shackle on the outside end of the rear bumper. Place link 3 in the grab hooks.

CAUTION
DO NOT ROUTE THE OUTSIDE SLING LEGS THROUGH THE TAILGATE SLING GUIDES.

6. Route the chain ends of the inside sling legs through their respective inside tailgate guides. Loop the chain ends through their respective lift provisions located on the inside of the rear bumpers and back through the tailgate guides. Place link 7 in the grab hooks.

7. Secure all excess chain with tape or Type III nylon cord.

8. Cluster and tie or tape (breakaway technique) the sling legs in each sling set on top of the vehicle to prevent entanglement during hookup and lift-off.

9. Route a CGU-1/B cargo tiedown strap from the front inside lift shackle of one vehicle, through the front inside lift shackle of the other vehicle and connect the hooks together. Tighten the strap.

10. Route a CGU-1/B cargo tiedown strap from the rear inside lift shackle of one vehicle, through the rear inside lift shackle of the other vehicle and connect the hooks together. Ensure the strap is positioned below the sling leg chains. Tighten the strap.

Figure 2-18. Dual HMMWVs, Side by Side (Shotgun Method) (continued)

2-21. Medium Tactical Vehicles M1083/M1083A1/M1084/M1085/M1086/M1090/M1090A1/ M1093/M1094

a. Applicability. The following items in Table 2-20 are certified for the helicopter(s) listed in the following table by the US Army Soldier Systems Center:

Table 2-20. Medium Tactical Vehicles

NOMENCLATURE	MAX WEIGHT (POUNDS)	SLING SET	LINK COUNT FRONT/ REAR	TYPE OF AIRCRAFT	RECOMMENDED AIRSPEED (KNOTS)
Medium Tactical Vehicle, Cargo, M1083	23,200	25K	30/20	CH-47	110
Medium Tactical Vehicle, Cargo, M1083A1	23,200	25K	30/20	CH-47	110
Medium Tactical Vehicle, Cargo, M1083	28,000	40K	24/16	CH-53	110
Medium Tactical Vehicle, Cargo, M1083A1	28,000	40K	24/16	CH-53	110
Medium Tactical Vehicle, Cargo, with Material Handling Equipment, M1084	28,000	40K	19/16	CH-53	110
Medium Tactical Vehicle, Cargo, Longbed, M1085	28,000	40K	24/16	CH-53	110
Medium Tactical Vehicle, Cargo, Longbed, with Material Handling Equipment, M1086	28,000	40K	17/16	CH-53	110
Medium Tactical Vehicle, Dump Truck, M1090	22,100	25K	30/3	CH-47	110
Medium Tactical Vehicle, Dump Truck, M1090A1	23,200	25K	30/3	CH-47	110
Medium Tactical Vehicle, Dump Truck, M1090	22,100	40K	3/10	CH-53	110
Medium Tactical Vehicle, Dump Truck, M1090A1	24,817	40K	3/10	CH-53	110
Medium Tactical Vehicle, Cargo, Airdrop Variant, M1093	23,200	25K	30/20	CH-47	110
Medium Tactical Vehicle, Dump Truck, Airdrop Variant, M1094	22,770	25K	30/3	CH-47	110

WARNING
EXCEEDING THE RECOMMENDED AIRSPEED LISTED IN TABLE 2-20 MAY RESULT IN DAMAGE TO THE WINDSHIELDS OF THE VEHICLES.

b. Materials. The following materials are required to rig this load:

(1) Sling set (25,000-pound capacity) with one additional apex fitting.

(a) Chain length, part number 38850-00053-102, from a 25,000-pound capacity sling set (2 each).

(b) Coupling link, part number 664241, from a 25,000-pound sling set (2 each).

OR

(2) Sling set (40,000-pound capacity) with one additional apex fitting.

(a) Chain length, part number 607050, from a 40,000-pound capacity sling set (2 each).

(b) Coupling link, part number 577-0815, from a 40,000-pound sling set (2 each).

(3) Tape, adhesive, pressure-sensitive, 2-inch wide roll.

(4) Cord, nylon, Type III, 550-pound breaking strength.

(5) Webbing, cotton, 1/4-inch, 80-pound breaking strength.

c. Personnel. Two persons can prepare and rig this load in 15 minutes.

d. Procedures. The following procedures apply to this load:

(1) Preparation. Prepare the load using the following steps:

(a) Fold the cab sides up and fasten the roof to the cab if the cab is in the stowed/airdrop position.

(b) Extend the front lift provisions and the rear load spreaders and lock in place using the attached pin and safety pin.

(c) Roll up the windows in the cab.

(d) Tape all windows, lights, and reflectors.

(e) Remove the air intake cowling by loosening the the clamp and twisting off. Place the cowling on the floor board of the passenger's side.

(f) Ensure the front wheels are pointed straight ahead. Tie down the steering wheel using the driver's side seat belt.

(g) Fold the side view mirrors back and secure with tape or Type III nylon cord.

(h) Safety the cargo bed walls securing clips in the secured position with tape (only if the cargo bed walls are not stowed in the racks under the bed).

(i) Stow and secure the cab protector (dump trucks only).

(j) Stow the mud flaps by bending and hooking on the mud flap hooks.

(k) Engage the vehicle parking brake and put the transmission in neutral.

(l) Ensure the fuel tank is not over 3/4 full. Inspect fuel tank cap, oil filler cap, and battery caps for proper installation.

(m) Tape the filler pipes behind the cab on the driver's side to prevent the sling legs from becoming entangled.

(n) Secure any cargo in the bed of the vehicle.

(2) Rigging. Rig the load according to the steps in Figure 2-19.

(3) Hookup. The hookup team stands in the bed of the vehicle. The static wand person discharges the static electricity with the static wand. The forward hookup person places apex fitting 1 onto the forward cargo hook. The aft hookup person places apex fitting 2 onto the aft cargo hook. The hookup team then carefully dismounts the vehicle and remains close to the load as the helicopter removes slack from the sling legs. When successful hookup is assured, the hookup team quickly exits the area underneath the helicopter to the designated rendezvous point.

(4) Derigging. Derigging is the reverse of the preparation and rigging procedures in steps d (1) and d (2).

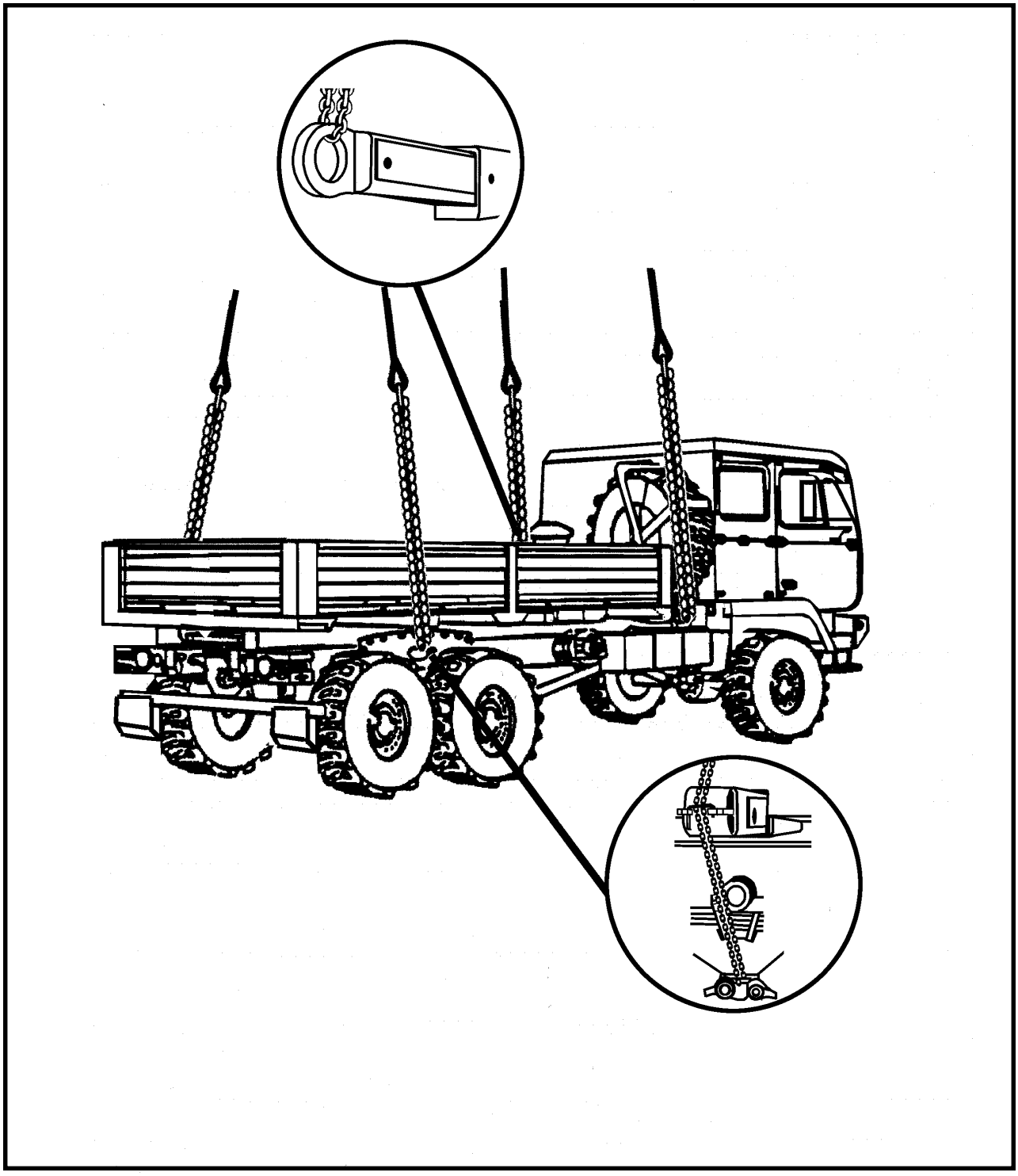

Figure 2-19. Medium Tactical Vehicles

RIGGING STEPS	
1. Connect 2 sling legs to apex fitting number 1. Position the apex fitting on the forward end of the bed.	sling leg using one coupling link. Position the apex fitting on the rear of the cargo bed.
2. Loop the chain end of the sling legs through their respective lift provisions located behind the vehicle cab. Place the correct link from Table 2-20 in the grab hook and secure all excess chain with tape or Type III nylon cord.	**5.** Route the left and right chains through their respective rear load spreader and loop the chain end of the sling legs through their respective lift ring, located on the chassis between the tires. Route the chains back through the rear load spreaders and place the correct link from Table 2-20 in the grab hook. Secure all excess chain with tape or Type III nylon cord.
3. Cluster and tie or tape (breakaway technique) the sling legs on top of the spare tire to prevent entanglement during hookup and lift-off.	**6.** Cluster and tie or tape (breakaway technique) the sling legs together to prevent entanglement during hookup and lift-off.
4. Connect 2 sling legs to apex fitting number 2. Attach one extra chain length to each existing chain on each	

Figure 2-19. Medium Tactical Vehicles (continued)

2-21.1 Light Medium Tactical Vehicles M1078/M1078A1/M1079A1/M1081

a. Applicability. The following items in Table 2-20.1 are certified for the helicopter(s) listed in the following table by the US Army Soldier Systems Center:

Table 2-20.1. Light Medium Tactical Vehicles

NOMENCLATURE	MAX WEIGHT (POUNDS)	SLING SET	LINK COUNT FRONT/ REAR	TYPE OF AIRCRAFT	RECOMMENDED AIRSPEED (KNOTS)
Light Medium Tactical Vehicle, Cargo, M1078	23,200	25K	30/20	CH-47	110
Light Medium Tactical Vehicle, Cargo, M1078A1	23,200	25K	30/20	CH-47	110
Light Medium Tactical Vehicle, Shopvan, M1079A1	23,200	25K	30/20	CH-47	110
Light Medium Tactical Vehicle, Cargo, M1081	23,000	25K	30/20	CH-47	110

WARNING
EXCEEDING THE RECOMMENDED AIRSPEED LISTED IN TABLE 2-20.1 MAY RESULT IN DAMAGE TO THE WINDSHIELDS OF THE VEHICLES.

b. Materials. The following materials are required to rig this load:

(1) Sling set (25,000-pound capacity) with one additional apex fitting.

(a) Chain length, part number 38850-00053-102, from a 25,000-pound capacity sling set (6 each).

(b) Coupling link, part number 664241, from a 25,000-pound sling set (6 each).

(2) Tape, adhesive, pressure-sensitive, 2-inch wide roll.

(3) Cord, nylon, Type III, 550-pound breaking strength.

(4) Webbing, cotton, 1/4-inch, 80-pound breaking strength.

c. Personnel. Two persons can prepare and rig this load in 15 minutes.

d. Procedures. The following procedures apply to this load:

(1) Preparation. Prepare the load using the following steps:

(a) Fold the cab sides up and fasten the roof to the cab if the cab is in the stowed/airdrop position (airdrop variant only).

(b) Extend the front lift provisions and the rear load spreaders and lock in place using the attached pin and safety pin.

(c) Roll up the windows in the cab.

(d) Tape all windows, lights, and reflectors.

(e) Remove the air intake cowling by loosening the the clamp and twisting off. Place the cowling on the floor board of the passenger's side.

(f) Ensure the front wheels are pointed straight ahead. Tie down the steering wheel using the driver's side seat belt.

(g) Fold the side view mirrors back and secure with tape or Type III nylon cord.

(h) Safety the cargo bed walls securing clips in the secured position with tape (only if the cargo bed walls are not stowed in the racks under the bed).

(i) Stow the mud flaps by bending and hooking on the mud flap hooks.

(j) Engage the vehicle parking brake and put the transmission in neutral.

(k) Ensure the fuel tank is not over 3/4 full. Inspect fuel tank cap, oil filler cap, and battery caps for proper installation.

(l) Tape the filler pipes behind the cab on the driver's side to prevent the sling legs from becoming entangled.

(m) Secure any cargo in the bed of the vehicle.

(2) Rigging. Rig the load according to the steps in Figure 2-19.1.

(3) Hookup. The hookup team stands in the bed of the vehicle. The static wand person discharges the static electricity with the static wand. The forward hookup person places apex fitting 1 onto the forward cargo hook. The aft hookup person places apex fitting 2 onto the aft cargo hook. The hookup team then carefully dismounts the vehicle and remains close to the load as the helicopter removes slack from the sling legs. When successful hookup is assured, the hookup team quickly exits the area underneath the helicopter to the designated rendezvous point.

(4) Derigging. Derigging is the reverse of the preparation and rigging procedures in steps d (1) and d (2).

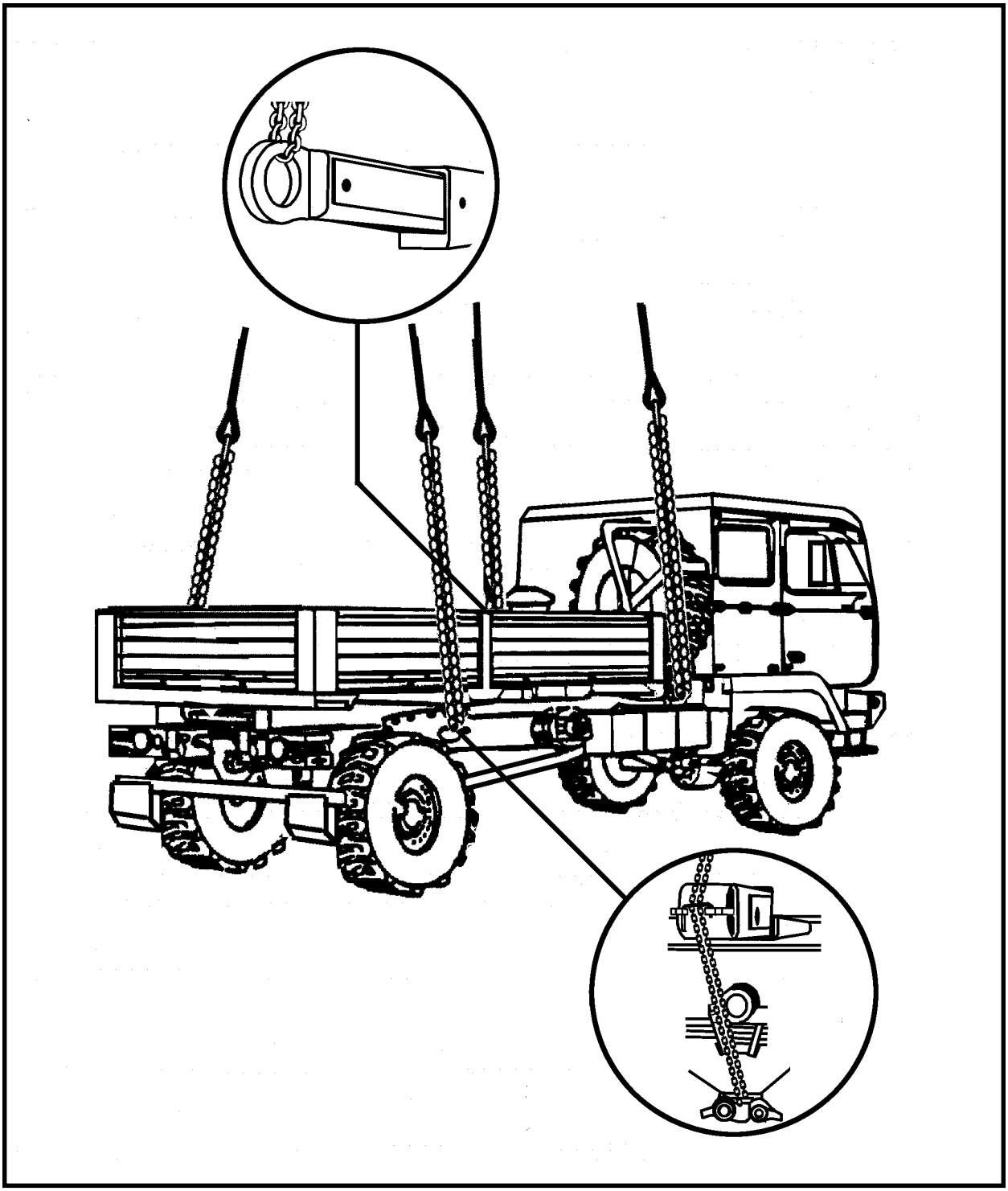

Figure 2-19.1. Light Medium Tactical Vehicles

RIGGING STEPS

1. Connect 2 sling legs to apex fitting number 1. Attach one extra chain length to each existing chain on each sling leg using one coupling link. Position the apex fitting on the forward end of the bed.

2. Loop the chain end of the sling legs through their respective lift provisions located behind the vehicle cab. Place the correct link from Table 2-20.1 in the grab hook and secure all excess chain with tape or Type III nylon cord.

3. Cluster and tie or tape (breakaway technique) the sling legs on top of the spare tire to prevent entanglement during hookup and lift-off.

4. Connect 2 sling legs to apex fitting number 2. Attach two extra chain lengths to each existing chain on each sling leg using one coupling link for each additional chain length added. Position the apex fitting on the rear of the cargo bed.

5. Route the left and right chains through their respective rear load spreader and loop the chain end of the sling legs through their respective lift ring, located on the chassis near the rear axle. Route the chains back through the rear load spreaders and place the correct link from Table 2-20.1 in the grab hook. Secure all excess chain with tape or Type III nylon cord.

6. Cluster and tie or tape (breakaway technique) the sling legs together to prevent entanglement during hookup and lift-off.

Figure 2-19.1. Light Medium Tactical Vehicles (continued)

2-21.2 Light Medium Tactical Vehicles (LMTV) M1078/M1078A1/M1081 With Type III Cargo Bed Cover and Medium Tactical Vehicles (MTV) M1083/M1083A1/M1093 With Type IV Cargo Bed Cover

a. Applicability. The following items in Table 2-20.2 are certified for the helicopter(s) listed in the following table by the US Army Soldier Systems Center:

Table 2-20.2. LMTVs and MTVs With Cargo Bed Covers

NOMENCLATURE	MAX WEIGHT (POUNDS)	SLING SET	LINK COUNT FRONT/ REAR	TYPE OF AIRCRAFT	RECOMMENDED AIRSPEED (KNOTS)
Type III Cargo Bed Cover (deployed or stowed) on Light Medium Tactical Vehicle, Cargo, M1078	23,200	25K	25/3	CH-47	110
Type III Cargo Bed Cover (deployed or stowed) on Light Medium Tactical Vehicle, Cargo, M1078A1	23,200	25K	25/3	CH-47	110
Type III Cargo Bed Cover (deployed or stowed) on Light Medium Tactical Vehicle, Cargo, Airdrop Variant, M1081	23,200	25K	25/3	CH-47	110
Type IV Cargo Bed Cover (deployed or stowed) on Medium Tactical Vehicle, Cargo, M1083	23,200	25K	20/3	CH-47	110
Type IV Cargo Bed Cover (deployed or stowed) on Medium Tactical Vehicle, Cargo, M1083A1	23,200	25K	20/3	CH-47	110
Type IV Cargo Bed Cover (deployed or stowed) on Medium Tactical Vehicle, Cargo, Airdrop Variant, M1093	23,200	25K	20/3	CH-47	110

WARNING
EXCEEDING THE RECOMMENDED AIRSPEED LISTED IN TABLE 2-20.2 MAY RESULT IN DAMAGE TO THE WINDSHIELDS OF THE VEHICLES.

NOTE: Certified Cargo Bed Cover NSNs are:

Type III Camouflage: 5411-01-472-7852
Type III Sand: 5411-01-479-1932
Type IV Camouflage: 5411-01-472-7857
Type IV Sand: 5411-01-479-1933

b. Materials. The following materials are required to rig this load:

(1) Sling set (25,000-pound capacity) with one additional apex fitting.

(a) Chain length, part number 38850-00053-102, from a 25,000-pound capacity sling set (6 each).

(b) Coupling link, part number 664241, from a 25,000-pound sling set (6 each).

(2) Tape, adhesive, pressure-sensitive, 2-inch wide roll.

(3) Cord, nylon, Type III, 550-pound breaking strength.

(4) Webbing, cotton, 1/4-inch, 80-pound breaking strength.

c. Personnel. Two persons can prepare and rig this load in 15 minutes.

d. Procedures. The following procedures apply to this load:

(1) Preparation. Prepare the load using the following steps:

(a) Fold the cab sides up and fasten the roof to the cab if the cab is in the stowed/airdrop position (airdrop variant only).

(b) Extend the front lift provisions and the rear load spreaders and lock in place using the attached pin and safety pin.

(c) Roll up the windows in the cab.

(d) Tape all windows, lights, and reflectors.

(e) Remove the air intake cowling by loosening the the clamp and twisting off. Place the cowling on the floor board of the passenger's side.

(f) Ensure the front wheels are pointed straight ahead. Tie down the steering wheel using the driver's side seat belt.

(g) Fold the side view mirrors back and secure with tape or Type III nylon cord.

(h) Safety the cargo bed walls securing clips in the secured position with tape (only if the cargo bed walls are not stowed in the racks under the bed).

(i) Stow the mud flaps by bending and hooking on the mud flap hooks.

(j) Engage the vehicle parking brake and put the transmission in neutral.

(k) Ensure the fuel tank is not over 3/4 full. Inspect fuel tank cap, oil filler cap, and battery caps for proper installation.

(l) Tape the filler pipes behind the cab on the driver's side to prevent the sling legs from becoming entangled.

(m) Secure any cargo that is stowed in the cargo bed cover with lashings, Type III nylon cord, or tape.

(2) Rigging. Rig the load according to the steps in Figure 2-19.2.

NOTE: Figure 2-19.2 shows an MTV. The LMTVs only have one rear axle.

(3) Hookup. The hookup team stands on the cargo bed cover. The static wand person discharges the static electricity with the static wand. The forward hookup person places apex fitting 1 onto the forward cargo hook. The aft hookup person places apex fitting 2 onto the aft cargo hook. The hookup team then carefully dismounts the vehicle and remains close to the load as the helicopter removes slack from the sling legs. When successful hookup is assured, the hookup team quickly exits the area underneath the helicopter to the designated rendezvous point.

(4) Derigging. Derigging is the reverse of the preparation and rigging procedures in steps d (1) and d (2).

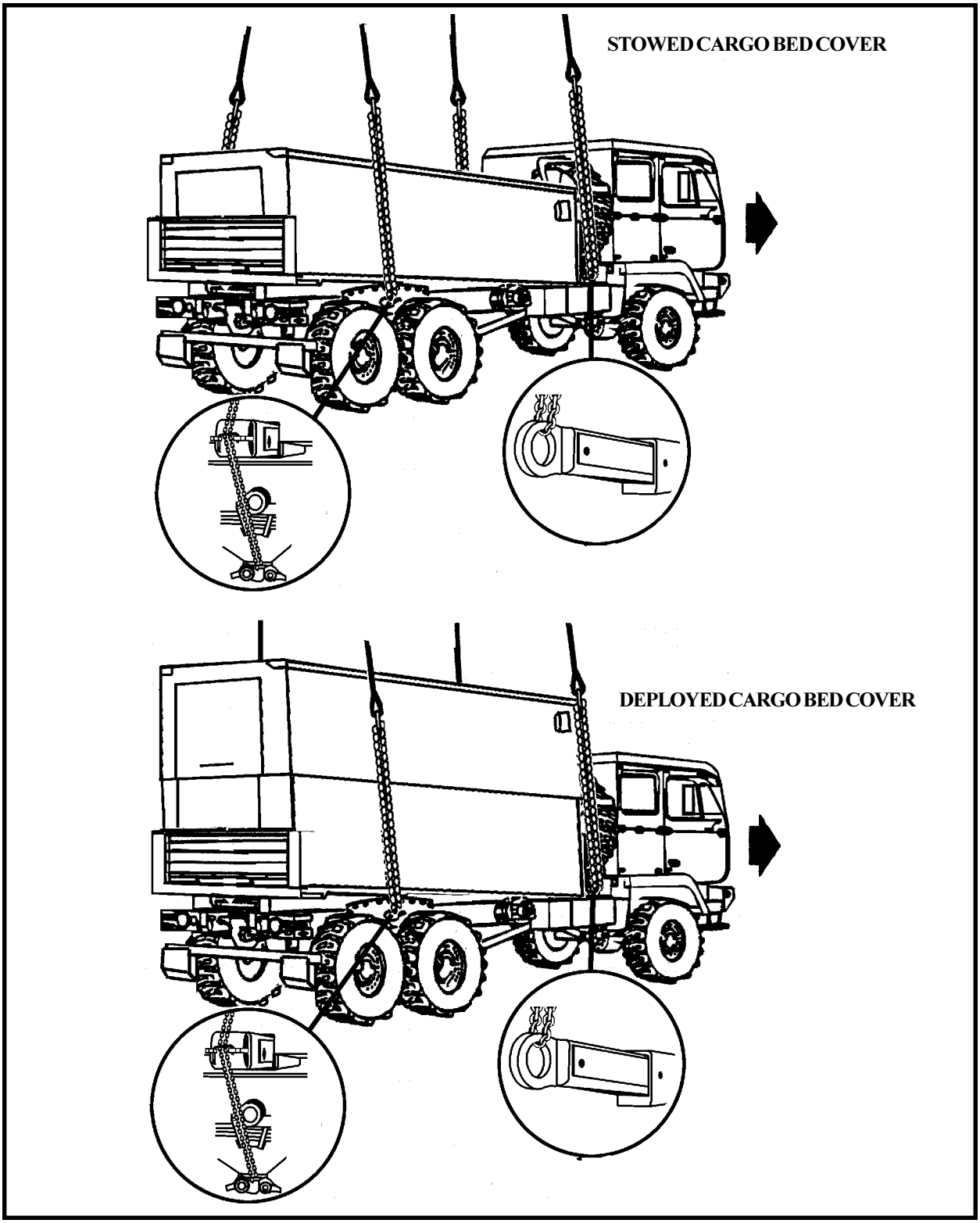

Figure 2-19.2. LMTVs and MTVs With Cargo Bed Covers

RIGGING STEPS

1. Connect 2 sling legs to apex fitting number 1. Attach one extra chain length to each existing chain on each sling leg using one coupling link. Position the apex fitting on the forward end of the cargo bed cover.

2. Loop the chain end of the sling legs through their respective lift provisions located behind the vehicle cab. Place the correct link from Table 2-20.2 in the grab hook and secure all excess chain with tape or Type III nylon cord.

3. Cluster and tie or tape (breakaway technique) the sling legs on top of the spare tire to prevent entanglement during hookup and lift-off.

4. Connect 2 sling legs to apex fitting number 2. Attach two extra chain lengths to each existing chain on each sling leg using one coupling link for each additional chain length added. Position the apex fitting on the rear of the cargo cargo bed cover.

5. Route the left and right chains through their respective rear load spreader and loop the chain end of the sling legs through their respective lift ring, located on the chassis near the rear axle. Route the chains back through the rear load spreaders and place the correct link from Table 2-20.2 in the grab hook. Secure all excess chain with tape or Type III nylon cord. Close the safety gate on each of the rear load spreaders.

6. Cluster and tie or tape (breakaway technique) the sling legs together to prevent entanglement during hookup and lift-off.

Figure 2-19.2. LMTVs and MTVs With Cargo Bed Covers (continued)

2-22. Medium Tactical Vehicle, Tractor, M1088/M1088A1

a. Applicability. The following items in Table 2-21 are certified for the helicopter(s) listed in the following table by the US Army Soldier Systems Center:

Table 2-21. Medium Tactical Vehicles, Tractor, M1088/M1088A1

NOMENCLATURE	MAX WEIGHT (POUNDS)	SLING SET	LINK COUNT FRONT/ REAR	TYPE OF AIRCRAFT	RECOMMENDED AIRSPEED (KNOTS)
Medium Tactical Vehicle, Tractor, M1088	19,740	25K	40/3	CH-47	110
Medium Tactical Vehicle, Tractor, M1088A1	19,740	25K	40/3	CH-47	110
Medium Tactical Vehicle, Tractor, M1088	19,740	40K	3/20	CH-53	110
Medium Tactical Vehicle, Tractor, M1088A1	19,740	40K	3/20	CH-53	110

WARNING
EXCEEDING THE RECOMMENDED AIRSPEED LISTED IN TABLE 2-21 MAY RESULT IN DAMAGE TO THE WINDSHIELDS OF THE VEHICLES.

b. Materials. The following materials are required to rig this load:

(1) Sling set (25,000-pound capacity) with one additional apex fitting.

(a) Chain length, part number 38850-00053-102, from a 25,000-pound capacity sling set (2 each).

(b) Coupling link, part number 664241, from a 25,000-pound sling set (2 each).

OR

(2) Sling set (40,000-pound capacity) with one additional apex fitting.

(3) Tape, adhesive, pressure-sensitive, 2-inch wide roll.

(4) Cord, nylon, Type III, 550-pound breaking strength.

(5) Webbing, cotton, 1/4-inch, 80-pound breaking strength.

c. Personnel. Two persons can prepare and rig this load in 15 minutes.

d. Procedures. The following procedures apply to this load:

(1) Preparation. Prepare the load using the following steps:

(a) Extend the front lift provisions and lock in place using the attached pin and safety pin.

(b) Roll up the windows in the cab.

(c) Tape all windows, lights, and reflectors.

(d) Remove the air intake cowling by loosening the the clamp and twisting off. Place the cowling on the floor board of the passenger's side.

(e) Ensure the front wheels are pointed straight ahead. Tie down the steering wheel using the driver's side seat belt.

(f) Fold the side view mirrors back and secure with tape or Type III nylon cord
.

(g) Stow the mud flaps by bending and hooking on the mud flap hooks.

(h) Engage the vehicle parking brake and put the transmission in neutral.

(i) Ensure the fuel tank is not over 3/4 full. Inspect fuel tank cap, oil filler cap, and battery caps for proper installation.

(j) Tape the filler pipes behind the cab on the driver's side to prevent the sling legs from becoming entangled.

(2) Rigging. Rig the load according to the steps in Figure 2-20.

(3) Hookup. The hookup team stands on the rear of the vehicle. The static wand person discharges the static electricity with the static wand. The forward hookup person places apex fitting 1 onto the forward cargo hook. The aft hookup person places apex fitting 2 onto the aft cargo hook. The hookup team then carefully dismounts the vehicle and remains close to the load as the helicopter removes slack from the sling legs. When successful hookup is assured, the hookup team quickly exits the area underneath the helicopter to the designated rendezvous point.

(4) Derigging. Derigging is the reverse of the preparation and rigging procedures in steps d (1) and d (2).

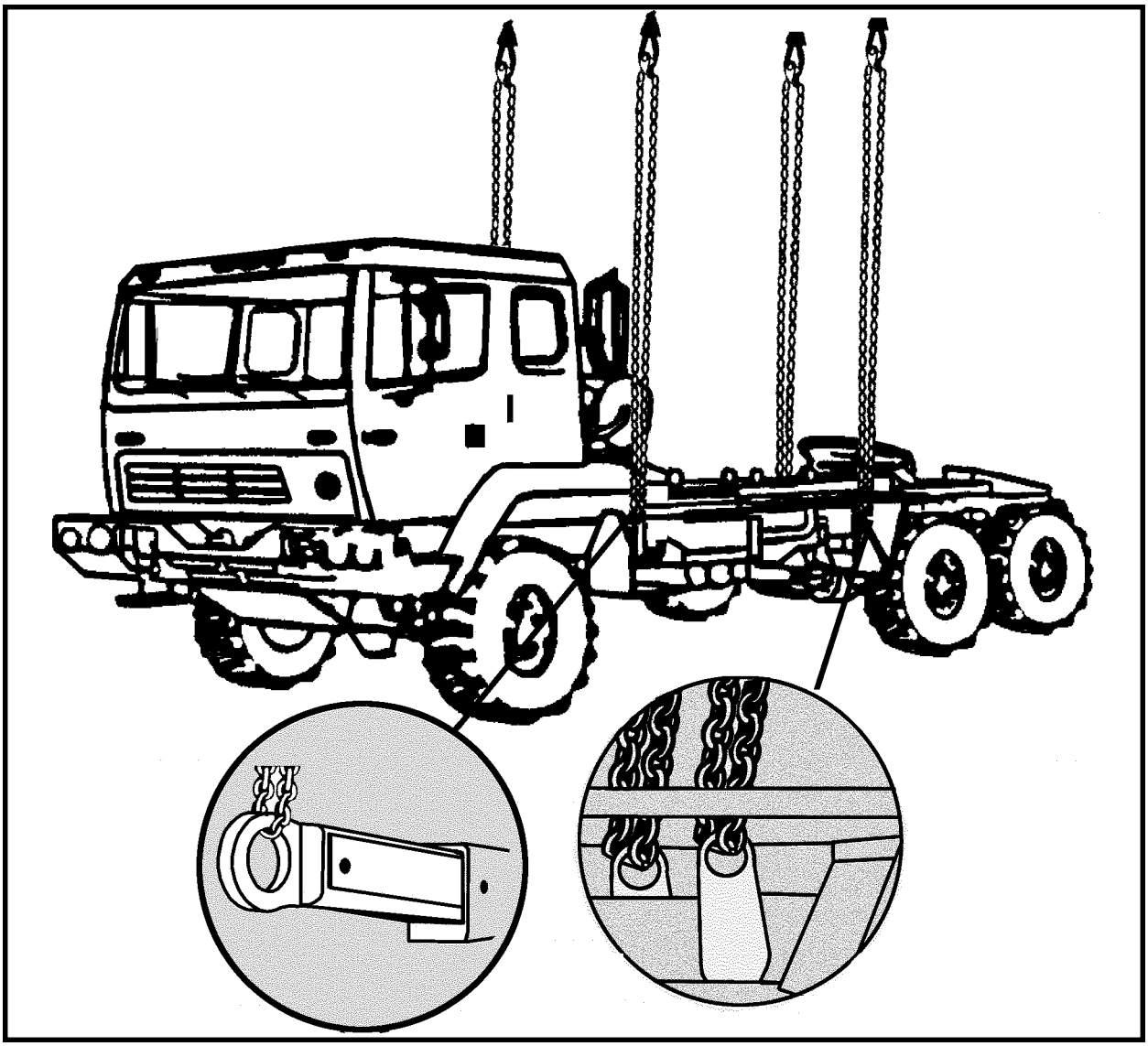

Figure 2-20. Medium Tactical Vehicles, Tractor,M1088/M1088A1

RIGGING STEPS

1. Connect 2 sling legs to apex fitting number 1. Attach one extra chain length to each existing chain on each sling leg using one coupling link (for 25,000-pound capacity sling sets only). Position the apex fitting on the forward end of the bed.

2. Loop the chain end of the sling legs through their respective lift provisions located behind the vehicle cab. Place the correct link from Table 2-21 in the grab hook and secure all excess chain with tape or Type III nylon cord.

3. Cluster and tie or tape (breakaway technique) the sling legs on top of the spare tire to prevent entanglement during hookup and lift-off.

4. Connect 2 sling legs to apex fitting number 2. Position the apex fitting on the rear of the cargo deck.

5. Loop the chain end of the sling legs through their respective lift ring, located forward of the 5th wheel. Place the correct link from Table 2-21 in the grab hook. Secure all excess chain with tape or Type III nylon cord.

6. Cluster and tie or tape (breakaway technique) the sling legs together to prevent entanglement during hookup and lift-off.

Figure 2-20. Medium Tactical Vehicles, Tractor M1088/M1088A1 (continued)

2-23. Light Armored Vehicle (LAV) (USMC)

a. Applicability. The following items in Table 2-22 are certified for the helicopter(s) listed in the following table by the US Army Soldier Systems Center:

Table 2-22. Light Armored Vehicle (LAV)

NOMENCLATURE	MAX WEIGHT (POUNDS)	SLING SET	LINK COUNT FRONT/ REAR	TYPE OF AIRCRAFT	RECOMMENDED AIRSPEED (KNOTS)
Command and Control TAMCN E0946	27,060	40K	3/45	CH-53	135
25-MM, TAMCN E0947	28,200	40K	3/20	CH-53	130
Logistics, TAMCN E0948	28,200	40K	3/45	CH-53	135
Mortar, TAMCN E0949	27,400	40K	3/20	CH-53	130
Recovery Unit, TAMCN E0950	23,400	40K	3/50	CH-53	135
Tow Anti-Tank, TAMCN E0942	27,650	40K	3/30	CH-53	130

b. Materials. The following materials are required to rig this load:

(1) Sling set (40,000-pound capacity) with one additional apex fitting.

(2) Tape, adhesive, pressure-sensitive, 2-inch wide roll.

(3) Cord, nylon, Type III, 550-pound breaking strength.

(4) Webbing, cotton, 1/4-inch, 80-pound breaking strength.

(5) Felt sheet, cattle hair, Type IV, 1/2-inch or suitable padding.

c. Personnel. Two persons can prepare and rig this load in 15 minutes.

d. Procedures. The following procedures apply to this load:

(1) Preparation. Prepare the load using the following steps:

(a) Secure all loose items inside the LAV.

(b) Remove all antennae.

(c) Ensure the parking brake is set.

(d) Pad and tape all vision blocks, mirrors, and lights.

(e) Secure all hatches and panels.

(f) Ensure the boom is pinned down and tape the hydraulic cables. (Recovery Unit)

(2) Rigging. Rig the load according to the steps in Figure 2-21.

(3) Hookup. The hookup team stands on top of the vehicle. The static wand person discharges the static electricity with the static wand. The forward hookup person places apex fitting 1 onto the forward cargo hook. The aft hookup person places apex fitting 2 onto the aft cargo hook. The hookup team then carefully dismounts the vehicle and remains close to the load as the helicopter removes slack from the sling legs. When successful hookup is assured, the hookup team quickly exits the area underneath the helicopter to the designated rendezvous point.

(4) Derigging. Derigging is the reverse of the preparation and rigging procedures in steps d (1) and d (2).

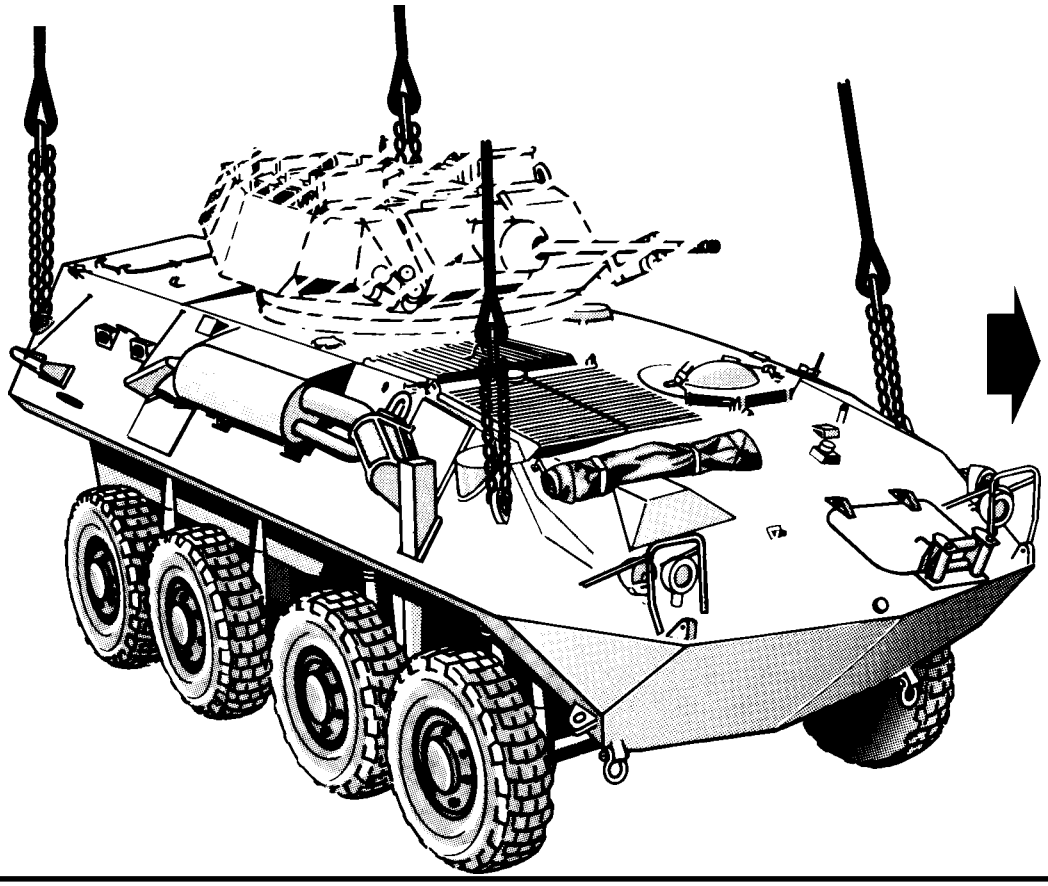

1. Connect 2 sling legs to apex fitting number 1. Position the apex fitting on top of the LAV.

2. Loop the chain end of the sling legs through their respective lift provisions. Place the correct link from Table 2-22 in the grab hook.

3. Connect 2 sling legs to apex fitting number 2. Position the apex fitting on top of the LAV.

4. Loop the chain end of the sling legs through their respective lift provision. Place the correct link from Table 2-22 in the grab hook.

5. Secure all excess chain with tape or Type III nylon cord.

6. Cluster and tie or tape (breakaway technique) the sling legs in each sling set on top of the LAV to prevent entanglement during hookup and lift-off.

Figure 2-21. Light Armored Vehicle (LAV)

2-24. Truck, Cargo, 5-ton, M813A1/M923/M925

a. Applicability. The following items in Table 2-23 are certified for the helicopter(s) listed in the following table by the US Army Soldier Systems Center:

Table 2-23. Truck, Cargo, 5-ton, M813A1/M923/M925

NOMENCLATURE	MAX WEIGHT (POUNDS)	SLING SET	LINK COUNT FRONT/ REAR	TYPE OF AIRCRAFT	RECOMMENDED AIRSPEED (KNOTS)
Truck, Cargo, 5-ton, w/wo winch, M813A1	21,120	40K	3/55	CH-53	110
Truck, Cargo, 5-ton, wo winch, M923	22,175	40K	3/55	CH-53	110
Truck, Cargo, 5-ton, with winch, M925	23,275	40K	3/55	CH-53	110

b. Materials. The following materials are required to rig this load:

(1) Sling set (40,000-pound capacity) with one additional apex fitting.

(2) Tape, adhesive, pressure-sensitive, 2-inch wide roll.

(3) Cord, nylon, Type III, 550-pound breaking strength.

(4) Webbing, cotton, 1/4-inch, 80-pound breaking strength.

c. Personnel. Two persons can prepare and rig this load in 15 minutes.

d. Procedures. The following procedures apply to this load:

(1) Preparation. Prepare the load using the following steps:

(a) Remove cab top and rear canvas. Fold and secure to the truck.

(b) Roll down the front cab windows.

(c) Remove side racks/seats and secure to the truck.

(d) Secure all loose equipment inside the truck with tape, lashings, or Type III nylon cord.

(e) Ensure the fuel tank is not over 3/4 full. Inspect fuel tank cap, oil filler cap, and battery caps for proper installation.

(f) Engage the parking brake and place the transmission in neutral.

(g) Ensure the front wheels are pointed straight ahead. Tie down the steering wheel using Type III nylon cord.

(h) Extend the front lift provisions located aft of the front tires. Insert the bolts in the holes, fasten nuts, and install locking pins

(2) Rigging. Rig the load according to the steps in Figure 2-22.

(3) Hookup. The hookup team stands in the bed of the truck. The static wand person discharges the static electricity with the static wand. The forward hookup person places apex fitting 1 onto the forward cargo hook. The aft hookup person places apex fitting 2 onto the aft cargo hook. The hookup team then carefully dismounts the ve

hicle and remains close to the load as the helicopter removes slack from the sling legs. When successful hookup is assured, the hookup team quickly exits the area underneath the helicopter to the designated rendezvous point.

(4) Derigging. Derigging is the reverse of the preparation and rigging procedures in steps d (1) and d (2).

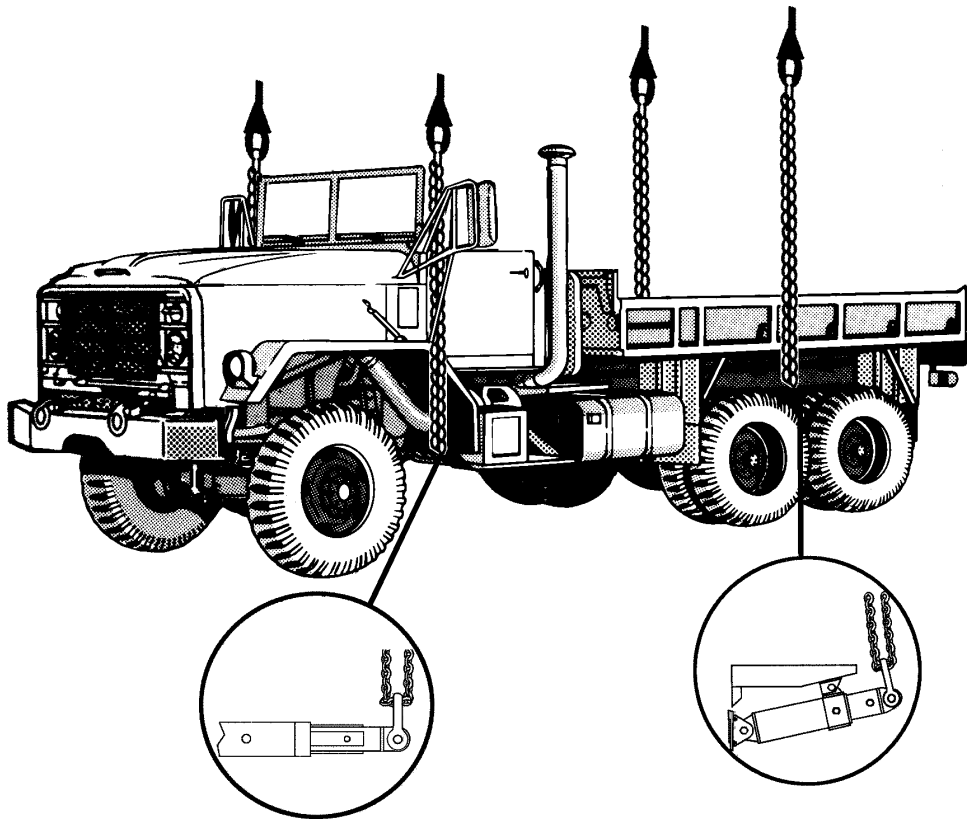

RIGGING STEPS

1. Connect 2 sling legs to apex fitting number 1. Position the apex fitting in the bed of the vehicle.

2. Loop the chain end of the sling legs through their respective lift provisions aft of the front wheels. Route the sling legs to the rear of the mirrors. Place the correct link from Table 2-23 in the grab hook.

3. Connect 2 sling legs to apex fitting number 2. Position the apex fitting in the bed of the vehicle.

4. Loop the chain end of the sling legs through their respective lift provisions located between the rear wheels. Place the correct link from Table 2-23 in the grab hook.

5. Secure all excess chain with tape or Type III nylon cord.

6. Cluster and tie or tape (breakaway technique) the sling legs in each sling set on top of the vehicle to prevent entanglement during hookup and lift-off.

Figure 2-22. Truck, Cargo, 5-ton, M813A1/M923/M925

2-25. Truck, Cargo, 2 1/2-ton, M35A2 Modified, Part of an AN/MPQ-49A Forward Area Alerting Radar (FAAR) System

a. Applicability. The following item in Table 2-24 is certified for the helicopter(s) listed in the following table by the US Army Soldier Systems Center:

Table 2-24. Truck, Cargo, 2 1/2-ton, M35A2 Modified

NOMENCLATURE	MAX WEIGHT (POUNDS)	SLING SET	LINK COUNT FRONT/ REAR	TYPE OF AIRCRAFT	RECOMMENDED AIRSPEED (KNOTS)
Truck, 2 1/2-ton, modified, M35A2	10,900	25K	3/3	CH-47	130

b. Materials. The following materials are required to rig this load:

(1) Sling set (25,000-pound capacity) with one additional apex fitting.

(2) Tape, adhesive, pressure-sensitive, 2-inch wide roll.

(3) Cord, nylon, Type III, 550-pound breaking strength.

(4) Webbing, cotton, 1/4-inch, 80-pound breaking strength.

(5) Tie-down strap, cargo, CGU-1/B (as required).

c. Personnel. Two persons can prepare and rig this load in 15 minutes.

d. Procedures. The following procedures apply to this load:

(1) Preparation. Prepare the load using the following steps:

(a) Remove the upper portion of the exhaust stack and secure it in the cab.

(b) Remove the cab's canvas top, lower the windshield, fold the canvas top over the windshield and secure with Type III nylon cord.

(c) Secure the windshield in the down position with CGU-1/B.

(d) Safety the hood closed with Type III nylon cord around the hood latch brackets and grill.

(e) Ensure the fuel tank is not over 3/4 full. Inspect fuel tank cap, oil filler cap, and battery caps for proper installation. Ensure the battery compartment door is fastened closed.

(f) Tie down the seats and secure the doors with Type III nylon cord.

(g) Engage the parking brake and place the transmission in neutral.

(h) Ensure the front wheels are pointed straight ahead. Tie down the steering wheel using Type III nylon cord.

(2) Rigging. Rig the load according to the steps in Figure 2-23.

(3) Hookup. The static wand person discharges the static electricity with the static wand. The forward hookup person stands on the passenger's seat and places apex fitting 1 onto the forward cargo hook. The aft hookup person stands on the chassis and places apex fitting 2 onto the aft cargo hook. The hookup team then carefully dismounts the vehicle and remains close to the load as the helicopter removes slack from the sling legs. When successful hookup is assured, the hookup team quickly exits the area underneath the helicopter to the designated rendezvous point.

(4) Derigging. Derigging is the reverse of the preparation and rigging procedures in steps d (1) and d (2).

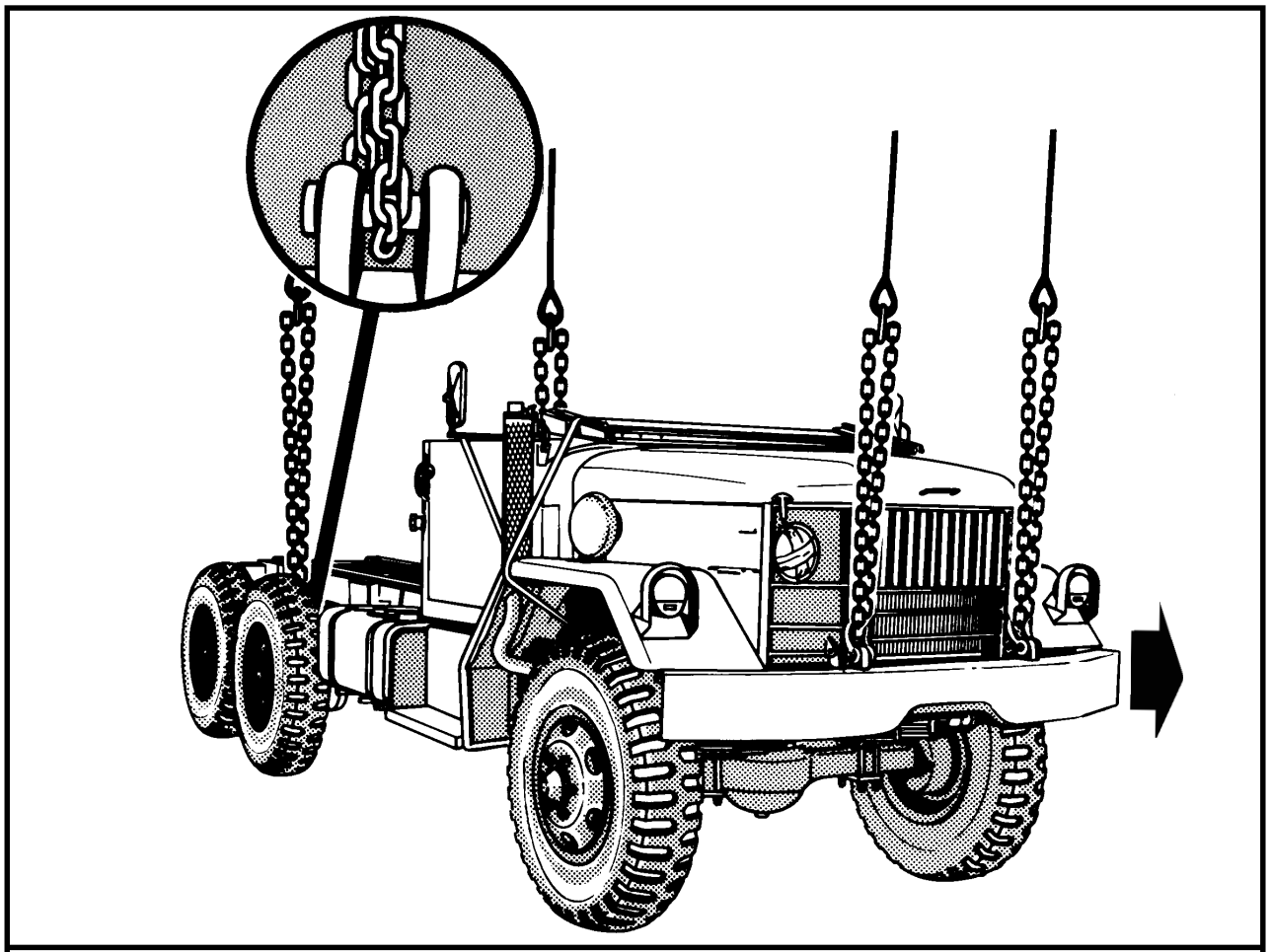

RIGGING STEPS

1. Connect 2 sling legs to apex fitting number 1. Position the apex fitting on the hood of the vehicle.

2. Loop the chain end of the sling legs through their respective lift provisions on the front bumper. Place the correct link from Table 2-24 in the grab hook.

3. Connect 2 sling legs to apex fitting number 2. Position the apex fitting on the chassis of the vehicle.

4. Loop the chain end of the sling legs through their respective lift provision located on top of the spring housing between the rear wheels. Place the correct link from Table 2-24 in the grab hook.

5. Secure all excess chain with tape or Type III nylon cord.

6. Cluster and tie or tape (breakaway technique) the sling legs in each sling set on top of the vehicle to prevent entanglement during hookup and lift-off.

Figure 2-23. Truck, Cargo, 2 1/2-ton, M35A2 Modified

2-26. Front Power Unit, MK48

a. Applicability. The following item in Table 2-25 is certified for the helicopter(s) listed in the following table by the US Army Soldier Systems Center:

Table 2-25. Front Power Unit, MK48

NOMENCLATURE	MAX WEIGHT (POUNDS)	SLING SET	LINK COUNT FRONT/ REAR	TYPE OF AIRCRAFT	RECOMMENDED AIRSPEED (KNOTS)
Front Power Unit, MK48	26,000	40K	Listed in Rigging Steps	CH-53	110

b. Materials. The following materials are required to rig this load:

(1) Sling set (40,000-pound capacity) with one additional apex fitting.

(2) Chain length, part number 607050, from a 40,000-pound capacity sling set (2 each).

(3) Coupling link, part number 577-0815, from a 40,000-pound capacity sling set (2 each).

(4) Tape, adhesive, pressure-sensitive, 2-inch wide roll.

(5) Cord, nylon, Type III, 550-pound breaking strength.

(6) Webbing, cotton, 1/4-inch, 80-pound breaking strength.

c. Personnel. Two persons can prepare and rig this load in 20 minutes.

d. Procedures. The following procedures apply to this load:

(1) Preparation. Prepare the load using the following steps:

(a) Ensure the front wheels are pointed straight ahead. Tie down the steering wheel using Type III nylon cord.

(b) Engage the parking brake and place the transmission in neutral.

(c) Ensure the fuel tank is not over 3/4 full. Inspect fuel tank cap, oil filler cap, and battery caps for proper installation. Ensure the battery compartment door is fastened closed.

(d) Open the vent on top of the cab. Secure all loose equipment with tape or Type III nylon cord. Tape the turbocharger opening and all windows.

(2) Rigging. Rig the load according to the steps in Figure 2-24.

Note: The power unit is rigged to fly sideways. The passenger side is designated as the front of the load. The apex fitting on the passenger side must be connected first to prevent the vehicle from tipping.

(3) Hookup. The static wand person discharges the static electricity with the static wand. The forward hookup person stands on the passenger's seat and places apex fitting 1 onto the forward cargo hook. The aft hookup person stands on the chassis and places apex fitting 2 onto the aft cargo hook. The hookup team then carefully dismounts the vehicle and remains close to the load as the helicopter removes slack from the sling legs. When successful hookup is assured, the hookup team quickly exits the area underneath the helicopter to the designated rendezvous point.

(4) Derigging. Derigging is the reverse of the preparation and rigging procedures in steps d (1) and d (2).

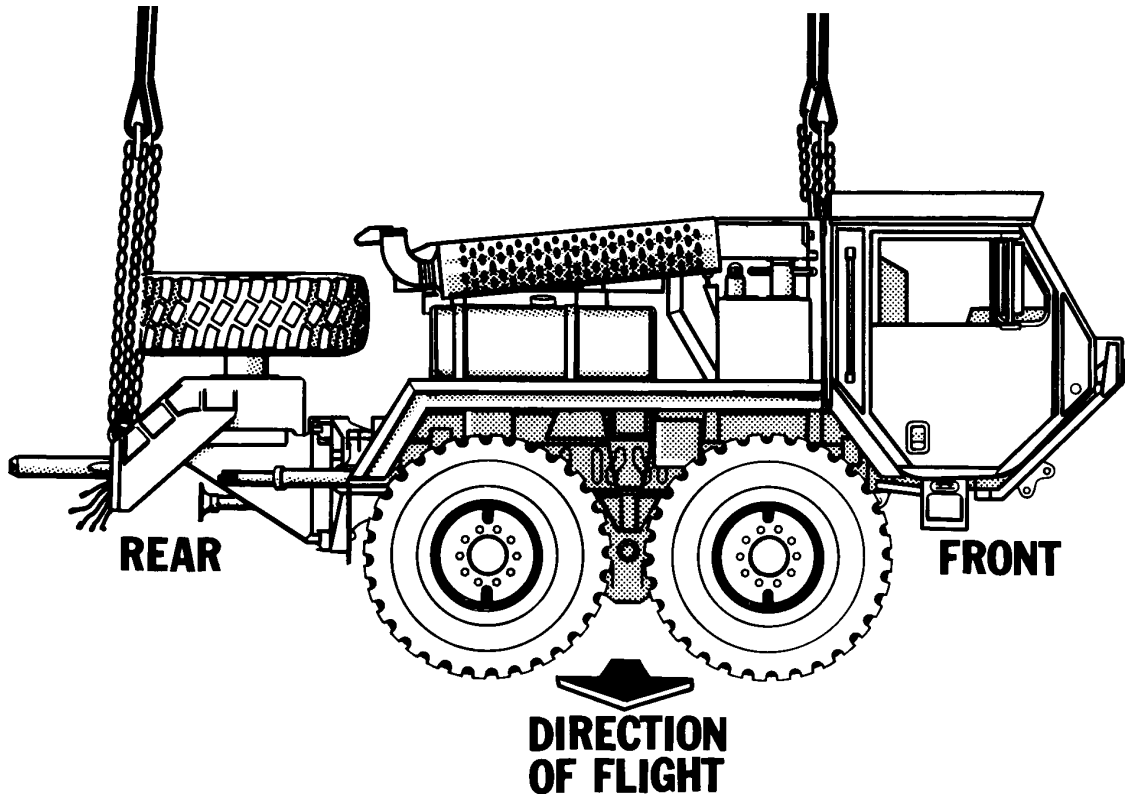

RIGGING STEPS

1. Connect 2 sling legs to apex fitting number 1. Position the apex fitting on top of the muffler area.

2. Loop the chain end of the left sling leg through the lift provision just aft of the passenger side of the cab and insert link 41 in the grabhook.

3. Using the coupling link, attach one additional chain length to the right sling leg chain. Loop the chain end of the right sling leg through the lift provision on the right rear corner just aft of the spare tire and insert link 3 in the grabhook.

4. Connect 2 sling legs to apex fitting number 2. Position the apex fitting on the engine deck on the driver's side.

5. Loop the chain end of the left sling leg through the lift provision just aft of the driver's side of the cab and insert link 41 in the grabhook.

6. Using the coupling link, attach one additional chain length to the right sling leg chain. Loop the chain end of the right sling leg through the lift provision on the left rear corner just aft of the spare tire and insert link 3 in the grabhook.

7. Secure all excess chain with tape or Type III nylon cord.

8. Cluster and tie or tape (breakaway technique) the sling legs in each sling set on top of the vehicle to prevent entanglement during hookup and lift-off.

Figure 2-24. Front Power Unit, MK48

2-27. M1098 HMMWV with Remote Landing Site Tower (RLST)

a. Applicability. The following item in Table 2-26 is certified for the helicopter(s) listed in the following table by the US Army Soldier Systems Center:

Table 2-26. M1098 HMMWV with Remote Landing Site Tower (RLST)

NOMENCLATURE	MAX WEIGHT (POUNDS)	SLING SET	LINK COUNT FRONT/ REAR	TYPE OF AIRCRAFT	RECOMMENDED AIRSPEED (KNOTS)
Remote Landing Site Tower (RLST)	8,460	15K	60/3	CH-53	130

b. Materials. The following materials are required to rig this load:

(1) Sling set (15,000-pound capacity) with one additional web ring.

(2) Chain length, part number 34080-4, from a 15,000-pound capacity sling set (8 each).

(3) Coupling link, part number 31611, from a 15,000-pound capacity sling set (8 each).

(4) Tape, adhesive, pressure-sensitive, 2-inch wide roll.

(5) Cord, nylon, Type III, 550-pound breaking strength.

(6) Webbing, cotton, 1/4-inch, 80-pound breaking strength.

(7) Felt sheet, cattle hair, Type IV, 1/2-inch or suitable padding.

(8) Strap, cargo, tie-down, CGU-1/B (as required).

c. Personnel. Two persons can prepare and rig this load in 15 minutes.

d. Procedures. The following procedures apply to this load:

(1) Preparation. Prepare the load using the following steps:

(a) Attach two chain lengths to each sling leg using the coupling links.

(b) Fold mirrors forward in front of the windshield for added protection and tie together with Type III nylon cord.

(c) Remove the cab doors. Stow and secure the doors against the rear of the seats with the tiedown straps. Tape the windshield, mirrors, and all glass items.

(d) Ensure the fuel tank is not over 3/4 full. Inspect fuel tank cap (should be in the vent position), oil filler cap, and battery caps for proper installation.

(e) Engage the vehicle parking brake and put the transmission in neutral.

(f) Ensure the front wheels are pointed straight ahead. Tie down the steering wheel, using the securing device attached under the dashboard.

(g) Install the lift provisions on the outer ends of the rear bumper by removing the tiedown provisions located inboard of the bumper end and installing them on the outer ends of the bumper.

(h) Place the RLST in the TRANSPORT mode according to the operator's manual.

(i) Ensure the RLST is securely attached to the truck. Secure all loose equipment inside the RLST with the hold down straps, tape, or Type III nylon cord. Close and secure the door.

(j) Secure the RSLT cover with the straps provided. Secure the loose ends with tape.

(2) Rigging. Rig the load according to the steps in Figure 2-25.

(3) Hookup. The hookup team stands beside the vehicle. The static wand person discharges the static electricity with the static wand. The forward hookup person places apex fitting 1 onto the forward cargo hook. The aft hookup person places apex fitting 2 onto the aft cargo hook. The hookup team then carefully dismounts the vehicle and remains close to the load as the helicopter removes slack from the sling legs. When successful hookup is assured, the hookup team quickly exits the area underneath the helicopter to the designated rendezvous point.

(4) Derigging. Derigging is the reverse of the preparation and rigging procedures in steps d (1) and d (2).

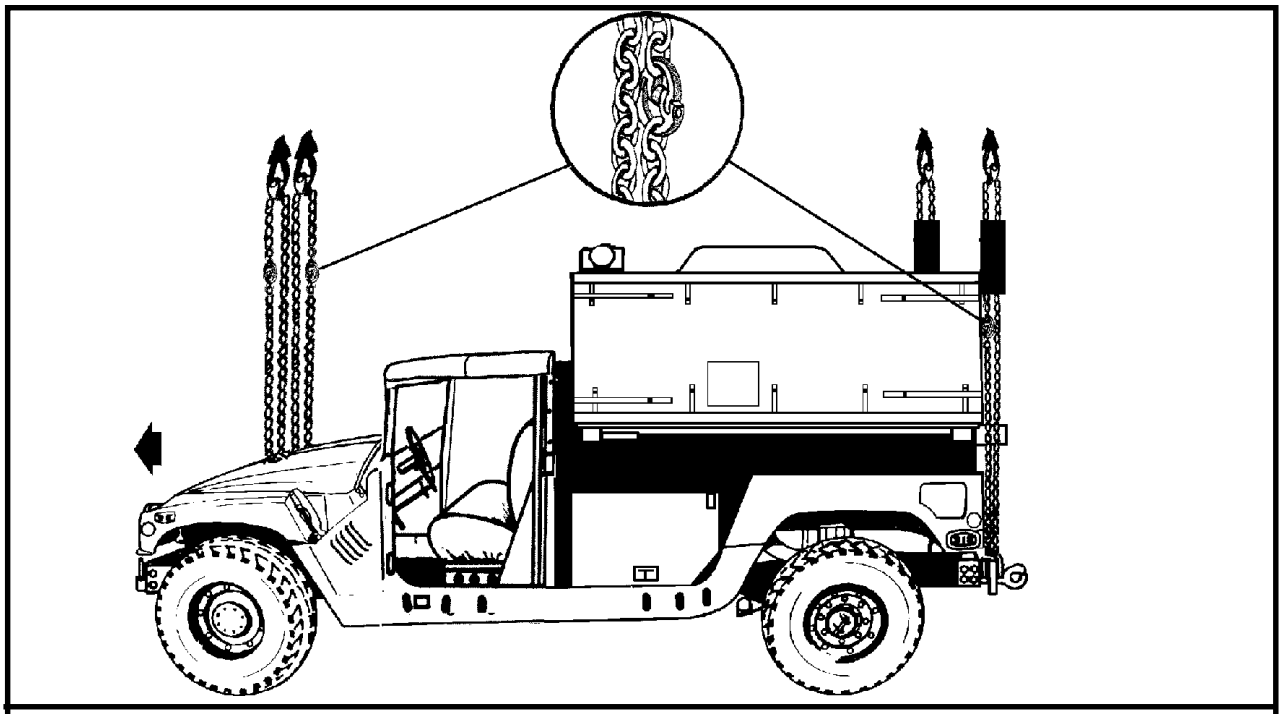

RIGGING STEPS

1. Connect 2 sling legs to web ring number 1. Position the apex fitting beside the hood of the vehicle.

2. Loop the chain end of the sling legs through their respective lift provisions that protrudes through the hood. Place the correct link from Table 2-26 in the grab hook.

3. Connect 2 sling legs to web ring number 2. Position the apex fitting the rear of the vehicle.

4. Loop the chain end of the sling legs through their respective lift provisions located on the outside end of the bumper. Place the correct link from Table 2-26 in the grab hook.

5. Secure all excess chain with tape or Type III nylon cord.

6. Pad the chains where they contact the RLST.

7. Cluster and tie or tape (breakaway technique) the sling legs in each sling set on top of the vehicle to prevent entanglement during hookup and lift-off.

Figure 2-25. M1098 HMMWV with Remote Landing Site Tower (RLST)

2-28. M1097A1 (H-HMMWV) with Fiberglass Cargo Bed Cover (CBC)

a. Applicability. The following items in Table 2-27 are certified for the helicopter(s) listed in the following table by the US Army Soldier Systems Center:

Table 2-27. M1097A1 (H-HMMWV) with Fiberglass Cargo Bed Cover (CBC)

NOMENCLATURE	MAX WEIGHT (POUNDS)	SLING SET	LINK COUNT FRONT/ REAR	TYPE OF AIRCRAFT	RECOMMENDED AIRSPEED (KNOTS)
Cargo Bed Cover, HMMWV, Type I, Camoflage, NSN 5411-01-647-3243	10,000	10K 15K	50/3 62/2	CH-47 CH-53	100
Cargo Bed Cover, HMMWV, Type I, Sand, NSN 5411-01-479-1928	10,000	10K 15K	50/3 62/2	CH-47 CH-53	100

b. Materials. The following materials are required to rig this load:

(1) Sling set (10,000-pound capacity) with one additional apex fitting.

(a) Chain length, part number 38850-00053-101, from a 10,000-pound capacity sling set (4 each).

(b) Coupling link, part number 5779125, from a 10,000-pound sling set (4 each).

OR

(2) Multileg sling set (15,000-pound capacity for the CH-53E only) with one additional web ring.

(a) Additional chain lengths, part number 34080-4 (8 each).

(b) Additional coupling links, part number 31611 (8 each).

(3) Tape, adhesive, pressure-sensitive, 2-inch wide roll.

(4) Cord, nylon, Type III, 550-pound breaking strength.

(5) Webbing, cotton, 1/4-inch, 80-pound breaking strength.

(6) Felt sheet, cattle hair, Type IV, 1/2-inch or suitable padding.

c. Personnel. Two persons can prepare and rig this load in 15 minutes.

d. Procedures. The following procedures apply to this load:

(1) Preparation. Prepare the load using the following steps:

(a) Extend the sling leg chains by connecting one additional chain length to each chain on a 10,000-pound capacity sling set with coupling links. Connect two additional chain lengths to each chain on the 15,000-pound multileg sling set chain with coupling links.

(b) Fold mirrors forward in front of the windshield for added protection and tie together with Type III nylon cord.

(c) Secure the cargo bed cover to the truck using wire rope or tie-down assemblies. Remove the doors. Store and secure the doors in the cab or in the cargo bed cover.

(d) Secure all equipment inside the cargo bed cover with tape, nylon cord, or lashings. Close and secure shelter vents and door with nylon cord or tape.

(e) Secure all equipment and cargo inside the

vehicle with tape, nylon cord, or lashings.

(f) Ensure the fuel tank is not over 3/4 full. Inspect fuel tank cap, oil filler cap, and battery caps for proper installation.

(g) Engage the vehicle parking brake and put the transmission in neutral.

(h) Ensure the front wheels are pointed straight ahead. Tie down the steering wheel, using the securing device attached under the dashboard.

(i) Tape the windshield in an X formation from corner to corner.

(j) Install the lift provisions on the outer ends of the rear bumper by removing the tiedown provisions located inboard of the bumper end and installing them on the outer ends of the rear bumper.

(2) Rigging. Rig the load according to the steps in Figure 2-26.

(3) Hookup. The hookup team stands on top of the cargo bed cover. The static wand person discharges the static electricity with the static wand. The forward hookup person places apex fitting 1 onto the forward cargo hook. The aft hookup person places apex fitting 2 onto the aft cargo hook. The hookup team then carefully dismounts the vehicle and remains close to the load as the helicopter removes slack from the sling legs. When successful hookup is assured, the hookup team quickly exits the area underneath the helicopter to the designated rendezvous point

(4) Derigging. Derigging is the reverse of the preparation and rigging procedures in steps d (1) and d (2).

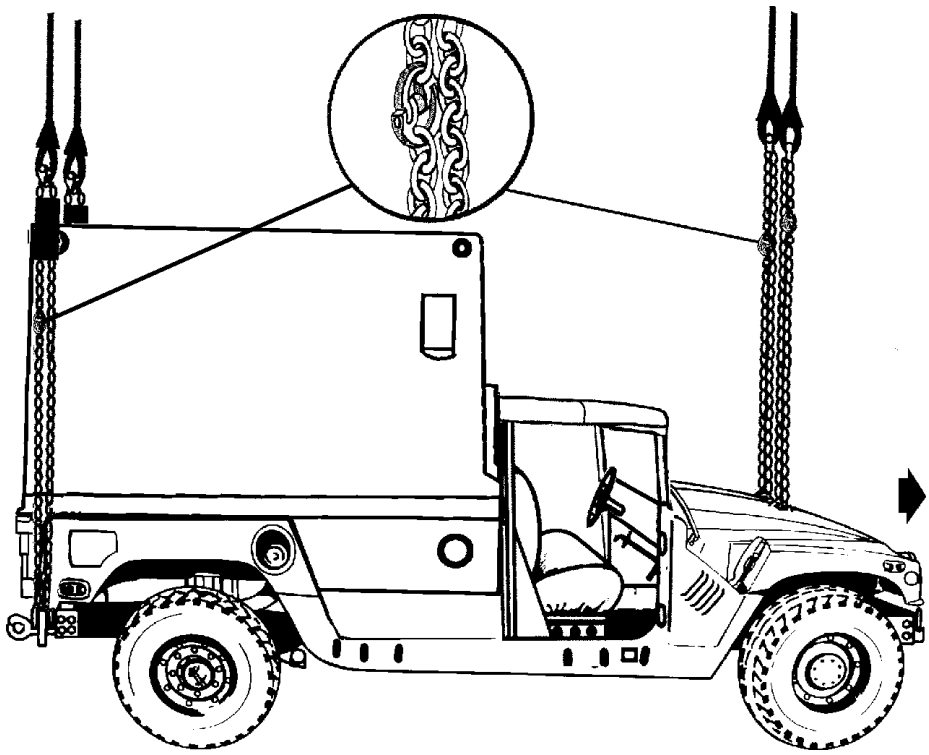

RIGGING STEPS

1. Connect 2 sling legs to apex fitting number 1. Position the apex fitting on top of the hood of the vehicle.

2. Loop the chain end of the sling legs through their respective lift provisions that protrudes through the hood. Place the correct link from Table 2-27 in the grab hook.

3. Connect 2 sling legs to apex fitting number 2. Position the apex fitting on top of the cargo bed cover.

4. Loop the chain end of the sling legs through their respective lift provisions located on the outside end of the bumper. Place the correct link from Table 2-27 in the grab hook.

5. Secure all excess chain with tape or Type III nylon cord.

6. Pad the chains where they contact the cargo bed cover.

7. Cluster and tie or tape (breakaway technique) the sling legs in each sling set on top of the vehicle to prevent entanglement during hookup and lift-off.

Figure 2-26. M1097A1 (H-HMMWV) with Fiberglass Cargo Bed Cover (CBC)

2-29. M56 Smoke Generating System on M1113 (HMMWV)

a. Applicability. The following item in Table 2-28 is certified for the helicopter(s) listed in the following table by the Soldier Systems Center:

Table 2-28. M56 Smoke Generating System on M1113 (HMMWV)

NOMENCLATURE	MAX WEIGHT (POUNDS)	SLING SET	LINK COUNT FRONT/ REAR	TYPE OF AIRCRAFT	RECOMMENDED AIRSPEED (KNOTS)
M1113 With M56 Smoke Generating System without Graphite in Tank	9,400	10K	50/3	CH-47	120
M1113 With M56 Smoke Generating System with Graphite in Tank	9,400	10K	50-Front 14-Right Rear 3-Left Rear	CH-47	120

b. Materials. The following materials are required to rig this load:

(1) Sling set (10,000-pound capacity) with one additional apex fitting.

(2) Tape, adhesive, pressure-sensitive, 2-inch wide roll.

(3) Cord, nylon, Type III, 550-pound breaking strength.

(4) Webbing, cotton, 1/4-inch, 80-pound breaking strength.

(5) Felt sheet, cattle hair, Type IV, 1/2-inch or suitable padding.

(6) Spreader bar, ambulance, NSN 4910-01-313-8839.

c. Personnel. Two persons can prepare and rig this load in 10 minutes.

d. Procedures. The following procedures apply to this load:

(1) Preparation. Prepare the load using the following steps:

(a) Place the transmission in neutral and set the parking brake.

(b) Ensure the fuel tank, the turbine fuel, and both fog oil tanks are not over 3/4 full.

(c) Set the three-way valve to the OFF position.

(d) Ensure the IR hopper cover latches are securely closed and the auxiliary hoses are attached to the mounting bracket at the forward end of the inboard fog oil tank.

(e) Secure all latches and doors with tape or Type III nylon cord.

(f) Ensure the front wheels are pointed straight ahead. Tie down the steering wheel, using the securing device attached under the dashboard.

(g) Fold the mirrors inward. Remove the doors and store and secure the doors in the cab with lashings or Type III nylon cord.

(h) Ensure the fuel tank is not over 3/4 full. Inspect fuel tank cap, oil filler cap, and battery caps for proper installation.

(i) Extend the spreader bar until the holes line up. Install the pin and engage the keeper.

(j) Position the spreader bar across the rear of the vehicle, resting on the power module and the weapons case. Attach the two spreader bar check cables to the larger hole openings, footman's loop, on the vehicle fenders.

(2) Rigging. Rig the load according to the steps in Figure 2-27.

(3) Hookup. The hookup team stands on the IR hopper-loading platform on the left side of the vehicle. The static wand person discharges the static electricity with

remains close to the load as the helicopter removes slack from the sling legs. When successful hookup is assured, the hookup team quickly exits the area underneath the helicopter to the designated rendezvous point.

(4) Derigging. Derigging is the reverse of the preparation and rigging procedures in steps d (1) and d (2).

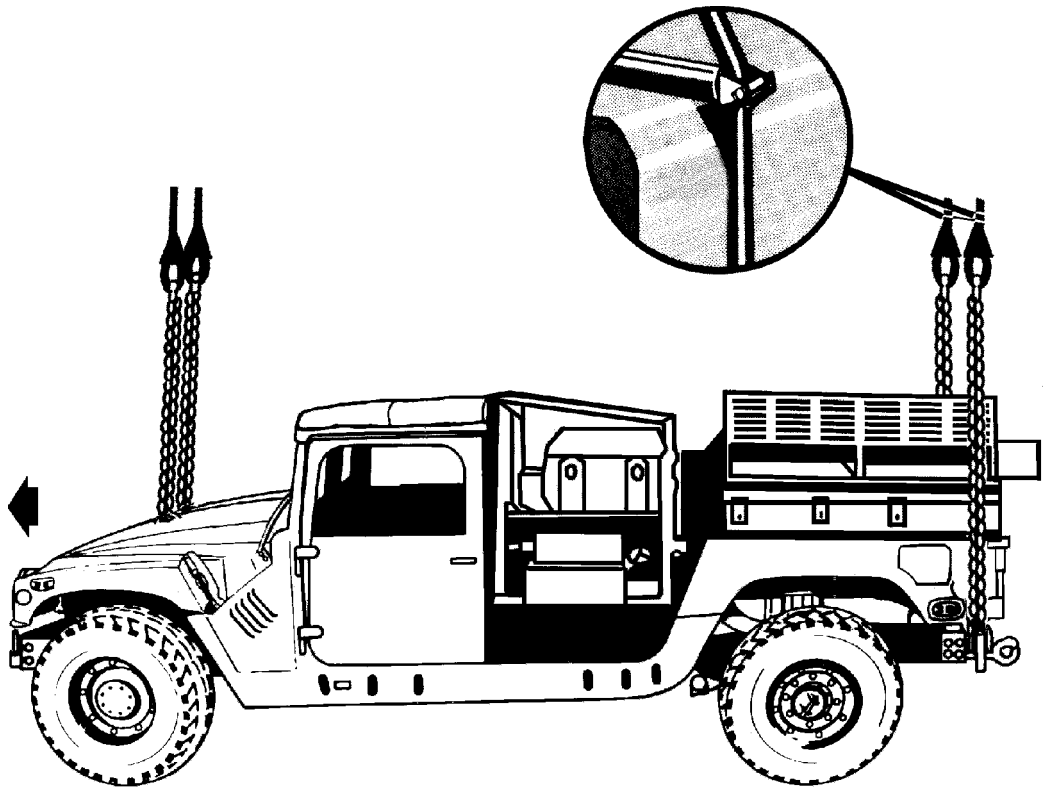

RIGGING STEPS

1. Connect 2 sling legs to apex fitting number 1. Position the apex fitting on top of the IR hopper or on the forward end of the fog oil tanks.

2. Loop the chain end of the sling legs through their respective lift provisions. Place the correct link from Table 2-28 in the grab hook. Secure the excess chain with tape or Type III nylon cord.

3. Connect 2 sling legs to apex fitting number 2. Position the apex fitting on top of the IR hopper or on the forward end of the fog oil tanks.

4. Place the nylon rope of sling legs 3 and 4 in the guides on the end of the spreader bar. Loop the chain end of the sling legs through their respective lift provision located on the outside end of the rear bumper. Place the correct link from Table 2-28 in the grab hook.

5. Pad the slings where they contact the vehicle.

6. Cluster and tie or tape (breakaway technique) the sling legs in each sling set on top of the load to prevent entanglement during hookup and lift-off.

Figure 2-27. M56 Smoke Generating System on M1113

2-30. M35A3 2 1/2-Ton Cargo Truck

a. Applicability. The following item in Table 2-29 is certified for the helicopter(s) listed in the following table by the Soldier Systems Center:

Table 2-29. M35A3 2 1/2-Ton Cargo Truck

NOMENCLATURE	MAX WEIGHT (POUNDS)	SLING SET	LINK COUNT FRONT/ REAR	TYPE OF AIRCRAFT	RECOMMENDED AIRSPEED (KNOTS)
Truck, Cargo, 2 1/2-Ton, M35A3	18,900	25K	3/50	CH-47	90

b. Materials. The following materials are required to rig this load:

(1) Sling set (25,000-pound capacity) with one additional apex fitting.

(a) Chain length, part number 38850-00053-102, from a 25,000-pound capacity sling set (4 each).

(b) Coupling link, part number 664241, from a 25,000-pound capacity sling set (4 each).

(2) Tape, adhesive, pressure-sensitive, 2-inch wide roll.

(3) Cord, nylon, Type III, 550-pound breaking strength.

(4) Webbing, cotton, 1/4-inch, 80-pound breaking strength.

(5) Felt sheet, cattle hair, Type IV, 1/2-inch or suitable padding.

(6) Strap, cargo, tiedown, CGU-1/B (as required).

c. Personnel. Two persons can prepare and rig this load in 15 minutes.

d. Procedures. The following procedures apply to this load:

(1) Preparation. Prepare the load using the following steps:

(a) Remove the cargo compartment canvas and bows. Secure the canvas and bows in the bed of the truck.

(b) Remove the cab top canvas, lower the windshield, fold the canvas over the windshield, and secure with Type III nylon cord.

(c) Secure the windshield in the down position with the CGU-1/B cargo tiedown strap.

(d) Safety tie the hood closed with Type III nylon cord around the hood latch and the grill.

(e) Ensure the fuel, oil filler, radiator, and battery caps are properly installed and secured. Ensure the battery compartment door is closed. Ensure the fuel tank is less than 3/4 full.

(f) Secure the seat cushions and doors with Type III nylon cord.

(g) Engage the emergency brake and place the transmission in neutral.

(h) Straighten the front wheels and secure the steering wheel with Type III nylon cord.

(i) Ensure the front lift provisions are in the transport position.

(j) Extend the sling leg chains by connecting one additional chain length to each chain on a 25,000-pound capacity sling set with coupling links.

(2) Rigging. Rig the load according to the steps in Figure 2-28.

NOTE: This vehicle flies aft end forward.

(3) Hookup. Two hookup teams are used for this load. The static discharge person discharges the static electricity. The forward hookup person stands in the truck bed and places apex fitting 1 onto the forward cargo hook. The aft hookup person stands on the passenger seat and places apex fitting 2 onto the aft cargo hook. The hookup teams then carefully dismount the load and remain close to the load as the helicopter removes slack from the sling legs. When successful hookup is assured, the hookup teams quickly exit the area underneath the helicopter to the designated rendezvous point.

(4) Derigging. Derigging is the reverse of the preparation and rigging procedures in steps d (1) and d (2).

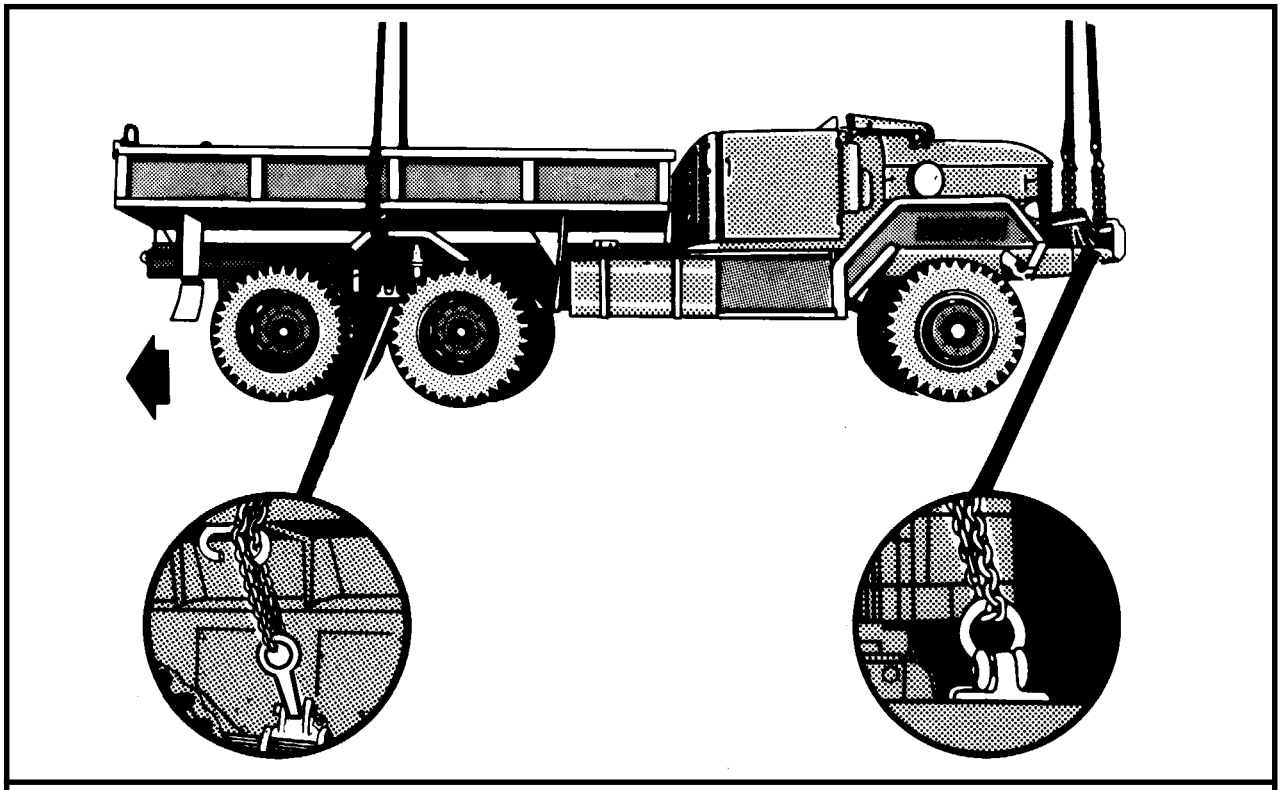

RIGGING STEPS

1. Place two sling legs on apex fitting number 1. Position apex fitting number 1 in the bed of the truck.

2. Loop the chain end of the left and right sling legs through their respective extended lift provision located between the rear wheels. Place the correct link from Table 2-29 in the grab hook.

3. Pull each grab hook up against the side of the truck and tie the chain in the chain guide bracket. Pull both grab hooks together over top of the bed and tie together with 1/4-inch cotton webbing.

3. Place two sling legs on apex fitting number 2. Position apex fitting number 2 on the hood.

4. Loop the chain end of the left and right sling legs through their respective lift provision located on the front bumper. Place the correct link from Table 2-29 in the grab hook. Secure the excess chain with tape or Type III nylon cord.

6. Raise the apex fittings above the load. Cluster and tie or tape (breakaway technique) the sling legs in each sling set together to prevent entanglement during hookup and lift-off.

Figure 2-28. M35A3 2 1/2-Ton Cargo Truck

2-31. M1097A2 (HMMWV) Soft Top Truck With Advanced Field Artillery Tactical Data Systems (AFATADS)

a. Applicability. The following items in Table 2-30 are certified for the helicopter(s) listed in the following table by the US Army Soldier Systems Center:

Table 2-30. M1097A2 (HMMWV) Soft Top Truck With Advanced Field Artillery Tactical Data Systems (AFATADS)

NOMENCLATURE	MAX WEIGHT (POUNDS)	SLING SET	LINK COUNT FRONT/ REAR	TYPE OF AIRCRAFT	RECOMMENDED AIRSPEED (KNOTS)
System 2: CHS-2 AN/GYG-3(V)1, with SINGARS AN/VRC-90, AN/VRC-92 and EPLRS installed in the bed. AN/VRC-92 installed in cab.	8,103	10K	50/3	CH-47	100
System 3: CHS-2 AN/GYG-3(V)3, with SINGARS AN/VRC-90, AN/VRC-92 and EPLRS installed in the bed. AN/VRC-92 installed in cab.	8,366	10K	50/3	CH-47	100
System 4: 2 each AN/GYK-37(V)2, with SINGARS AN/VRC-89, AN/VRC-92 and EPLRS.	7,790	10K	50/3	CH-47	100

b. Materials. The following materials are required to rig this load:

(1) Sling set (10,000-pound capacity) with one additional apex fitting.

(a) Chain length, part number 38850-00053-101, from a 10,000-pound capacity sling set (4 each).

(b) Coupling link, part number 577-0615, from a 10,000-pound sling set (4 each).

(2) Tape, adhesive, pressure-sensitive, 2-inch wide roll.

(3) Cord, nylon, Type III, 550-pound breaking strength.

(4) Webbing, cotton, 1/4-inch, 80-pound breaking strength.

(5) Padding, cellulose.

c. Personnel. Two persons can prepare and rig this load in 10 minutes.

d. Procedures. The following procedures apply to this load:

(1) Preparation. Prepare the load using the following steps:

(a) Extend the sling leg chains by connecting one additional chain length to each chain on a 10,000-pound capacity sling set with coupling links.

(b) Fold mirrors forward in front of the windshield for added protection and tie together with Type III nylon cord.

(c) Secure all equipment and cargo inside the vehicle with tape, nylon cord, or lashings. Remove and secure the doors in the front of the vehicle.

(d) Ensure the fuel tank is not over 3/4 full. Inspect fuel tank cap, oil filler cap, and battery caps for proper installation.

(e) Engage the vehicle parking brake and put the transmission in neutral.

(f) Ensure the front wheels are pointed straight ahead. Tie down the steering wheel, using the securing device attached under the dashboard.

(g) Tape the windshield in an X formation from corner to corner.

(h) Install the lift provisions on the outer ends of the rear bumper.

(i) Extend the sling leg chains by connecting one additional chain length to each chain using the coupling links.

(2) Rigging. Rig the load according to the steps in Figure 2-29.

(3) Hookup. The hookup team stands on top of the vehicle. The static wand person discharges the static electricity with the static wand. The forward hookup person places apex fitting 1 onto the forward cargo hook. The aft hookup person places apex fitting 2 onto the aft cargo hook. The hookup team then carefully dismounts the vehicle and remains close to the load as the helicopter removes slack from the sling legs. When successful hookup is assured, the hookup team quickly exits the area underneath the helicopter to the designated rendezvous point.

(4) Derigging. Derigging is the reverse of the preparation and rigging procedures in steps d (1) and d (2).

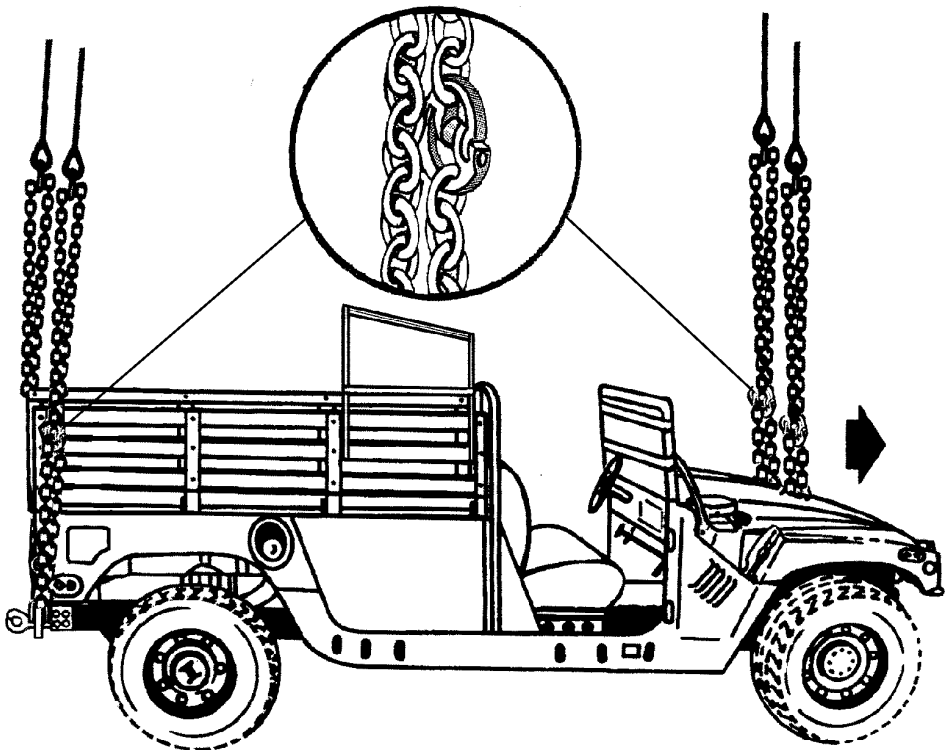

RIGGING STEPS

1. Connect 2 sling legs to apex fitting number 1. Position the apex fitting on top of the shelter.

2. Loop the chain end of the sling legs through their respective lift provisions that protrudes through the hood. Place the correct link from Table 2-30 in the grab hook.

3. Connect 2 sling legs to apex fitting number 2. Position the apex fitting on top of the shelter.

4. Loop the chain end of the sling legs through their respective lift provisions located on the outer ends of the rear bumper. Place the correct link from Table 2-30 in the grab hook.

5. Secure all excess chain with tape or Type III nylon cord.

6. Cluster and tie or tape (breakaway technique) the sling legs in each sling set on top of the vehicle to prevent entanglement during hookup and lift-off.

Figure 2-29. M1097A2 (HMMWV) Soft Top Truck With Advanced Field Artillery Tactical Data Systems (AFATADS)

CAUTION

Do not use the lift shackles located near the center of the rear bumper for sling load lift provisions.

2-32. M1037 (HMMWV) With Compressed Air-Foam System, Mobile (CAFSM)

a. Applicability. The following item in Table 2-31 is certified for the helicopter(s) listed in the following table by the US Army Soldier Systems Center:

Table 2-31. M1037 (HMMWV) With Compressed Air-Foam System, Mobile (CAFSM)

NOMENCLATURE	MAX WEIGHT (POUNDS)	SLING SET	LINK COUNT FRONT/ REAR	TYPE OF AIRCRAFT	RECOMMENDED AIRSPEED (KNOTS)
Compressed Air-Foam System, Mobile	6,400 (EMPTY)	15K	40/3	CH-53	130

Note: The water tank in the CAFSM MUST BE EMPTY for sling loading.

b. Materials. The following materials are required to rig this load:

(1) Sling set (15,000-pound capacity for the CH-53 only) with one additional web ring.

(2) Tape, adhesive, pressure-sensitive, 2-inch wide roll.

(3) Cord, nylon, Type III, 550-pound breaking strength.

(4) Webbing, cotton, 1/4-inch, 80-pound breaking strength.

c. Personnel. Two persons can prepare and rig this load in 15 minutes.

d. Procedures. The following procedures apply to this load:

(1) Preparation. Prepare the load using the following steps:

(a) Fold mirrors forward in front of the windshield for added protection and tie together with Type III nylon cord. Remove the canvas cab top and the doors. Secure to the seats with Type III nylon cord.

(b) Ensure the CAFSM is secured to the truck. Secure all lids, doors, and vents on the CAFSM with tape or Type III nylon cord. Safety tie all chains and hoses with tape or Type III nylon cord.

(c) Secure all equipment and cargo inside the vehicle with tape, nylon cord, or lashings.

(d) Ensure the fuel tank is not over 3/4 full. Inspect fuel tank cap, oil filler cap, and battery caps for proper installation.

(e) Engage the vehicle parking brake and put the transmission in neutral.

(f) Ensure the front wheels are pointed straight ahead. Tie down the steering wheel, using the securing device attached under the dashboard.

(g) Tape the windshield in an X formation from corner to corner.

(2) Rigging. Rig the load according to the steps in Figure 2-30.

(3) Hookup. The hookup team stands on top of the vehicle. The static wand person discharges the static electricity with the static wand. The forward hookup person places apex fitting 1 onto the forward cargo hook. The aft hookup person places apex fitting 2 onto the aft cargo hook. The hookup team then carefully dismounts the vehicle and remains close to the load as the helicopter removes slack from the sling legs. When successful hookup is assured, the hookup team quickly exits the area underneath the helicopter to the designated rendezvous point.

(4) Derigging. Derigging is the reverse of the preparation and rigging procedures in steps d (1) and d (2).

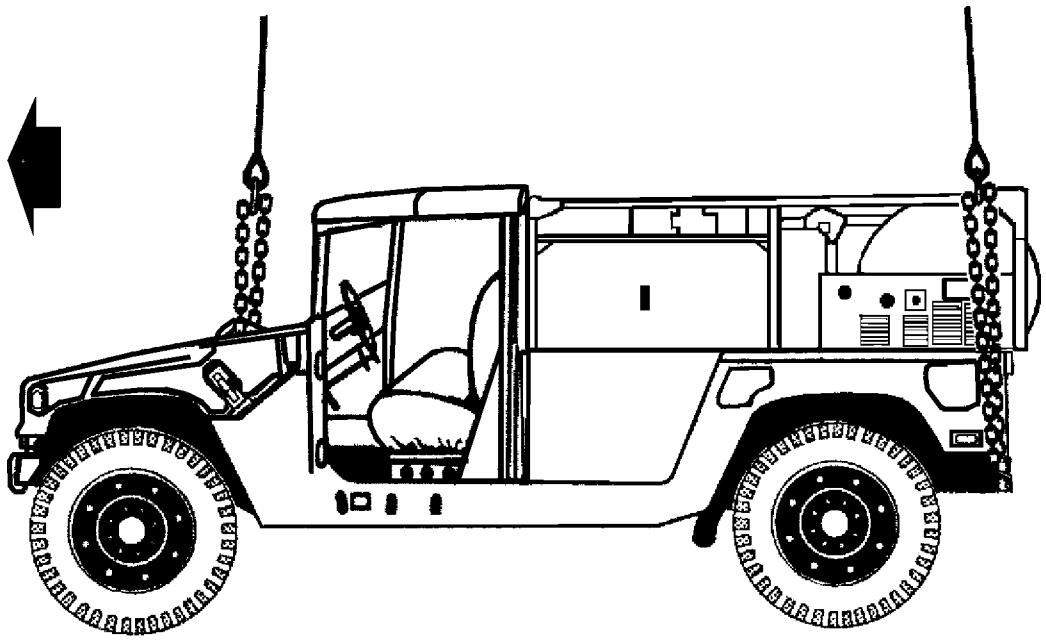

RIGGING STEPS

1. Connect 2 sling legs to apex fitting number 1. Position the apex fitting on the hood of the vehicle.

2. Loop the chain end of the sling legs through their respective lift provisions that protrudes through the hood. Place the correct link from Table 2-31 in the grab hook.

3. Connect 2 sling legs to apex fitting number 2. Position the apex fitting in the cargo bed of the vehicle.

4. Loop the chain end of the sling legs through their respective lift shackle on the outside end of the rear bumper. Place the correct link from Table 2-31 in the grab hook.

5. Secure all excess chain with tape or Type III nylon cord.

6. Cluster and tie or tape (breakaway technique) the sling legs in each sling set on top of the vehicle to prevent entanglement during hookup and lift-off.

Figure 2-30. M1037 (HMMWV) With Compressed Air-Foam System, Mobile (CAFSM)

CAUTION

Do not use the lift shackles located near the center of the rear bumper for sling load lift provisions.

2-33. Interim Fast Attack Vehicle Truck (IFAV), Long Wheel Base

a. Applicability. The following item in Table 2-32 is certified for the helicopter(s) listed in the following table by the US Army Soldier Systems Center:

Table 2-32. Interim Fast Attack Vehicle (IFAV) Truck, Long Wheel Base

NOMENCLATURE	MAX WEIGHT (POUNDS)	SLING SET	LINK COUNT FRONT/ REAR	TYPE OF AIRCRAFT	RECOMMENDED AIRSPEED (KNOTS)
Interim Fast Attack Vehicle Truck, Long Wheel Base	5,720	15K	40/3	CH-53	120

b. Materials. The following materials are required to rig this load:

(1) Sling set (15,000-pound capacity for the CH-53 only) with one additional web ring.

(2) Tape, adhesive, pressure-sensitive, 2-inch wide roll.

(3) Cord, nylon, Type III, 550-pound breaking strength.

(4) Webbing, cotton, 1/4-inch, 80-pound breaking strength.

(5) Padding, cellulose.

c. Personnel. Two persons can prepare and rig this load in 10 minutes.

d. Procedures. The following procedures apply to this load:

(1) Preparation. Prepare the load using the following steps:

(a) Fold mirrors forward in front of the windshield for added protection and tie together with Type III nylon cord. Remove all canvas covers.

(b) Secure all equipment and cargo inside the vehicle with tape, nylon cord, or lashings.

(c) Ensure the fuel tank is not over 3/4 full. Inspect fuel tank cap, oil filler cap, and battery caps for proper installation.

(d) Engage the vehicle parking brake and put the transmission in neutral.

(e) Ensure the front wheels are pointed straight ahead. Tie down the steering wheel using Type III nylon cord.

(f) Tape the windshield in an X formation from corner to corner.

(2) Rigging. Rig the load according to the steps in Figure 2-31.

(3) Hookup. The hookup team stands on the vehicle. The static wand person discharges the static electricity with the static wand. The forward hookup person places apex fitting 1 onto the forward cargo hook. The aft hookup person places apex fitting 2 onto the aft cargo hook. The hookup team then carefully dismounts the vehicle and remains close to the load as the helicopter removes slack from the sling legs. When successful hookup is assured, the hookup team quickly exits the area underneath the helicopter to the designated rendezvous point.

(4) Derigging. Derigging is the reverse of the preparation and rigging procedures in steps d (1) and d (2).

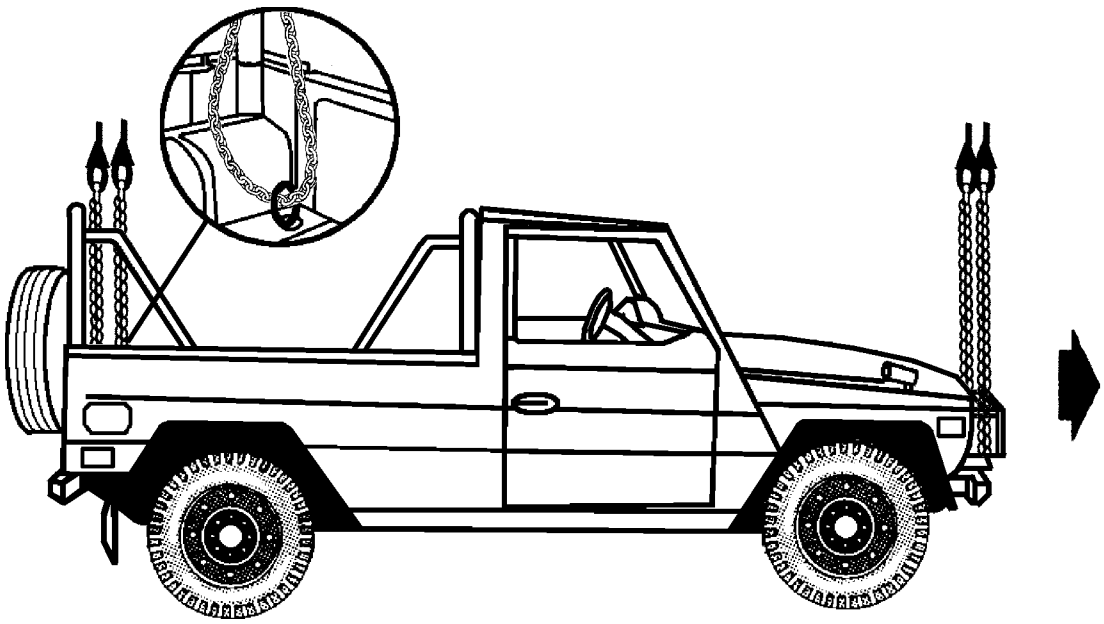

RIGGING STEPS

1. Connect 2 sling legs to web ring number 1. Position the apex fitting on the hood of the vehicle.

2. Loop the chain end of the sling legs through their respective lift provisions located on the front bumper of the vehicle. Place the correct link from Table 2-32 in the grab hook.

3. Connect 2 sling legs to web ring number 2. Position the apex fitting in the cargo bed of the vehicle.

4. Loop the chain end of the sling legs through their respective lift provision located in the rear corners of the cargo bed. Place the correct link from Table 2-32 in the grab hook.

5. Secure all excess chain with tape or Type III nylon cord.

6. Cluster and tie or tape (breakaway technique) the sling legs in each sling set on top of the vehicle to prevent entanglement during hookup and lift-off.

Figure 2-31. Interim Fast Attack Vehicle (IFAV) Truck, Long Wheel Base

2-34. Dual Interim Fast Attack Vehicle (IFAV) Trucks, Long Wheel Base, Side by Side (Shotgun Method)

a. Applicability. The following item in Table 2-33 is certified for the helicopter(s) listed in the following table by the US Army Soldier Systems Center:

Table 2-33. Dual Interim Fast Attack Vehicle (IFAV) Trucks, Long Wheel Base, Side by Side (Shotgun Method)

NOMENCLATURE	MAX WEIGHT (POUNDS)	SLING SET	LINK COUNT FRONT/ REAR	TYPE OF AIRCRAFT	RECOMMENDED AIRSPEED (KNOTS)
Interim Fast Attack Vehicle Truck, Long Wheel Base	11,440	15K	Listed in Rigging Steps	CH-53	120

b. Materials. The following materials are required to rig this load:

(1) Sling set (15,000-pound capacity (2 each).

(2) Tape, adhesive, pressure-sensitive, 2-inch wide roll.

(3) Cord, nylon, Type III, 550-pound breaking strength.

(4) Webbing, cotton, 1/4-inch, 80-pound breaking strength.

(5) Padding, cellulose.

(6) Strap, tiedown, cargo, CGU-1/B (3 each).

c. Personnel. Three persons can prepare and rig this load in 15 minutes.

d. Procedures. The following procedures apply to this load:

(1) Preparation. Prepare the load using the following steps:

(a) Fold mirrors forward in front of the windshield for added protection and tie together with Type III nylon cord. Remove all canvas covers.

(b) Secure all equipment and cargo inside the vehicle with tape, nylon cord, or lashings.

(c) Ensure the fuel tank is not over 3/4 full. Inspect fuel tank cap, oil filler cap, and battery caps for proper installation.

(d) Engage the vehicle parking brake and put the transmission in neutral.

(e) Ensure the front wheels are pointed straight ahead. Tie down the steering wheel using Type III nylon cord.

(f) Tape the windshield in an X formation from corner to corner.

(g) Secure the vehicle camouflage net (in the bag) to each vehicle. Attach one net to the forward roadside of the right vehicle and the other to the rear curbside of the left vehicle.

(h) Position the vehicles as close together as possible and ensure the vehicles are facing in the same direction. Route a CGU-1/B cargo tiedown strap through the inboard tiedown provision located below the front bumper of each vehicle. Connect the hooks together and tighten the straps.

(i) Route a CGU-1/B cargo tiedown stap through the pintles of both vehicles and connect the hooks together.

Tighten the strap. Route the second CGU-1/B cargo tiedown strap around the inboard roll bars located directly behind the front seat and connect the hooks together. Tighten the straps.

(2) Rigging. Rig the load according to the steps in Figure 2-32.

(3) Hookup. The hookup team stands on the vehicle. The static wand person discharges the static electricity with the static wand. The forward hookup person places apex fitting 1 onto the forward cargo hook. The aft hookup person places apex fitting 2 onto the aft cargo hook. The hookup team then carefully dismounts the vehicle and remains close to the load as the helicopter removes slack from the sling legs. When successful hookup is assured, the hookup team quickly exits the area underneath the helicopter to the designated rendezvous point.

(4) Derigging. Derigging is the reverse of the preparation and rigging procedures in steps d (1) and d (2).

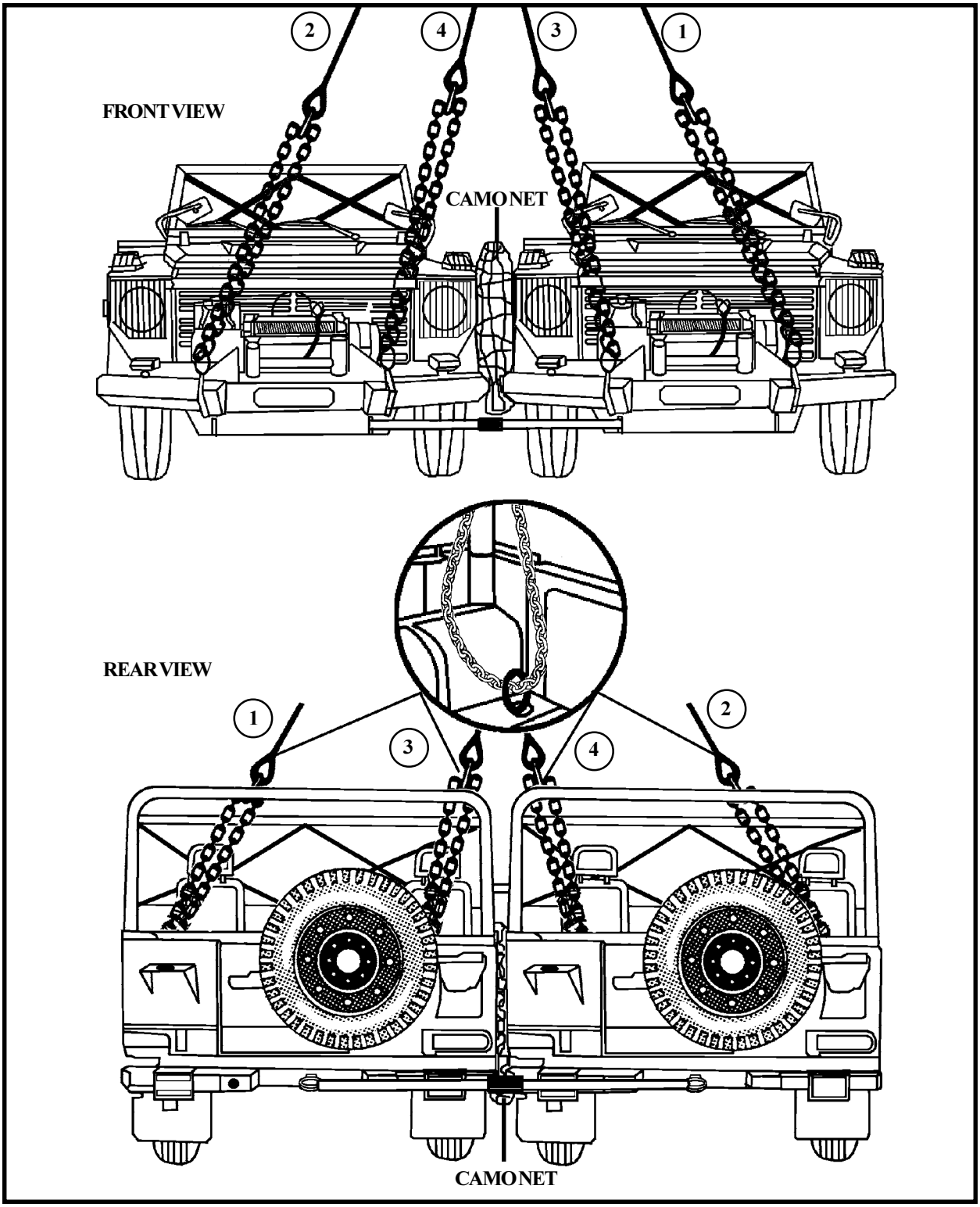

Figure 2-32. Dual Interim Fast Attack Vehicle (IFAV) Trucks, Long Wheel Base, Side by Side (Shotgun Method)

RIGGING STEPS

1. Position sling set 1 on the hood of one of the vehicles.

2. Loop the chain end of sling legs 1 and 2 through their respective outboard lift provisions located on the front of each vehicle. Place link 3 in the grab hook.

3. Loop the chain end of sling legs 3 and 4 through their respective inboard lift provisions located on the front of each vehicle. Place link 10 in the grab hook. Ensure the chains are routed through the chain guides.

4. Position sling set 2 in the bed of one of the vehicles.

5. Loop the chain end of sling legs 1 and 2 through their respective lift provision located in the outside rear corners of the cargo bed. Place link 45 in the grab hook.

6. Loop the chain end of sling legs 3 and 4 through their respective lift provision located in the inside rear corners of the cargo bed. Place link 60 in the grab hook.

7. Secure all excess chain with tape or Type III nylon cord.

8. Cluster and tie or tape (breakaway technique) the sling legs in each sling set on top of the vehicle to prevent entanglement during hookup and lift-off.

Figure 2-32. Dual Interim Fast Attack Vehicle (IFAV) Trucks, Long Wheel Base, Side by Side (Shotgun Method) (continued)

2-35. M1097A2 Shelter Carrier (HMMWV) With Special Operations Media System (SOMS-B) in S-788G Shelter (LMS)

a. Applicability. The following item in Table 2-34 is certified for the helicopter(s) listed in the following table by the US Army Soldier Systems Center:

Table 2-34. M1097A2 Shelter Carrier (HMMWV) With Special Operations Media System (SOMS-B) in S-788G Shelter (LMS)

NOMENCLATURE	MAX WEIGHT (POUNDS)	SLING SET	LINK COUNT FRONT/ REAR	TYPE OF AIRCRAFT	RECOMMENDED AIRSPEED (KNOTS)
Special Operations Media System	9,080	10K	50/3	CH-47	120

b. Materials. The following materials are required to rig this load:

(1) Sling set (10,000-pound capacity) with one additional apex fitting.

(a) Chain length, part number 38850-00053-101, from a 10,000-pound capacity sling set (4 each).

(b) Coupling link, part number 5779125, from a 10,000-pound sling set (4 each).

(2) Tape, adhesive, pressure-sensitive, 2-inch wide roll.

(3) Cord, nylon, Type III, 550-pound breaking strength.

(4) Webbing, cotton, 1/4-inch, 80-pound breaking strength.

c. Personnel. Two persons can prepare and rig this load in 20 minutes.

d. Procedures. The following procedures apply to this load:

(1) Preparation. Prepare the load using the following steps:

(a) Extend the sling leg chains by connecting one additional chain length to each chain on a 10,000-pound capacity sling set with coupling links.

(b) Fold mirrors forward in front of the windshield for added protection and tie together with Type III nylon cord.

(c) Secure all equipment inside the shelter with tape, nylon cord, or lashings; close and secure shelter vents and door with nylon cord or tape.

(d) Secure environmental control unit cover with duct tape.

(e) Disconnect the power cord from the rear panel and secure it to the rear platform with Type III nylon cord. Lower the power panel door and secure the door.

(f) Secure all equipment and cargo inside the vehicle with tape, nylon cord, or lashings. Secure the doors shut if installed.

(g) Ensure the fuel tank is not over 3/4 full. Inspect fuel tank cap, oil filler cap, and battery caps for proper installation.

(h) Engage the vehicle parking brake and put the transmission in neutral.

(i) Ensure the front wheels are pointed straight ahead. Tie down the steering wheel, using the securing device attached under the dashboard.

(j) Tape the windshield in an X formation from corner to corner.

(k) Install the lift provisions on the outer ends of the rear bumper.

(l) Tie the shelter's rear lift rings together across the top of the shelter with Type III nylon cord. Place the rings in the up position facing the front of the vehicle.

(2) Rigging. Rig the load according to the steps in Figure 2-33.

NOTE: Ensure the chains on the left rear sling leg are routed between the shelter and the 30 meter mast.

(3) Hookup. The hookup team stands on top of the shelter. The static wand person discharges the static electricity with the static wand. The forward hookup person places apex fitting 1 onto the forward cargo hook. The aft hookup person places apex fitting 2 onto the aft cargo hook. The hookup team then carefully dismounts the vehicle and remains close to the load as the helicopter removes slack from the sling legs.When successful hookup is assured, the hookup team quickly exits the area underneath the helicopter to the designated rendezvous point.

NOTE: Hookup of this load presents substantial risk of damage to the load or injury to the hookup personnel. Use of a reach pendant is recommended for this load.

(4) Derigging. Derigging is the reverse of the preparation and rigging procedures in steps d (1) and d (2).

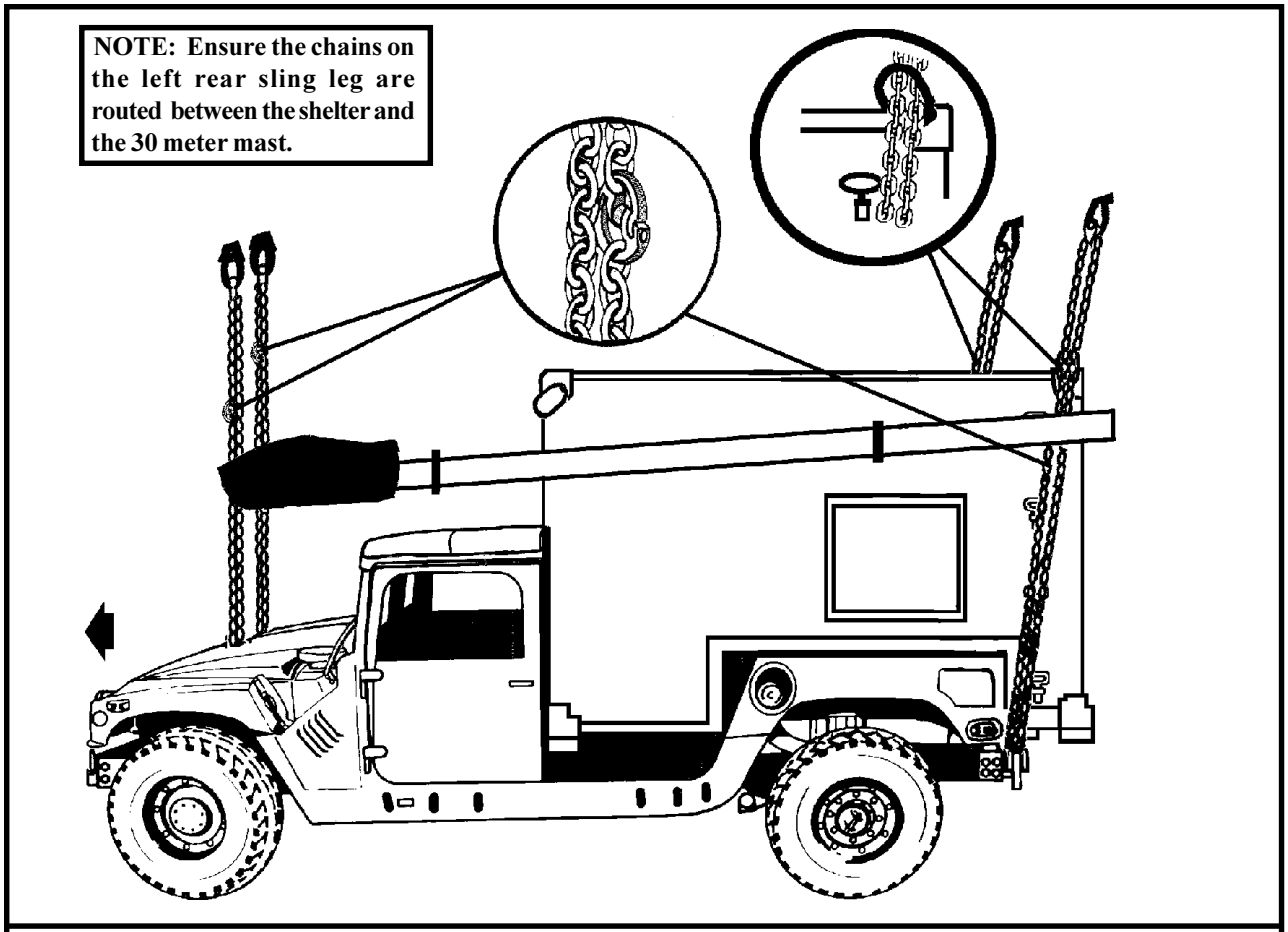

RIGGING STEPS

1. Connect 2 sling legs to apex fitting number 1. Position the apex fitting on top of the shelter.

2. Loop the chain end of the sling legs through their respective lift provisions that protrudes through the hood. Place the correct link from Table 2-34 in the grab hook.

3. Connect 2 sling legs to apex fitting number 2. Position the apex fitting on top of the shelter.

4. Route the right sling leg chain through the right rear shelter lift ring to the right rear lift provision located on the outer end of the rear bumper. Continue routing the chain back through the right rear shelter lift ring and back to the grab hook. Place the correct link from Table 2-34 in the grab hook. Repeat the procedure using the left sling leg chain, left rear shelter lift ring, and the left lift provision located on the end of the bumper.

5. Remove all the excess slack between the lift provisions and the shelter lift rings.

6. Secure all excess chain with tape or Type III nylon cord.

7. Cluster and tie or tape (breakaway technique) the sling legs in each sling set on top of the vehicle to prevent entanglement during hookup and lift-off.

Figure 2-33. M1097A2 Shelter Carrier (HMMWV) With Special Operations Media System (SOMS-B) in S-788G Shelter (LMS) Using Shelter Lift Rings as Sling Guides

CAUTION

Do not use the lift shackles located near the center of the rear bumper for sling load lift provisions.

2-36. Prophet AN/MLQ-40(V) on M1097 HMMWV

a. Applicability. The following item in Table 2-35 is certified for the helicopter(s) listed in the following table by the US Army Soldier Systems Center:

Table 2-35. Prophet AN/MLQ-40(V) on M 1097 HMMWV

NOMENCLATURE	MAX WEIGHT (POUNDS)	SLING SET	LINK COUNT FRONT/ REAR	TYPE OF AIRCRAFT	RECOMMENDED AIRSPEED (KNOTS)
Prophet, AN/MLQ-40(V)	10,000	10K	45/10	CH-47	90

b. Materials. The following materials are required to rig this load:

(1) Sling set (10,000-pound capacity) with one additional apex fitting.

(a) Chain length, part number 38850-00053-101, from a 10,000-pound capacity sling set (4 each).

(b) Coupling link, part number 5779125, from a 10,000-pound sling set (4 each).

(2) Tape, adhesive, pressure-sensitive, 2-inch wide roll.

(3) Cord, nylon, Type III, 550-pound breaking strength.

(4) Webbing, cotton, 1/4-inch, 80-pound breaking strength.

c. Personnel. Two persons can prepare and rig this load in 15 minutes.

d. Procedures. The following procedures apply to this load:

(1) Preparation. Prepare the load using the following steps:

(a) Extend the sling leg chains by connecting one additional chain length to each chain on a 10,000-pound capacity sling set with coupling links.

(b) Fold mirrors forward in front of the windshield for added protection and tie together with Type III nylon cord.

(c) Ensure the cargo bed cover is secured to the truck. Secure all equipment inside the shelter with tape, nylon cord, or lashings; close and secure shelter vents and door with nylon cord or tape.

(d) Secure all equipment and cargo inside the vehicle with tape, nylon cord, or lashings. Secure the doors shut if installed.

(e) Ensure the fuel tank is not over 3/4 full. Inspect fuel tank cap, oil filler cap, and battery caps for proper installation.

(f) Engage the vehicle parking brake and put the transmission in neutral.

(g) Ensure the front wheels are pointed straight ahead. Tie down the steering wheel, using the securing device attached under the dashboard.

(h) Tape the windshield in an X formation from corner to corner.

(i) Install the lift provisions on the outer ends of the rear bumper.

(2) Rigging. Rig the load according to the steps in Figure 2-34.

(3) Hookup. The hookup team stands on top of the shelter. The static wand person discharges the static electricity with the static wand. The forward hookup person places apex fitting 1 onto the forward cargo hook. The aft hookup person places apex fitting 2 onto the aft cargo hook. The hookup team then carefully dismounts the vehicle and remains close to the load as the helicopter removes slack from the sling legs.When successful hookup is assured, the hookup team quickly exits the area underneath the helicopter to the designated rendezvous point.

(4) Derigging. Derigging is the reverse of the preparation and rigging procedures in steps d (1) and d (2).

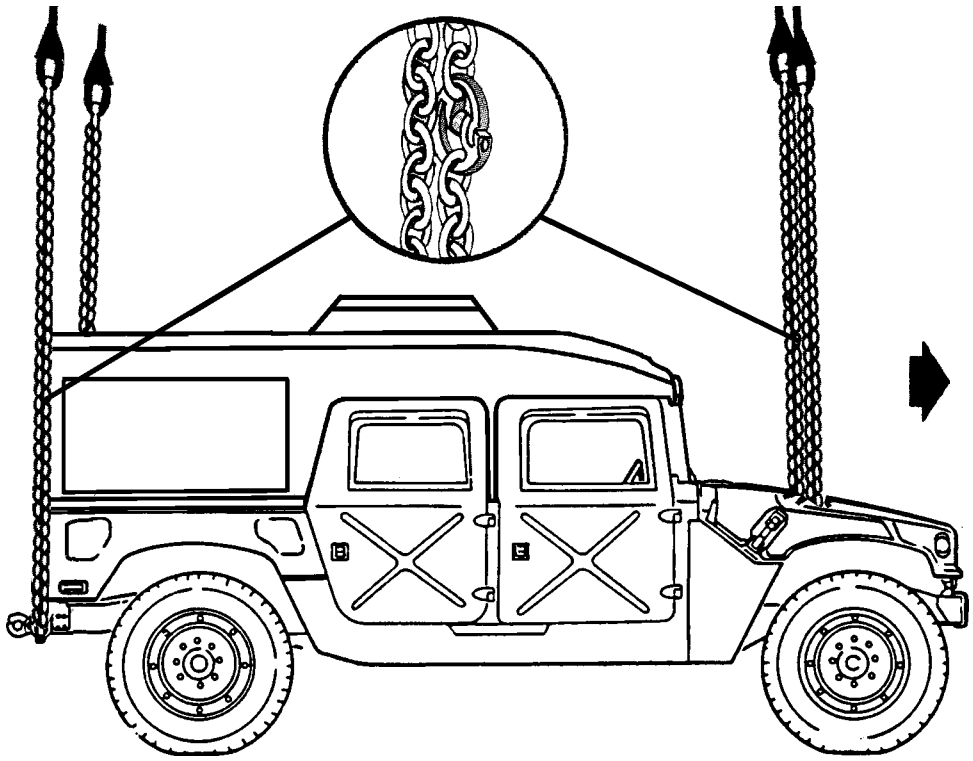

RIGGING STEPS

1. Connect 2 sling legs to apex fitting number 1. Position the apex fitting on top of the shelter.

2. Loop the chain end of the sling legs through their respective lift provisions that protrudes through the hood. Place the correct link from Table 2-35 in the grab hook.

3. Connect 2 sling legs to apex fitting number 2. Position the apex fitting on top of the shelter.

4. Route the right sling leg chain through the right rear lift provision located on the outer end of the rear bumper. Place the correct link from Table 2-35 in the grab hook. Repeat the procedure using the left sling leg chain and the left lift provision located on the end of the bumper.

5. Remove all the excess slack between the lift provisions and the shelter lift rings.

6. Secure all excess chain with tape or Type III nylon cord.

7. Cluster and tie or tape (breakaway technique) the sling legs in each sling set on top of the vehicle to prevent entanglement during hookup and lift-off.

Figure 2-34. Prophet AN/MLQ-40(V) on M 1097 HMMWV

2-37. M998 Truck, Cargo, 1 1/4-Ton (HMMWV) With AMTECH Helmet Hardtop

a. Applicability. The following item in Table 2-36 is certified for the helicopter(s) listed in the following table by the US Army Soldier Systems Center:

Table 2-36. M998 Truck, Cargo, 1 1/4-Ton (HMMWV) With AMTECH Helmet Hardtop

NOMENCLATURE	MAX WEIGHT (POUNDS)	SLING SET	LINK COUNT FRONT/ REAR	TYPE OF AIRCRAFT	RECOMMENDED AIRSPEED (KNOTS)
Truck, 1 1/4-Ton, HMMWV, M998 with Helmet Hardtop, Basic, Models 1551/1551-0/1551-1/1551-3/1551-4/1551-5/1551-6/-1552/1552-0/1552-1/1552-3/1552-4/1552--5/1552-6	7,700	10K	50/3	CH-47	130

b. Materials. The following materials are required to rig this load:

(1) Sling set (10,000-pound capacity) with one additional apex fitting.

(a) Chain length, part number 38850-00053-101, from a 10,000-pound capacity sling set (4 each).

(b) Coupling link, part number 5779125, from a 10,000-pound sling set (4 each).

(2) Tape, adhesive, pressure-sensitive, 2-inch wide roll.

(3) Cord, nylon, Type III, 550-pound breaking strength.

(4) Webbing, cotton, 1/4-inch, 80-pound breaking strength.

c. Personnel. Two persons can prepare and rig this load in 20 minutes.

d. Procedures. The following procedures apply to this load:

(1) Preparation. Prepare the load using the following steps:

(a) Extend the sling leg chains by connecting one additional chain length to each chain on a 10,000-pound capacity sling set with coupling links.

(b) Fold mirrors forward in front of the windshield for added protection and tie together with Type III nylon cord.

(c) Ensure the cargo bed cover is secured to the truck. Secure all equipment inside the shelter with tape, nylon cord, or lashings; close and secure shelter vents and door with nylon cord or tape.

(d) Secure all equipment and cargo inside the vehicle with tape, nylon cord, or lashings. Secure the doors shut if installed.

(e) Ensure the fuel tank is not over 3/4 full. Inspect fuel tank cap, oil filler cap, and battery caps for proper installation.

(f) Engage the vehicle parking brake and put the transmission in neutral.

(g) Ensure the front wheels are pointed straight ahead. Tie down the steering wheel, using the securing device attached under the dashboard.

(h) Tape the windshield in an X formation from corner to corner.

(2) Rigging. Rig the load according to the steps in Figure 2-35.

(3) Hookup. The hookup team stands on top of the shelter. The static wand person discharges the static electricity with the static wand. The forward hookup person places apex fitting 1 onto the forward cargo hook. The aft hookup person places apex fitting 2 onto the aft cargo hook. The hookup team then carefully dismounts the vehicle and remains close to the load as the helicopter removes slack from the sling legs.When successful hookup is assured, the hookup team quickly exits the area underneath the helicopter to the designated rendezvous point.

(4) Derigging. Derigging is the reverse of the preparation and rigging procedures in steps d (1) and d (2).

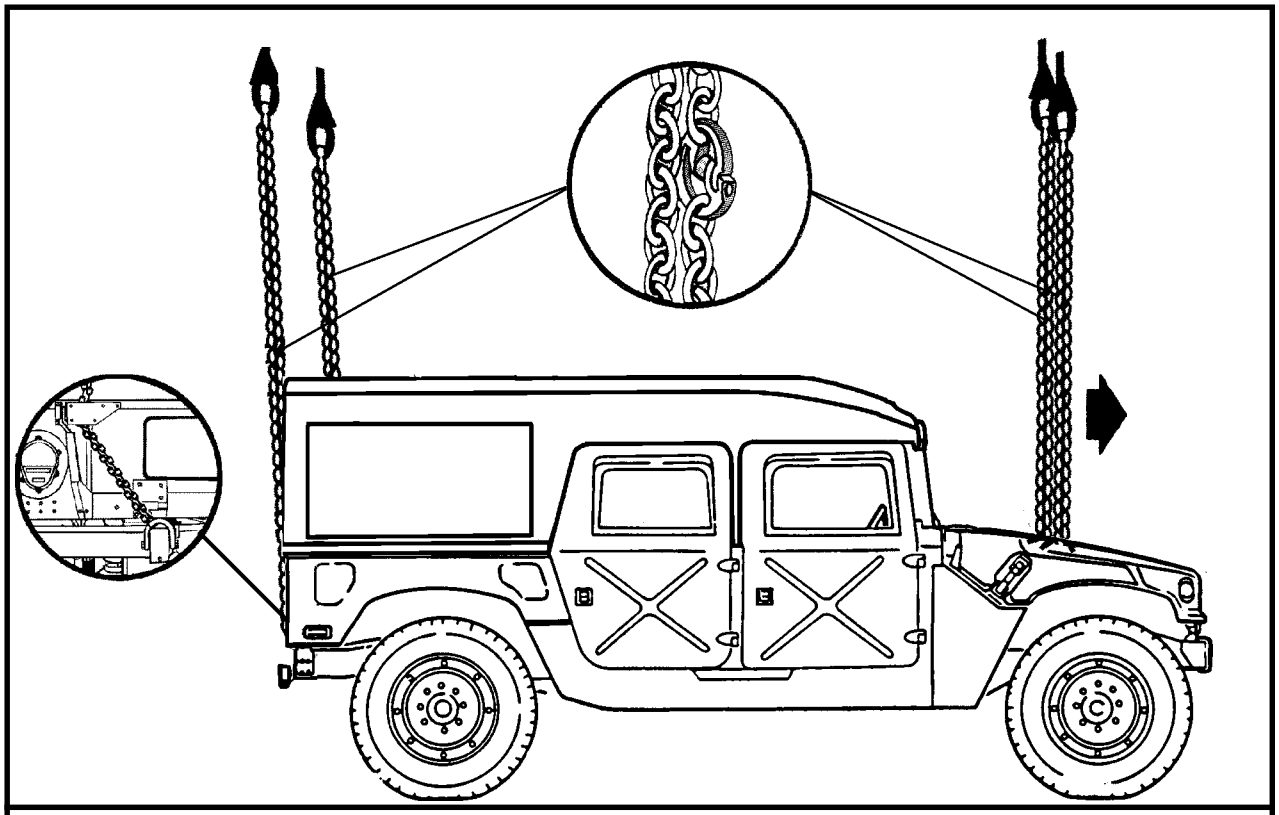

RIGGING STEPS

1. Connect 2 sling legs to apex fitting number 1. Position the apex fitting on top of the shelter.

2. Loop the chain end of the sling legs through their respective lift provisions that protrudes through the hood. Place the correct link from Table 2-36 in the grab hook.

3. Connect 2 sling legs to apex fitting number 2. Position the apex fitting on top of the shelter.

4. Route the chain end of the sling legs through their respective eyelet openings in the upper corner of the tailgate. Loop the chain end through the respective lift provision and back through the tailgate eyelets. Place the correct links from Table 2-36 in the grab hooks.

5. Secure all excess chain with tape or Type III nylon cord.

6. Cluster and tie or tape (breakaway technique) the sling legs in each sling set on top of the vehicle to prevent entanglement during hookup and lift-off.

Figure 2-35. M998 Truck, Cargo, 1 1/4-Ton (HMMWV) With AMTECH Helmet Hardtop

2-38. Dual HMMWV, Side by Side (Shotgun Method), With AMTECH Helmet Hardtop Basic

a. Applicability. The following items in Table 2-37 are certified for the helicopter(s) listed in the following table by the US Army Soldier Systems Center:

Table 2-37. Dual HMMWV, Side by Side (Shotgun Method), With AMTECH Helmet Hardtop Basic

NOMENCLATURE	MAX WEIGHT (POUNDS)	SLING SET	LINK COUNT FRONT/-REAR	TYPE OF AIRCRAFT	RECOMMENDED AIRSPEED (KNOTS)
Truck, 1 1/4-Ton, HMMWV, M998 with Helmet Hardtop, Basic, Models 1551/1551-0/1551-1/1551-3/1551-4/1551-5/1551-6/-1552/1552-0/1552-1/1552-3/1552-4/1552--5/1552-6	7,700 each	10K	Listed in rigging steps	CH-47	130

WARNING
ONLY HMMWVs WITH THE 3/4-INCH FRONT LIFT PROVISIONS ARE CERTIFIED FOR SLING LOADING IN THE SIDE BY SIDE (SHOTGUN METHOD).

WARNING
HMMWVs WITH A MANUFACTURER'S SERIAL NUMBER OF LESS THAN 100000 ARE EQUIPPED WITH THE 5/8-INCH FRONT LIFT PROVISIONS BY THE MANUFACTURER, BUT CAN BE CHANGED TO THE 3/4-INCH FRONT LIFT PROVISIONS BY QUALIFIED MAINTENANCE PERSONNEL. HMMWVs WITH A MANUFACTURER'S SERIAL NUMBER OF 100000 OR GREATER ARE EQUIPPED WITH THE 3/4-INCH FRONT LIFT PROVISIONS BY THE MANUFACTURER. PRIOR TO SLING LOADING HMMWVs IN THE SIDE BY SIDE (SHOTGUN) METHOD, VERIFY THAT THE HMMWVs ARE EQUIPPED WITH 3/4-INCH FRONT LIFT PROVISIONS BY CHECKING THE MANUFACTURER'S SERIAL NUMBER OR MEASURING THE DIAMETER OF THE FRONT LIFT PROVISION. THE HMMWV MANUFACTURER'S SERIAL NUMBER IS LOCATED ON A DATA PLATE ON THE LOWER RIGHT CORNER OF THE DRIVER'S SIDE DOOR OPENING.

b. Materials. The following materials are required to rig this load:

(1) Sling set (10,000-pound capacity) (2 each).

(a) Chain length, part number 38850-00053-101, from a 10,000-pound capacity sling set (8 each).

(b) Coupling link, part number 5779125, from a 10,000-pound sling set (8 each).

(2) Tape, adhesive, pressure-sensitive, 2-inch wide roll.

(3) Cord, nylon, Type III, 550-pound breaking strength.

(4) Webbing, cotton, 1/4-inch, 80-pound breaking strength.

(5) Strap, tiedown, cargo, CGU-1/B (2 each).

c. Personnel. Four persons can prepare and rig this load in 20 minutes.

d. Procedures. The following procedures apply to this load:

(1) Preparation. Prepare the load using the following steps:

(a) Extend the sling leg chains by connecting one additional chain length to each chain on a 10,000-pound capacity sling set with coupling links.

(b) Fold mirrors forward in front of the windshield for added protection and tie together with Type III nylon cord.

(c) Ensure the cargo bed cover is secured to the truck. Secure all equipment inside the shelter with tape, nylon cord, or lashings; close and secure shelter vents and door with nylon cord or tape.

(d) Secure all equipment and cargo inside the vehicle with tape, nylon cord, or lashings. Secure the doors shut if installed.

(e) Ensure the fuel tank is not over 3/4 full. Inspect fuel tank cap, oil filler cap, and battery caps for proper installation.

(f) Secure the vehicle camouflage net (in the bag) to each vehicle. Secure one net to the forward doorpost of one vehicle and the other net to the hard part of the body covering the fuel tank opening of the other vehicle.

(g) Position the vehicles next to each other, as close as possible. Both vehicles must face the same direction.

(h) Engage the vehicle parking brake and put the transmission in neutral.

(i) Ensure the front wheels are pointed straight ahead. Tie down the steering wheel, using the securing device attached under the dashboard.

(j) Tape the windshield in an X formation from corner to corner.

(k) Remove and stow the fuel can holders from the tailgates.

(2) Rigging. Rig the load according to the steps in Figure 2-36.

(3) Hookup. The hookup teams stand on the cargo bed cover and on the hood of the vehicles. The static wand person discharges the static electricity with the static wand. The forward hookup person places apex fitting 1 onto the forward cargo hook. The aft hookup person places apex fitting 2 onto the aft cargo hook. The hookup team then carefully dismounts the vehicle and remains close to the load as the helicopter removes slack from the sling legs. When successful hookup is assured, the hookup team quickly exits the area underneath the helicopter to the designated rendezvous point.

(4) Derigging. Derigging is the reverse of the preparation and rigging procedures in steps d (1) and d (2).

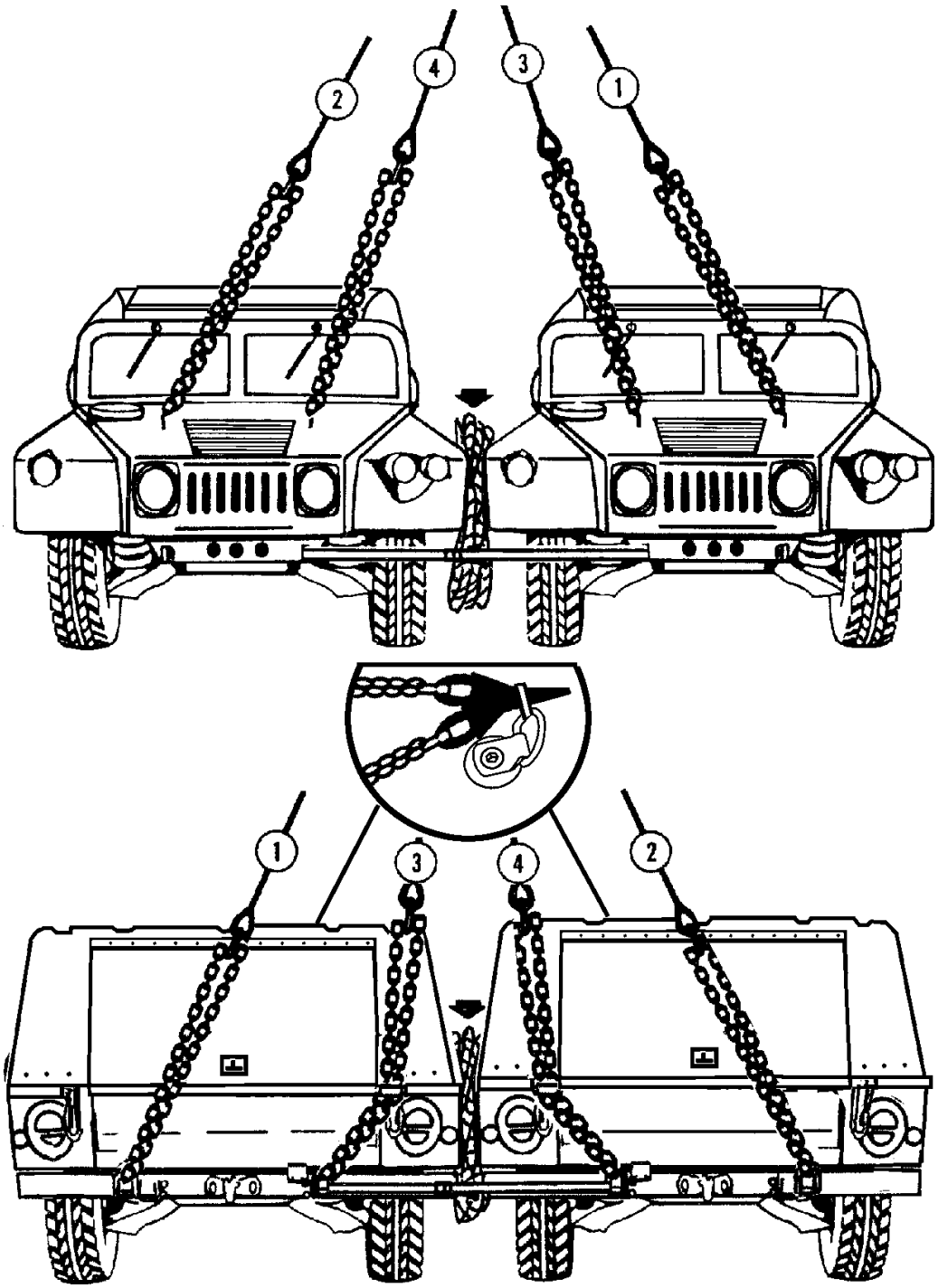

Figure 2-36. Dual HMMWV, Side by Side (Shotgun Method), With AMTECH Helmet Hardtop Basic

RIGGING STEPS

1. Position one sling set on the hood of one of the vehicles.

2. Loop the chain end of the outside sling legs through their respective outside lift provisions that protrude through the hoods of the vehicles. Place link 35 in the grab hooks.

3. Loop the chain end of the inside sling legs through their respective inside lift provisions that protrude through the hoods of the vehicles. Place link 50 in the grab hooks.

4. Position the other sling set on the roof of one of the vehicles.

5. Loop the chain end of the outside sling legs through their respective lift shackle on the outside end of the rear bumper. Place link 8 in the grab hooks.

CAUTION
DO NOT ROUTE THE OUTSIDE SLING LEGS THROUGH THE TAILGATE SLING GUIDES.

6. Route the chain ends of the inside sling legs through their respective inside tailgate guides. Loop the chain ends through their respective lift provisions located on the inside of the rear bumpers and back through the tailgate guides. Place link 7 in the grab hooks.

7. Secure all excess chain with tape or Type III nylon cord.

8. Direct the front sling legs from each vehicle to the inside front tiedown provision on the top of the helmet hardtop. Tie the sling legs to the tiedown provision with Type I, 1/4-inch cotton webbing. Ensure all the slack is removed from the chain.

9. Remove the slack in the rear sling chains. Tie the sling legs from each vehicle to the inside rear tiedown provision on the helmet hardtop with Type I, 1/4-inch cotton webbing.

10. Cluster and tie or tape (breakaway technique) the sling legs in each sling set on top of the vehicle to prevent entanglement during hookup and lift-off.

11. Route a CGU-1/B cargo tiedown strap from the front inside tie down shackle of one vehicle, through the front inside tie down shackle of the other vehicle and connect the hooks together. Tighten the strap.

12. Route a CGU-1/B cargo tiedown strap from the rear inside lift shackle of one vehicle, through the rear inside lift shackle of the other vehicle and connect the hooks together. Ensure the strap is positioned below the sling leg chains. Tighten the strap.

Figure 2-36. Dual HMMWV, Side by Side (Shotgun Method), With AMTECH Helmet Hardtop Basic (continued)

2-39. Helmet Hardtop (AMTECH) Cargo Bed Cover on M1097A2 HMMWV

a. Applicability. The following item in Table 2-36 is certified for the helicopter(s) listed in the following table by the US Army Soldier Systems Center:

Table 2-38. Helmet Hardtop (AMTECH) Cargo Bed Cover on M1097A2 HMMWV

NOMENCLATURE	MAX WEIGHT (POUNDS)	SLING SET	LINK COUNT FRONT/-REAR	TYPE OF AIRCRAFT	RECOMMENDED AIRSPEED (KNOTS)
Measurement and Signature Intelligence (MASINT)	10,300	25K	36/10	CH-47	90

b. Materials. The following materials are required to rig this load:

(1) Sling set (25,000-pound capacity) with one additional apex fitting.

(a) Chain length, part number 38850-00053-102, from a 25,000-pound capacity sling set (4 each).

(b) Coupling link, part number 664241, from a 25,000-pound sling set (4 each).

(2) Tape, adhesive, pressure-sensitive, 2-inch wide roll.

(3) Cord, nylon, Type III, 550-pound breaking strength.

(4) Webbing, cotton, 1/4-inch, 80-pound breaking strength.

c. Personnel. Two persons can prepare and rig this load in 20 minutes.

d. Procedures. The following procedures apply to this load:

(1) Preparation. Prepare the load using the following steps:

(a) Extend the sling leg chains by connecting one additional chain length to each chain on a 25,000-pound capacity sling set with coupling links.

(b) Fold mirrors forward in front of the windshield for added protection and tie together with Type III nylon cord.

(c) Ensure the cargo bed cover is secured to the truck. Secure all equipment inside the shelter with tape, nylon cord, or lashings; close and secure shelter vents and door with nylon cord or tape.

(d) Secure all equipment and cargo inside the vehicle with tape, nylon cord, or lashings. Secure the doors shut if installed.

(e) Ensure the fuel tank is not over 3/4 full. Inspect fuel tank cap, oil filler cap, and battery caps for proper installation.

(f) Engage the vehicle parking brake and put the transmission in neutral.

(g) Ensure the front wheels are pointed straight ahead. Tie down the steering wheel, using the securing device attached under the dashboard.

(h) Tape the windshield in an X formation from corner to corner.

(2) Rigging. Rig the load according to the steps in Figure 2-35.

(3) Hookup. The hookup team stands on top of the shelter. The static wand person discharges the static electricity with the static wand. The forward hookup person

places apex fitting 1 onto the forward cargo hook. The aft hookup person places apex fitting 2 onto the aft cargo hook. The hookup team then carefully dismounts the vehicle and remains close to the load as the helicopter removes slack from the sling legs. When successful hookup is assured, the hookup team quickly exits the area underneath the helicopter to the designated rendezvous point.

(4) Derigging. Derigging is the reverse of the preparation and rigging procedures in steps d (1) and d (2).

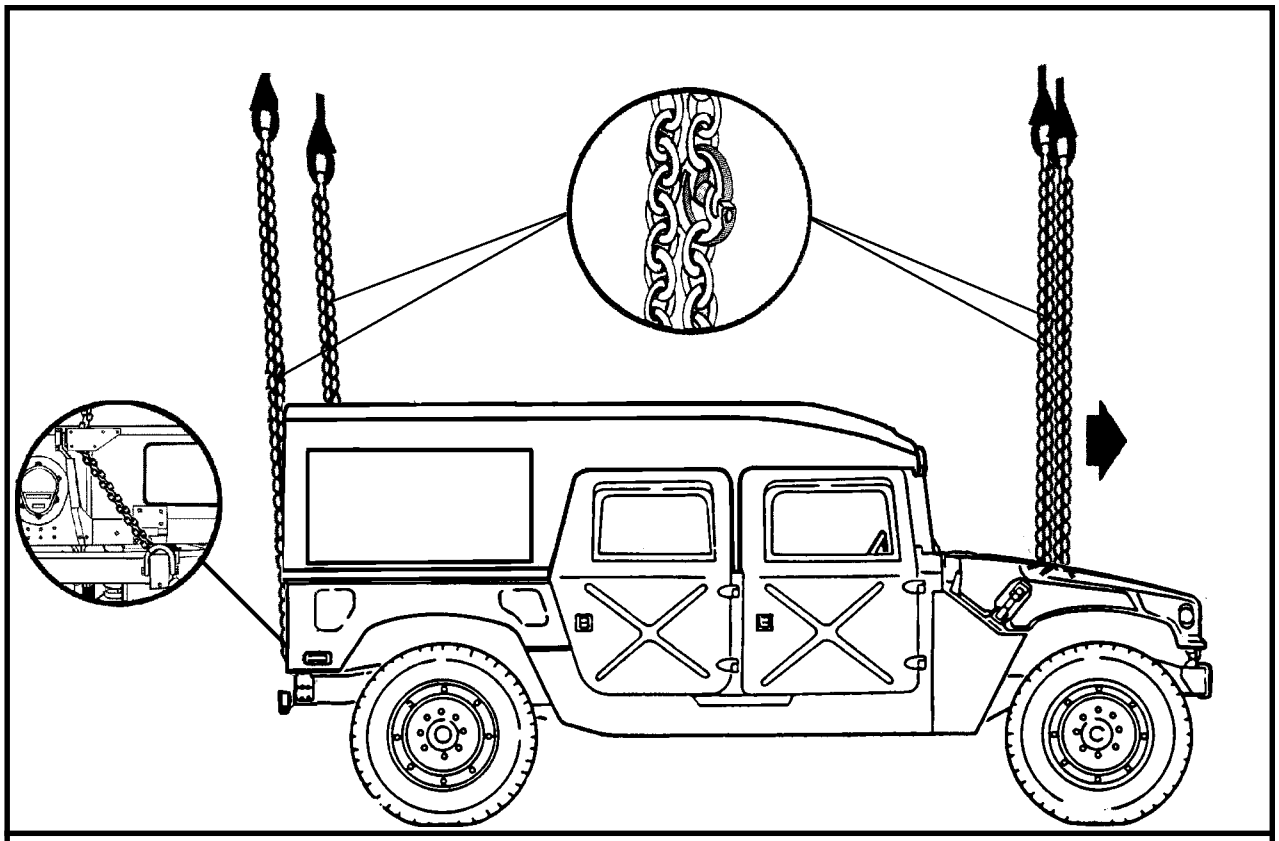

RIGGING STEPS

1. Connect 2 sling legs to apex fitting number 1. Position the apex fitting on top of the shelter.

2. Loop the chain end of the sling legs through their respective lift provisions that protrudes through the hood. Place the correct link from Table 2-36 in the grab hook.

3. Connect 2 sling legs to apex fitting number 2. Position the apex fitting on top of the shelter.

4. Route the chain end of the sling legs through their respective eyelet openings in the upper corner of the tailgate. Loop the chain end through the respective lift provision and back through the tailgate eyelets. Place the correct links from Table 2-36 in the grab hooks.

5. Secure all excess chain with tape or Type III nylon cord.

6. Cluster and tie or tape (breakaway technique) the sling legs in each sling set on top of the vehicle to prevent entanglement during hookup and lift-off.

Figure 2-35. Helmet Hardtop (Amtech Corp) Cargo Bed Cover on M1097A2 HMMWV

CHAPTER 3

CERTIFIED DUAL-POINT RIGGING PROCEDURES FOR TRAILERS

3-1. INTRODUCTION

This chapter contains rigging procedures for dual-point trailer loads that have been certified for sling load. Each rigging procedure is found in a paragraph that includes a description of the load, materials required for rigging, and steps to complete the procedure. An applicability paragraph is also a part of each paragraph and identifies the certified loads. The certified dual-point rigging procedures for trailers are in this section. Paragraphs 3-2 through 3-20 give detailed instructions for rigging loads.

NOTE: Reach Pendants may be used on dual point loads. Place a Reach Pendant on each apex fitting. A static discharge person is not required when using a Reach Pendant.

3-2. M101A2 3/4-Ton Trailer

a. Applicability. The following items in Table 3-1 are certified for the helicopter(s) listed in the following table by the US Army Soldier Systems Center:

Table 3-1. M101A2 3/4-Ton Trailer

NOMENCLATURE	CURB WEIGHT (POUNDS)	SLING SET	LINK COUNT FRONT/ REAR	TYPE OF AIRCRAFT	RECOMMENDED AIRSPEED (KNOTS)
M101A2 with Accompanying Load	3,000	10K	3/20	CH-47	100
Command Version 1 Trailer	1,958	10K	3/20	CH-47	100
Command Version 2 Trailer	1,981	10K	3/20	CH-47	100
Len Cable Trailer	2,796	10K	3/20	CH-47	100
NC Support Trailer	2,643	10K	3/20	CH-47	100
Maintenance Trailer #2	1,430	10K	3/20	CH-47	100
Battalion Spares Trailer #1	1,594	10K	3/20	CH-47	100
Battalion Spares Trailer #2	2,206	10K	3/20	CH-47	100
Downsized Direct Support Section Trailer	2,700	10K	3/20	CH-47	100

WARNING

THE M101A2 3/4-TON TRAILER MUST HAVE A GROSS WEIGHT OF 1,575 POUNDS OR MORE. ADD ADDITIONAL WEIGHT OR CARGO TO ANY TRAILER WHICH WEIGHS LESS THAN 1,575 POUNDS. PLACE THE WEIGHT NEAR THE CENTER OF THE TRAILER.

WARNING

MAXIMUM WEIGHT DURING SLING LOAD OPERATIONS FOR ANY VARIANT OF THE M101A2 3/4-TON TRAILER IS 3,000 POUNDS.

b. Materials. The following materials are required to rig this load:

(1) Sling set (10,000-pound capacity) with one additional apex fitting.

(2) Tape, adhesive, pressure-sensitive, 2-inch wide roll.

(3) Cord, nylon, Type III.

(4) Webbing, cotton, 1/4-inch.

(5) Tie down, CGU-1B or dacron lashing and load binder.

c. Personnel. Two persons can prepare and rig this load in 15 minutes.

d. Procedures. The following procedures apply to this load:

(1) Preparation. Prepare the load using the following steps:

(a) Fasten the tailgate in the open position with the chains on each side hooked through the keeper.

(b) Remove the front rack and place it in the bed of the trailer. Place the accompanying load on top of the front rack. Secure the accompanying load to the trailer using tie-down straps. Route the straps diagonally across the load from the tailgate hinge to the front lifting shackles.

(c) Tape or tie the light cable firmly to the top of the drawbar.

(d) Ensure the parking brake is set.

(2) Rigging. Rig the load according to the steps in Figure 3-1.

(3) Hookup. The hookup teams stand in the bed of the trailer. The static wand person discharges the static electricity with the static wand. The forward hookup person places apex fitting 1 onto the forward cargo hook. The aft hookup person places apex fitting 2 onto the aft cargo hook. The hookup team then carefully dismounts the vehicle and remains close to the load as the helicopter removes slack from the sling legs. When successful hookup is assured, the hookup team quickly exits the area underneath the helicopter to the designated rendezvous point.

(4) Derigging. Derigging is the reverse of the preparation and rigging procedures in steps d (1) and d (2).

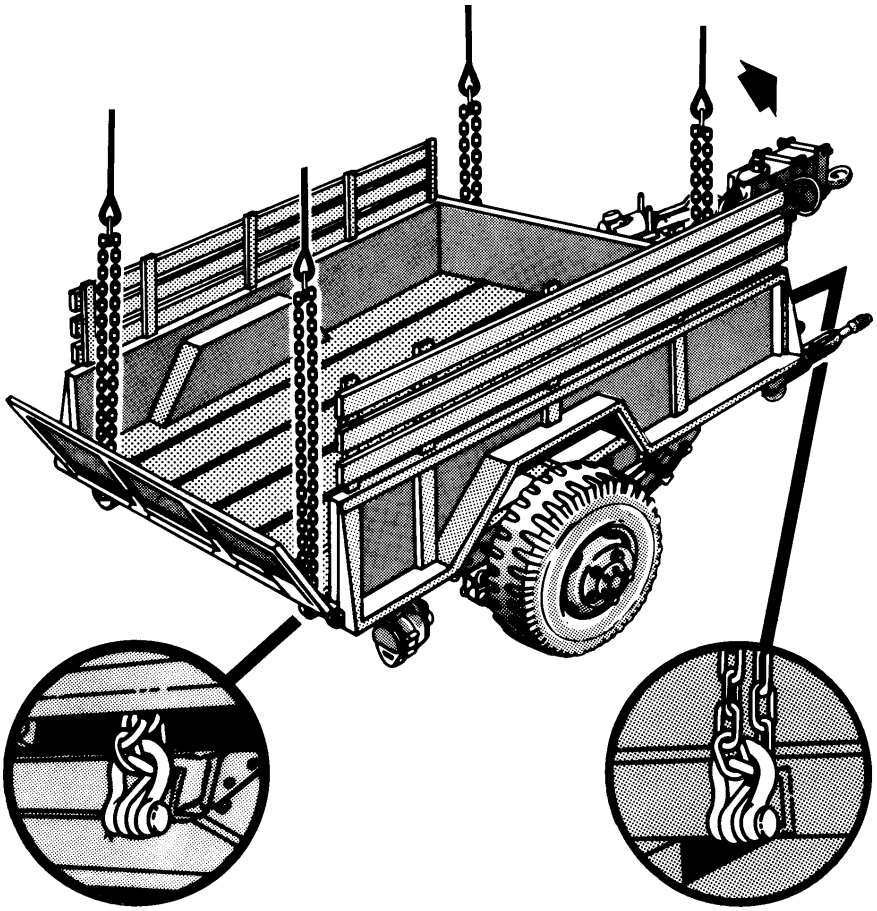

RIGGING STEPS

1. Connect 2 sling legs to apex fitting number 1. Position the apex fitting on the drawbar.

2. Loop the chain end of the sling legs through their respective lift provisions located on the front of the trailer. Place the correct link from Table 3-1 in the grab hook.

3. Connect 2 sling legs to apex fitting number 2. Route the two sling legs through the opening between the tailgate and the trailer bed. Route each chain on the inboard side of the tailgate hinge.

4. Loop the chain end of the sling legs through their respective lift provisions. Place the correct link from Table 3-1 in the grab hook. Remove the slack from each rear sling leg and tape or tie (breakaway technique) each sling leg to the side rack.

5. Secure all excess chain with tape or Type III nylon cord.

6. Cluster and tie or tape (breakaway technique) the sling legs in each sling set together to prevent entanglement during hookup and lift-off.

Figure 3-1. M101A2 3/4-Ton Trailer

3-3. M1048 Trailer with Tracked Suspension System (TSS)

a. Applicability. The following item in Table 3-2 is certified for the helicopter(s) listed in the following table by the US Army Soldier Systems Center:

Table 3-2. M1048 Trailer (TSS)

NOMENCLATURE	MAX WEIGHT (POUNDS)	SLING SET	LINK COUNT FRONT/ REAR	TYPE OF AIRCRAFT	RECOMMENDED AIRSPEED (KNOTS)
M1048 Trailer (TSS)	7,880	10K	16/3	CH-47	140

b. Materials. The following materials are required to rig this load:

(1) Sling set (10,000-pound capacity) with one additional apex fitting.

(2) Tape, adhesive, pressure-sensitive, 2-inch wide roll.

(3) Cord, nylon, Type III.

(4) Webbing, cotton, 1/4-inch.

c. Personnel. Two persons can prepare and rig this load in 10 minutes.

d. Procedures. The following procedures apply to this load:

(1) Preparation. Prepare the load using the following steps:

(a) Secure all loose chains, hoses, and cables to the trailer drawbar with Type III nylon cord.

(b) Secure any lids, caps, or loose items with tape or Type III nylon cord.

(c) Tape or tie the light cable firmly to the top of the drawbar.

(d) Place the front leveling jacks in the down position. Ensure the base of the leveling jacks are not extended. Stow the jack handles and secure with Type III nylon cord. Secure the rear leveling jacks in the up position.

(e) Ensure the parking brake is set.

(2) Rigging. Rig the load according to the steps in Figure 3-2.

(3) Hookup. The hookup teams stand in the bed of the trailer. The static wand person discharges the static electricity with the static wand. The forward hookup person places apex fitting 1 onto the forward cargo hook. The aft hookup person places apex fitting 2 onto the aft cargo hook. The hookup team then carefully dismounts the vehicle and remains close to the load as the helicopter removes slack from the sling legs. When successful hookup is assured, the hookup team quickly exits the area underneath the helicopter to the designated rendezvous point.

(4) Derigging. Derigging is the reverse of the preparation and rigging procedures in steps d (1) and d (2).

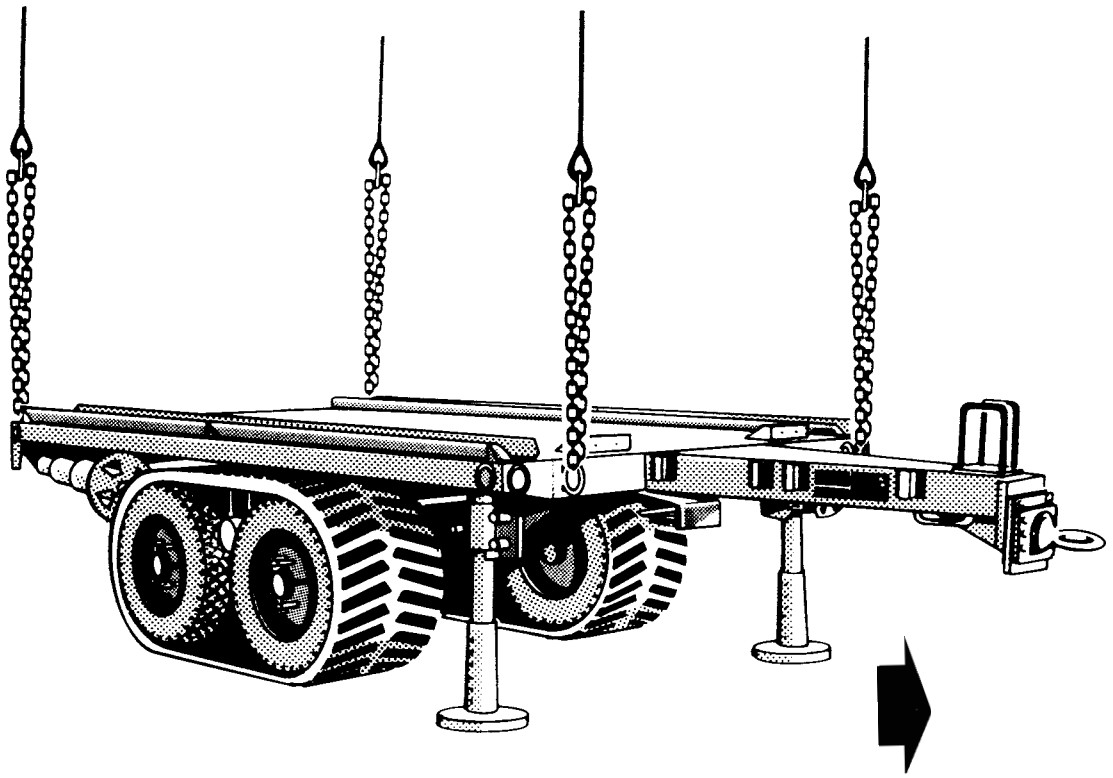

RIGGING STEPS

1. Connect 2 sling legs to apex fitting number 1. Position the apex fitting on the front (lunette end) of the trailer.

2. Loop the chain end of the sling legs through their respective lift provisions located on the front of the trailer. Place the correct link from Table 3-2 in the grab hook.

3. Connect 2 sling legs to apex fitting number 2. Position the apex fitting on the rear of the trailer.

4. Loop the chain end of the sling legs through their respective lift provisions. Place the correct link from Table 3-2 in the grab hook.

5. Secure all excess chain with tape or Type III nylon cord.

6. Cluster and tie or tape (breakaway technique) the sling legs in each sling set together to prevent entanglement during hookup and lift-off.

Figure 3-2. M1048 Trailer (TSS)

3-4. M989 Heavy-Expanded Mobility Ammunition Trailer (HEMAT)

a. Applicability. The following item in Table 3-3 is certified for the helicopter(s) listed in the following table by the US Army Soldier Systems Center:

Table 3-3. M989 HEMAT

NOMENCLATURE	MAX WEIGHT (POUNDS)	SLING SET	LINK COUNT FRONT/ REAR	TYPE OF AIRCRAFT	RECOMMENDED AIRSPEED (KNOTS)
M989 HEMAT (Empty)	7,640	10K	40/4	CH-47	130

NOTE: This load is only certified for sling loading at its empty weight.

b. Materials. The following materials are required to rig this load:

(1) Sling set (10,000-pound capacity) with one additional apex fitting.

(2) Tape, adhesive, pressure-sensitive, 2-inch wide roll.

(3) Cord, nylon, Type III.

(4) Webbing, cotton, 1/4-inch.

(5) Tie-down CGU-1/B (8 each).

c. Personnel. Two persons can prepare and rig this load in 15 minutes.

d. Procedures. The following procedures apply to this load:

(1) Preparation. Prepare the load using the following steps:

(a) At each corner of the trailer, slide the lifting provisions out until they are completely extended. Do not lift the trailer unless the provisions are fully extended and secured in position.

(b) Remove the side and end panels. Place two panels side by side on the trailer so that the panel ends are approximately 10 inches from the front of the trailer. Make sure the panels are positioned lengthwise on the trailer. Place the remaining panels on top of the respective panels on the trailer.

(c) Secure the panels on the trailer with the tie-down straps. Attach the hook end of one tie-down strap to a tie-down ring on the trailer bed beside the panels approximately 1 foot from the end of the panels. Connect and tighten the ratchet end to a tie-down ring on the other side of the panels. Secure loose end of strap. Repeat with a second tie-down strap at the other end of the panels.

(d) To secure the panels lengthwise, route the hook end of one tie-down strap around the vertical metal stiffeners on the top panel of the stack of panels on the left side of the trailer. Attach the hook end to a tie-down ring on the front end of the trailer bed. Connect and tighten the ratchet end to a tie-down ring on the other end of the stack of panels. Secure loose end of strap. Repeat with a second tie-down strap on the other stack of panels.

(e) Tape or tie the intervehicular cable, hoses, and safety chains firmly to the top of the drawbar with tape or Type III nylon cord.

(f) Engage the parking brake.

(2) Rigging. Rig the load according to the steps in Figure 3-3.

(3) Hookup. The hookup teams stand in the bed of the trailer. The static wand person discharges the static electricity with the static wand. The forward hookup person places apex fitting 1 onto the forward cargo hook. The aft hookup person places apex fitting 2 onto the aft cargo hook. The hookup team then carefully dismounts the vehicle and remains close to the load as the helicopter

removes slack from the sling legs. When successful hookup is assured, the hookup team quickly exits the area underneath the helicopter to the designated rendezvous point.

(4) Derigging. Derigging is the reverse of the preparation and rigging procedures in steps d (1) and d (2).

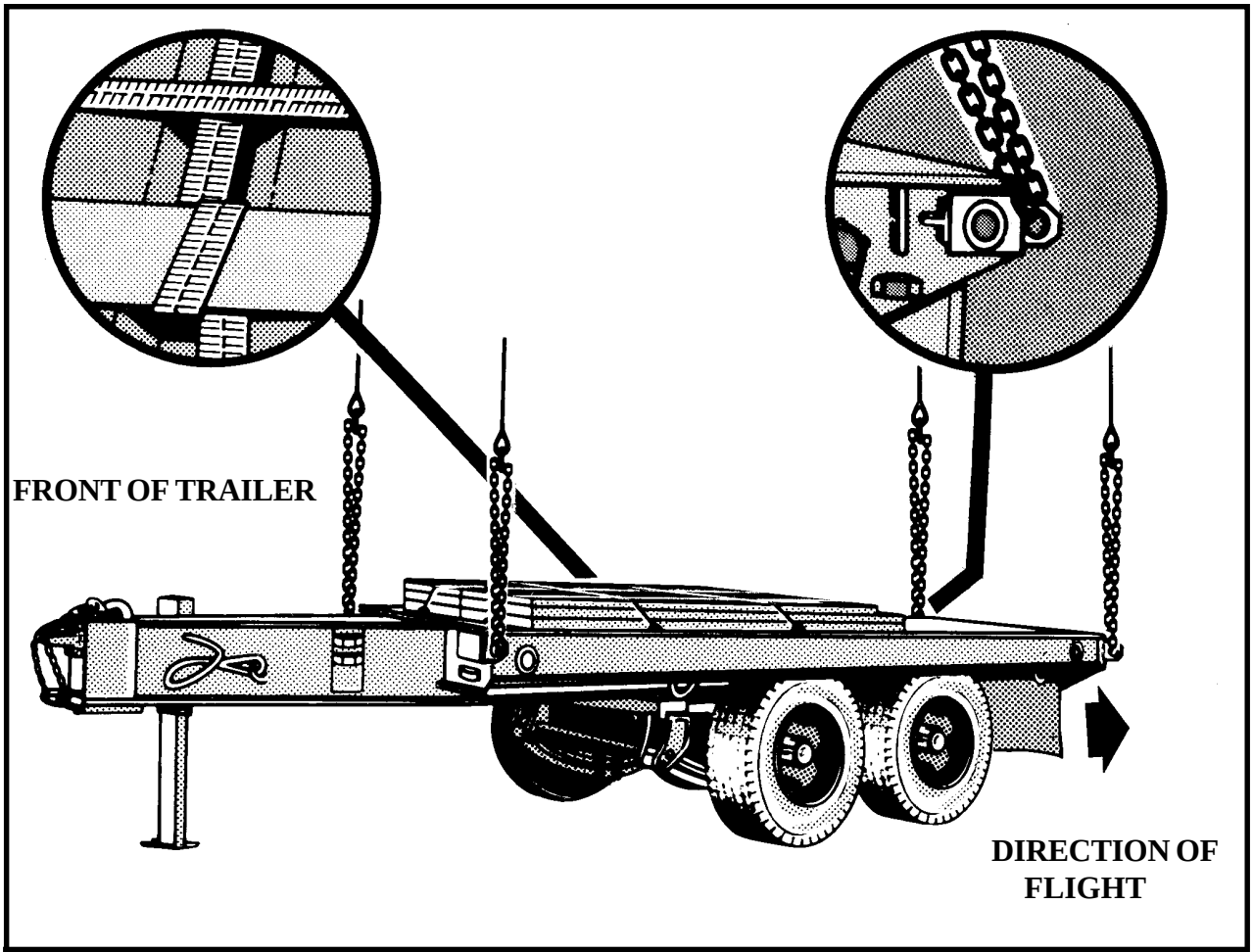

RIGGING STEPS

1. Connect 2 sling legs to apex fitting number 1. Position the apex fitting on the front (lunette end) of the trailer.

2. Loop the chain end of the sling legs through their respective lift provisions located on the front of the trailer. Place the correct link from Table 3-3 in the grab hook.

3. Connect 2 sling legs to apex fitting number 2. Position the apex fitting on the rear of the trailer.

4. Loop the chain end of the sling legs through their respective lift provisions. Place the correct link from Table 3-3 in the grab hook.

5. Secure all excess chain with tape or Type III nylon cord.

6. Cluster and tie or tape (breakaway technique) the sling legs in each sling set together to prevent entanglement during hookup and lift-off.

Figure 3-3. M989 HEMAT

3-5. M989A1 Heavy-Expanded Mobility Ammunition Trailer (HEMAT II)

a. Applicability. The following item in Table 3-4 is certified for the helicopter(s) listed in the following table by the US Army Soldier Systems Center:

Table 3-4. M989A1 HEMAT II

NOMENCLATURE	MAX WEIGHT (POUNDS)	SLING SET	LINK COUNT FRONT/ REAR	TYPE OF AIRCRAFT	RECOMMENDED AIRSPEED (KNOTS)
M989A1 HEMAT II	10,650	25K	15/3	CH-47	130

CAUTION

The following rigging procedures are for the M989A1 HEMAT II only. Do not use these procedures when rigging the M989 HEMAT.

b. Materials. The following materials are required to rig this load:

(1) Sling set (25,000-pound capacity) with one additional apex fitting.

(2) Tape, adhesive, pressure-sensitive, 2-inch wide roll.

(3) Cord, nylon, Type III, 550-pound breaking strength.

(4) Webbing, cotton, 1/4-inch, 80-pound breaking strength.

(5) Tie-down CGU-1/B (as required).

c. Personnel. Two persons can prepare and rig this load in 10 minutes.

d. Procedures. The following procedures apply to this load:

(1) Preparation. Prepare the load using the following steps:

(a) Inspect the lift provisions at the four upper corners of the cargo bed.

(b) Raise the trailer tongue and secure it in the up position with a CGU-1/B.

(c) Secure the brake hose, safety hose, intravehicular cable(s), and safety chains to the trailer and tongue with tape or Type III nylon cord.

(d) Engage the steering lockout pin.

(e) Secure the side panels to the cargo deck with CGU-1Bs.

(2) Rigging. Rig the load according to the steps in Figure 3-4.

(3) Hookup. The hookup teams stand on top of the M989A1. The static wand person discharges the static electricity with the static wand. The forward hookup person places apex fitting 1 onto the forward cargo hook. The aft hookup person places apex fitting 2 onto the aft cargo hook. The hookup team then carefully dismounts the vehicle and remains close to the load as the helicopter removes slack from the sling legs. When successful hookup is assured, the hookup team quickly exits the area underneath the helicopter to the designated rendezvous point.

CAUTION

Brief the helicopter crew to relax sling leg tension and hover to the side of the load when releasing the apex fitting to prevent damage to the panels on top of the trailer.

(4) Derigging. Derigging is the reverse of the preparation and rigging procedures in steps d (1) and d (2).

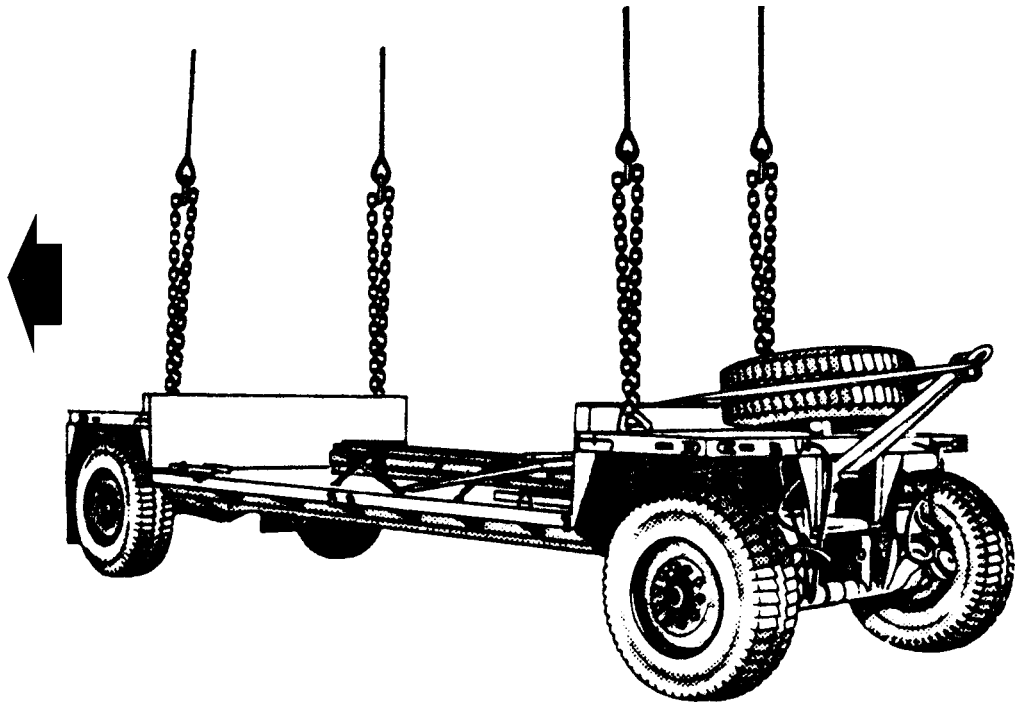

RIGGING STEPS

1. Connect 2 sling legs to apex fitting number 1. Position the apex fitting on top of the front deck of the trailer.

2. Loop the chain end of the sling legs through their respective lift provisions located on the front (tongue end) of the trailer. Place the correct link from Table 3-4 in the grab hook.

3. Connect 2 sling legs to apex fitting number 2. Position the apex fitting on the top of the rear deck of the trailer.

4. Loop the chain end of the sling legs through their respective lift provisions. Place the correct link from Table 3-4 in the grab hook.

5. Secure all excess chain with tape or Type III nylon cord.

6. Cluster and tie or tape (breakaway technique) the sling legs in each sling set together to prevent entanglement during hookup and lift-off.

Figure 3-4. M989A1 HEMAT II

3-6. Mk14 Trailer, Container Hauler

a. Applicability. The following item in Table 3-5 is certified for the helicopter(s) listed in the following table by the US Army Soldier Systems Center:

Table 3-5. Mk14 Trailer, Container Hauler

NOMENCLATURE	MAX WEIGHT (POUNDS)	SLING SET	LINK COUNT FRONT/ REAR	TYPE OF AIRCRAFT	RECOMMENDED AIRSPEED (KNOTS)
Mk 14 Trailer, Container Hauler	16,000	40K	3/15	CH-53	120

b. Materials. The following materials are required to rig this load:

(1) Sling set (40,000-pound capacity) with one additional apex fitting.

(2) Tape, adhesive, pressure-sensitive, 2-inch wide roll.

(3) Cord, nylon, Type III, 550-pound breaking strength.

(4) Webbing, cotton, 1/4-inch, 80-pound breaking strength.

c. Personnel. Two persons can prepare and rig this load in 15 minutes.

d. Procedures. The following procedures apply to this load:

(1) Preparation. Prepare the load using the following steps:

(a) Disengage the Mk14 from the Mk48 prime mover according to the operator's manual.

(b) Secure all hoses with tape or Type III nylon cord.

(c) Tape all lights, reflectors, and glass fixtures.

(d) Ensure all tool compartment doors are closed and secured.

(e) Remove the safety retainer pins from the lifting eyelets located under the doors in the bed of the trailer. Unscrew the lifting eyelets from their stored position and reinsert the lifting eyelets so that the eyelet portion is accessible from the bed of the trailer through the access doors. Screw the lifting eyelets all the way in and back out one full turn. Reinsert the safety retainer pins to prevent the lifting eyelets from backing out in flight.

(2) Rigging. Rig the load according to the steps in Figure 3-5.

(3) Hookup. The hookup teams stand on the bed of the trailer. The static wand person discharges the static electricity with the static wand. The forward hookup person places apex fitting 1 onto the forward cargo hook. The aft hookup person places apex fitting 2 onto the aft cargo hook. The hookup team then carefully dismounts the vehicle and remains close to the load as the helicopter removes slack from the sling legs. When successful hookup is assured, the hookup team quickly exits the area underneath the helicopter to the designated rendezvous point.

(4) Derigging. Derigging is the reverse of the preparation and rigging procedures in steps d (1) and d (2).

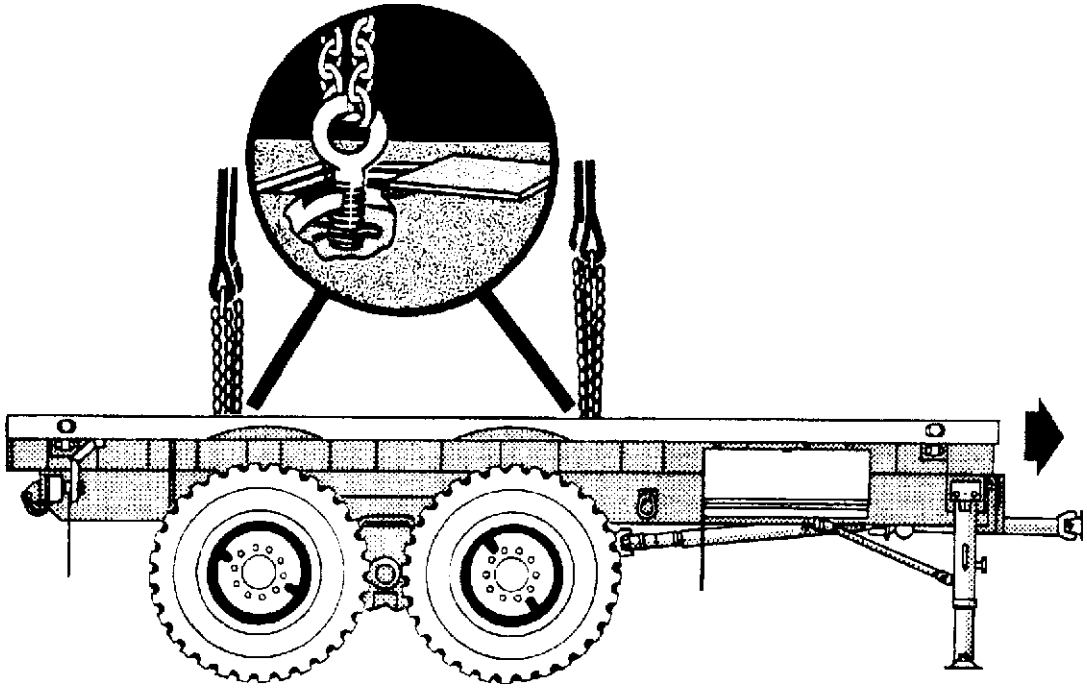

RIGGING STEPS

1. Connect 2 sling legs to apex fitting number 1. Position the apex fitting on top of the forward end of the trailer.

2. Loop the chain end of the sling legs through their respective lift provisions located in the bed of the trailer. Place the correct link from Table 3-5 in the grab hook.

3. Connect 2 sling legs to apex fitting number 2. Position the apex fitting on top of the aft end of the trailer.

4. Loop the chain end of the sling legs through their respective lift provisions in the bed of the trailer. Place the correct link from Table 3-5 in the grab hook.

5. Secure all excess chain with tape or Type III nylon cord.

6. Cluster and tie or tape (breakaway technique) the sling legs in each sling set together to prevent entanglement during hookup and lift-off.

Figure 3-5. Mk14 Trailer, Container Hauler

3-7. Mk15 Trailer, Wrecker/Recovery

a. Applicability. The following item in Table 3-6 is certified for the helicopter(s) listed in the following table by the US Army Soldier Systems Center:

Table 3-6. Mk15 Trailer, Wrecker/Recovery

NOMENCLATURE	MAX WEIGHT (POUNDS)	SLING SET	LINK COUNT FRONT/ REAR	TYPE OF AIRCRAFT	RECOMMENDED AIRSPEED (KNOTS)
Mk15 Trailer, Wrecker/Recovery	26,000	40K	3/10	CH-53	120

b. Materials. The following materials are required to rig this load:

(1) Sling set (40,000-pound capacity) with one additional apex fitting.

(2) Tape, adhesive, pressure-sensitive, 2-inch wide roll.

(3) Cord, nylon, Type III, 550-pound breaking strength.

(4) Webbing, cotton, 1/4-inch, 80-pound breaking strength.

(5) Tie-down strap, cargo, CGU-1/B, as required.

c. Personnel. Two persons can prepare and rig this load in 30 minutes.

d. Procedures. The following procedures apply to this load:

(1) Preparation. Prepare the load using the following steps:

(a) Disengage the Mk15 from the Mk48 prime mover according to the operator's manual.

(b) Remove the A-frame from the rear of the trailer. Stow in the trailer bed and secure with the CGU-1/B tie-down strap.

(c) Secure all hoses with tape or Type III nylon cord.

(d) Tape all lights, reflectors, and glass fixtures.

(e) Ensure all tool compartment doors are closed and secured.

(f) Remove the safety retainer pins from the lifting eyelets located under the doors in the bed of the trailer. Unscrew the lifting eyelets from their stored position and reinsert the lifting eyelets so that the eyelet portion is accessible from the bed of the trailer through the access doors. Screw the lifting eyelets all the way in and back out one full turn. Reinsert the safety retainer pins to prevent the lifting eyelets from backing out in flight.

(2) Rigging. Rig the load according to the steps in Figure 3-6.

(3) Hookup. The hookup teams stand on the bed of the trailer. The static wand person discharges the static electricity with the static wand. The forward hookup person places apex fitting 1 onto the forward cargo hook. The aft hookup person places apex fitting 2 onto the aft cargo hook. The hookup team then carefully dismounts the vehicle and remains close to the load as the helicopter removes slack from the sling legs. When successful hookup is assured, the hookup team quickly exits the area underneath the helicopter to the designated rendezvous point.

(4) Derigging. Derigging is the reverse of the preparation and rigging procedures in steps d (1) and d (2).

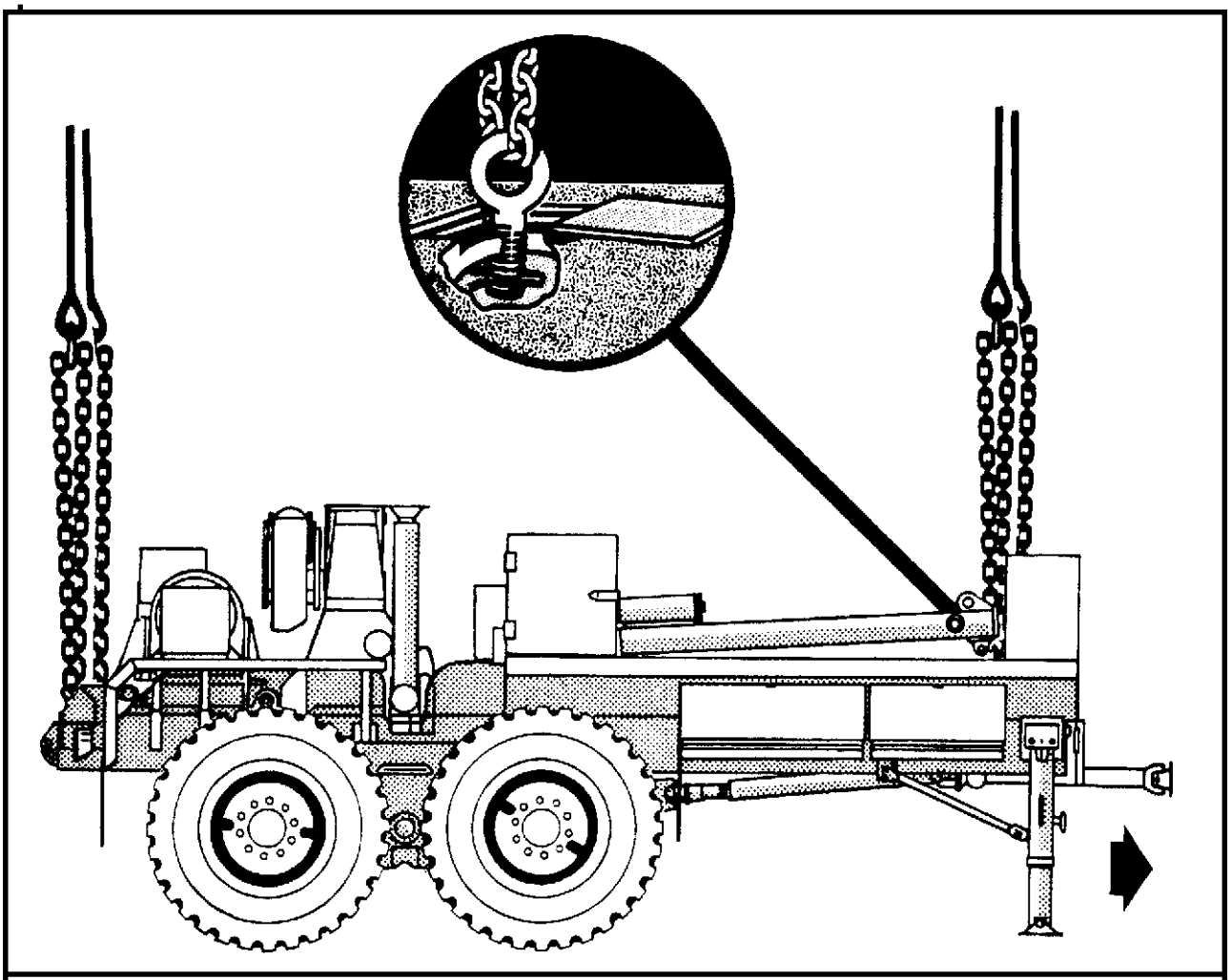

RIGGING STEPS

1. Connect 2 sling legs to apex fitting number 1. Position the apex fitting on top of the trailer bed behind the stowage compartment.

2. Loop the chain end of the sling legs through their respective lift provisions located in the bed behind the stowage compartment. Place the correct link from Table 3-6 in the grab hook.

3. Connect 2 sling legs to apex fitting number 2. Position the apex fitting behind the trailer.

4. Loop the chain end of the sling legs through their respective lift provisions located on the rear of the trailer on each side of the towing pintle hook. Place the correct link from Table 3-6 in the grab hook.

5. Secure all excess chain with tape or Type III nylon cord.

6. Cluster and tie or tape (breakaway technique) the sling legs in each sling set together to prevent entanglement during hookup and lift-off.

Figure 3-6. Mk15 Trailer, Wrecker/Recovery

3-8. Mk16 Trailer, Fifth-Wheel Adapter

a. Applicability. The following item in Table 3-7 is certified for the helicopter(s) listed in the following table by the US Army Soldier Systems Center:

Table 3-7. Mk16 Trailer, Fifth-Wheel Adapter

NOMENCLATURE	MAX WEIGHT (POUNDS)	SLING SET	LINK COUNT FRONT/ REAR	TYPE OF AIRCRAFT	RECOMMENDED AIRSPEED (KNOTS)
Mk 16 Trailer, Fifth -Wheel Adapter	16,000	40K	3/3	CH-53	120

b. Materials. The following materials are required to rig this load:

(1) Sling set (40,000-pound capacity) with one additional apex fitting.

(2) Tape, adhesive, pressure-sensitive, 2-inch wide roll.

(3) Cord, nylon, Type III, 550-pound breaking strength.

(4) Webbing, cotton, 1/4-inch, 80-pound breaking strength.

c. Personnel. Two persons can prepare and rig this load in 30 minutes.

d. Procedures. The following procedures apply to this load:

(1) Preparation. Prepare the load using the following steps:

(a) Disengage the Mk16 from the Mk48 prime mover according to the operator's manual.

(b) Secure all hoses with tape or Type III nylon cord.

(c) Tape all lights, reflectors, and glass fixtures.

(d) Ensure all tool compartment doors are closed and secured.

(e) Remove the safety retainer pins from the lifting eyelets located under the doors in the bed of the trailer. Unscrew the lifting eyelets from their stored position and reinsert the lifting eyelets so that the eyelet portion is accessible from the bed of the trailer through the access doors. Screw the lifting eyelets all the way in and back out one full turn. Reinsert the safety retainer pins to prevent the lifting eyelets from backing out in flight.

(2) Rigging. Rig the load according to the steps in Figure 3-7.

(3) Hookup. The hookup teams stand on the bed of the trailer. The static wand person discharges the static electricity with the static wand. The forward hookup person places apex fitting 1 onto the forward cargo hook. The aft hookup person places apex fitting 2 onto the aft cargo hook. The hookup team then carefully dismounts the vehicle and remains close to the load as the helicopter removes slack from the sling legs. When successful hookup is assured, the hookup team quickly exits the area underneath the helicopter to the designated rendezvous point.

(4) Derigging. Derigging is the reverse of the preparation and rigging procedures in steps d (1) and d (2).

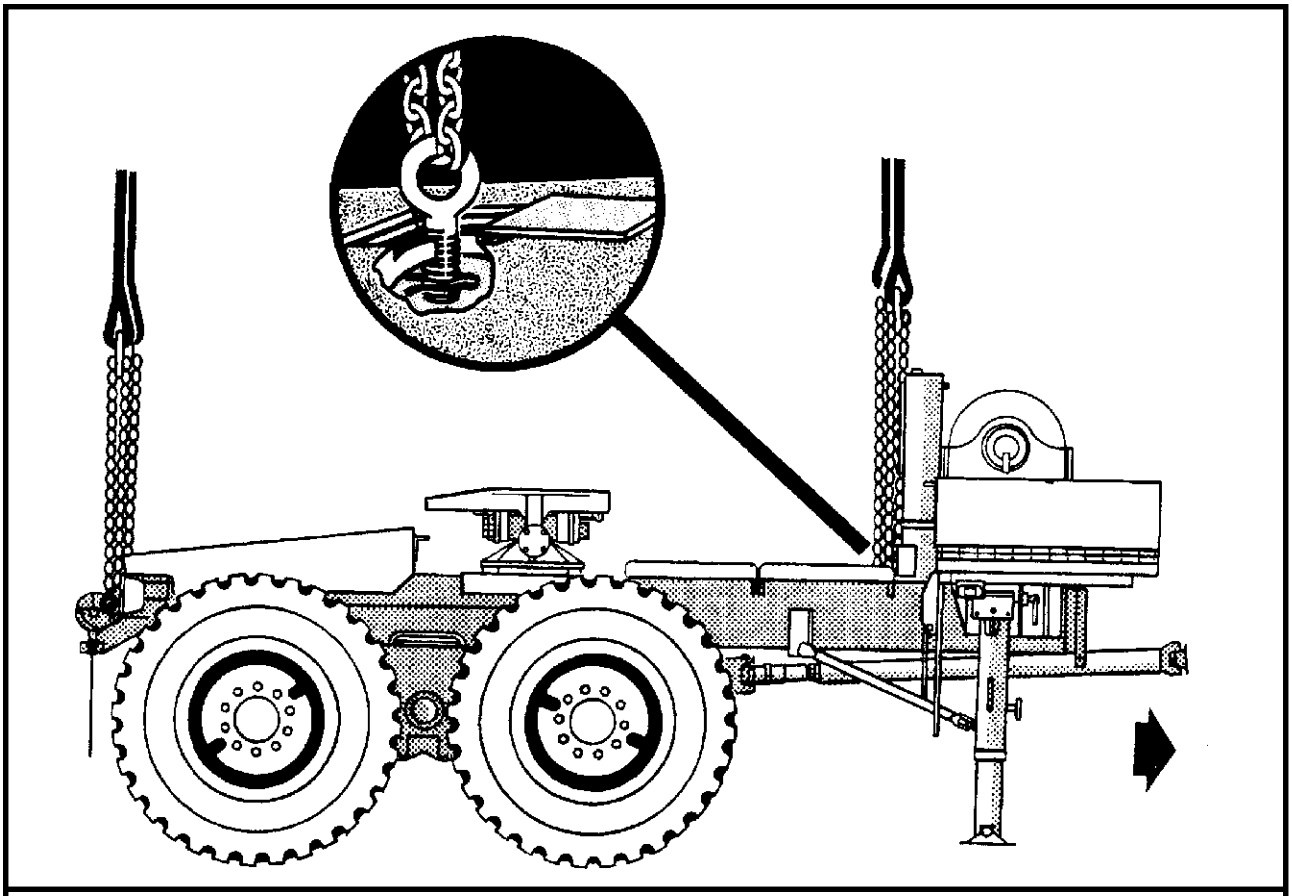

RIGGING STEPS

1. Connect 2 sling legs to apex fitting number 1. Position the apex fitting on top of the winch.

2. Loop the chain end of the sling legs through their respective lift provisions located on the main frame below the winch. Place the correct link from Table 3-7 in the grab hook.

3. Connect 2 sling legs to apex fitting number 2. Position the apex fitting on top of the aft end of the trailer adapter.

4. Loop the chain end of the sling legs through their respective lift provisions located on each side of the towing pintle hook. Place the correct link from Table 3-7 in the grab hook.

5. Secure all excess chain with tape or Type III nylon cord.

6. Cluster and tie or tape (breakaway technique) the sling legs in each sling set together to prevent entanglement during hookup and lift-off.

Figure 3-7. Mk16 Trailer, Fifth-Wheel Adapter

3-9. Mk17 Trailer, Drop Side, Cargo

a. Applicability. The following item in Table 3-8 is certified for the helicopter(s) listed in the following table by the US Army Soldier Systems Center:

Table 3-8. Mk17 Trailer, Drop Side, Cargo

NOMENCLATURE	MAX WEIGHT (POUNDS)	SLING SET	LINK COUNT FRONT/ REAR	TYPE OF AIRCRAFT	RECOMMENDED AIRSPEED (KNOTS)
Mk17 Trailer, Drop Side , Cargo	23,000	40K	4/16	CH-53	120

b. Materials. The following materials are required to rig this load:

(1) Sling set (40,000-pound capacity) with one additional apex fitting.

(2) Tape, adhesive, pressure-sensitive, 2-inch wide roll.

(3) Cord, nylon, Type III, 550-pound breaking strength.

(4) Webbing, cotton, 1/4-inch, 80-pound breaking strength.

c. Personnel. Two persons can prepare and rig this load in 20 minutes.

d. Procedures. The following procedures apply to this load:

(1) Preparation. Prepare the load using the following steps:

(a) Disengage the Mk17 from the Mk48 prime mover according to the operator's manual.

(b) Secure all hoses with tape or Type III nylon cord.

(c) Tape all lights, reflectors, and glass fixtures.

(d) Ensure all tool compartment doors are closed and secured.

(e) Remove the safety retainer pins from the lifting eyelets located under the doors in the bed of the trailer. Unscrew the lifting eyelets from their stored position and reinsert the lifting eyelets so that the eyelet portion is accessible from the bed of the trailer through the access doors. Screw the lifting eyelets all the way in and back out one full turn. Reinsert the safety retainer pins to prevent the lifting eyelets from backing out in flight.

(2) Rigging. Rig the load according to the steps in Figure 3-8.

(3) Hookup. The hookup teams stand on the bed of the trailer. The static wand person discharges the static electricity with the static wand. The forward hookup person places apex fitting 1 onto the forward cargo hook. The aft hookup person places apex fitting 2 onto the aft cargo hook. The hookup team then carefully dismounts the vehicle and remains close to the load as the helicopter removes slack from the sling legs. When successful hookup is assured, the hookup team quickly exits the area underneath the helicopter to the designated rendezvous point.

(4) Derigging. Derigging is the reverse of the preparation and rigging procedures in steps d (1) and d (2).

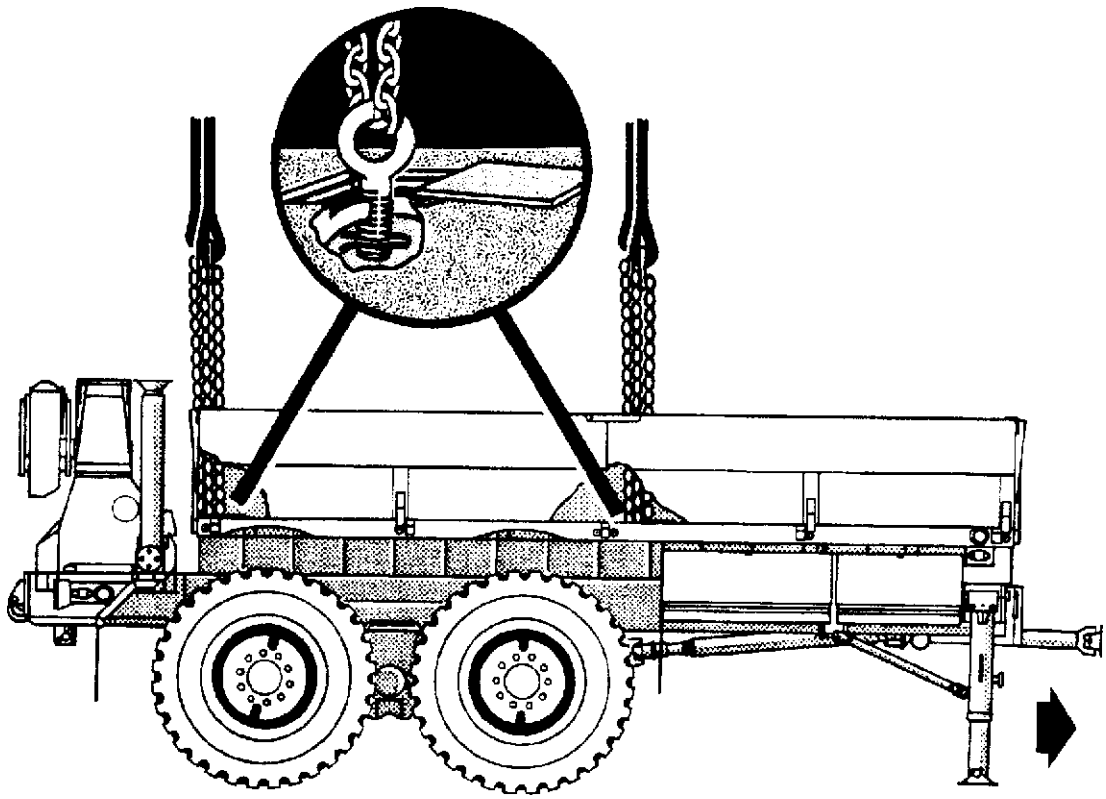

RIGGING STEPS

1. Connect 2 sling legs to apex fitting number 1. Position the apex fitting on top of the front of the trailer.

2. Loop the chain end of the sling legs through their respective lift provisions located in the trailer bed. Place the correct link from Table 3-8 in the grab hook.

3. Connect 2 sling legs to apex fitting number 2. Position the apex fitting on top of the aft end of the trailer .

4. Loop the chain end of the sling legs through their respective lift provisions located on the aft end of the trailer just forward of the crane. Place the correct link from Table 3-8 in the grab hook.

5. Secure all excess chain with tape or Type III nylon cord.

6. Cluster and tie or tape (breakaway technique) the sling legs in each sling set together to prevent entanglement during hookup and lift-off.

Figure 3-8. Mk17 Trailer, Drop Side, Cargo

3-10. M871A1 Semitrailer

a. Applicability. The following item in Table 3-9 is certified for the helicopter(s) listed in the following table by the US Army Soldier Systems Center:

Table 3-9. M871A1 Semitrailer

NOMENCLATURE	MAX WEIGHT (POUNDS)	SLING SET	LINK COUNT FRONT/ REAR	TYPE OF AIRCRAFT	RECOMMENDED AIRSPEED (KNOTS)
M871A1 Semitrailer (empty)	12,240	25K	30/3	CH-47	80

NOTE: This trailer must be empty to sling load.

b. Materials. The following materials are required to rig this load:

(1) Sling set (25,000-pound capacity) with one additional apex fitting.

(2) Tape, adhesive, pressure-sensitive, 2-inch wide roll.

(3) Cord, nylon, Type III, 550-pound breaking strength.

(4) Webbing, cotton, 1/4-inch, 80-pound breaking strength.

(5) Tie-down strap, cargo, CGU-1/B, as required.

c. Personnel. Two persons can prepare and rig this load in 20 minutes.

d. Procedures. The following procedures apply to this load:

(1) Preparation. Prepare the load using the following steps:

(a) Level the trailer by adjusting the landing gear.

(b) Remove the sideboards and tailgate panels. Secure the sideboards and tailgate panels in the front of trailer using CGU-1/B tie-down straps.

(c) Secure the compartment doors with tape or Type III nylon cord.

(d) Secure the spare tire in the compartment with Type III nylon cord.

(e) At each lifting provision location, pull down on the latch and push out on the bolt at the inboard end of each lifting eye. Slide the lifting eye out from the housing as far as it will go. Do not lift the semitrailer unless each lifting eye is fully extended.

(2) Rigging. Rig the load according to the steps in Figure 3-9.

(3) Hookup. The hookup teams stand on the bed of the trailer. The static wand person discharges the static electricity with the static wand. The forward hookup person places apex fitting 1 onto the forward cargo hook. The aft hookup person places apex fitting 2 onto the aft cargo hook. The hookup team then carefully dismounts the vehicle and remains close to the load as the helicopter removes slack from the sling legs. When successful hookup is assured, the hookup team quickly exits the area underneath the helicopter to the designated rendezvous point.

(4) Derigging. Derigging is the reverse of the preparation and rigging procedures in steps d (1) and d (2).

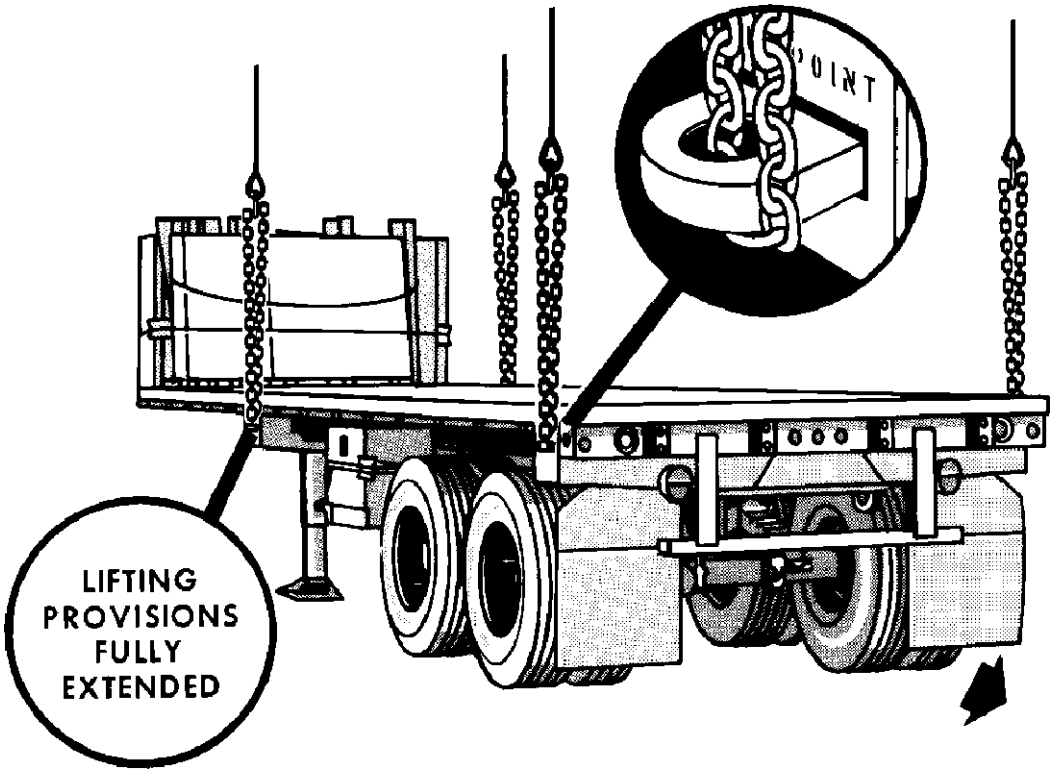

RIGGING STEPS

1. Connect 2 sling legs to apex fitting number 1. Position the apex fitting on top of the kingpin end of the trailer.

2. Loop the chain end of the sling legs through their respective lift provisions located outboard from the landing gear. Place the correct link from Table 3-9 in the grab hook.

3. Connect 2 sling legs to apex fitting number 2. Position the apex fitting on top of the wheel end of the trailer .

4. Loop the chain end of the sling legs through their respective lift provisions located aft of the rear wheels. Place the correct link from Table 3-9 in the grab hook.

5. Secure all excess chain with tape or Type III nylon cord.

6. Cluster and tie or tape (breakaway technique) the sling legs in each sling set together to prevent entanglement during hookup and lift-off.

Figure 3-9. M871A1 Semitrailer

3-11. High Mobility Trailers (HMT), M1101/M1102

a. Applicability. The following items in Table 3-10 are certified for the helicopter(s) listed in the following table by the Soldier Systems Center:

Table 3-10. High Mobility Trailers

NOMENCLATURE	MAX WEIGHT (POUNDS)	SLING SET	LINK COUNT FRONT/ REAR	OF AIRCRAFT	RECOMMENDED AIRSPEED (KNOTS)
High Mobility Trailer (light), M1101	3,400	10K	20/3	CH-47	120
High Mobility Trailer (heavy), M1102	4,200	10K	20/3	CH-47	120
Tactical Messaging System (TMS), Cargo Carrier, M1102	4,200	10K	20/3	CH-47	120

b. Materials. The following materials are required to rig this load:

(1) Sling set (10,000-pound capacity) with one additional apex fitting.

(2) Tape, adhesive, pressure-sensitive, 2-inch wide roll.

(3) Cord, nylon, Type III, 550-pound breaking strength.

(4) Webbing, cotton, 1/4-inch, 80-pound breaking strength.

(5) Felt sheet, cattle hair, Type IV, 1/2-inch or suitable substitute.

(6) Tie-down strap, cargo, CGU-1/B, as required.

c. Personnel. Two persons can prepare and rig this load in 10 minutes.

d. Procedures. The following procedures apply to this load:

(1) Preparation. Prepare the load using the following steps:

(a) Remove the two stabilizer legs from their storage location on the front of the trailer. Place the lower support section in the fully retracted position. Install the stabilizer legs on the rear of the trailer.

(b) Install the front jack and lower the lunette as close to the ground as possible.

(c) Remove the canvas cover and racks from the trailer. Place these items in the bed of the trailer. Place the accompanying load on top of the canvas cover and secure it with the tie-down straps.

(d) Secure the light cable to the top of the drawbar with tape or Type III nylon cord.

(e) Engage the parking brake.

(2) Rigging. Rig the load according to the steps in Figure 3-10.

(3) Hookup. The hookup teams stand in the bed of the trailer and on the drawbar. The static wand person discharges the static electricity with the static wand. The forward hookup person places apex fitting 1 onto the forward cargo hook. The aft hookup person places apex fitting 2 onto the aft cargo hook. The hookup team then carefully dismounts the vehicle and remains close to the load as the helicopter removes slack from the sling legs. When successful hookup is assured, the hookup team quickly exits the area underneath the helicopter to the designated rendezvous point.

(4) Derigging. Derigging is the reverse of the preparation and rigging procedures in steps d (1) and d (2).

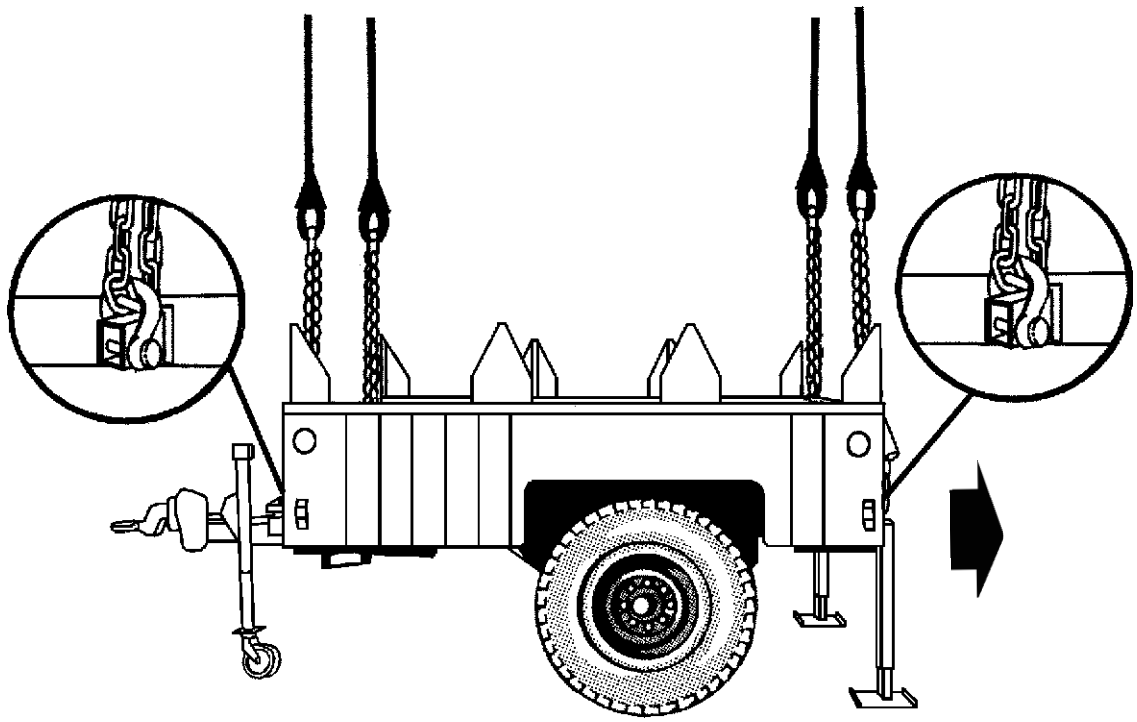

RIGGING STEPS

1. Connect 2 sling legs to apex fitting number 1. Position the apex fitting on top of the trailer.

2. Loop the chain end of the sling legs through their respective lift provisions. Place the correct link from Table 3-10 in the grab hook.

3. Connect 2 sling legs to apex fitting number 2. Position the apex fitting on top of the trailer.

4. Loop the chain end of the sling legs through their respective lift provisions. Place the correct link from Table 3-10 in the grab hook.

5. Secure all excess chain with tape or Type III nylon cord.

6. Pad the chain at and below where the chain contacts the trailer walls.

7. Cluster and tie or tape (breakaway technique) the sling legs in each sling set together to prevent entanglement during hookup and lift-off.

Figure 3-10. High Mobility Trailers

3-12. High Mobility Trailers (HMT) with Generator for Joint Surveillance Target Attack Radar (JSTAR) System

a. Applicability. The following items in Table 3-11 are certified for the helicopter(s) listed in the following table by the Soldier Systems Center:

Table 3-11. High Mobility Trailers with Generator (JSTAR)

NOMENCLATURE	MAX WEIGHT (POUNDS)	SLING SET	LINK COUNT FRONT/ REAR	TYPE OF AIRCRAFT	RECOMMENDED AIRSPEED (KNOTS)
Mission Trailer, W/O Transit Cases	3,960	10K	10/3	CH-47	90
Support Trailer, W/O Transit Cases	3,878	10K	10/3	CH-47	90

b. Materials. The following materials are required to rig this load:

(1) Sling set (10,000-pound capacity) with one additional apex fitting.

(2) Chain length, part number 38850-00053-101, from a 10,000-pound capacity sling set (4 each).

(3) Coupling link, part number 577-0615, from a 10,000-pound capacity sling set (4 each).

(4) Tape, adhesive, pressure-sensitive, 2-inch wide roll.

(5) Cord, nylon, Type III, 550-pound breaking strength.

(6) Webbing, cotton, 1/4-inch, 80-pound breaking strength.

(7) Felt sheet, cattle hair, Type IV, 1/2-inch or suitable substitute.

c. Personnel. Two persons can prepare and rig this load in 15 minutes.

d. Procedures. The following procedures apply to this load:

(1) Preparation. Prepare the load using the following steps:

(a) Engage the parking brake.

(b) Secure safety chains and brake hoses to the top of the drawbar with Type III nylon cord.

(c) Secure all lids, doors, and caps with tape or Type III nylon cord.

(d) Remove transit cases which will interfere with the sling legs and store them in the shelter.

(e) Install the rear stabilizer legs with the lower support section fully retracted.

(f) Remove the lunette jack and secure in the trailer bed.

(g) Secure the four lift rings on the trailer in the up position to a convenient point on the load with 1/4-inch cotton webbing.

(h) Connect one additional chain length to each chain of the sling set with the coupling link.

(2) Rigging. Rig the load according to the steps in Figure 3-11.

(3) Hookup. The hookup teams stand in the bed of the trailer and on the drawbar. The static wand person discharges the static electricity with the static wand. The forward hookup person places apex fitting 1 onto the forward cargo hook. The aft hookup person places apex fitting 2 onto the aft cargo hook. The hookup team then carefully dismounts the vehicle and remains close to the load as the helicopter removes slack from the sling legs.

When successful hookup is assured, the hookup team quickly exits the area underneath the helicopter to the designated rendezvous point.

(4) Derigging. Derigging is the reverse of the preparation and rigging procedures in steps d (1) and d (2).

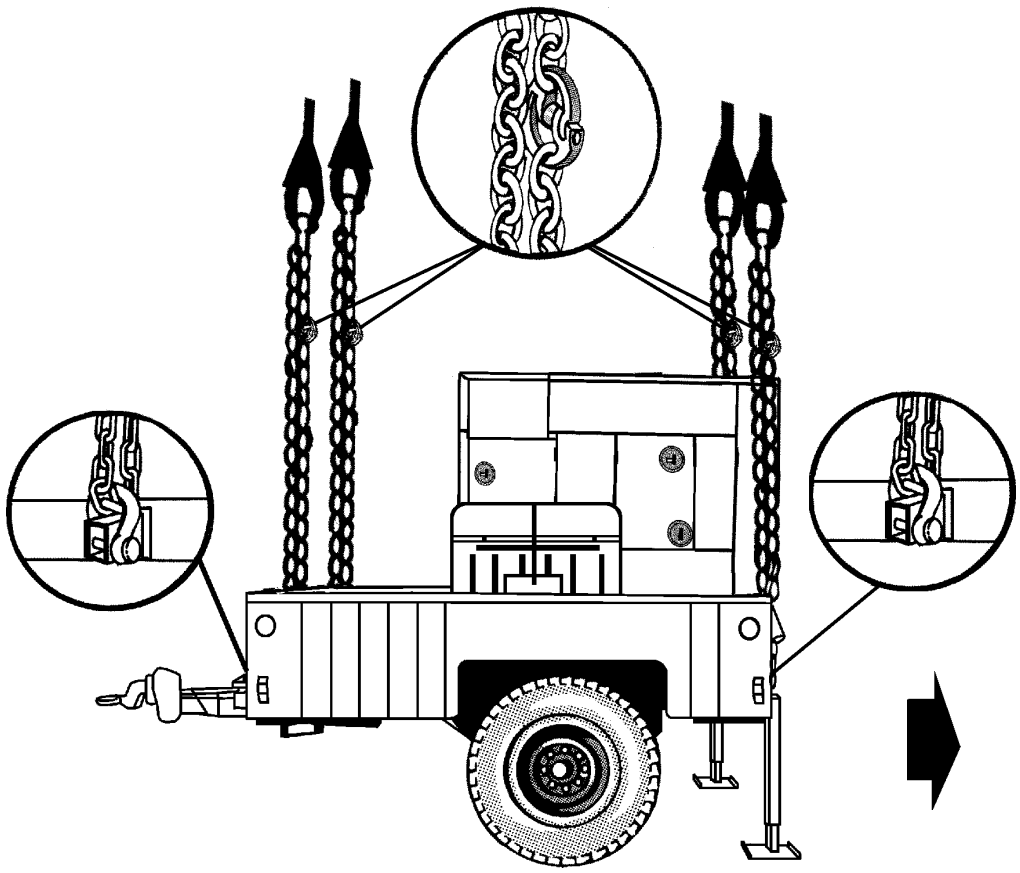

RIGGING STEPS

1. Connect 2 sling legs to apex fitting number 1. Position the apex fitting on top of the generator.

2. Loop the chain end of the sling legs through their respective lift provisions. Place the correct link from Table 3-11 in the grab hook.

3. Connect 2 sling legs to apex fitting number 2. Position the apex fitting on top of the generator.

4. Loop the chain end of the sling legs through their respective lift provisions. Place the correct link from Table 3-11 in the grab hook.

5. Secure all excess chain with tape or Type III nylon cord.

6. Pad the chain/sling where they contact the generator.

7. Cluster and tie or tape (breakaway technique) the sling legs in each sling set together to prevent entanglement during hookup and lift-off.

Figure 3-11. High Mobility Trailers with Generator (JSTAR)

3-13. High Mobility Trailer-Light (HMT), M1101 with AN/TSQ-198, Tactical Terminal Control System (TTCS)

a. Applicability. The following item in Table 3-12 is certified for the helicopter(s) listed in the following table by the US Soldier Systems Center:

Table 3-12. High Mobility Trailer-Light (HMT), M1101 with AN/TSQ-198

NOMENCLATURE	MAX WEIGHT (POUNDS)	SLING SET	LINK COUNT FRONT/ REAR	TYPE OF AIRCRAFT	RECOMMENDED AIRSPEED (KNOTS)
AN/TSQ-198, Tactical Terminal Control System	2,720	10K	20/3	CH-47	120

b. Materials. The following materials are required to rig this load:

(1) Sling set (10,000-pound capacity) with one additional apex fitting.

(2) Tape, adhesive, pressure-sensitive, 2-inch wide roll.

(3) Cord, nylon, Type III, 550-pound breaking strength.

(4) Webbing, cotton, 1/4-inch, 80-pound breaking strength.

(5) Felt sheet, cattle hair, Type IV, 1/2-inch or suitable substitute.

(6) Strap, cargo, tie-down, CGU-1/B (as required).

c. Personnel. Two persons can prepare and rig this load in 10 minutes.

d. Procedures. The following procedures apply to this load:

(1) Preparation. Prepare the load using the following steps:

(a) Engage the parking brake.

(b) Secure safety chains and brake hoses to the top of the drawbar with Type III nylon cord.

(c) Secure all lids, doors, and caps with tape or Type III nylon cord.

(d) Place additional cargo on the trailer bed and secure the cargo with CGU-1/B tiedown straps.

(e) Install the rear stabilizer legs with the lower support section fully retracted.

(f) Lower the front jack so the lunette is close to the ground.

(g) Secure the four lift rings on the trailer in the up position to a convenient point on the load with 1/4-inch cotton webbing.

(2) Rigging. Rig the load according to the steps in Figure 3-12.

(3) Hookup. The hookup teams stand in the bed of the trailer and on the drawbar. The static wand person discharges the static electricity with the static wand. The forward hookup person places apex fitting 1 onto the forward cargo hook. The aft hookup person places apex fitting 2 onto the aft cargo hook. The hookup team then carefully dismounts the vehicle and remains close to the load as the helicopter removes slack from the sling legs. When successful hookup is assured, the hookup team quickly exits the area underneath the helicopter to the designated rendezvous point.

(4) Derigging. Derigging is the reverse of the preparation and rigging procedures in steps d (1) and d (2).

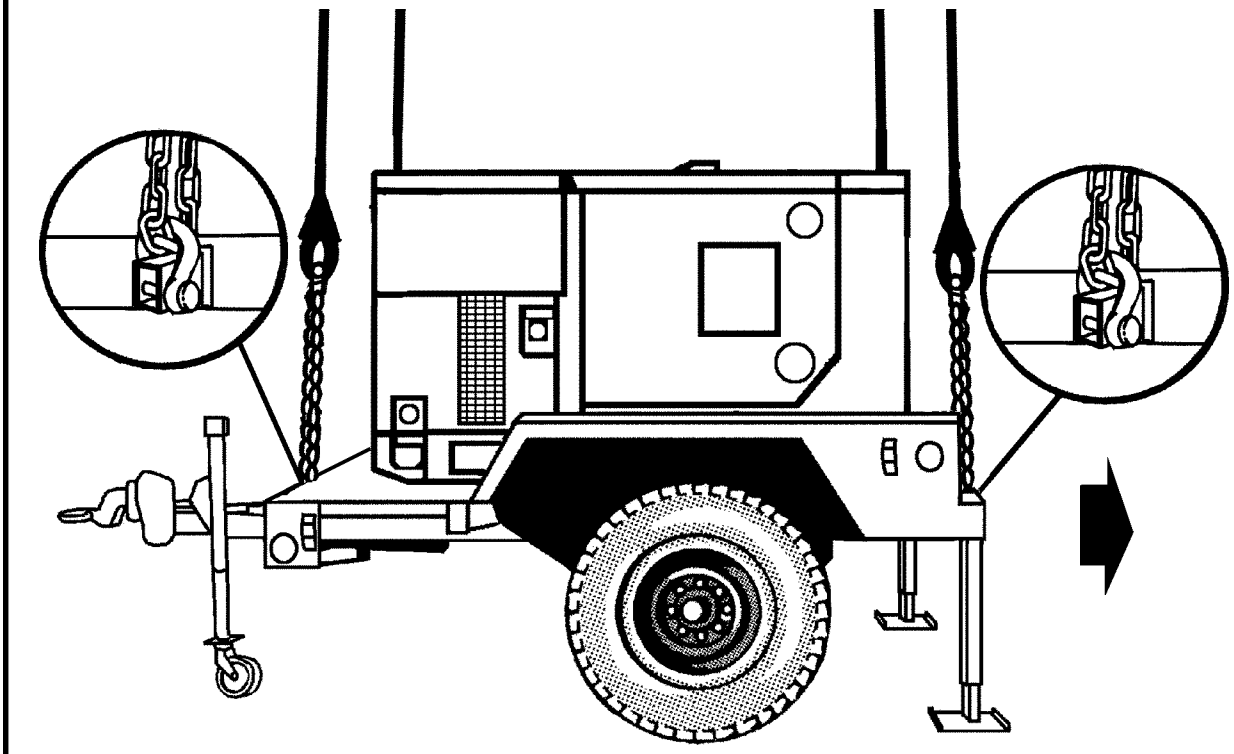

RIGGING STEPS

1. Connect 2 sling legs to apex fitting number 1. Position the apex fitting on top of the generator.

2. Loop the chain end of the sling legs through their respective lift provisions. Place the correct link from Table 3-12 in the grab hook.

3. Connect 2 sling legs to apex fitting number 2. Position the apex fitting on top of the generator.

4. Loop the chain end of the sling legs through their respective lift provisions. Place the correct link from Table 3-12 in the grab hook.

5. Secure all excess chain with tape or Type III nylon cord.

6. Pad the chain/sling where they contact the generator.

7. Cluster and tie or tape (breakaway technique) the sling legs in each sling set together to prevent entanglement during hookup and lift-off.

Figure 3-12. High Mobility Trailer-Light (HMT), M1101 with AN/TSQ-198

3-14. Special Operations Media Systems (SOMS B) on Commander's Crash-Out-Package System (COPS) Trailer

a. Applicability. The following items in Table 3-13 are certified for the helicopter(s) listed in the following table by the Soldier Systems Center:

Table 3-13. Special Operations Media Systems on COPS Trailer

NOMENCLATURE	MAX WEIGHT (POUNDS)	SLING SET	LINK COUNT FRONT/ REAR	TYPE OF AIRCRAFT	RECOMMENDED AIRSPEED (KNOTS)
Environmental Control Unit (ECU) on COPS Trailer	4,080	10K	5/35	CH-47	120
NON-ECU on COPS Trailer	3,145	10K	5/35	CH-47	120

b. Materials. The following materials are required to rig this load:

(1) Sling set (10,000-pound capacity) with one additional apex fitting.

(2) Tape, adhesive, pressure-sensitive, 2-inch wide roll.

(3) Cord, nylon, Type III, 550-pound breaking strength.

(4) Webbing, cotton, 1/4-inch, 80-pound breaking strength.

(5) Felt sheet, cattle hair, Type IV, 1/2-inch or suitable substitute.

(6) Strap, cargo, tie-down, CGU-1/B (as required).

c. Personnel. Two persons can prepare and rig this load in 10 minutes.

d. Procedures. The following procedures apply to this load:

(1) Preparation. Prepare the load using the following steps:

(a) Engage the parking brake.

(b) Secure light cables, safety chains, and brake hoses to the top of the drawbar with tape or Type III nylon cord.

(c) Secure all lids, doors, and caps with tape or Type III nylon cord.

(d) Place additional cargo on the trailer bed and secure the cargo with CGU-1/B tiedown straps.

(e) Install the rear stabilizer legs with the lower support section fully retracted.

(f) Lower the front jack so the lunette is close to the ground.

(2) Rigging. Rig the load according to the steps in Figure 3-13.

(3) Hookup. The hookup teams stand in the bed of the trailer and on the drawbar. The static wand person discharges the static electricity with the static wand. The forward hookup person places apex fitting 1 onto the forward cargo hook. The aft hookup person places apex fitting 2 onto the aft cargo hook. The hookup team then carefully dismounts the vehicle and remains close to the load as the helicopter removes slack from the sling legs. When successful hookup is assured, the hookup team quickly exits the area underneath the helicopter to the designated rendezvous point.

(4) Derigging. Derigging is the reverse of the preparation and rigging procedures in steps d (1) and d (2).

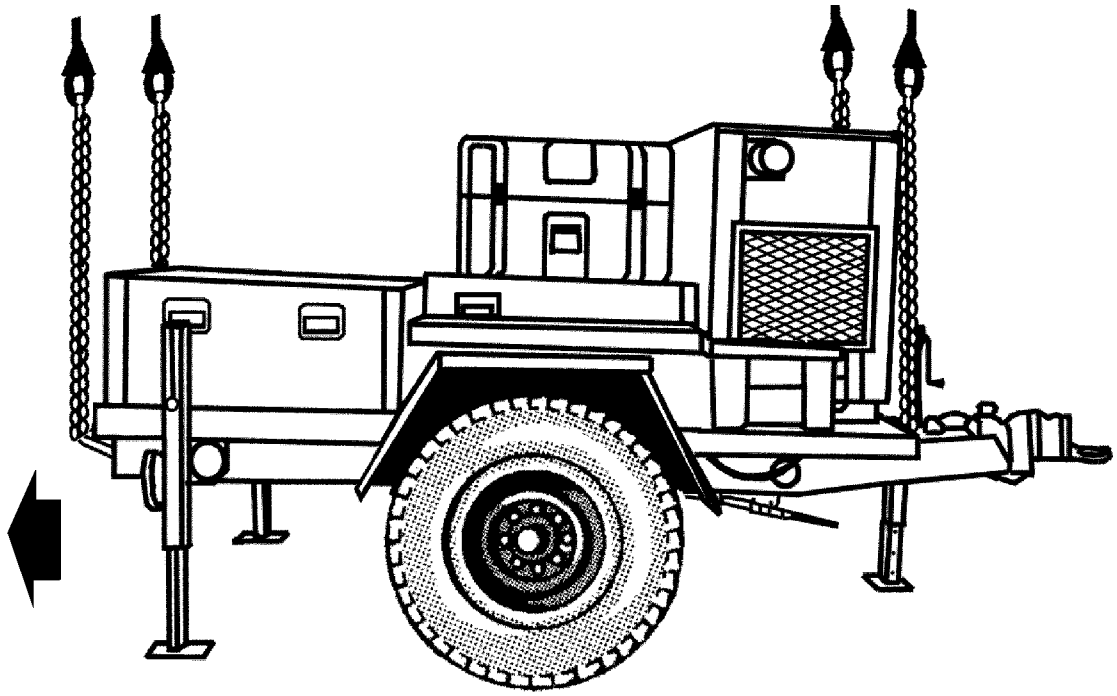

RIGGING STEPS

1. Connect 2 sling legs to apex fitting number 1. Position the apex fitting on top of the trailer.

2. Loop the chain end of the sling legs through their respective lift provisions. Place the correct link from Table 3-13 in the grab hook.

3. Connect 2 sling legs to apex fitting number 2. Position the apex fitting on top of the trailer.

4. Loop the chain end of the sling legs through their respective lift provisions. Place the correct link from Table 3-13 in the grab hook.

5. Secure all excess chain with tape or Type III nylon cord.

6. Pad the chain/sling where they contact the trailer or generator.

7. Cluster and tie or tape (breakaway technique) the sling legs in each sling set together to prevent entanglement during hookup and lift-off.

Figure 3-13. Special Operations Media Systems on COPS Trailer

3-15. Deployable Print Production Center (DPPC) on COPS Trailer

a. Applicability. The following item in Table 3-14 is certified for the helicopter(s) listed in the following table by the Soldier Systems Center:

Table 3-14. Deployable Print Production Center (DPPC) on COPS Trailer

NOMENCLATURE	MAX WEIGHT (POUNDS)	SLING SET	LINK COUNT FRONT/ REAR	TYPE OF AIRCRAFT	RECOMMENDED AIRSPEED (KNOTS)
Deployable Print Production Center on COPS Trailer	4,400	10K	5/35	CH-47	80
Deployable Print Production Center on COPS Trailer	4,400	15K	5/35	CH-53	110

b. Materials. The following materials are required to rig this load:

(1) Sling set (10,000-pound capacity) with one additional apex fitting.

OR

(2) Sling set (15,000-pound capacity) (2 each).

(3) Tape, adhesive, pressure-sensitive, 2-inch wide roll.

(4) Cord, nylon, Type III, 550-pound breaking strength.

(5) Webbing, cotton, 1/4-inch, 80-pound breaking strength.

(6) Felt sheet, cattle hair, Type IV, 1/2-inch or suitable substitute.

c. Personnel. Two persons can prepare and rig this load in 10 minutes.

d. Procedures. The following procedures apply to this load:

(1) Preparation. Prepare the load using the following steps:

(a) Engage the parking brake.

(b) Secure light cables, safety chains, and brake hoses to the top of the drawbar with tape or Type III nylon cord.

(c) Place additional cargo on the trailer bed and secure the cargo with CGU-1/B tiedown straps.

(d) Install the rear stabilizer legs with the lower support section fully retracted.

(e) Lower the front jack so the lunette is close to the ground.

(2) Rigging. Rig the load according to the steps in Figure 3-14.

(3) Hookup. The hookup teams stand in the bed of the trailer and on the drawbar. The static wand person discharges the static electricity with the static wand. The forward hookup person places apex fitting 2 onto the forward cargo hook. The aft hookup person places apex fitting 1 onto the aft cargo hook. The hookup team then carefully dismounts the vehicle and remains close to the load as the helicopter removes slack from the sling legs. When successful hookup is assured, the hookup team quickly exits the area underneath the helicopter to the designated rendezvous point.

(4) Derigging. Derigging is the reverse of the preparation and rigging procedures in steps d (1) and d (2).

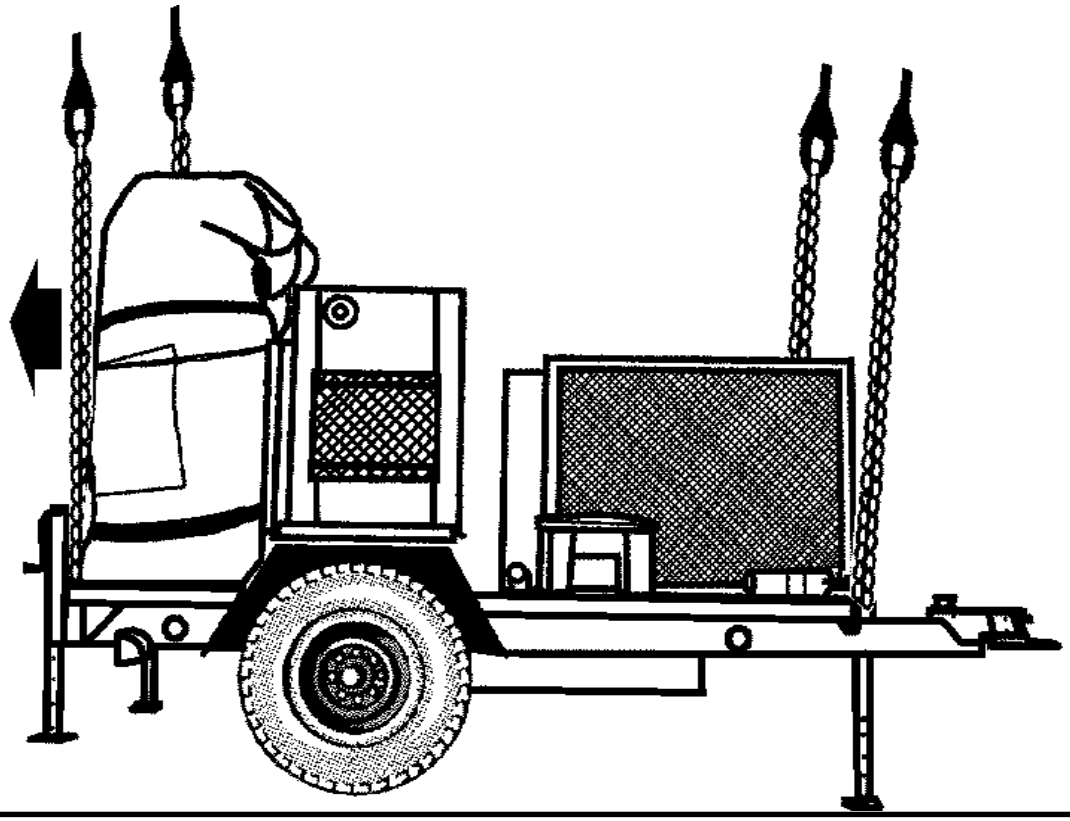

RIGGING STEPS

1. Connect 2 sling legs to apex fitting number 1. Position the apex fitting on top of the trailer.

2. Loop the chain end of the sling legs through their respective lift provisions located on the outer ends of the front bumper (generator end). Place the correct link from Table 3-14 in the grab hook.

3. Connect 2 sling legs to apex fitting number 2. Position the apex fitting on top of the trailer.

4. Loop the chain end of the sling legs through their respective lift provisions located on the outer ends of the rear bumper. Place the correct link from Table 3-14 in the grab hook. Secure all excess chain with tape or Type III nylon cord.

5. Pad the chain/sling where they contact the trailer or generator.

6. Cluster and tie or tape (breakaway technique) the sling legs in each sling set together to prevent entanglement during hookup and lift-off.

Figure 3-14. Deployable Print Production Center on COPS Trailer

3-16. XM1112 400 Gallon Water Trailer

a. Applicability. The following item in Table 3-15 is certified for the helicopter(s) listed in the following table by the US Army Soldier Systems Center:

Table 3-15. XM1112 400 Gallon Water Trailer

NOMENCLATURE	MAX WEIGHT (POUNDS)	SLING SET	LINK COUNT FRONT/ REAR	TYPE OF AIRCRAFT	RECOMMENDED AIRSPEED (KNOTS)
XM 1112 400 Gallon Water Trailer, Empy	3,860	10K	20/3	CH-47	130

b. Materials. The following materials are required to rig this load:

(1) Sling set (10,000-pound capacity) with one additional apex fitting.

(2) Tape, adhesive, pressure-sensitive, 2-inch wide roll.

(3) Cord, nylon, Type III, 550-pound breaking strength.

(4) Webbing, cotton, 1/4-inch, 80-pound breaking strength.

c. Personnel. Two persons can prepare and rig this load in 10 minutes.

d. Procedures. The following procedures apply to this load:

(1) Preparation. Prepare the load using the following steps:

(a) Secure all loose chains, hoses, and cables to the trailer drawbar with tape or Type III nylon cord.

(b) Ensure the tongue wheel is in the down and locked position.

(c) Close and secure the tank lid.

(d) Engage the parking brake.

(2) Rigging. Rig the load according to the steps in Figure 3-15.

(3) Hookup. The hookup teams stand on the trailer fenders or on the front of the trailer. The static wand person discharges the static electricity with the static wand. The forward hookup person places apex fitting 1 onto the forward cargo hook. The aft hookup person places apex fitting 2 onto the aft cargo hook. The hookup team then carefully dismounts the trailer and remains close to the load as the helicopter removes slack from the sling legs. When successful hookup is assured, the hookup team quickly exits the area underneath the helicopter to the designated rendezvous point.

(4) Derigging. Derigging is the reverse of the preparation and rigging procedures in steps d (1) and d (2).

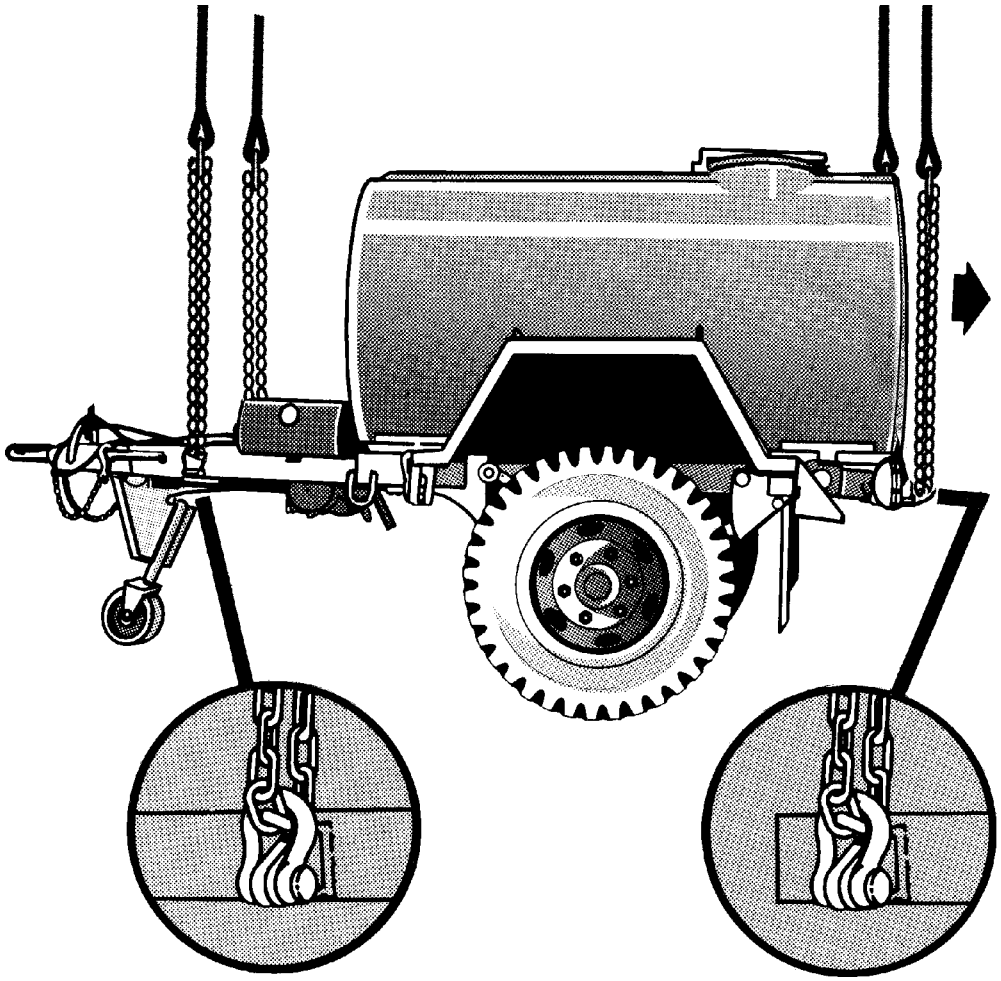

RIGGING STEPS

1. Connect 2 sling legs to apex fitting number 1. Position the apex fitting on top of the forward end (lunette end) of the trailer.

2. Loop the chain end of the sling legs through their respective lift provisions located in the drawbar of the trailer. Place the correct link from Table 3-15 in the grab hook.

3. Connect 2 sling legs to apex fitting number 2. Position the apex fitting on top of the aft end of the trailer.

4. Loop the chain end of the sling legs through their respective lift provisions located on the rear bumper of the trailer. Place the correct link from Table 3-15 in the grab hook.

5. Secure all excess chain with tape or Type III nylon cord.

6. Cluster and tie or tape (breakaway technique) the sling legs in each sling set together to prevent entanglement during hookup and lift-off.

Figure 3-15. XM1112 Gallon Water Trailer

3-17. M105A3 Trailer

a. Applicability. The following item in Table 3-16 is certified for the helicopter(s) listed in the following table by the US Army Soldier Systems Center:

Table 3-16. M105A3 Trailer

NOMENCLATURE	MAX WEIGHT (POUNDS)	SLING SET	LINK COUNT FRONT/ REAR	TYPE OF AIRCRAFT	RECOMMENDED AIRSPEED (KNOTS)
M105A3 Trailer, Empty	2,600	10K	40/3	CH-47	120
M105A3 Trailer, Loaded	5,580	10K	40/3	CH-47	120

b. Materials. The following materials are required to rig this load:

(1) Sling set (10,000-pound capacity) with one additional apex fitting.

(2) Tape, adhesive, pressure-sensitive, 2-inch wide roll.

(3) Cord, nylon, Type III, 550-pound breaking strength.

(4) Webbing, cotton, 1/4-inch, 80-pound breaking strength.

c. Personnel. Two persons can prepare and rig this load in 10 minutes.

d. Procedures. The following procedures apply to this load:

(1) Preparation. Prepare the load using the following steps:

(a) Raise the trailer's jack stand so the pintle is on the ground.

(b) Secure all loose chains, hoses, and cables to the trailer drawbar with tape or Type III nylon cord.

(c) Engage the parking brake.

(2) Rigging. Rig the load according to the steps in Figure 3-16.

(3) Hookup. The hookup teams stand in the bed of the trailer. The static wand person discharges the static electricity with the static wand. The forward hookup person places apex fitting 1 onto the forward cargo hook. The aft hookup person places apex fitting 2 onto the aft cargo hook. The hookup team then carefully dismounts the trailer and remains close to the load as the helicopter removes slack from the sling legs. When successful hookup is assured, the hookup team quickly exits the area underneath the helicopter to the designated rendezvous point.

(4) Derigging. Derigging is the reverse of the preparation and rigging procedures in steps d (1) and d (2).

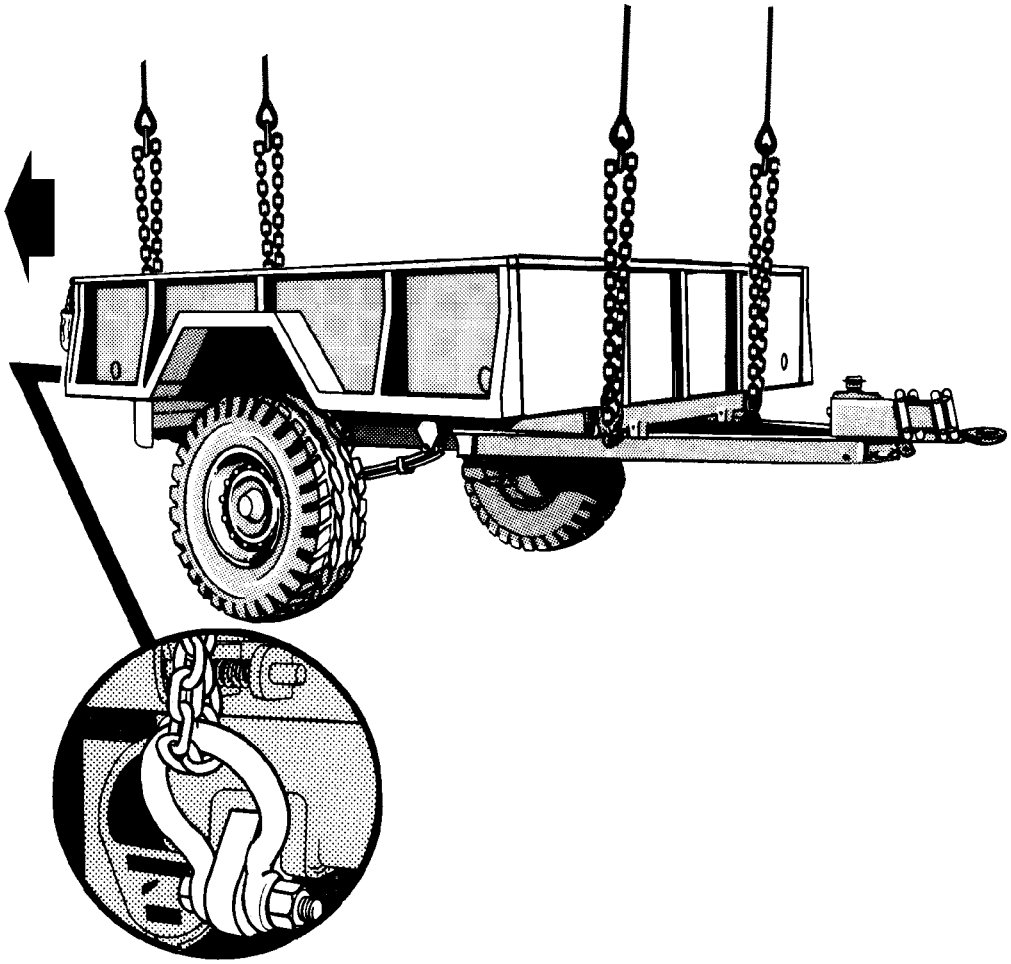

RIGGING STEPS

1. Connect 2 sling legs to apex fitting number 1. Position the apex fitting on top of the forward end (lunette end) of the trailer.

2. Loop the chain end of the sling legs through their respective lift provisions located in the front of the trailer. Place the correct link from Table 3-16 in the grab hook.

3. Connect 2 sling legs to apex fitting number 2. Position the apex fitting on top of the aft end of the trailer.

4. Loop the chain end of the sling legs through their respective lift provisions located on the aft end of the trailer. Place the correct link from Table 3-16 in the grab hook.

5. Secure all excess chain with tape or Type III nylon cord.

6. Cluster and tie or tape (breakaway technique) the sling legs in each sling set together to prevent entanglement during hookup and lift-off.

Figure 3-16. M105A3 Trailer

3-18. M1082 Light Medium Tactical Vehicle (LMTV) and M1095 Medium Tactical Vehicle (MTV) Trailers

a. Applicability. The following items in Table 3-17 are certified for the helicopter(s) listed in the following table by the US Army Soldier Systems Center:

Table 3-17. M1082 Light Medium Tactical Vehicle (LMTV) and M1095 Medium Tactical Vehicle (MTV) Trailers

NOMENCLATURE	MAX WEIGHT (POUNDS)	SLING SET	LINK COUNT FRONT/ REAR	TYPE OF AIRCRAFT	RECOMMENDED AIRSPEED (KNOTS)
M1082 LMTV Trailer	11,510	25K	10/3	CH-47	120
M1095 MTV Trailer	15,780	25K	20/3	CH-47	70

b. Materials. The following materials are required to rig this load:

(1) Sling set (25,000-pound capacity) with one additional apex fitting.

(2) Tape, adhesive, pressure-sensitive, 2-inch wide roll.

(3) Cord, nylon, Type III, 550-pound breaking strength.

(4) Webbing, cotton, 1/4-inch, 80-pound breaking strength.

c. Personnel. Two persons can prepare and rig this load in 10 minutes.

d. Procedures. The following procedures apply to this load:

(1) Preparation. Prepare the load using the following steps:

(a) Position the trailer's jack stand in the down position so the trailer sets level.

(b) Secure all loose chains, hoses, and cables to the trailer drawbar with tape or Type III nylon cord.

(c) Engage the parking brake.

(d) Extend the lift provision bars to the widest position and lock into place with the locking pins. Secure the locking pins in place with tape.

Note: Ensure the lift eyes on the lift provision bars are perpendicular to the ground.

(e) Remove the side and end panels and stow in the storage boxes under the bed of the trailer. Secure the storage latches with tape.

(2) Rigging. Rig the load according to the steps in Figure 3-17.

(3) Hookup. The hookup teams stand in the bed of the trailer. The static wand person discharges the static electricity with the static wand. The forward hookup person places apex fitting 1 onto the forward cargo hook. The aft hookup person places apex fitting 2 onto the aft cargo hook. The hookup team then carefully dismounts the trailer and remains close to the load as the helicopter removes slack from the sling legs. When successful hookup is assured, the hookup team quickly exits the area underneath the helicopter to the designated rendezvous point.

(4) Derigging. Derigging is the reverse of the preparation and rigging procedures in steps d (1) and d (2).

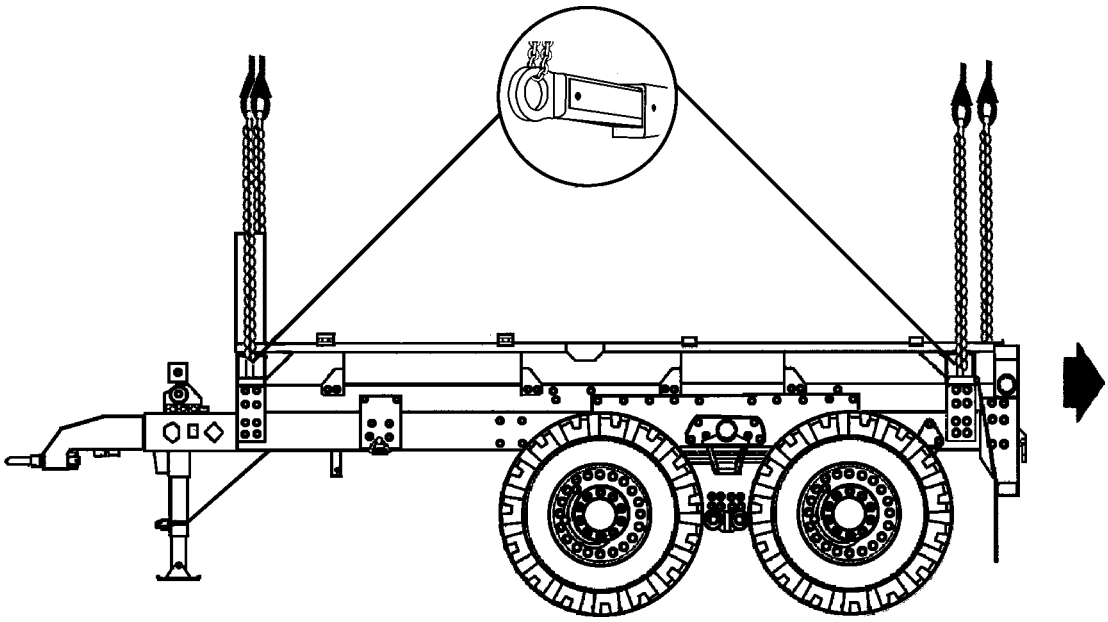

RIGGING STEPS

1. Connect 2 sling legs to apex fitting number 1. Position the apex fitting on top of the forward end (lunette end) of the trailer.

2. Loop the chain end of the sling legs through their respective lift provision bar located on the front end (lunette end) of the trailer. Place the correct link from Table 3-17 in the grab hook.

3. Connect 2 sling legs to apex fitting number 2. Position the apex fitting on top of the aft end of the trailer.

4. Loop the chain end of the sling legs through their respective lift provision bar located on the aft end of the trailer. Place the correct link from Table 3-17 in the grab hook.

5. Secure all excess chain with tape or Type III nylon cord.

6. Cluster and tie or tape (breakaway technique) the sling legs in each sling set together to prevent entanglement during hookup and lift-off.

Figure 3-17. M1082 Light Medium Tactical Vehicle (LMTV) and M1095 Medium Tactical Vehicle (MTV) Trailers

3-19. Assault Command Post With High Mobility Wheel Set

a. Applicability. The following item in Table 3-18 is certified for the helicopter(s) listed in the following table by the Soldier Systems Center:

Table 3-18. Assault Command Post With High Mobility Wheel Set

NOMENCLATURE	MAX WEIGHT (POUNDS)	SLING SET	LINK COUNT FRONT/ REAR	TYPE OF AIRCRAFT	RECOMMENDED AIRSPEED (KNOTS)
Assault Command Post (ACP), Housed in Expandable Light Airmobile Shelter (ELAMS), with High Mobility Wheel Set	13,240	25K	ECU is Front 20/3	CH-47	100

b. Materials. The following materials are required to rig this load:

(1) Sling set (25,000-pound capacity) with one additional apex fitting.

(2) Tape, adhesive, pressure-sensitive, 2-inch wide roll.

(3) Cord, nylon, Type III, 550-pound breaking strength.

(4) Webbing, cotton, 1/4-inch, 80-pound breaking strength.

c. Personnel. Two persons can prepare and rig this load in 15 minutes.

d. Procedures. The following procedures apply to this load:

(1) Preparation. Prepare the load using the following steps:

(a) Ensure manufacturer approved tiedown assemblies (2 each) are in place between the shelter and each wheel set.

(b) Remove all antennas and secure inside the shelter.

(c) Secure all lids, doors, and caps with tape or Type III nylon cord.

(d) Secure all loose equipment inside the shelter with tape, lashings, or Type III nylon cord.

(e) Secure the tow bar in the up position with Type III nylon cord.

(2) Rigging. Rig the load according to the steps in Figure 3-18.

(3) Hookup. The hookup teams stand on the roof of the shelter. The static wand person discharges the static electricity with the static wand. The forward hookup person places apex fitting 1 onto the forward cargo hook. The aft hookup person places apex fitting 2 onto the aft cargo hook. The hookup team then carefully dismounts the vehicle and remains close to the load as the helicopter removes slack from the sling legs. When successful hookup is assured, the hookup team quickly exits the area underneath the helicopter to the designated rendezvous point.

(4) Derigging. Derigging is the reverse of the preparation and rigging procedures in steps d (1) and d (2).

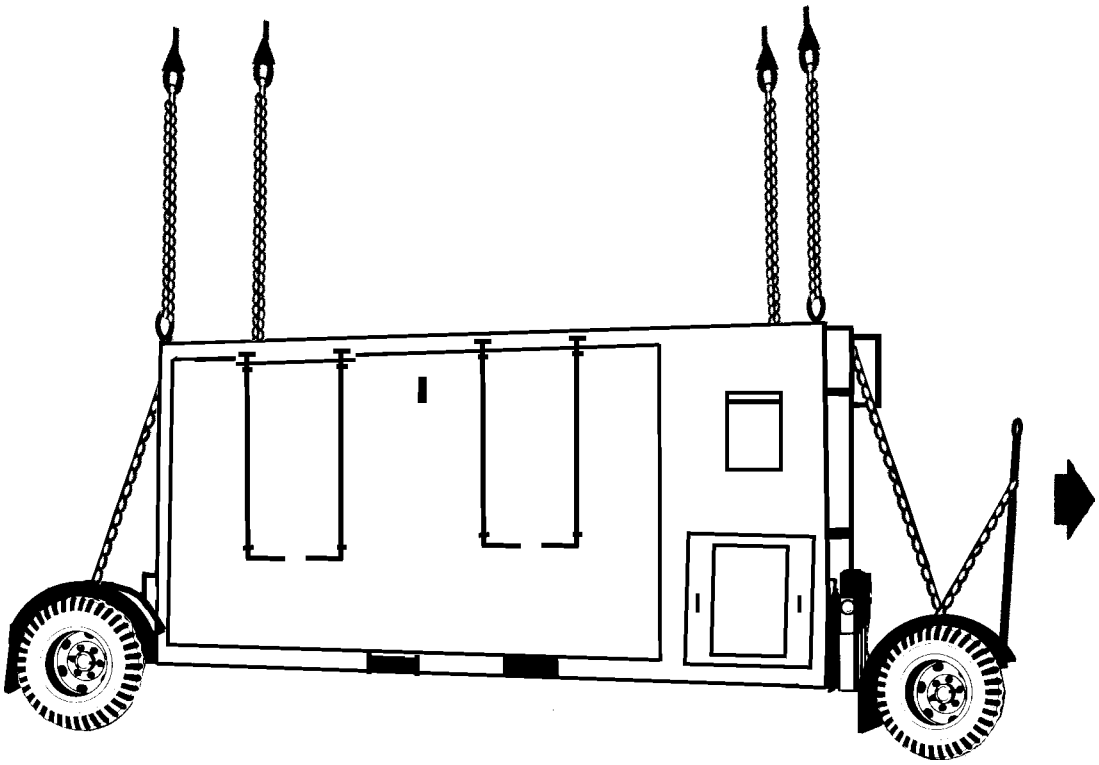

RIGGING STEPS

1. Connect 2 sling legs to apex fitting number 1. Position the apex fitting on the roof of the shelter.

2. Loop the chain end of the sling legs through their respective lift provisions located on the top front corners of the shelter. Place the correct link from Table 3-18 in the grab hook.

3. Connect 2 sling legs to apex fitting number 2. Position the apex fitting on the roof of the shelter.

4. Loop the chain end of the sling legs through their respective lift provisions located on the top rear corners of the shelter. Place the correct link from Table 3-18 in the grab hook.

5. Secure all excess chain with tape or Type III nylon cord.

6. Cluster and tie or tape (breakaway technique) the sling legs in each sling set together to prevent entanglement during hookup and lift-off.

Figure 3-18. Assault Command Post With High Mobility Wheel Set

3-20. Containerized Kitchen Mounted on the Containerized Kitchen Trailer

a. Applicability. The following item in Table 3-19 is certified for the helicopter(s) listed in the following table by the US Army Soldier Systems Center:

Table 3-19. Containerized Kitchen Mounted on the Containerized Kitchen Trailer

NOMENCLATURE	MAX RANGE (POUNDS)	SLING SET	LINK COUNT FRONT/ REAR	TYPE OF AIRCRAFT	RECOMMENDED AIRSPEED (KNOTS)
Containerized Kitchen on Containerized Kitchen Trailer	18,900-20,840	25K	3/50	CH-47	120

b. Materials. The following materials are required to rig this load:

(1) Sling set (25,000-pound capacity) with one additional apex fitting.

(2) Chain length, part number 38850-00053-102, from a 25,000-pound capacity sling set (8 each).

(3) Coupling link, part number 664241, from a 25,000-pound capacity sling set.

(4) Tape, adhesive, pressure-sensitive, 2-inch wide roll.

(5) Cord, nylon, Type III, 550-pound breaking strength.

(6) Webbing, cotton, 1/4-inch, 80-pound breaking strength.

c. Personnel. Two persons can prepare and rig this load in 10 minutes.

d. Procedures. The following procedures apply to this load:

(1) Preparation. Prepare the load using the following steps:

(a) Secure all loose chains, hoses, and cables to the trailer drawbar with tape or Type III nylon cord.

(b) Secure all lids, doors, and caps with tape or Type III nylon cord.

(c) Ensure the front stabilizer legs are extended and in the down position and the rear stabilizer legs are in the up and stowed position.

(d) Lower the tongue support leg so the lunette is lower than the rear of the trailer.

(2) Rigging. Rig the load according to the steps in Figure 3-19.

(3) Hookup. The hookup teams stand on the trailer roof. The static wand person discharges the static electricity with the static wand. The forward hookup person places apex fitting 1 onto the forward cargo hook. The aft hookup person places apex fitting 2 onto the aft cargo hook. The hookup team then carefully dismounts the trailer and remains close to the load as the helicopter removes slack from the sling legs. When successful hookup is assured, the hookup team quickly exits the area underneath the helicopter to the designated rendezvous point.

(4) Derigging. Derigging is the reverse of the preparation and rigging procedures in steps d (1) and d (2).

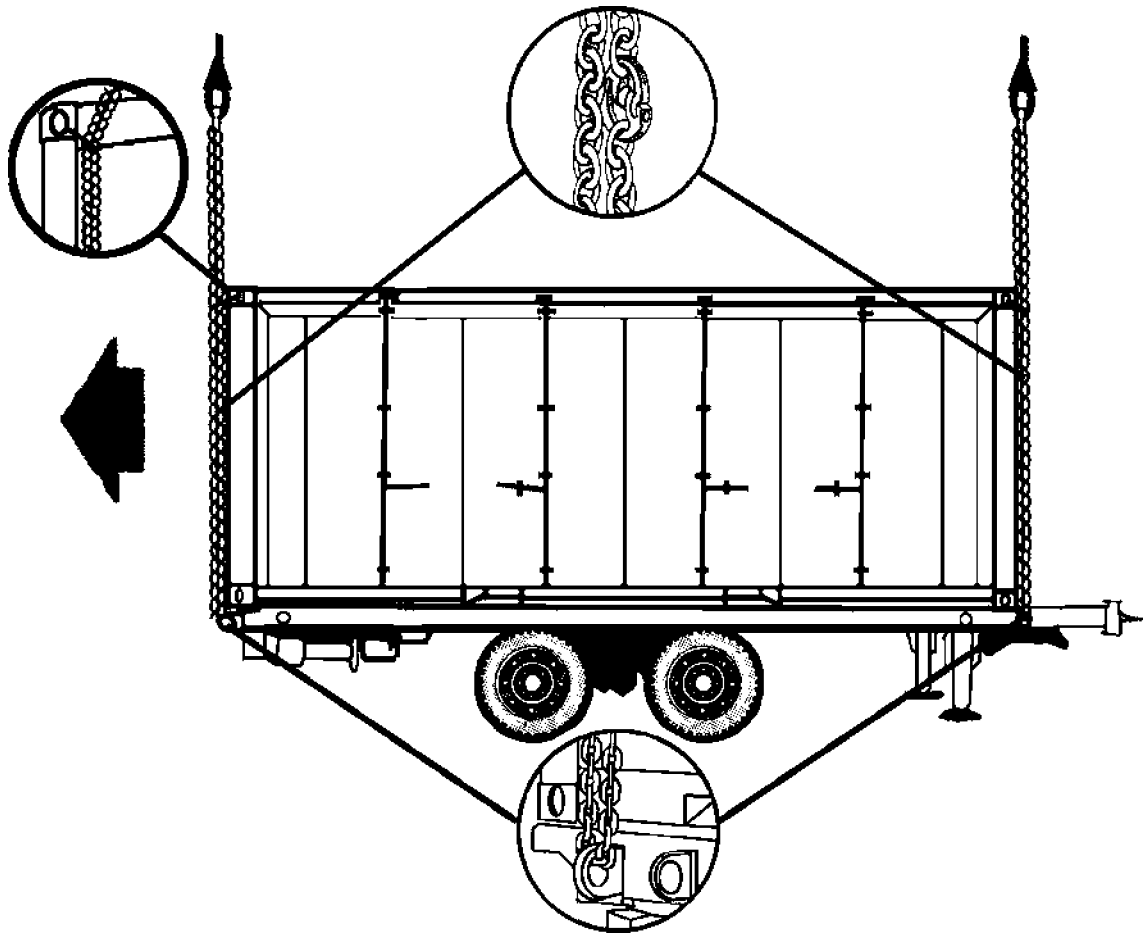

RIGGING STEPS

1. Connect 2 sling legs to apex fitting number 1. Attach two extra chain lengths to each existing chain on each sling leg using coupling links (for 25,000-pound capacity sling sets only). Position the apex fitting on top of the aft end of the trailer.

2. Loop the chain end of the sling legs through their respective lift provisions located on the frame of the trailer. Place the correct link from Table 3-19in the grab hook.

3. Connect 2 sling legs to apex fitting number 2. Attach two extra chain lengths to each existing chain on each sling leg using coupling links (for 25,000-pound capacity sling sets only). Position the apex fitting on top of the front (lunette end) of the trailer.

4. Loop the chain end of the sling legs through their respective lift provisions located on the frame of the trailer. Place the correct link from Table 3-19 in the grab hook.

5. Secure all excess chain with tape or Type III nylon cord.

6. Cluster and tie or tape (breakaway technique) the sling legs in each sling set together to prevent entanglement during hookup and lift-off. Safety tie each chain to the respective ISO provision with Type I 1/4-inch cotton webbing.

Figure 3-19. Containerized Kitchen Mounted on the Containerized Kitchen Trailer

CHAPTER 4

CERTIFIED DUAL-POINT RIGGING PROCEDURES FOR TRAILERS WITH MOUNTED GENERATORS

4-1. INTRODUCTION

This chapter contains rigging procedures for dual-point trailers with mounted generators that have been certified for sling load. Each rigging procedure is found in a paragraph that includes a description of the load, materials required for rigging, and steps to complete the procedure. An applicability paragraph is also a part of each paragraph and identifies the certified loads. The certified dual-point rigging procedures for trailers with mounted generators are in this section. Paragraphs 4-2 through 4-6 give detailed instructions for rigging loads.

NOTE: Reach Pendants may be used on dual point loads. Place a Reach Pendant on each apex fitting. A static discharge person is not required when using a Reach Pendant.

4-2. M116A2 Trailer-Mounted Power Units, Generators, and Power Plants

a. Applicability. The following items in Table 4-1 are certified for the helicopter(s) listed in the following table by the US Army Soldier Systems Center:

Table 4-1. M116A2 Trailer-Mounted Power Units, Generators, and Power Plants

NOMENCLATURE	MAX WEIGHT (POUNDS)	SLING SET	LINK COUNT FRONT/ REAR	TYPE OF AIRCRAFT	RECOMMENDED AIRSPEED (KNOTS)
PU-751/M, 5kW, Generator Variants: LOS V1/V2/V3/V4 Planning Trailer Radio Access Trailer	3,000	10K	3/40	CH-47	75
PU-753/M, 10kW, Generator Variants: NC OPS Trailer SCC TECH Trailer NC MGMT Trailer LEN MGMT Trailer LEN OPS Trailer SEN V1 Trailer SEN V2 Trailer Maintenance #1 Trailer AN/TSQ-182	3,000	10K	3/40	CH-47	75

b. Materials. The following materials are required to rig this load:

(1) Sling set (10,000-pound capacity) with one additional apex fitting.

(2) Tape, adhesive, pressure-sensitive, 2-inch wide roll.

(3) Cord, nylon, Type III, 550-pound breaking strength.

(4) Webbing, cotton, 1/4-inch, 80-pound breaking strength.

c. Personnel. Two persons can prepare and rig this load in 15 minutes.

d. Procedures. The following procedures apply to this load:

(1) Preparation. Prepare the load using the following steps:

(a) Secure all loose chains, hoses, and cables to the trailer drawbar with Type III nylon cord.

(b) Secure any lids, caps, or loose items with tape or Type III nylon cord.

(c) Partially retract all landing legs and secure in position with Type III nylon cord.

(d) Retract the lunette and secure in position with Type III nylon cord.

(e) Ensure the parking brake is set.

(2) Rigging. Rig the load according to the steps in Figure 4-1.

(3) Hookup. The hookup teams stand on the trailer fenders. The static wand person discharges the static electricity with the static wand. The forward hookup person places apex fitting 1 onto the forward cargo hook. The aft hookup person places apex fitting 2 onto the aft cargo hook. The hookup team then carefully dismounts the trailer and remains close to the load as the helicopter removes slack from the sling legs. When successful hookup is assured, the hookup team quickly exits the area underneath the helicopter to the designated rendezvous point.

(4) Derigging. Derigging is the reverse of the preparation and rigging procedures in steps d (1) and d (2).

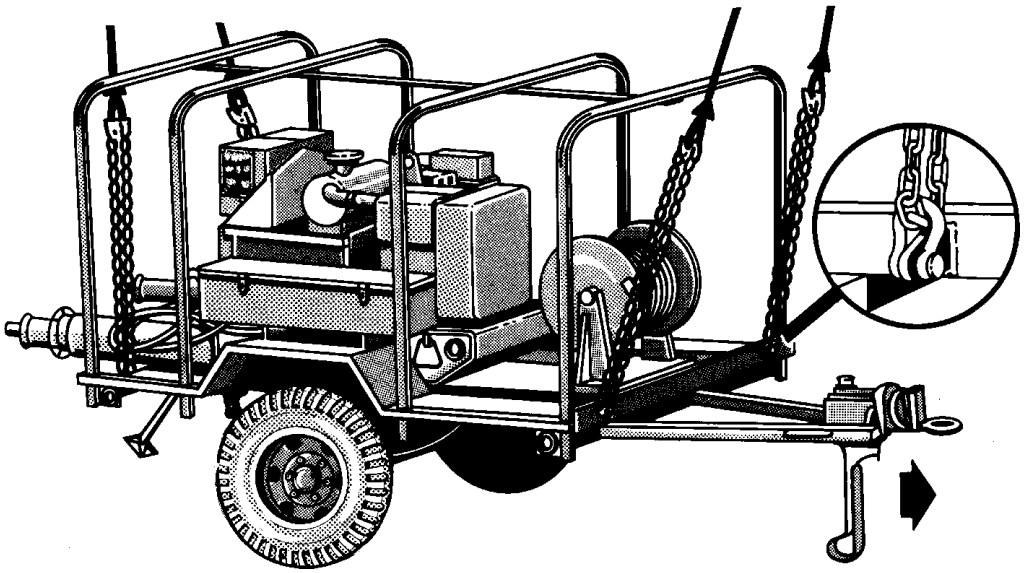

RIGGING STEPS

1. Connect 2 sling legs to apex fitting number 1. Position the apex fitting on the drawbar.

2. Loop the chain end of the sling legs through their respective lift provisions located on the front of the trailer. Place the correct link from Table 4-1 in the grab hook.

3. Connect 2 sling legs to apex fitting number 2. Position the apex fitting behind the generator.

4. Loop the chain end of the sling legs through their respective lift provisions. Place the correct link from Table 4-1 in the grab hook.

5. Secure all excess chain with tape or Type III nylon cord.

6. Cluster and tie or tape (breakaway technique) the front sling legs on the top front of the generator set. Tape the sling legs to the front bow to prevent entanglement with the cable reel handle.

7. Cluster and tie or tape (breakaway technique) the rear sling legs on the top rear of the generator set.

Figure 4-1. M116A2 Trailer-Mounted Power Units, Generators, and Power Plants

4-3. M353 Trailer Chassis With Mounted Generators

a. Applicability. The following items in Table 4-2 are certified for the helicopter(s) listed in the following table by the US Army Soldier Systems Center:

Table 4-2. M353 Trailer Chassis With Mounted Generators

NOMENCLATURE	MAX WEIGHT (POUNDS)	SLING SET	LINK COUNT FRONT/ REAR	TYPE OF AIRCRAFT	RECOMMENDED AIRSPEED (KNOTS)
M353 Trailer Chassis	2,720	15K	10/15	CH-53	120
MEP-005-A	6,220	15K	10/15	CH-53	120
MEP-006-A	7,720	15K	10/15	CH-53	120
MEP-114-A	6,220	15K	10/15	CH-53	120
MEP-115-A	6,320	15K	10/15	CH-53	120

b. Materials. The following materials are required to rig this load:

(1) Sling set (15,000-pound capacity) with one additional web ring.

(2) Tape, adhesive, pressure-sensitive, 2-inch wide roll.

(3) Cord, nylon, Type III, 550-pound breaking strength.

(4) Webbing, cotton, 1/4-inch, 80-pound breaking strength.

c. Personnel. Two persons can prepare and rig this load in 10 minutes.

d. Procedures. The following procedures apply to this load:

(1) Preparation. Prepare the load using the following steps:

(a) Secure all loose chains, hoses, and cables to the trailer drawbar with Type III nylon cord.

(b) Secure any lids, caps, or loose items with tape or Type III nylon cord.

(c) Ensure the parking brake is set.

(2) Rigging. Rig the load according to the steps in Figure 4-2.

(3) Hookup. The hookup teams stand on the trailer. The static wand person discharges the static electricity with the static wand. The forward hookup person places apex fitting 1 onto the forward cargo hook. The aft hookup person places apex fitting 2 onto the aft cargo hook. The hookup team then carefully dismounts the trailer and remains close to the load as the helicopter removes slack from the sling legs. When successful hookup is assured, the hookup team quickly exits the area underneath the helicopter to the designated rendezvous point.

(4) Derigging. Derigging is the reverse of the preparation and rigging procedures in steps d (1) and d (2).

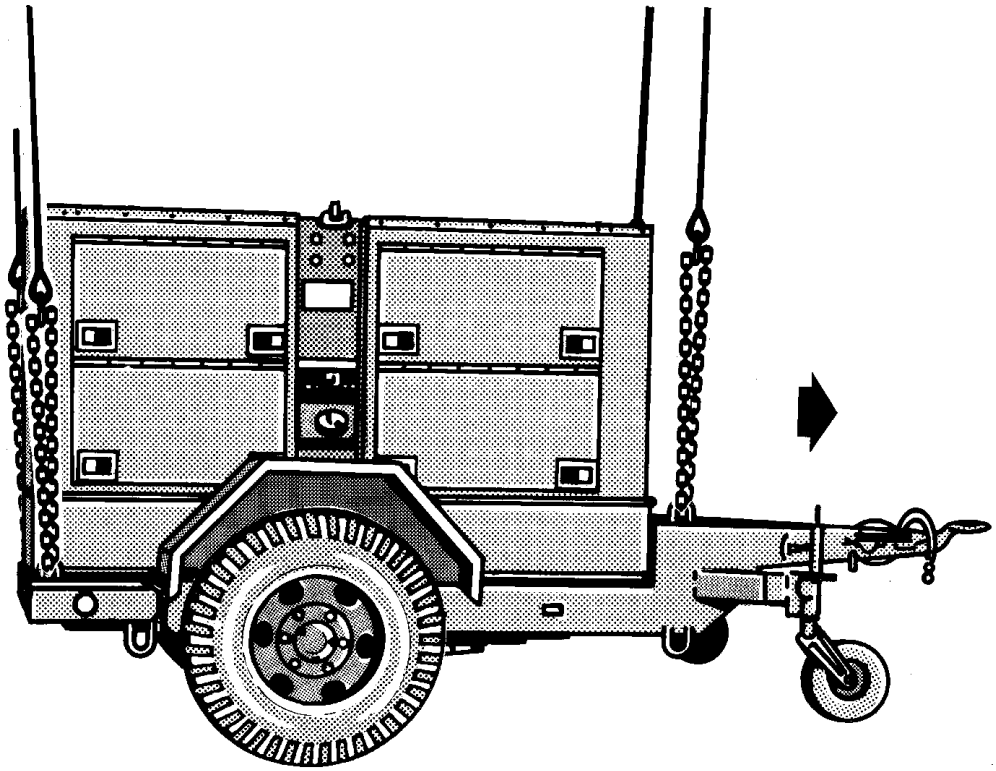

RIGGING STEPS

1. Connect 2 sling legs to web ring number 1. Position the web ring on top of the front of the trailer.

2. Loop the chain end of the sling legs through their respective lift provisions located on the front of the trailer. Place the correct link from Table 4-2 in the grab hook.

3. Connect 2 sling legs to web ring number 2. Position the web ring on top of the aft end of the trailer.

4. Loop the chain end of the sling legs through their respective lift provisions. Place the correct link from Table 4-2 in the grab hook.

5. Secure all excess chain with tape or Type III nylon cord.

6. Cluster and tie or tape (breakaway technique) the legs of each sling set on top of the generator set to prevent entanglement during hook-up and lift off.

Figure 4-2. M353 Trailer Chassis With Mounted Generators

4-4. M200A1 Trailer-Mounted Power Units, Generators, and Power Plants

a. Applicability. The following items in Table 4-3 are certified for the helicopter(s) listed in the following table by the US Army Soldier Systems Center:

Table 4-3. M200A1 Trailer-Mounted Power Units, Generators, and Power Plants

NOMENCLATURE	MAX WEIGHT (POUNDS)	SLING SET	LINK COUNT FRONT/ REAR	TYPE OF AIRCRAFT	RECOMMENDED AIRSPEED (KNOTS)
PU-405 A/M Power Unit, 15kW, with acoustic suppression kit (ASK)	6,740	10K	3/10	CH-47	80
PU-406 B/M Power Unit, 30kW, with acoustic suppression kit (ASK)	7,250	10K	3/10	CH-47	80

b. Materials. The following materials are required to rig this load:

(1) Sling set (10,000-pound capacity) with one additional apex fitting.

(2) Tape, adhesive, pressure-sensitive, 2-inch wide roll.

(3) Cord, nylon, Type III, 550-pound breaking strength.

(4) Webbing, cotton, 1/4-inch, 80-pound breaking strength.

(5) Felt sheet, cattle hair, Type IV, 1/2-inch or suitable substitute.

c. Personnel. Two persons can prepare and rig this load in 15 minutes.

d. Procedures. The following procedures apply to this load:

(1) Preparation. Prepare the load using the following steps:

(a) Secure all loose chains, hoses, and cables to the trailer drawbar with Type III nylon cord.

(b) Secure any lids, caps, or loose items with tape or Type III nylon cord.

(c) Lower the lunette as far as possible by adjusting the landing legs

(d) Ensure the hand brakes are set.

(2) Rigging. Rig the load according to the steps in Figure 4-3.

(3) Hookup. The hookup teams stand on the trailer fenders. The static wand person discharges the static electricity with the static wand. The forward hookup person places apex fitting 1 onto the forward cargo hook. The aft hookup person places apex fitting 2 onto the aft cargo hook. The hookup team then carefully dismounts the trailer and remains close to the load as the helicopter removes slack from the sling legs. When successful hookup is assured, the hookup team quickly exits the area underneath the helicopter to the designated rendezvous point.

(4) Derigging. Derigging is the reverse of the preparation and rigging procedures in steps d (1) and d (2).

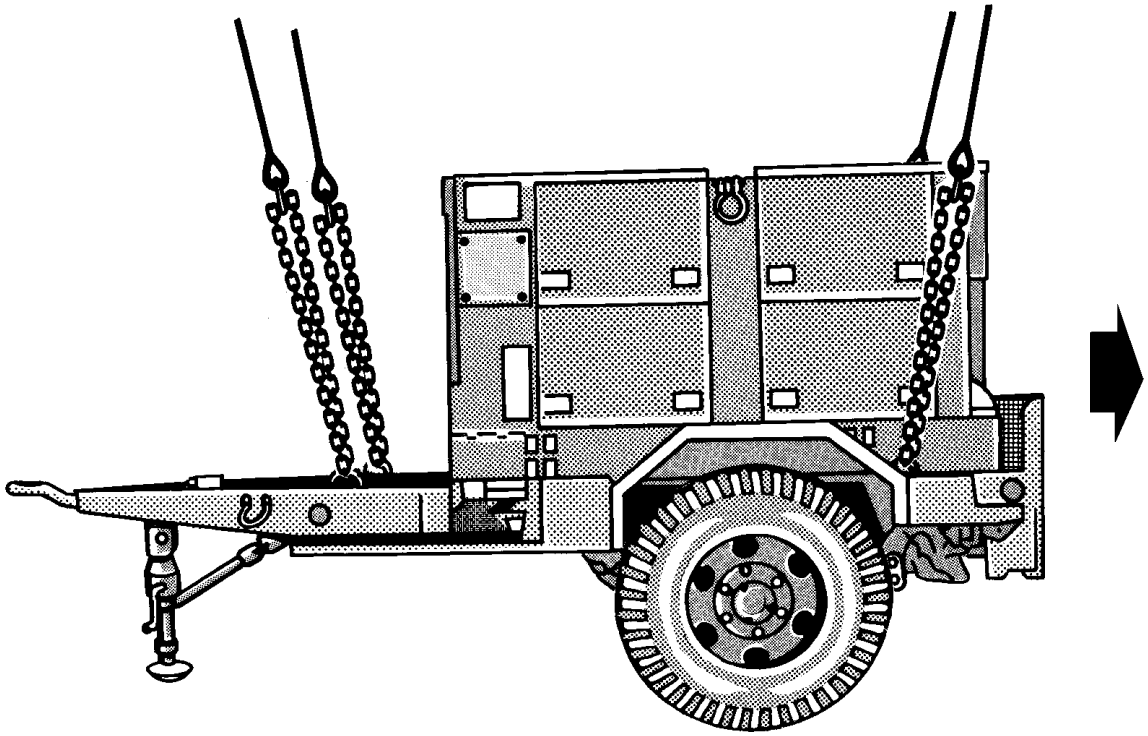

RIGGING STEPS

1. Connect 2 sling legs to apex fitting number 1. Position the apex fitting on top of the front of the trailer.

2. Loop the chain end of the sling legs through their respective lift provisions located on the front of the trailer. Place the correct link from Table 4-3 in the grab hook.

3. Connect 2 sling legs to apex fitting number 2. Position the apex fitting on top of the aft end of the trailer.

4. Loop the chain end of the sling legs through their respective lift provisions. Place the correct link from Table 4-3 in the grab hook.

5. Secure all excess chain with tape or Type III nylon cord.

6. Cluster and tie or tape (breakaway technique) the legs of each sling set on top of the generator set to prevent entanglement during hook-up and lift off.

Figure 4-3. M200A1 Trailer-Mounted Power Units, Generators, and Power Plants

4-5. High Mobility Trailer with AN/MJQ-35A Power Unit

a. Applicability. The following item in Table 4-4 is certified for the helicopter(s) listed in the following table by the US Army Soldier Systems Center:

Table 4-4. High Mobility Trailer with AN/MJQ-35A Power Unit

NOMENCLATURE	MAX WEIGHT (POUNDS)	SLING SET	LINK COUNT FRONT/ REAR	TYPE OF AIRCRAFT	RECOMMENDED AIRSPEED (KNOTS)
AN/MJQ-35A, 5kW, 60Hz, Power Plant	3,540	10K	20/3	CH-47	120

b. Materials. The following materials are required to rig this load:

(1) Sling set (10,000-pound capacity) with one additional apex fitting.

(2) Tape, adhesive, pressure-sensitive, 2-inch wide roll.

(3) Cord, nylon, Type III, 550-pound breaking strength.

(4) Webbing, cotton, 1/4-inch, 80-pound breaking strength.

(5) Felt sheet, cattle hair, Type IV, 1/2-inch or suitable substitute.

c. Personnel. Two persons can prepare and rig this load in 10 minutes.

d. Procedures. The following procedures apply to this load:

(1) Preparation. Prepare the load using the following steps:

(a) Secure all loose chains, hoses, and cables to the trailer drawbar with Type III nylon cord.

(b) Secure any lids, caps, or loose items with tape or Type III nylon cord.

(c) Remove the rear stabilizer legs from their stowage location and install them with the lower support section fully retracted.

(d) Lower the lunette as close as possible to the ground.

(e) Ensure the hand brakes are set.

(2) Rigging. Rig the load according to the steps in Figure 4-4.

(3) Hookup. The hookup teams stand on the trailer bed. The static wand person discharges the static electricity with the static wand. The forward hookup person places apex fitting 1 onto the forward cargo hook. The aft hookup person places apex fitting 2 onto the aft cargo hook. The hookup team then carefully dismounts the trailer and remains close to the load as the helicopter removes slack from the sling legs. When successful hookup is assured, the hookup team quickly exits the area underneath the helicopter to the designated rendezvous point.

(4) Derigging. Derigging is the reverse of the preparation and rigging procedures in steps d (1) and d (2).

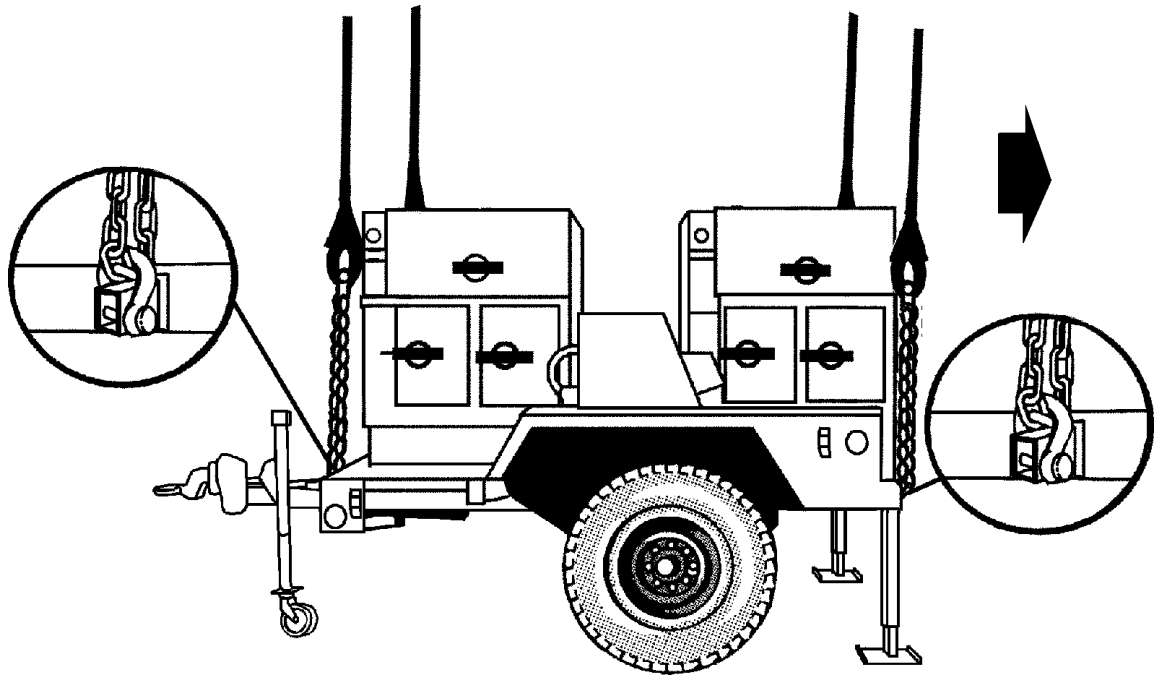

RIGGING STEPS

1. Connect 2 sling legs to apex fitting number 1. Position the apex fitting on top of the front of the trailer.

2. Loop the chain end of the sling legs through their respective lift provisions located on the front of the trailer. Place the correct link from Table 4-4 in the grab hook.

3. Connect 2 sling legs to apex fitting number 2. Position the apex fitting on top of the aft end of the trailer.

4. Loop the chain end of the sling legs through their respective lift provisions. Place the correct link from Table 4-4 in the grab hook.

5. Secure all excess chain with tape or Type III nylon cord.

6. Pad the slings or chains where they may contact the generator. Secure the padding with tape.

7. Cluster and tie or tape (breakaway technique) the legs of each sling set on top of the generator set to prevent entanglement during hook-up and lift off.

Figure 4-4. High Mobility Trailer with AN/MJQ-35A Power Unit

4-6. Aviation Ground Power Unit

a. Applicability. The following item in Table 4-5 is certified for the helicopter(s) listed in the following table by the US Army Soldier Systems Center:

Table 4-5. Aviation Ground Power Unit

NOMENCLATURE	MAX WEIGHT (POUNDS)	SLING SET	LINK COUNT FRONT/ REAR	TYPE OF AIRCRAFT	RECOMMENDED AIRSPEED (KNOTS)
Aviation Ground Power Unit	4,190	10K	3/3	CH-47	100

b. Materials. The following materials are required to rig this load:

(1) Sling set (10,000-pound capacity) with one additional apex fitting.

(2) Tape, adhesive, pressure-sensitive, 2-inch wide roll.

(3) Cord, nylon, Type III, 550-pound breaking strength.

(4) Webbing, cotton, 1/4-inch, 80-pound breaking strength.

(5) Strap, cargo, tie-down, CGU-1/B (4 each).

(6) Webbing, nylon, tubular, 1/2-inch, 1000-pound breaking strength.

c. Personnel. Two persons can prepare and rig this load in 10 minutes.

d. Procedures. The following procedures apply to this load:

(1) Preparation. Prepare the load using the following steps:

(a) Stow and secure the tow bar in the raised position with 1/2-inch tubular nylon webbing.

(b) Secure all loose equipment inside the unit with Type III nylon cord. Close all doors and secure the handles with tape.

(c) Route a CGU-1/B tie-down strap horizontally around the unit. Position the strap 16 inches down from the top of the unit. Repeat this procedure with a second strap positioned 8 inches above the first strap.

(d) Route a strap through the forklift provision and vetically around the unit. Repeat this procedure using the second forklift provision.

(e) Tape or remove the exhaust cover to prevent damage during flight.

(f) Ensure the hand brakes are set.

(g) Ensure the fuel tank is not more than 3/4 full. Inspect fuel tank cap, oil filler caps, and battery caps to ensure they are installed properly and are secure.

(2) Rigging. Rig the load according to the steps in Figure 4-5.

(3) Hookup. The hookup teams stand on top of the unit. The static wand person discharges the static electricity with the static wand. The forward hookup person places apex fitting 1 onto the forward cargo hook. The aft hookup person places apex fitting 2 onto the aft cargo hook. The hookup team then carefully dismounts the trailer and remains close to the load as the helicopter removes slack from the sling legs. When successful hookup is assured, the hookup team quickly exits the area underneath the helicopter to the designated rendezvous point.

(4) Derigging. Derigging is the reverse of the preparation and rigging procedures in steps d (1) and d (2).

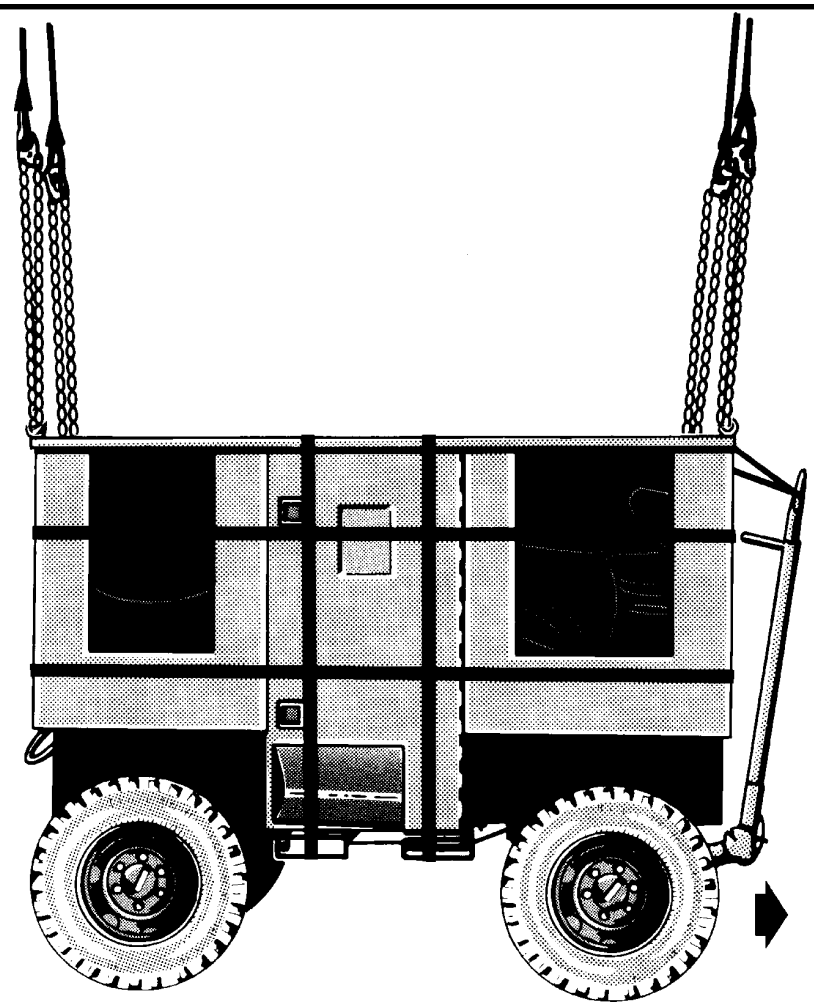

RIGGING STEPS

1. Connect 2 sling legs to apex fitting number 1. Position the apex fitting on top of the tongue end of the unit.

2. Loop the chain end of the sling legs through their respective lift provisions located on the front of the trailer. Place the correct link from Table 4-5 in the grab hook.

3. Connect 2 sling legs to apex fitting number 2. Position the apex fitting on top of the aft end of the unit.

4. Loop the chain end of the sling legs through their respective lift provisions. Place the correct link from Table 4-5 in the grab hook.

5. Cluster and tie or tape (breakaway technique) the legs of each sling set on top of the generator set to prevent entanglement during hook-up and lift off.

Figure 4-5. Aviation Ground Power Unit

CHAPTER 5

CERTIFIED DUAL-POINT RIGGING PROCEDURES FOR TANDEM LOADS

5-1. INTRODUCTION

This chapter contains rigging procedures for dual-point tandem loads that have been certified for sling load. Each rigging procedure is found in a paragraph that includes a description of the load, materials required for rigging, and steps to complete the procedure. An applicability paragraph is also a part of each paragraph and identifies the certified loads. The certified dual-point rigging procedures for tandem loads are in this section. Paragraphs 5-2 through 5-20 give detailed instructions for rigging loads.

NOTE: Reach Pendants may be used on dual point loads. Place a Reach Pendant on each apex fitting. A static discharge person is not required when using a Reach Pendant.

5-2. M998/M1038 Truck, Utility, 1-1/4 Ton (HMMWV) with M101A1/A2 Trailer, Cargo

a. Applicability. The following items in Table 5-1 are certified for the helicopter(s) listed in the following table by the US Army Soldier Systems Center:

NOTE:

Field commanders should note that minor bending of the front wall of the M101A1/M101A2 trailer may occur as a result of sling loading due to the compression from the slings. The possibility of bending does not pose a safety threat to flight or ground personnel and will not affect the operation of the trailer.

Table 5-1. M998/M1038 Truck, Utility, 1-1/4 Ton with M101A1/A2 Trailer, Cargo

NOMENCLATURE	MAX WEIGHT (POUNDS)	SLING SET	LINK COUNT FRONT/ REAR	TYPE OF AIRCRAFT	RECOMMENDED AIRSPEED (KNOTS)
Truck, 1-1/4 Ton, HMMWV, M998, Empty	5,200	10K	76/3	CH-47	100
Truck, 1-1/4 Ton, HMMWV, M998, Loaded	7,700	10K	76/3	CH-47	110
Truck, 1-1/4 Ton, HMMWV, M1038, Empty	5,327	10K	76/3	CH-47	100
Truck, 1-1/4 Ton, HMMWV, M1038, Loaded	7,700	10K	76/3	CH-47	110
Trailer, Cargo, M101A1/M101A2, Empty	1,280	10K	59/36	CH-47	100
Trailer, Cargo, M101A1/M101A2, Loaded	2,780	10K	59/36	CH-47	110

NOTES:
1. The maximum certified combined load weight is 10,480 pounds.
2. The recommended airspeed for combined loads weighing 6,607 pounds or less is 100 knots.
3. The recommended airspeed for combined loads weighing between 6,607 and 10,480 pounds or less is 110 knots.

b. Materials. The following materials are required to rig this load:

(1) Sling set (10,000-pound capacity) (2 each).

(2) Tape, adhesive, pressure-sensitive, 2-inch wide roll.

(3) Cord, nylon, Type III, 550-pound breaking strength.

(4) Webbing, cotton, 1/4-inch, 80-pound breaking strenth.

(5) Strap, cargo, tie-down, CGU-1/B (2 each, or more as required to secure cargo).

(6) Reach Pendant, 11K or 25K, OPTIONAL EQUIPMENT.

c. Personnel. Two persons can prepare and rig the M998/M1038 HMMWVs in 15 minutes. Two persons can prepare and rig the M101A1/M101A2 trailer in 10 minutes.

d. Procedures. Attach the trailer to the truck by placing the lunette on the pintle hook and securing the latch. Secure the safety chains, cables, and hoses to the trailer. Position the vehicle on level ground so both the truck and trailer are in a straight line. The following procedures apply to this load:

(1) Preparation. Prepare the load using the following steps:

(a) Fold mirrors forward in front of the windshield and tie together with Type III nylon cord. Remove the doors and secure to the seats with Type III nylon cord.

(b) Secure all equipment and cargo inside the truck with tie-down straps, tape, or Type III nylon cord.

(c) Ensure the fuel tank is not over 3/4 full. Inspect fuel tank cap, oil filler cap, and battery caps for proper installation.

(d) Engage the vehicle parking brake and put the transmission in neutral.

(e) Ensure the front wheels are pointed straight ahead. Tie down the steering wheel, using the securing device attached under the dashboard.

(f) Secure all equipment and cargo inside the trailer with tie-down straps, tape, or Type III nylon cord.

(g) Place the tailgate in the open position.

(h) Remove the tarp and front rack and place it in the bed of the trailer. Place the accompanying load on top of the front rack. Secure the accompanying load to the trailer using tie-down straps. Route the straps diagonally across the load from the tailgate hinge to the front lifting shackles.

(i) Ensure the parking brake is set.

(j) Attach the hook portion of a CGU-1/B tie-down strap down to the left front lift provision on the trailer. Connect the ratchet to the left inside tie-down provision located near the pintle.

(k) Repeat the above procedure on the right side of the load.

(l) Tighten both CGU-1/B tie-down straps at the same time. Safety the ratchet handles in the closed position with tape.

(2) Rigging. Rig the load according to the steps in Figure 5-1.

(3) Hookup. Two hookup teams are required for this load. The static wand person stands in the bed of the HMMWV and discharges the static electricity with the static wand. The forward hookup person stands in the bed of the HMMWV and places apex fitting 1 onto the forward cargo hook. The aft hookup person stands in the bed of the trailer and places apex fitting 2 onto the aft cargo hook. The hookup team then carefully dismounts the trailer and remains close to the load as the helicopter removes slack from the sling legs. When successful hookup is assured, the hookup team quickly exits the area underneath the helicopter to the designated rendezvous

point.

(4) Derigging. Derigging is the reverse of the preparation and rigging procedures in steps d (1) and d (2).

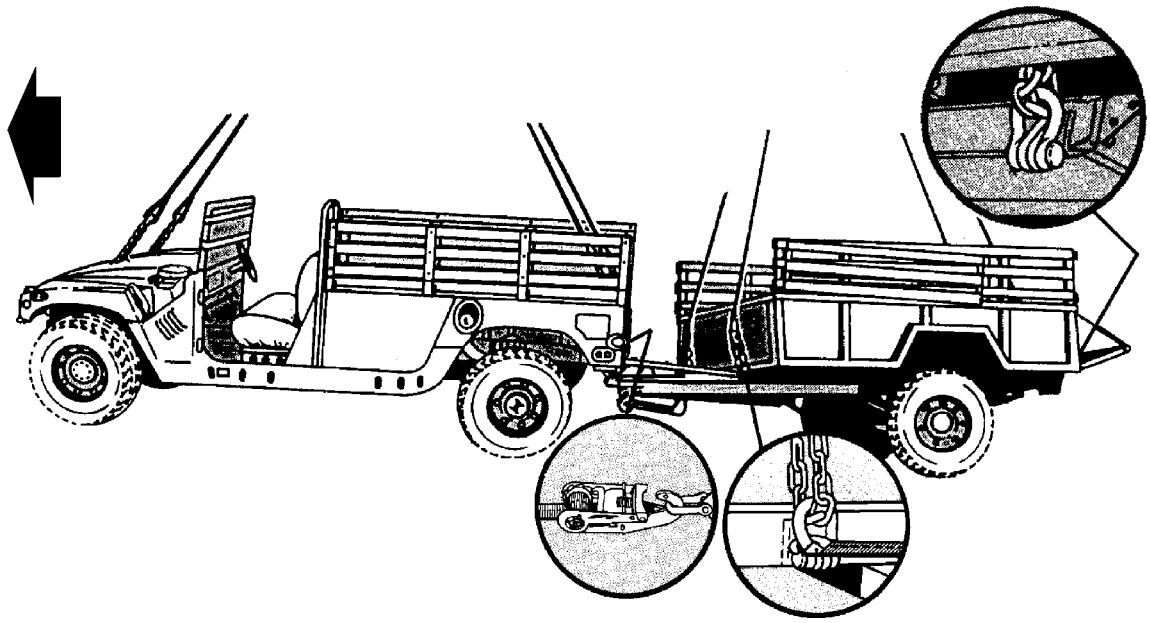

RIGGING STEPS

NOTE: The following rigging procedures should result in the load assuming the following characteristics during lift-off.

EMPTY: HMMWV should be 1-2 degrees nose down and the trailer should be level.

LOADED: HMMWV and trailer should be level.

1. Position the apex fitting of sling set 1 in the bed of the vehicle. Route outer sling legs 1and 2 to the front of the vehicle and inner sling legs 3 and 4 to the rear. Sling legs 1 and 3 must be on the left side of the load.

2. Loop the chain end of sling leg 1 through the left front lift provision that protrudes through the hood. Place the correct link from Table 5-1 in the grab hook. Repeat with sling leg 2 and the right front lift provision. Secure excess chain with tape or Type III nylon cord.

3. Route the chain end of sling leg 3 through the eyelet opening in the upper left corner of the tailgate. Loop the chain end through the left lift provision on the bumper and thread back through the eyelet opening in the tailgate. Place the correct link from Table 5-1 in the grab hook. Repeat with sling leg 4 and the right rear lift provision.

4. Cluster and tie or tape (breakaway technique) all sling legs together on top of the vehicle to prevent entanglement during hookup and lift-off.

Figure 5-1. M998/M1038 Truck, Utility, 1-1/4 Ton (HMMWV) with M101A1/A2 Trailer, Cargo

RIGGING STEPS	
5. Position apex fitting of sling set 2 in the trailer bed. Route outer sling legs 1and 2 to the front of the trailer and inner sling legs 3 and 4 to the rear. Route the rear chains through the opening between the tailgate and the trailer bed inside of the tailgate hinges. Sling legs 1 and 3 must be on the left side of the load. **6.** Loop the chain end of sling leg 1 through the left front lift provision located on the front of the trailer. Place the correct link from Table 5-1 in the grab hook. Repeat with sling leg 2 through the right front lift provision. Secure excess chain with tape or Type III nylon cord. **7.** Route the chain end of sling leg 3 through the left rear lift provision. Place the correct link from Table 5-1 in the grab hook. Repeat with sling leg 4 through the right rear lift provision. Secure excess chain with tape or Type III nylon cord. **8.** Cluster and tie or tape (breakaway technique) all sling legs together on top of the trailer to prevent entanglement during hookup and lift-off.	

Figure 5-1. M998/M1038 Truck, Utility, 1-1/4 Ton (HMMWV) with M101A1/A2 Trailer, Cargo (continued)

5-3. M1037 Shelter Carrier (HMMWV) with M101A2 Trailer, Cargo

a. Applicability. The following items in Table 5-2 are certified for the helicopter(s) listed in the following table by the US Army Soldier Systems Center:

NOTE:

Field commanders should note that minor bending of the front wall of the M101A2 trailer may occur as a result of sling loading due to the compression from the slings. The possibility of bending does not pose a safety threat to flight or ground personnel and will not affect the operation of the trailer.

Table 5-2. M1037 Shelter Carrier with M101A2 Trailer, Cargo

NOMENCLATURE	MAX WEIGHT (POUNDS)	SLING SET	LINK COUNT FRONT/ REAR	TYPE OF AIRCRAFT	RECOMMENDED AIRSPEED (KNOTS)
M1037 NC Support Vehicle	8,227	10K	80/30	CH-47	110
M1037 LEN Cable Vehicle	8,148	10K	80/30	CH-47	110
M1037 with SCC Command V1 S-250 Shelter	8,346	10K	80/30	CH-47	110
M1037 with SCC Command V2 S-250 Shelter	8,346	10K	80/30	CH-47	110
M1037 with Management 2 S-250 Shelter	7,905	10K	80/30	CH-47	110
NC Support M101A2 Trailer	2,643	10K	90/70	CH-47	110
LEN Cable Vehicle M101A2 Trailer	2,796	10K	90/70	CH-47	110
SCC Command V1 M101A2 Trailer	1,981	10K	90/70	CH-47	110
SCC Command V2 M101A2 Trailer	1,430	10K	90/70	CH-47	110
Management 2 M101A2 Trailer	1,430	10K	90/70	CH-47	110

NOTE: The NC support vehicle and the LEN cable vehicle have an enclosed canvas cargo bed, not the S-250 shelter.

b. Materials. The following materials are required to rig this load:

(1) Sling set (10,000-pound capacity) (2 each).

(a) Chain length, part number 38850-00053-101, from a 10,000-pound capacity sling set (8 each).

(b) Coupling link, part number 577-0615, from a 10,000-pound sling set (8 each).

(2) Tape, adhesive, pressure-sensitive, 2-inch wide roll.

(3) Cord, nylon, Type III, 550-pound breaking strength.

(4) Webbing, cotton, 1/4-inch, 80-pound breaking strenth.

(5) Strap, cargo, tie-down, CGU-1/B (2 each, or more as required to secure cargo).

(6) Felt sheet, cattle hair, Type IV, 1/2-inch or suitable substitute.

c. Personnel. Two persons can prepare and rig the M1037 HMMWV in 15 minutes. Two persons can prepare and rig the M101A2 trailer in 10 minutes.

d. Procedures. Attach the trailer to the truck by placing the lunette on the pintle hook and securing the latch. Secure the safety chains, cables, and hoses to the trailer. Position the vehicle on level ground so both the truck and trailer are in a straight line. The following procedures apply to this load:

(1) Preparation. Prepare the load using the following steps:

(a) Fold mirrors forward in front of the windshield and tie together with Type III nylon cord. Remove the doors and secure to the seats with Type III nylon cord.

(b) Ensure the shelter is secured to the vehicle using wire rope or tie-down straps. Secure all loose equipment inside the shelter with tape, Type III nylon cord, or tie-down straps. Close and secure the door.

(c) Secure all equipment and cargo inside the truck with tie-down straps, tape, or Type III nylon cord.

(d) Ensure the fuel tank is not over 3/4 full. Inspect the fuel tank cap, oil filler cap, and battery caps for proper installation.

(e) Engage the vehicle parking brake and put the transmission in neutral.

(f) Ensure the front wheels are pointed straight ahead. Tie down the steering wheel, using the securing device attached under the dashboard.

(g) Install the lift provisions on the outer ends of the rear bumper by removing the tiedown provisions located on the front bumper and installing on the outer ends of the rear bumper.

(h) Secure all equipment and cargo inside the trailer with tie-down straps, tape, or Type III nylon cord.

(i) Place the tailgate in the open position.

(j) Remove the tarp and front rack and place it in the bed of the trailer. Place the accompanying load on top of the front rack. Secure the accompanying load to the trailer using tie-down straps. Route the straps diagonally across the load from the tailgate hinge to the front lifting shackles.

(k) Ensure the parking brake is set.

(l) Attach the hook portion of a CGU-1/B tie-down strap down to the left front lift provision on the trailer. Connect the ratchet to the left inside tie-down provision located near the pintle.

(m) Repeat the above procedure on the right side of the load.

(n) Tighten both CGU-1/B tie-down straps at the same time. Secure the excess strap and safety the ratchet handles in the closed position with tape.

(o) Connect one additional chain length to each chain on each sling set with the coupling links.

(2) Rigging. Rig the load according to the steps in Figure 5-2.

(3) Hookup. Two hookup teams are required for this load. The static wand person discharges the static electricity with the static wand. The forward hookup person kneels on top of the shelter and places apex fitting 1 onto the forward cargo hook. The aft hookup person stands in the bed of the trailer and places apex fitting 2 onto the aft cargo hook. The hookup team then carefully dismounts the trailer and remains close to the load as the helicopter removes slack from the sling legs. When successful hookup is assured, the hookup team quickly exits the area underneath the helicopter to the designated rendezvous point.

(4) Derigging. Derigging is the reverse of the preparation and rigging procedures in steps d (1) and d (2).

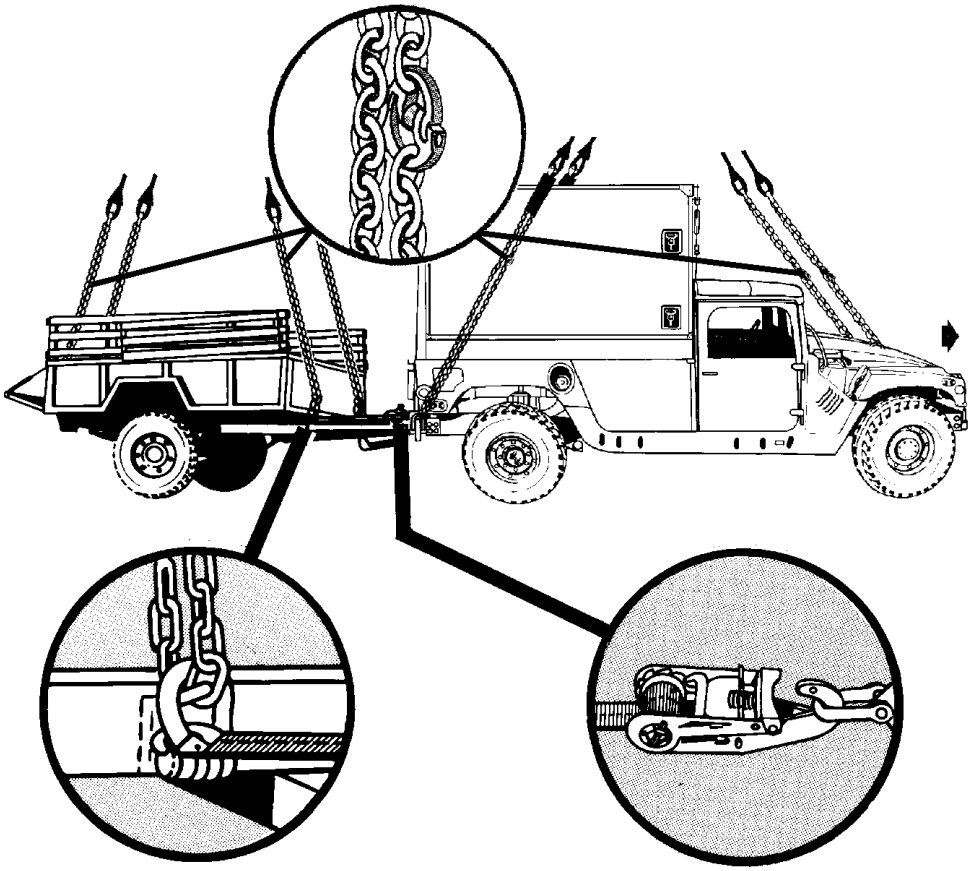

RIGGING STEPS

1. Position the apex fitting of sling set 1 on top of the shelter. Route outer sling legs 1and 2 to the front of the vehicle and inner sling legs 3 and 4 to the rear. Sling legs 1 and 3 must be on the left side of the load.

2. Loop the chain end of sling leg 1 through the left front lift provision that protrudes through the hood. Place the correct link from Table 5-2 in the grab hook. Repeat with sling leg 2 and the right front lift provision. Secure excess chain with tape or Type III nylon cord.

3. Loop the chain end of the sling legs through their respective lift provisions located on the outer ends of the rear bumper. Place the correct link from Table 5-2 in the grab hook. Secure excess chain with tape or Type III nylon cord.

4. Pad the chain where it contacts the shelter sides.

5. Cluster and tie or tape (breakaway technique) all sling legs together on top of the vehicle to prevent entanglement during hookup and lift-off.

Figure 5-2. M1037 Shelter Carrier with M101A2 Trailer, Cargo

RIGGING STEPS	
6. Position the apex fitting of sling set 2 in the trailer bed. Route outer sling legs 1and 2 to the front of the trailer and inner sling legs 3 and 4 to the rear. Route the rear chains through the opening between the tailgate and the trailer bed and inside of the trailer hinges. Sling legs 1 and 3 must be on the left side of the load. **7.** Loop the chain end of sling leg 1 through the left front lift provision located on the front of the trailer. Place the correct link from Table 5-2 in the grab hook. Repeat with sling leg 2 through the right front lift provision. Secure excess chain with tape or Type III nylon cord.	**8.** Route the chain end of sling leg 3 through the left rear lift provision. Place the correct link from Table 5-2 in the grab hook. Repeat with sling leg 4 through the right rear lift provision. Secure excess chain with tape or Type III nylon cord. **9.** Cluster and tie or tape (breakaway technique) all sling legs together on top of the trailer to prevent entanglement during hookup and lift-off.

Figure 5-2. M1037 Shelter Carrier with M101A2 Trailer, Cargo (continued)

5-4. M1037 Shelter Carrier (HMMWV) with S-250/S-250E Shelter and M116A2 Trailer Mounted Generators, PU-751/PU753/PU-620/M

a. Applicability. The following items in Table 5-3 are certified for the helicopter(s) listed in the following table by the US Army Soldier Systems Center:

Table 5-3. M1037 Shelter Carrier with S250/S-250E Shelter and M116A2 Trailer Mounted Generators

NOMENCLATURE	MAX WEIGHT (POUNDS)	SLING SET	LINK COUNT FRONT/ REAR	TYPE OF A/C	RECOMMENDED AIRSPEED (KNOTS)
M1037 with LOS (V1) S-250 Shelter and PU-751/M Generator	M1037-8,246 PU-751-2,772	10K	HMMWV-80/30 PU-751-90/20	CH-47	110
M1037 with LOS (V2) S-250 Shelter and PU-751/M Generator	M1037-7,851 PU-751-2,776	10K	HMMWV-80/30 PU-751-90/20	CH-47	110
M1037 with NC LOS (V3) S-250 Shelter and PU-751/M Generator	M1037-8,225 PU-751-2,772	10K	HMMWV-80/30 PU-751-90/20	CH-47	110
M1037 with LEN LOS (V4) S-250 Shelter and PU-751/M Generator	M1037-8,125 PU-751-2,772	10K	HMMWV-80/30 PU-751-90/20	CH-47	110
M1037 with SCC Planning S-250E Shelter and PU-751/M Generator	M1037-8,003 PU-751-2,531	10K	HMMWV-80/30 PU-751-90/20	CH-47	110
M1037 with Radio Accessories S-250 Shelter and PU-751/M Generator	M1037-8,226 PU-751-2,751	10K	HMMWV-80/30 PU-751-90/20	CH-47	110
M1037 with SEN (V1) S-250E Shelter and PU-753/M Generator	M1037-8,231 PU-753-2,759	10K	HMMWV-80/30 PU-751-90/20	CH-47	110
M1037 with SEN (V2) S-250E Shelter and PU-753/M Generator	M1037-8,354 PU-753-2,759	10K	HMMWV-80/3 PU-751-90/20	CH-47	110
M1037 with Maintenance 1 S-250 Shelter and PU-753/M Generator	M1037-8,084 PU-753-2,680	10K	HMMWV-80/3 PU-751-90/20	CH-47	110
M1037 with NC Operations S-250E Shelter and PU-753/M Generator	M1037-8,222 PU-753-2,681	10K	HMMWV-80/3 PU-751-90/20	CH-47	110
M1037 with NC Management S-250E Shelter and PU-753/M Generator	M1037-7,921 PU-753-2,681	10K	HMMWV-80/3 PU-751-90/20	CH-47	110
M1037 with LEN Operations S-250E Shelter and PU-753/M Generator	M1037-8,309 PU-753-2,759	10K	HMMWV-80/3 PU-751-90/20	CH-47	110

Table 5-3. M1037 Shelter Carrier with S250/S-250E Shelter and M116A2 Trailer Mounted Generators (continued)

NOMENCLATURE	MAX WEIGHT (POUNDS)	SLING SET	LINK COUNT FRONT/ REAR	TYPE OF A/C	RECOMMENDED AIRSPEED (KNOTS)
M1037 with LEN Management S-250E Shelter and PU-753/M Generator	M1037-8,288 PU-753-2,681	10K	HMMWV-80/30 PU-751-90/20	CH-47	110
M1037 with SCC Technical S-250E Shelter and PU-753/M Generator	M1037-8,075 PU-753-2,681	10K	HMMWV-80/30 PU-751-90/20	CH-47	110
M1037 S-250 Shelter and PU-625/G Generator	M1037-8,800 PU-625-2,000	10K	HMMWV-80/30 PU-751-90/20	CH-47	110

b. Materials. The following materials are required to rig this load:

(1) Sling set (10,000-pound capacity) (2 each).

(a) Chain length, part number 38850-00053-101, from a 10,000-pound capacity sling set (8 each).

(b) Coupling link, part number 577-0615, from a 10,000-pound sling set (8 each).

(2) Tape, adhesive, pressure-sensitive, 2-inch wide roll.

(3) Cord, nylon, Type III, 550-pound breaking strength.

(4) Webbing, cotton, 1/4-inch, 80-pound breaking strenth.

(5) Strap, cargo, tie-down, CGU-1/B (2 each, or more as required to secure cargo).

(6) Felt sheet, cattle hair, Type IV, 1/2-inch or suitable substitute.

c. Personnel. Two persons can prepare and rig the M1037 HMMWV in 15 minutes. Two persons can prepare and rig the generator set in 10 minutes.

d. Procedures. Attach the generator set to the truck by placing the lunette on the pintle hook and securing the latch. Secure the safety chains, cables, and hoses. Position the vehicle on level ground so both the truck and generator set are in a straight line. The following procedures apply to this load:

(1) Preparation. Prepare the load using the following steps:

(a) Fold mirrors forward in front of the windshield and tie together with Type III nylon cord. Remove the doors and secure to the seats with Type III nylon cord.

(b) Ensure the shelter is secured to the vehicle using wire rope or tie-down straps. Secure all loose equipment inside the shelter with tape, Type III nylon cord, or tie-down straps. Close and secure the door.

(c) Secure all equipment and cargo inside the truck with tie-down straps, tape, or Type III nylon cord.

(d) Ensure the fuel tanks are not over 3/4 full. Inspect the fuel tank cap, oil filler cap, and battery caps for proper installation.

(e) Engage the vehicle parking brake and put the transmission in neutral.

(f) Ensure the front wheels are pointed straight ahead. Tie down the steering wheel, using the securing device attached under the dashboard.

(g) Install the lift provisions on the outer ends of the rear bumper by removing the tiedown provisions located on the front bumper and installing on the outer ends of the front bumper and installing on the outer ends of the rear bumper.

(h) Partially retract all landing legs and secure in position with Type III nylon cord.

(i) Retract the lunette leg and secure with Type III nylon cord.

(j) Secure all lids, doors, and caps with tape or Type III nylon cord.

(k) Ensure the parking brake is set.

(m) Route the hook portion of a CGU-1/B tiedown strap through the left rear inboard tiedown provision located near the pintle on the rear bumper of the truck and through the mounting bracket on the front of the trailer A-frame. Connect the hook to the ratchet of the CGU-1/B.

(n) Repeat the above procedure on the right side of the load.

(o) Tighten both CGU-1/B tie-down straps at the same time. Secure the excess strap and safety the ratchet handles in the closed position with tape.

(p) Connect one additional chain length to each chain on each sling set with a coupling link.

(2) Rigging. Rig the load according to the steps in Figure 5-3.

(3) Hookup. Two hookup teams are required for this load. The static wand person discharges the static electricity with the static wand. The forward hookup person kneels on top of the shelter and places apex fitting 1 onto the forward cargo hook. The aft hookup person stands on the generator fender and places apex fitting 2 onto the aft cargo hook. The hookup team then carefully dismounts the trailer and remains close to the load as the helicopter removes slack from the sling legs. When successful hookup is assured, the hookup team quickly exits the area underneath the helicopter to the designated rendezvous point.

(4) Derigging. Derigging is the reverse of the preparation and rigging procedures in steps d (1) and d (2).

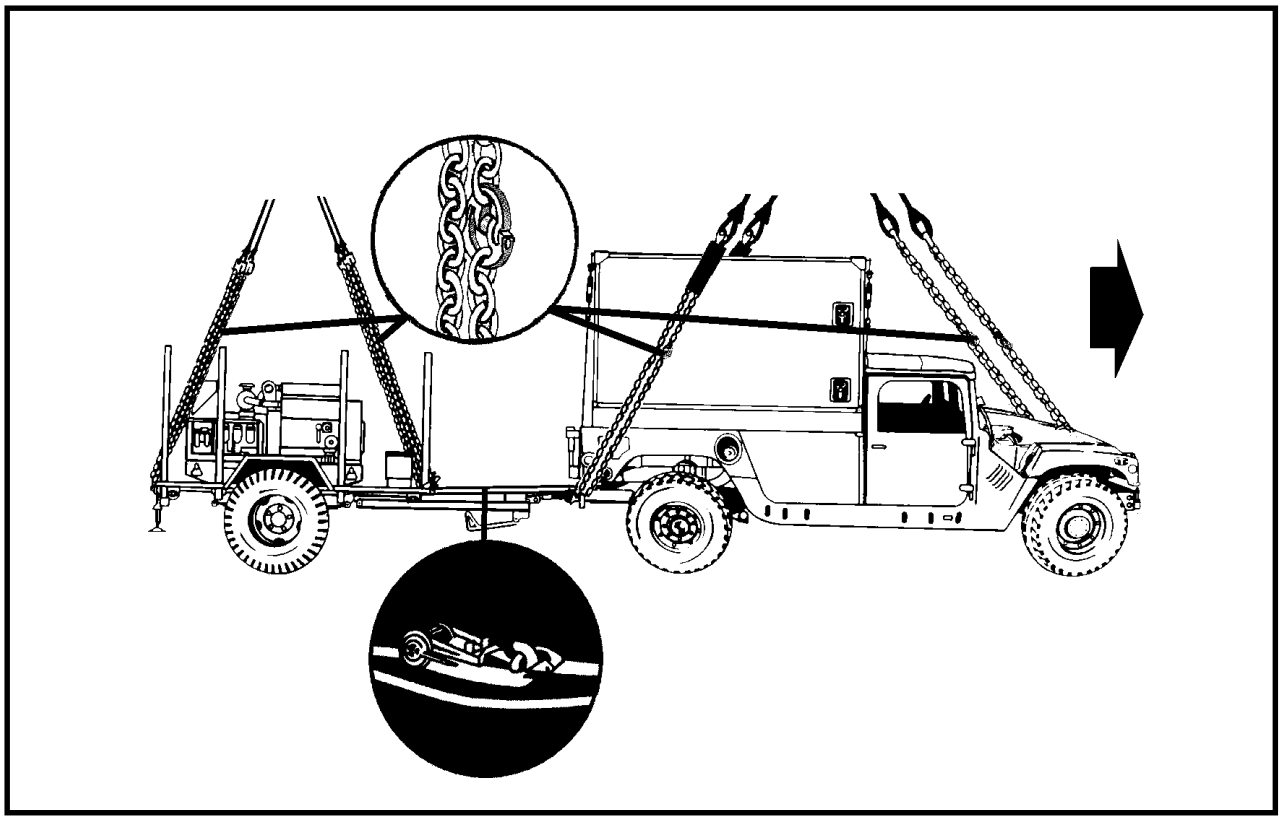

Figure 5-3. M1037 Shelter Carrier with S250/S-250E Shelter and M116A2 Trailer Mounted Generators

RIGGING STEPS

1. Position the apex fitting of sling set 1 on top of the shelter. Route outer sling legs 1and 2 to the front of the vehicle and inner sling legs 3 and 4 to the rear. Sling legs 1 and 3 must be on the left side of the load.

2. Loop the chain end of sling leg 1 through the left front lift provision that protrudes through the hood. Place the correct link from Table 5-3 in the grab hook. Repeat with sling leg 2 and the right front lift provision. Secure excess chain with tape or Type III nylon cord.

3. Loop the chain end of the sling legs through their respective lift provisions located on the outer ends of the rear bumper. Place the correct link from Table 5-3 in the grab hook. Secure excess chain with tape or Type III nylon cord.

4. Pad the chain where it contacts the shelter sides.

5. Cluster and tie or tape (breakaway technique) all sling legs together on top of the vehicle to prevent entanglement during hookup and lift-off.

6. Position the apex fitting of sling set 2 on top of the generator set. Route outer sling legs 1and 2 between the two front bows to the front of the generator and inner sling legs 3 and 4 between the two rear bows to the rear of the generator. Sling legs 1 and 3 must be on the left side of the load.

7. Loop the chain end of sling leg 1 through the left front lift provision located on the front of the trailer. Place the correct link from Table 5-3 in the grab hook. Repeat with sling leg 2 through the right front lift provision. Secure excess chain with tape or Type III nylon cord.

8. Loop the chain end of sling leg 3 through the left rear lift provision. Place the correct link from Table 5-3 in the grab hook. Repeat with sling leg 4 through the right rear lift provision. Secure excess chain with tape or Type III nylon cord.

9. Tape sling leg 1 to the front bow of the trailer (breakaway technique) to prevent entanglement with the cable reel handle.

10. Cluster and tie or tape (breakaway technique) all sling legs together on top of the trailer to prevent entanglement during hookup and lift-off.

Figure 5-3. M1037 Shelter Carrier with S250/S-250E Shelter and M116A2 Trailer Mounted Generators (continued)

5-5. M998/M1038 Truck, Utility, 1-1/4 Ton (HMMWV) and G-85/TPQ-36 (V)7 Generator Group on M116A2 Modified Trailer

a. Applicability. The following items in Table 5-4 are certified for the helicopter(s) listed in the following table by the US Army Soldier Systems Center:

Table 5-4. M998/M1038 Truck, Utility, 1-1/4 Ton and G-85/TPQ-36 (V)7 Generator Group

NOMENCLATURE	MAX WEIGHT (POUNDS)	SLING SET	LINK COUNT FRONT/ REAR	TYPE OF AIRCRAFT	RECOMMENDED AIRSPEED (KNOTS)
Truck, 1-1/4 Ton, HMMWV, M998/M1038	7,000	10K	79/3	CH-47	120
G-85/TPQ-36 (V) 7 Generator Trailer Group	3,475	10K	52/36	CH-47	120

b. Materials. The following materials are required to rig this load:

(1) Sling set (10,000-pound capacity) (2 each).

(2) Tape, adhesive, pressure-sensitive, 2-inch wide roll.

(3) Cord, nylon, Type III, 550-pound breaking strength.

(4) Webbing, cotton, 1/4-inch, 80-pound breaking strength.

(5) Strap, cargo, tie-down, CGU-1/B (2 each, or more as required to secure cargo).

(6) Felt sheet, cattle hair, Type IV, 1/2-inch or suitable substitute.

c. Personnel. Two persons can prepare and rig the HMMWV in 15 minutes. Two persons can prepare and rig the generator set in 10 minutes.

d. Procedures. Attach the generator set to the truck by placing the lunette on the pintle hook and securing the latch. Secure the safety chains, cables, and hoses. Position the vehicle on level ground so both the truck and generator set are in a straight line. The following procedures apply to this load:

(1) Preparation. Prepare the load using the following steps:

(a) Fold mirrors forward in front of the windshield and tie together with Type III nylon cord. Remove the doors and secure to the seats with Type III nylon cord.

(b) Secure all equipment and cargo inside the truck with tiedown straps, tape, or Type III nylon cord.

(c) Ensure the fuel tanks are not over 3/4 full. Inspect the fuel tank cap, oil filler cap, and battery caps for proper installation.

(d) Engage the vehicle parking brake and put the transmission in neutral.

(e) Ensure the front wheels are pointed straight ahead. Tie down the steering wheel, using the securing device attached under the dashboard.

(f) Retract the lunette leg and secure with Type III nylon cord.

(g) Secure all lids, doors, and caps with tape or Type III nylon cord.

(h) Ensure the trailer parking brakes are set.

(i) Route the hook portion of a CGU-1/B tiedown strap through the left rear inboard tiedown provision located near the pintle on the rear bumper of the truck and

through the mounting bracket on the front of the trailer A-frame. Connect the hook to the ratchet of the CGU-1/B.

(j) Repeat the above procedure on the right side of the load.

(k) Tighten both CGU-1/B tiedown straps at the same time. Secure the excess strap and safety the ratchet handles in the closed position with tape.

(2) Rigging. Rig the load according to the steps in Figure 5-4.

(3) Hookup. Two hookup teams are required for this load. The static wand person discharges the static electricity with the static wand. The forward hookup person stands in the bed of the truck and places apex fitting 1 onto the forward cargo hook. The aft hookup person stands on the generator fender and places apex fitting 2 onto the aft cargo hook. The hookup team then carefully dismounts the trailer and remains close to the load as the helicopter removes slack from the sling legs. When successful hookup is assured, the hookup team quickly exits the area underneath the helicopter to the designated rendezvous point.

(4) Derigging. Derigging is the reverse of the preparation and rigging procedures in steps d (1) and d (2).

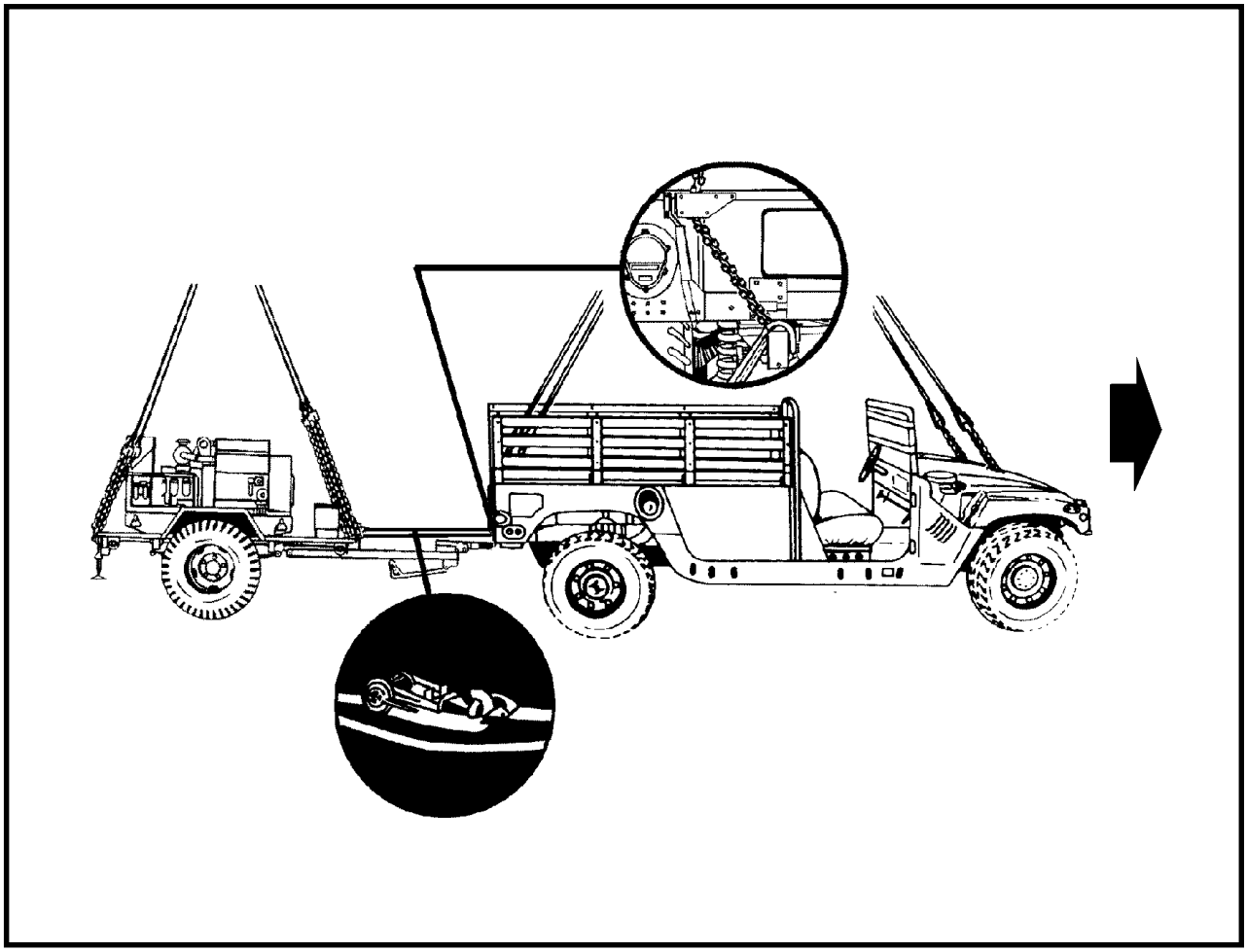

Figure 5-4. M998/M1038 Truck, Utility, 1-1/4 Ton and G-85/TPQ-36 (V)7 Generator Group

RIGGING STEPS	
1. Position the apex fitting of sling set 1 in the bed of the vehicle. Route outer sling legs 1and 2 to the front of the vehicle and inner sling legs 3 and 4 to the rear. Sling legs 1 and 3 must be on the left side of the load.	**5.** Position apex fitting of sling set 2 on the trailer but not on top of the generator. Route outer sling legs 1and 2 to the front of the trailer and inner sling legs 3 and 4 to the rear. Sling legs 1 and 3 must be on the left side of the load.
2. Loop the chain end of sling leg 1 through the left front lift provision that protrudes through the hood. Place the correct link from Table 5-4 in the grab hook. Repeat with sling leg 2 and the right front lift provision. Secure excess chain with tape or Type III nylon cord.	**6.** Loop the chain end of sling leg 1 through the left front lift provision located near the A-frame on the front of the trailer. Place the correct link from Table 5-4 in the grab hook. Repeat with sling leg 2 through the right front lift provision. Secure excess chain with tape or Type III nylon cord.
3. Route the chain end of sling leg 3 through the sling guide in the upper left corner of the tailgate. Loop the chain end through the left lift provision on the bumper and thread back through the sling guide in the tailgate. Place the correct link from Table 5-4 in the grab hook. Repeat with sling leg 4 and the right rear lift provision.	**7.** Route the chain end of sling leg 3 through the left rear lift provision. Place the correct link from Table 5-4 in the grab hook. Repeat with sling leg 4 through the right rear lift provision. Secure excess chain with tape or Type III nylon cord.
4. Cluster and tie or tape (breakaway technique) all sling legs together on top of the vehicle to prevent entanglement during hookup and lift-off.	**8.** Pad the chains where they contact the load.
	9. Cluster and tie or tape (breakaway technique) all sling legs together on top of the trailer to prevent entanglement during hookup and lift-off.

Figure 5-4. M998/M1038 Truck, Utility, 1-1/4 Ton and G-85/TPQ-36 (V)7 Generator Group (continued)

5-6. M1097 Truck, Utility, 1-1/4 Ton (HMMWV) with Pallet Group OA-9134/TSC, Antenna AS-3036/TSC and PU-753 Generator Set on M116A2 Trailer

a. Applicability. The following items in Table 5-5 are certified for the helicopter(s) listed in the following table by the US Army Soldier Systems Center:

Table 5-5. M1097 Truck, Utility, 1-1/4 Ton (HMMWV) with Pallet Group OA-9134/TSC, Antenna AS-3036/TSC and PU-753 Generator Set on M116A2 Trailer

NOMENCLATURE	MAX WEIGHT (POUNDS)	SLING SET	LINK COUNT FRONT/ REAR	TYPE OF AIRCRAFT	RECOMMENDED AIRSPEED (KNOTS)
Truck, Utility, 1 1/4-ton , M1097 with Pallet Group OA-9134/TSC, Antenna AS-3036/TSC	7,120	25K	62/3	CH-47	110
PU-753 Generator Set on M116A2 Trailer	3,000	25K	70/54	CH-47	110

b. Materials. The following materials are required to rig this load:

(1) Sling set (25,000-pound capacity) (2 each).

(2) Tape, adhesive, pressure-sensitive, 2-inch wide roll.

(3) Cord, nylon, Type III, 550-pound breaking strength.

(4) Webbing, cotton, 1/4-inch, 80-pound breaking strength.

(5) Strap, cargo, tie-down, CGU-1/B (2 each, or more as required to secure cargo).

(6) Felt sheet, cattle hair, Type IV, 1/2-inch or suitable substitute.

(7) Spreader bar assembly (component of the M996/ M997 Ambulance).

(8) Reach pendant, 11,000- or 25,000-pound capacity.

c. Personnel. Two persons can prepare and rig the M1097 HMMWV in 15 minutes. Two persons can prepare and rig the generator set in 10 minutes.

d. Procedures. Attach the generator set to the truck by placing the lunette on the pintle hook and securing the latch. Secure the safety chains, cables, and hoses. Position the vehicle on level ground so both the truck and generator set are in a straight line. The following procedures apply to this load:

(1) Preparation. Prepare the load using the following steps:

(a) Fold the mirrors in and tie together with Type III nylon cord. Remove the doors and secure to the seats with Type III nylon cord.

(b) Ensure the antenna support structure assembly is secured to the vehicle. Secure all loose equipment inside the antenna support structure with tape, Type III nylon cord, or tiedown straps.

(c) Secure all equipment and cargo inside the truck with tie-down straps, tape, or Type III nylon cord.

(d) Ensure the fuel tanks are not over 3/4 full. Inspect the fuel tank cap, oil filler cap, and battery caps for proper installation.

(e) Engage the vehicle parking brake and put the transmission in neutral.

(f) Ensure the front wheels are pointed straight ahead.

Tie down the steering wheel, using the securing device attached under the dashboard.

(g) Install the lift provisions on the outer ends of the rear bumper by removing the tiedown provisions located on the front bumper and installing on the outer ends of the rear bumper.

(h) Partially retract all landing legs and secure in position with Type III nylon cord.

(i) Retract the lunette leg and secure with Type III nylon cord.

(j) Secure all lids, doors, and caps with tape or Type III nylon cord.

(k) Ensure the trailer hand brake is set.

(l) Route the hook portion of a CGU-1/B tiedown strap through the left rear inboard tiedown provision located near the pintle on the rear bumper of the truck and through the mounting bracket on the front of the trailer A-frame. Connect the hook to the ratchet of the CGU-1/B.

(m) Repeat the above procedure on the right side of the load.

(n) Tighten both CGU-1/B tie-down straps at the same time. Secure the excess strap and safety the ratchet handles in the closed position with tape. Tape the CGU-1/B every 24 inches to prevent flapping.

(o) Attach one reach pendant on each sling set apex fitting.

(2) Rigging. Rig the load according to the steps in Figure 5-5.

(3) Hookup. Two hookup persons are required for this load. The forward hookup person stands on top of the support structure and places apex fitting 1 onto the forward cargo hook. The aft hookup person stands on the generator fender and places apex fitting 2 onto the aft cargo hook. The hookup team then carefully dismounts the trailer and remains close to the load as the helicopter removes slack from the sling legs. When successful hookup is assured, the hookup team quickly exits the area underneath the helicopter to the designated rendezvous point.

CAUTION

An aircrew member must monitor the spreader bar assembly at all times. If there is any evidence of bending of the spreader bar the load should be set down at the nearest suitable landing area.

(4) Derigging. Derigging is the reverse of the preparation and rigging procedures in steps d (1) and d (2).

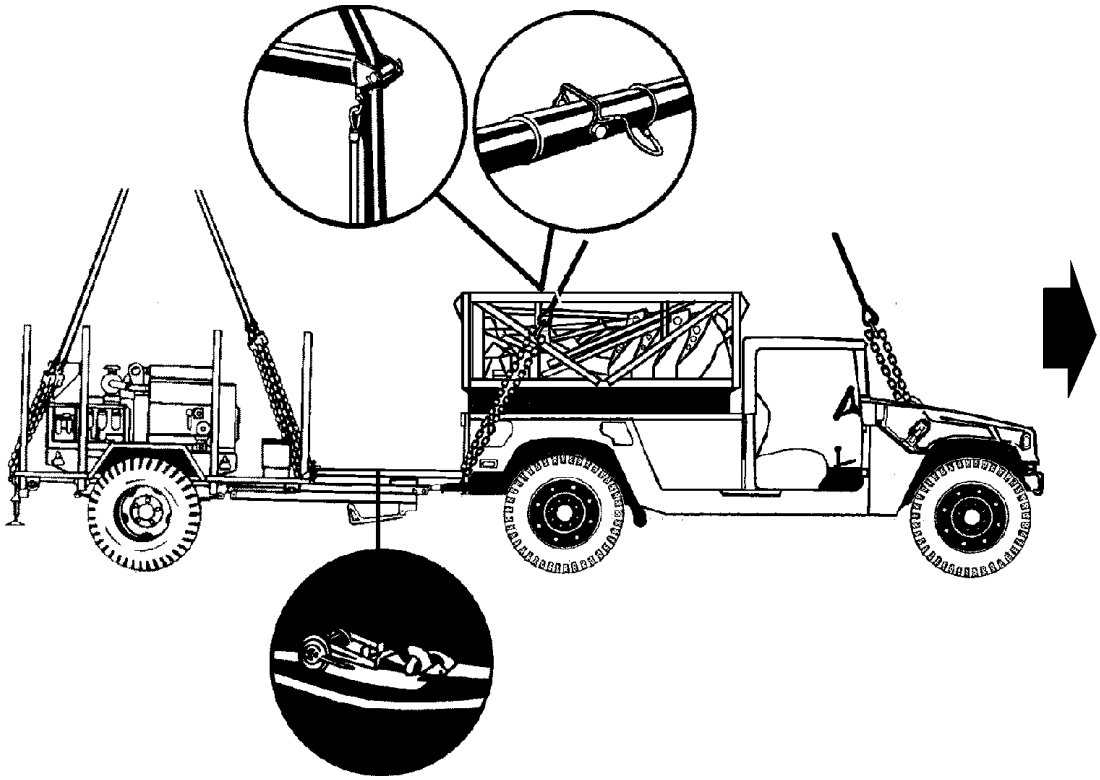

RIGGING STEPS

1. Position apex fitting and reach pendant on top of the antenna support structure assembly. Route outer sling legs 1and 2 to the front of the vehicle and inner sling legs 3 and 4 to the rear. Sling legs 1 and 3 must be on the left side of the load.

2. Loop the chain end of sling leg 1 through the left front lift provision that protrudes through the hood from inboard to outboard. Place the correct link from Table 5-5 in the grab hook. Repeat with sling leg 2 and the right front lift provision. Secure excess chain with tape or Type III nylon cord.

3. Position the spreader bar assembly 12 inches from the rear of the antenna support structure. Route the rear sling ropes through the guides on the end of the spreader bar. Secure the sling ropes in the guides with the retainer pins and keepers.

4. Route the chain end of sling leg 3 through the lift provision located on the left end of the rear bumper from inboard to outboard. Place the correct link from Table 5-5 in the grab hook. Repeat with sling leg 4 and the right rear lift provision.

5. Remove all slack from sling legs 3 and 4. Install a breakaway tie using 1/4-inch cotton webbing around each leg and around the top bar of the antenna support structure.

Figure 5-5. M1097 Truck, Utility, 1-1/4 Ton (HMMWV) with Pallet Group OA-9134/TSC, Antenna AS-3036/TSC and PU-753 Generator Set on M116A2 Trailer

RIGGING STEPS

CAUTION
Do not use Type III nylon cord to make the breakaway ties.

6. Extend the spreader bar retainer cable down the length of the sling leg and secure to the chain with Type III nylon cord.

7. Cluster and tie or tape (breakaway technique) all sling legs together on top of the support structure to prevent entanglement during hookup and lift-off.

8. Position the apex fitting and Reach Pendant of sling set 2 on top of the generator set. Route outer sling legs 1and 2 between the two front bows to the front of the generator and inner sling legs 3 and 4 between the two rear bows to the rear of the generator. Sling legs 1 and 3 must be on the left side of the load.

9. Loop the chain end of sling leg 1 through the left front lift provision located on the front of the trailer. Place the correct link from Table 5-5 in the grab hook. Repeat with sling leg 2 through the right front lift provision. Secure excess chain with tape or Type III nylon cord.

10. Loop the chain end of sling leg 3 through the left rear lift provision. Place the correct link from Table 5-5 in the grab hook. Repeat with sling leg 4 through the right rear lift provision. Secure excess chain with tape or Type III nylon cord.

11. Pad the chains where they contact the load.

12. Cluster and tie or tape (breakaway technique) all sling legs together on top of the trailer to prevent entanglement during hookup and lift-off.

Figure 5-5. M1097 Truck, Utility, 1-1/4 Ton (HMMWV) with Pallet Group OA-9134/TSC, Antenna AS-3036/TSC and PU-753 Generator Set on M116A2 Trailer (continued)

5-7. M1097 Shelter Carrier, 1-1/4 Ton (HMMWV) with AN/TPQ-36 (V) 7, (S-250 Shelter), Operations Control Group and Radar Set Antenna Mounted on M116A2 Trailer

a. Applicability. The following items in Table 5-6 are certified for the helicopter(s) listed in the following table by the US Army Soldier Systems Center:

Table 5-6. M1097 Shelter Carrier, 1-1/4 Ton (HMMWV) with AN/TPQ-36 (V) 7, (S-250 Shelter), Operations Control Group and Radar Set Antenna Mounted on M116A2 Trailer

NOMENCLATURE	MAX WEIGHT (POUNDS)	SLING SET	LINK COUNT FRONT/ REAR	TYPE OF AIRCRAFT	RECOMMENDED AIRSPEED (KNOTS)
Truck, Shelter Carrier, 1 1/4-Ton, M1097 with OKG-398/TPW, Operations Control Group, (S-250 Shelter)	8,500	10K	80/30	CH-47	120
Radar Set Antenna, AN/TPQ-36 (V) 7 on M116A2 Trailer	2,975	10K	68/80	CH-47	120

b. Materials. The following materials are required to rig this load:

(1) Sling set (10,000-pound capacity) (2 each).

(a) Chain length, part number 38850-00053-101, from a 10,000-pound capacity sling set (8 each).

(b) Coupling link, part number 577-0615, from a 10,000-pound sling set (8 each).

(2) Tape, adhesive, pressure-sensitive, 2-inch wide roll.

(3) Cord, nylon, Type III, 550-pound breaking strength.

(4) Webbing, cotton, 1/4-inch, 80-pound breaking strength.

(5) Strap, cargo, tie-down, CGU-1/B (2 each, or more as required to secure cargo).

(6) Felt sheet, cattle hair, Type IV, 1/2-inch or suitable substitute.

(7) Plywood, 4 feet x 8 feet x 3/4 inches.

(8) Reach Pendant, 11,000- or 25,000-pound capacity.

(9) Heater hose, 3/4-inch (as required).

c. Personnel. Two persons can prepare and rig the M1097 HMMWV in 15 minutes. Two persons can prepare and rig the antenna trailer in 20 minutes.

NOTE: The plywood is a full sheet which is notched to fit around the bracket located at the top of the antenna array. Attach a piece of 3/4-inch heater hose, split lengthwise along the forward edge of the plywood to protect the sling legs from fraying.

d. Procedures. Attach the antenna trailer to the truck by placing the lunette on the pintle hook and securing the latch. Secure the safety chains, cables, and hoses. Position the vehicle on level ground so both the truck and radar set are in a straight line. The following procedures apply to this load:

(1) Preparation. Prepare the load using the following steps:

(a) Fold the mirrors in and tie together with Type III nylon cord. Remove the doors and secure to the seats with Type III nylon cord.

(b) Secure all loose equipment inside the shelter with tape, Type III nylon cord, or tiedown straps.

(c) Secure all equipment and cargo inside the truck with tiedown straps, tape, or Type III nylon cord.

(d) Ensure the fuel tank is not over 3/4 full. Inspect the fuel tank cap, oil filler cap, and battery caps for proper installation.

(e) Engage the vehicle parking brake and put the transmission in neutral.

(f) Ensure the front wheels are pointed straight ahead.Tie down the steering wheel, using the securing device attached under the dashboard.

(g) Install the lift provisions on the outer ends of the rear bumper by removing the tiedown provisions located on the front bumper and installing on the outer ends of the rear bumper.

(h) Raise the landing leg and secure in position with safety pins and tape.

(i) Secure all lids, doors, and caps with tape or Type III nylon cord.

(j) Ensure the trailer hand brake is set.

(k) Place the radar set in the travel mode.

(l) Place the sheet of plywood on the top of the antenna, firmly against the BSU. Route and secure a CGU-1/B across the width of the plywood at the center of the array. Hook a second CGU-1/B to the front right tiedown provision located on the front of the right side of the trailer. Route the tiedown diagonally over the plywood and secure the ratchet to the left rear of the stowed ground rod, the lower tiedown provision, or the trailer frame. Repeat the procedure on the left side of the antenna routing the tiedown diagonally over the plywood.

(m) Route the hook portion of a CGU-1/B tiedown strap through the left rear inboard tiedown provision located near the pintle on the rear bumper of the truck and through the mounting bracket on the front of the trailer A-frame. Connect the hook to the ratchet of the CGU-1/B.

(n) Repeat the above procedure on the right side of the load.

(o) Tighten both CGU-1/B tie-down straps at the same time. Secure the excess strap and safety the ratchet handles in the closed position with tape. Tape the CGU-1/B every 24 inches to prevent flapping.

(p) Attach one reach pendant on each sling set apex fitting.

(q) Connect one additional chain length to each chain on each sling set with a coupling link.

(2) Rigging. Rig the load according to the steps in Figure 5-6.

(3) Hookup. Two hookup persons are required for this load. The forward hookup person stands on cab of the truck and places apex fitting 1 onto the forward cargo hook. The aft hookup person stands on the fender of the trailer and places apex fitting 2 onto the aft cargo hook. The hookup team then carefully dismounts the trailer and remains close to the load as the helicopter removes slack from the sling legs. When successful hookup is assured, the hookup team quickly exits the area underneath the helicopter to the designated rendezvous point.

(4) Derigging. Derigging is the reverse of the preparation and rigging procedures in steps d (1) and d (2).

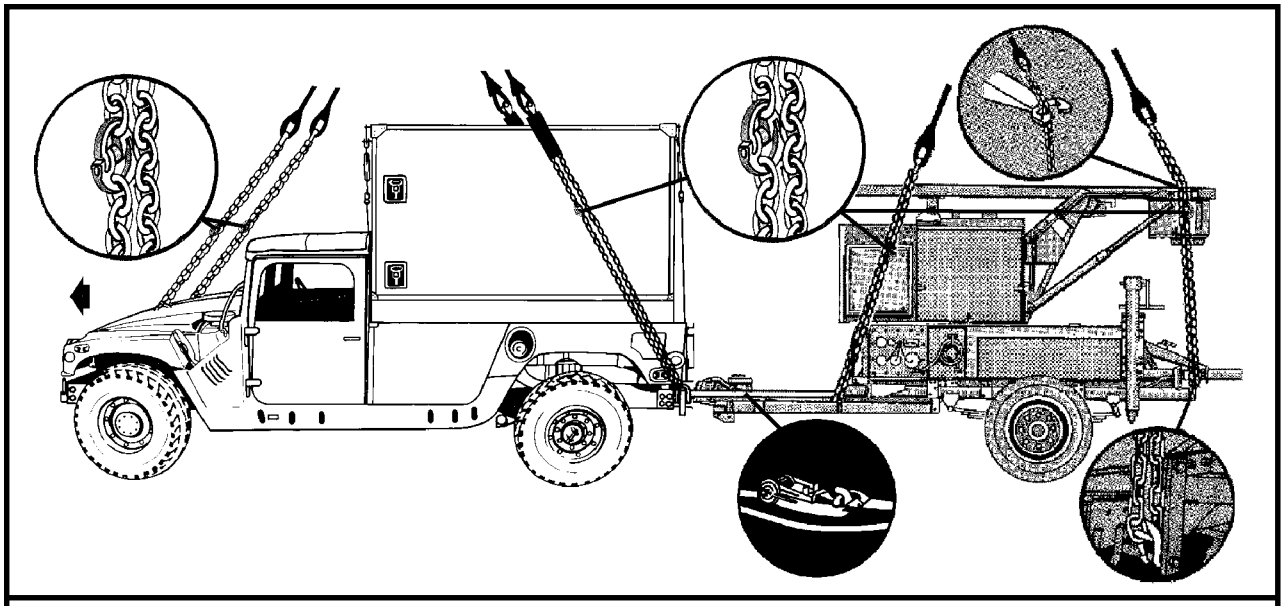

RIGGING STEPS

1. Position apex fitting and reach pendant on top of the truck. Route outer sling legs 1and 2 to the front of the vehicle and inner sling legs 3 and 4 to the rear. Sling legs 1 and 3 must be on the left side of the load.

2. Loop the chain end of sling leg 1 through the left front lift provision that protrudes through the hood from inboard to outboard. Place the correct link from Table 5-6 in the grab hook. Repeat with sling leg 2 and the right front lift provision. Secure excess chain with tape or Type III nylon cord.

3. Loop the chain end of the sling legs through their respective lift provisions located on the outer ends of the rear bumper. Place the correct link from Table 5-6 in the grab hook. Secure excess chain with tape or Type III nylon cord.

4. Pad the chain where it contacts the shelter sides.

5. Cluster and tie or tape (breakaway technique) all sling legs together on top of the vehicle to prevent entanglement during hookup and lift-off.

6. Position the apex fitting of sling set 2 on top of the trailer but not on top of the radar panel. Route outer sling legs 1and 2 to the front of the trailer and inner sling legs 3 and 4 to the rear of the trailer Sling legs 1 and 3 must be on the left side of the load.

7. Loop the chain end of sling leg 1 through the left front lift provision located on the front of the trailer near the A-frame. Place the correct link from Table 5-6 in the grab hook. Remove the slack from the sling leg and pad the sling/chain where it contacts the antenna and plywood. Secure the sling leg with a breakaway tie routed through a hole drilled in the plywood. Repeat with sling leg 2 through the right front lift provision. Secure excess chain with tape or Type III nylon cord.

8. Loop the chain end of sling leg 3 through the left rear lift provision (the upper shackle on the deck frame). Place the correct link from Table 5-6 in the grab hook. Remove the slack from the sling leg and pad the sling/chain where it contacts the sling leg guide on the antenna. Place the sling leg in the guide and secure with a breakaway tie. Repeat with sling leg 4 through the right rear lift provision. Secure excess chain with tape or Type III nylon cord.

9. Cluster and tie or tape (breakaway technique) all sling legs together on top of the trailer to prevent entanglement during hookup and lift-off.

Figure 5-6. M1097 Shelter Carrier, 1-1/4 Ton (HMMWV) with AN/TPQ-36 (V) 7, (S-250 Shelter), Operations Control Group and Radar Set Antenna Mounted on M116A2 Trailer

5-8. M1097, 1-1/4 Ton (HMMWV) with Generator Pallet Group, G-86-TPQ-36 (V)7, and Radar Set Antenna Mounted on M116A2 Trailer

a. Applicability. The following items in Table 5-7 are certified for the helicopter(s) listed in the following table by the US Army Soldier Systems Center:

Table 5-7. M1097, 1-1/4 Ton (HMMWV) with Generator Pallet Group, G-86-TPQ-36 (V)7, and Radar Set Antenna Mounted on M116A2 Trailer

NOMENCLATURE	MAX WEIGHT (POUNDS)	SLING SET	LINK COUNT FRONT/ REAR	TYPE OF AIRCRAFT	RECOMMENDED AIRSPEED (KNOTS)
Truck, (HMMWV) M1097 with Generator Pallet Group, G-86-TPQ-36 (V) 7	7,400	10K	80/30	CH-47	120
Radar Set Antenna, AN/TPQ-36 (V) 7 on M116A2 Trailer	2,975	10K	68/80	CH-47	120

b. Materials. The following materials are required to rig this load:

(1) Sling set (10,000-pound capacity) (2 each).

(2) Tape, adhesive, pressure-sensitive, 2-inch wide roll.

(3) Cord, nylon, Type III, 550-pound breaking strength.

(4) Webbing, cotton, 1/4-inch, 80-pound breaking strength.

(5) Strap, cargo, tie-down, CGU-1/B (5 each).

(6) Felt sheet, cattle hair, Type IV, 1/2-inch or suitable substitute.

(7) Plywood, 4 feet x 8 feet x 3/4 inches.

(8) Reach pendant, 11,000- or 25,000-pound capacity.

(9) Heater hose, 3/4-inch (as required).

c. Personnel. Two persons can prepare and rig the M1097 HMMWV in 15 minutes. Two persons can prepare and rig the antenna trailer in 20 minutes.

NOTE: The plywood is a full sheet which is notched to fit around the bracket located at the top of the antenna array. Attach a piece of 3/4-inch heater hose, split lengthwise along the forward edge of the plywood to protect the sling legs from fraying.

d. Procedures. Attach the antenna trailer to the truck by placing the lunette on the pintle hook and securing the latch. Secure the safety chains, cables, and hoses. Position the vehicle on level ground so both the truck and radar set are in a straight line. The following procedures apply to this load:

(1) Preparation. Prepare the load using the following steps:

(a) Fold the mirrors in and tie together with Type III nylon cord. Remove the doors and secure to the seats with Type III nylon cord.

(b) Secure all equipment and cargo inside the truck with tiedown straps, tape, or Type III nylon cord.

(c) Ensure the fuel tanks are not over 3/4 full. Inspect the fuel tank cap, oil filler cap, and battery caps for proper installation.

(d) Engage the vehicle parking brake and put the transmission in neutral.

(e) Ensure the front wheels are pointed straight ahead.Tie down the steering wheel, using the securing device attached under the dashboard.

(f) Install the lift provisions on the outer ends of the rear bumper by removing the tiedown provisions located on the front bumper and installing on the outer ends of the rear bumper.

(g) Raise the landing leg and secure in position with safety pins and tape.

(h) Secure all lids, doors, and caps with tape or Type III nylon cord.

(i) Ensure the trailer hand brake is set.

(j) Place the radar set in the travel mode.

(k) Place the sheet of plywood on the top of the antenna, firmly against the BSU. Route and secure a CGU-1/B across the width of the plywood at the center of the array. Hook a second CGU-1/B to the front right tie-down provision located on the front of the right side of the trailer. Route the tiedown diagonally over the plywood and secure the ratchet to the left rear of the stowed ground rod, the lower tiedown provision, or the trailer frame. Repeat the procedure on the left side of the antenna routing the tiedown diagonally over the plywood.

(l) Route the hook portion of a CGU-1/B tiedown strap through the left rear inboard tiedown provision located near the pintle on the rear bumper of the truck and through the mounting bracket on the front of the trailer A-frame. Connect the hook to the ratchet of the CGU-1/B.

(m) Repeat the above procedure on the right side of the load.

(n) Tighten both CGU-1/B tie-down straps at the same time. Secure the excess strap and safety the ratchet handles in the closed position with tape. Tape the CGU-1/B every 24 inches to prevent flapping.

(o) Attach one reach pendant on each sling set apex fitting.

(2) Rigging. Rig the load according to the steps in Figure 5-7.

(3) Hookup. Two hookup persons are required for this load. The forward hookup person stands on cab of the truck and places apex fitting 1 onto the forward cargo hook. The aft hookup person stands on the fender of the trailer and places apex fitting 2 onto the aft cargo hook. The hookup team then carefully dismounts the trailer and remains close to the load as the helicopter removes slack from the sling legs. When successful hookup is assured, the hookup team quickly exits the area underneath the helicopter to the designated rendezvous point.

(4) Derigging. Derigging is the reverse of the preparation and rigging procedures in steps d (1) and d (2).

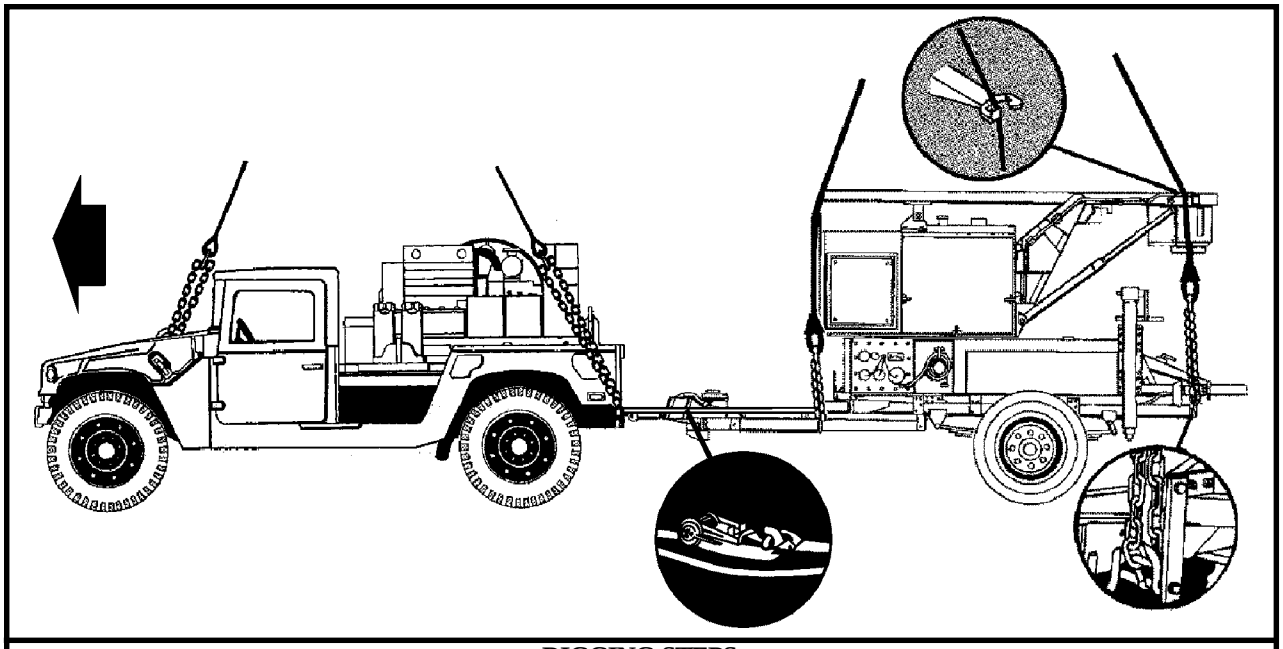

RIGGING STEPS

1. Position apex fitting and reach pendant on top of the truck. Route outer sling legs 1and 2 to the front of the vehicle and inner sling legs 3 and 4 to the rear. Sling legs 1 and 3 must be on the left side of the load.

2. Loop the chain end of sling leg 1 through the left front lift provision that protrudes through the hood from inboard to outboard. Place the correct link from Table 5-7 in the grab hook. Repeat with sling leg 2 and the right front lift provision. Secure excess chain with tape or Type III nylon cord.

3. Loop the chain end of the sling legs through their respective lift provisions located on the outer ends of the rear bumper. Place the correct link from Table 5-7 in the grab hook. Secure excess chain with tape or Type III nylon cord.

4. Cluster and tie or tape (breakaway technique) all sling legs together on top of the vehicle to prevent entanglement during hookup and lift-off.

5. Position the apex fitting of sling set 2 on top of the trailer but not on top of the radar panel. Route outer sling legs 1and 2 to the front of the trailer and inner sling legs 3 and 4 to the rear of the trailer Sling legs 1 and 3 must be on the left side of the load.

6. Loop the chain end of sling leg 1 through the left front lift provision located on the front of the trailer near the A-frame. Place the correct link from Table 5-7 in the grab hook. Remove the slack from the sling leg and pad the sling/chain where it contacts the antenna and plywood. Secure the sling leg with a breakaway tie routed through a hole drilled in the plywood. Repeat with sling leg 2 through the right front lift provision. Secure excess chain with tape or Type III nylon cord.

7. Loop the chain end of sling leg 3 through the left rear lift provision (the upper shackle on the deck frame). Place the correct link from Table 5-7 in the grab hook. Remove the slack from the sling leg and pad the sling/chain where it contacts the sling leg guide on the antenna. Place the sling leg in the guide and secure with a breakaway tie. Repeat with sling leg 4 through the right rear lift provision. Secure excess chain with tape or Type III nylon cord.

8. Pad the chains or sling legs wher they contact the load.

9. Cluster and tie or tape (breakaway technique) all sling legs together on top of the trailer to prevent entanglement during hookup and lift-off.

Figure 5-7. M1097, 1-1/4 Ton (HMMWV) with Generator Pallet Group, G-86-TPQ-36 (V)7, and Radar Set Antenna Mounted on M116A2 Trailer

5-9. M1037 Shelter Carrier, 1-1/4 Ton (HMMWV) with AN/TPQ-36, (S-250 Shelter), Operations Control Group and Radar Set Antenna Mounted on M103A1 Trailer

a. Applicability. The following items in Table 5-8 are certified for the helicopter(s) listed in the following table by the US Army Soldier Systems Center:

Table 5-8. M1037 Shelter Carrier, 1-1/4 Ton (HMMWV) with AN/TPQ-36, (S-250 Shelter), Operations Control Group and Radar Set Antenna Mounted on M103A1 Trailer

NOMENCLATURE	MAX WEIGHT (POUNDS)	SLING SET	LINK COUNT FRONT/ REAR	TYPE OF AIRCRAFT	RECOMMENDED AIRSPEED (KNOTS)
Truck, (HMMWV) M1037 with AN/TPQ-36, S-250 Shelter	8,800	10K	52/3	CH-47	110
Antenna, Radar, AN/TPQ-36 Mounted on an M103A1 Trailer	4,100	10K	20/20	CH-47	110

b. Materials. The following materials are required to rig this load:

(1) Sling set (10,000-pound capacity) (2 each).

(a) Chain length, part number 38850-00053-101, from a 10,000-pound capacity sling set (8 each).

(b) Coupling link, part number 577-0615, from a 10,000-pound sling set (8 each).

(2) Tape, adhesive, pressure-sensitive, 2-inch wide roll.

(3) Cord, nylon, Type III, 550-pound breaking strength.

(4) Webbing, cotton, 1/4-inch, 80-pound breaking strength.

(5) Strap, cargo, tiedown, CGU-1/B (5 each).

(6) Felt sheet, cattle hair, Type IV, 1/2-inch or suitable substitute.

(7) Plywood, 4 feet x 8 feet x 3/4 inches.

(8) Reach Pendant, 11,000- or 25,000-pound capacity.

c. Personnel. Two persons can prepare and rig the M1037 HMMWV in 15 minutes. Two persons can prepare and rig the antenna trailer in 20 minutes.

NOTE: The plywood is a full sheet which is notched to fit around the bracket located at the top of the antenna array.

d. Procedures. Attach the antenna trailer to the truck by placing the lunette on the pintle hook and securing the latch. Secure the safety chains, cables, and hoses. Position the vehicle on level ground so both the truck and trailer are in a straight line. The following procedures apply to this load:

(1) Preparation. Prepare the load using the following steps:

(a) Fold the mirrors in and tie together with Type III nylon cord. Remove the doors and secure to the seats with Type III nylon cord.

(b) Ensure the shelter is secured to the vehicle with wire rope or tiedown assemblies. Secure all loose equipment inside the shelter with tape, Type III nylon cord, or tiedown straps.

(c) Secure all equipment and cargo inside the truck with tiedown straps, tape, or Type III nylon cord.

(d) Ensure the fuel tank is not over 3/4 full. Inspect the fuel tank cap, oil filler cap, and battery caps for proper installation.

(e) Engage the vehicle parking brake and put the transmission in neutral.

(f) Ensure the front wheels are pointed straight ahead.Tie down the steering wheel, using the securing device attached under the dashboard.

(g) Install the lift provisions on the outer ends of the rear bumper by removing the tiedown provisions located on the front bumper and installing on the outer ends of the rear bumper. Place the lift provisions in the up position.

(h) Pad and tape the trailer A-frame on the areas where the lunette handles are located.

(i) Raise the landing leg and secure in position with safety pins and tape.

(j) Secure all lids, doors, and caps with tape or Type III nylon cord.

(k) Ensure the trailer hand brake is set.

(l) Place the radar set in the travel mode.

(m) Place the sheet of plywood on the top of the antenna, firmly against the BSU. Route and secure a CGU-1/B across the width of the plywood at the center of the array. Hook a second CGU-1/B to the front right tiedown provision located on the front of the right side of the trailer. Route the tiedown diagonally over the plywood and secure the ratchet to the left rear of the stowed ground rod, the lower tiedown provision, or the trailer frame. Repeat the procedure on the left side of the antenna routing the tiedown diagonally over the plywood.

(n) Attach the hook portion of a CGU-1/B tie-down strap down to the left front lift provision on the trailer. Connect the ratchet to the left inside tie-down provision located near the pintle.

(o) Repeat the above procedure on the right side of the load.

(p) Tighten both CGU-1/B tiedown straps at the same time. Secure the excess strap and safety the ratchet handles in the closed position with tape. Tape the CGU-1/B every 24 inches to prevent flapping.

(q) Attach one reach pendant on each sling set apex fitting.

(r) Connect one additional chain length to each chain on each sling set with a coupling link.

(2) Rigging. Rig the load according to the steps in Figure 5-8.

(3) Hookup. Two hookup persons are required for this load. The forward hookup person stands on cab of the truck and places apex fitting 1 onto the forward cargo hook. The aft hookup person stands on the fender of the trailer and places apex fitting 2 onto the aft cargo hook. The hookup team then carefully dismounts the trailer and remains close to the load as the helicopterremoves slack from the sling legs. When successful hookup is assured, the hookup team quickly exits the area underneath the helicopter to the designated rendezvous point.

(4) Derigging. Derigging is the reverse of the preparation and rigging procedures in steps d (1) and d (2).

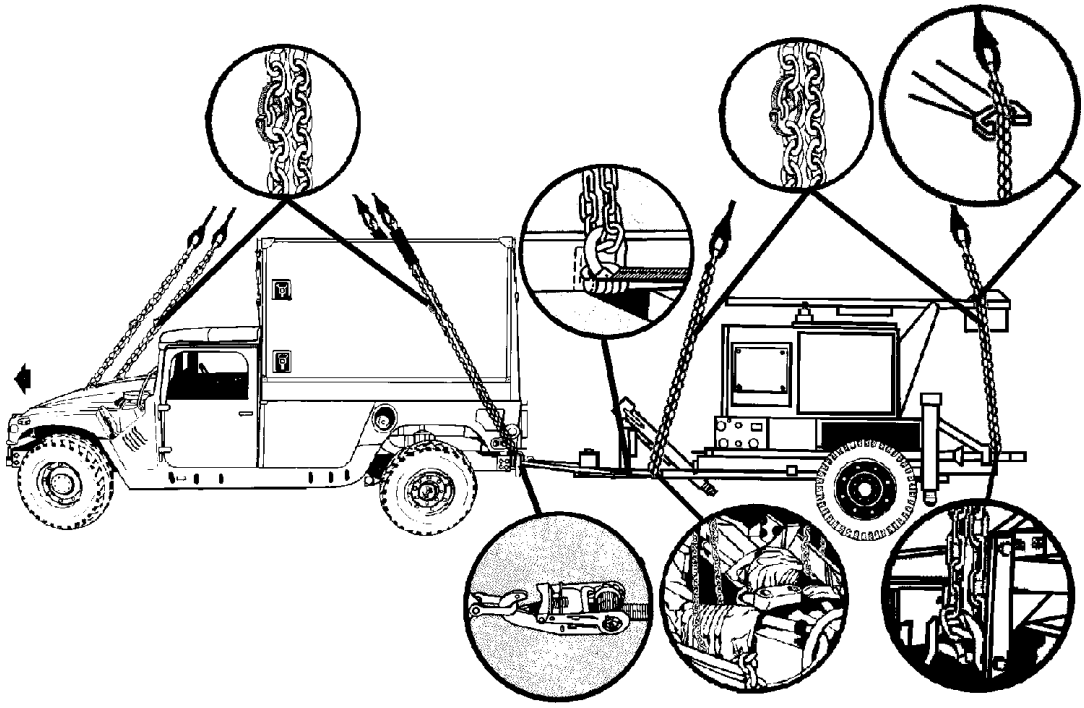

RIGGING STEPS

1. Position apex fitting and reach pendant on top of the shelter. Route outer sling legs 1and 2 to the front of the vehicle and inner sling legs 3 and 4 to the rear. Sling legs 1 and 3 must be on the left side of the load.

2. Loop the chain end of sling leg 1 through the left front lift provision that protrudes through the hood of the truck. Place the correct link from Table 5-8 in the grab hook. Repeat with sling leg 2 and the right front lift provision. Secure excess chain with tape or Type III nylon cord.

3. Loop the chain end of the sling legs through their respective lift provisions located on the outer ends of the rear bumper. Place the correct link from Table 5-8 in the grab hook.

4. Pad the chain where it contacts the shelter sides.

5. Cluster and tie or tape (breakaway technique) all sling legs together on top of the vehicle to prevent entanglement during hookup and lift-off.

6. Position the apex fitting of sling set 2 on top of the trailer but not on top of the radar panel. Route outer sling legs 1and 2 to the front of the trailer and inner sling legs 3 and 4 to the rear of the trailer. Sling legs 1 and 3 must be on the left side of the load.

7. Loop the chain end of sling leg 1 around the left side of the lunette in the padded area inside the handle. Place the correct link from Table 5-8 in the grab hook. Ensure the chain is aft of the CGU-1/B tiedown strap. Repeat with sling leg 2 through the right front lift provision. Secure excess chain with tape or Type III nylon cord.

8. Loop the chain end of sling leg 3 through the left rear lift provision. Place the correct link from Table 5-8 in the grab hook. Remove the slack from the sling leg and pad the sling/chain where it contacts the sling leg guide on the antenna. Place the sling leg in the guide and secure with a breakaway tie. Repeat with sling leg 4 through the right rear lift provision. Secure excess chain with tape or Type III nylon cord.

9. Cluster and tie or tape (breakaway technique) all sling legs together on top of the trailer to prevent entanglement during hookup and lift-off.

Figure 5-8. M1037 Shelter Carrier, 1-1/4 Ton (HMMWV) with AN/TPQ-36, (S-250 Shelter), Operations Control Group and Radar Set Antenna Mounted on M103A1 Trailer

5-10. M1097 Shelter Carrier (HMMWV) with S-250 Shelter and Trailer Generator Sets on M116A2 Trailer

a. Applicability. The following items in Table 5-9 are certified for the helicopter(s) listed in the following table by the US Army Soldier Systems Center:

Table 5-9. M1097 Shelter Carrier (HMMWV) with S-250 Shelter and Trailer Generator Sets on M116A2 Trailer

NOMENCLATURE	MAX WEIGHT (POUNDS)	SLING SET	LINK COUNT FRONT/ REAR	TYPE OF AIRCRAFT	RECOMMENDED AIRSPEED (KNOTS)
Truck, (HMMWV) M1097 with AN/TSC-93A in S-250 Shelter	9,769	25K	64/22	CH-47	110
PU-753 Generator Set on M116A2 Trailer	3,000	25K	72/56	CH-47	110
Truck, (HMMWV) M1097 with S-250 Shelter, LOS (V1)	9,038	25K	60/20	CH-47	120
Truck, (HMMWV) M1097 with S-250 Shelter, LOS (V2)	9,038	25K	60/20	CH-47	120
Truck, (HMMWV) M1097 with S-250 Shelter, LOS (V3)	9,038	25K	60/20	CH-47	120
Truck, (HMMWV) M1097 with S-250 Shelter, LOS (V4)	9,038	25K	60/20	CH-47	120
PU-751 Generator Set on M116A2 Trailer	3,062	25K	10/15	CH-47	120

b. Materials. The following materials are required to rig this load:

(1) Sling set (25,000-pound capacity) (2 each).

(a) Chain length, part number 38850-00053-102, from a 25,000-pound capacity sling set (8 each).

(b) Coupling link, part number 664241, from a 25,000-pound sling set (8 each).

(2) Tape, adhesive, pressure-sensitive, 2-inch wide roll.

(3) Cord, nylon, Type III, 550-pound breaking strength.

(4) Webbing, cotton, 1/4-inch, 80-pound breaking strength.

(5) Strap, cargo, tiedown, CGU-1/B (2 each).

(6) Felt sheet, cattle hair, Type IV, 1/2-inch or suitable substitute.

c. Personnel. Two persons can prepare and rig the M1097 HMMWV in 15 minutes. Two persons can prepare and rig the generator set in 10 minutes.

d. Procedures. Attach the generator set to the truck by placing the lunette on the pintle hook and securing the latch with tape or Type III nylon cord. Secure the safety chains, cables, and hoses. Position the vehicle on level ground so both the truck and generator set are in a straight line. The following procedures apply to this load:

(1) Preparation. Prepare the load using the following steps:

(g) Install the lift provisions on the outer ends of the rear bumper by removing the tiedown provisions located on the front bumper and installing on the outer ends of the front bumper and installing on the outer ends of the rear bumper.

(h) Partially retract all landing legs and secure in position with Type III nylon cord.

(i) Retract the lunette leg and secure with Type III nylon cord.

(j) Secure all lids, doors, and caps with tape or Type III nylon cord.

(k) Ensure the parking brake is set.

(l) Route the hook portion of a CGU-1/B tiedown strap through the left rear inboard tiedown provision located near the pintle on the rear bumper of the truck and through the mounting bracket on the front of the trailer A-frame. Connect the hook to the ratchet of the CGU-1/B.

(m) Repeat the above procedure on the right side of the load.

(n) Tighten both CGU-1/B tie-down straps at the same time. Secure the excess strap and safety the ratchet handles in the closed position with tape.

(o) Connect one additional chain length to each chain on each sling set with a coupling link.

(2) Rigging. Rig the load according to the steps in Figure 5-9.

(3) Hookup. Two hookup teams are required for this load. The static wand person discharges the static electricity with the static wand. The forward hookup person kneels on top of the shelter and places apex fitting 1 onto the forward cargo hook. The aft hookup person stands on the generator fender and places apex fitting 2 onto the aft cargo hook. The hookup team then carefully dismounts the trailer and remains close to the load as the helicopter removes slack from the sling legs. When successful hookup is assured, the hookup team quickly exits the area underneath the helicopter to the designated rendezvous point.

(4) Derigging. Derigging is the reverse of the preparation and rigging procedures in steps d (1) and d (2).

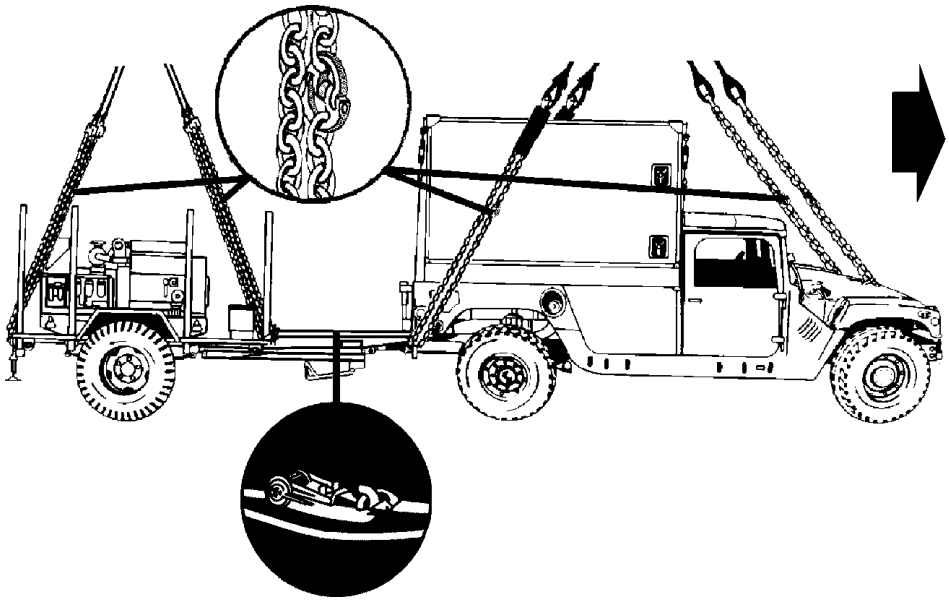

Figure 5-9. M1097 Shelter Carrier with AN/TSC-93A, S250 Shelter, and PU753 Generator on M116A2 Trailer

RIGGING STEPS

1. Position apex fitting on top of the shelter. Route outer sling legs 1and 2 to the front of the vehicle and inner sling legs 3 and 4 to the rear. Sling legs 1 and 3 must be on the left side of the load.

2. Loop the chain end of sling leg 1 through the left front lift provision that protrudes through the hood from inboard to outboard. Place the correct link from Table 5-9 in the grab hook. Repeat with sling leg 2 and the right front lift provision. Secure excess chain with tape or Type III nylon cord.

3. Loop the chain end of the sling legs through their respective lift provisions located on the outer ends of the rear bumper. Place the correct link from Table 5-9 in the grab hook. Secure excess chain with tape or Type III nylon cord.

4. Pad the chain where it contacts the shelter sides.

5. Cluster and tie or tape (breakaway technique) all sling legs together on top of the vehicle to prevent entanglement during hookup and lift-off.

6. Position the apex fitting of sling set 2 on top of the generator set. Route outer sling legs 1and 2 between the two front bows to the front of the generator and inner sling legs 3 and 4 between the two rear bows to the rear of the generator. Sling legs 1 and 3 must be on the left side of the load.

7. Loop the chain end of sling leg 1 through the left front lift provision located on the front of the trailer. Place the correct link from Table 5-9 in the grab hook. Repeat with sling leg 2 through the right front lift provision. Secure excess chain with tape or Type III nylon cord.

8. Loop the chain end of sling leg 3 through the left rear lift provision. Place the correct link from Table 5-9 in the grab hook. Repeat with sling leg 4 through the right rear lift provision. Secure excess chain with tape or Type III nylon cord.

9. Cluster and tie or tape (breakaway technique) all sling legs together on top of the trailer to prevent entanglement during hookup and lift-off.

Figure 5-9. M1097 Shelter Carrier with AN/TSC-93A, S250 Shelter, and PU753 Generator on M116A2 Trailer (continued)

5-11. M1097 (HMMWV) with AN/TSQ-183, Counter Battery Radar and MEP802A Generator on M116A3 Trailer

a. Applicability. The following items in Table 5-10 are certified for the helicopter(s) listed in the following table by the US Army Soldier Systems Center:

Table 5-10. M1097 with AN/TSQ-183 Counter Battery Radar and MEP802A Generator on M116A3 Trailer

NOMENCLATURE	MAX WEIGHT (POUNDS)	SLING SET	LINK COUNT FRONT/ REAR	TYPE OF AIRCRAFT	RECOMMENDED AIRSPEED (KNOTS)
Truck, 1 1/4-ton, HMMWV with AN/TSQ-183 Counter Battery Radar	8,500	10K	80/3	CH-47	120
MEP802A Generator on M116A3 Trailer	1,580	10K	15/20	CH-47	120

b. Materials. The following materials are required to rig this load:

(1) Sling set (10,000-pound capacity) (2 each).

(2) Tape, adhesive, pressure-sensitive, 2-inch wide roll.

(3) Cord, nylon, Type III, 550-pound breaking strength.

(4) Webbing, cotton, 1/4-inch, 80-pound breaking strength.

(5) Strap, cargo, tiedown, CGU-1/B (4 each).

(6) Felt sheet, cattle hair, Type IV, 1/2-inch or suitable substitute.

c. Personnel. Two persons can prepare and rig the M1097 HMMWV in 15 minutes. Two persons can prepare and rig the generator set in 10 minutes.

d. Procedures. Attach the generator set to the truck by placing the lunette on the pintle hook and securing the latch with tape or Type III nylon cord. Secure the safety chains, cables, and hoses. Position the vehicle on level ground so both the truck and generator set are in a straight line. The following procedures apply to this load:

(1) Preparation. Prepare the load using the following steps:

(a) Fold mirrors inward and tie together with Type III nylon cord. Remove the doors and secure to the seats with Type III nylon cord.

(b) Roll the shelter canvas forward toward the cab. Install the canvas bows over the canvas and secure with tiedowns or Type III nylon cord.

(c) Secure all equipment and cargo inside the truck with tiedown straps, tape, or Type III nylon cord.

(d) Ensure the fuel tanks are not over 3/4 full. Inspect the fuel tank cap, oil filler cap, and battery caps for proper installation.

(e) Engage the vehicle parking brake and put the transmission in neutral.

(f) Ensure the front wheels are pointed straight ahead. Tie down the steering wheel, using the securing device attached under the dashboard.

(g) Install the lift provisions on the outer ends of the rear bumper by removing the tiedown provisions located on the front bumper and installing on the outer ends of the front bumper and installing on the outer ends of the rear bumper.

(h) Retract the lunette leg and secure with Type III nylon cord.

(i) Secure all lids, doors, and caps with tape or Type III nylon cord.

(j) Ensure the parking brake is set.

(k) Route the hook portion of a CGU-1/B tiedown strap through the left rear inboard tiedown provision located near the pintle on the rear bumper of the truck and through the mounting bracket on the front of the trailer A-frame. Connect the hook to the ratchet of the CGU-1/B.

(l) Repeat the above procedure on the right side of the load.

(m) Tighten both CGU-1/B tiedown straps at the same time. Secure the excess strap and safety the ratchet handles in the closed position with tape.

(2) Rigging. Rig the load according to the steps in Figure 5-10.

(3) Hookup. Two hookup teams are required for this load. The static wand person discharges the static electricity with the static wand. The forward hookup person kneels on top of the vehicle and places apex fitting 1 onto the forward cargo hook. The aft hookup person stands on the generator fender and places apex fitting 2 onto the aft cargo hook. The hookup team then carefully dismounts the trailer and remains close to the load as the helicopter removes slack from the sling legs. When successful hookup is assured, the hookup team quickly exits the area underneath the helicopter to the designated rendezvous point.

(4) Derigging. Derigging is the reverse of the preparation and rigging procedures in steps d (1) and d (2).

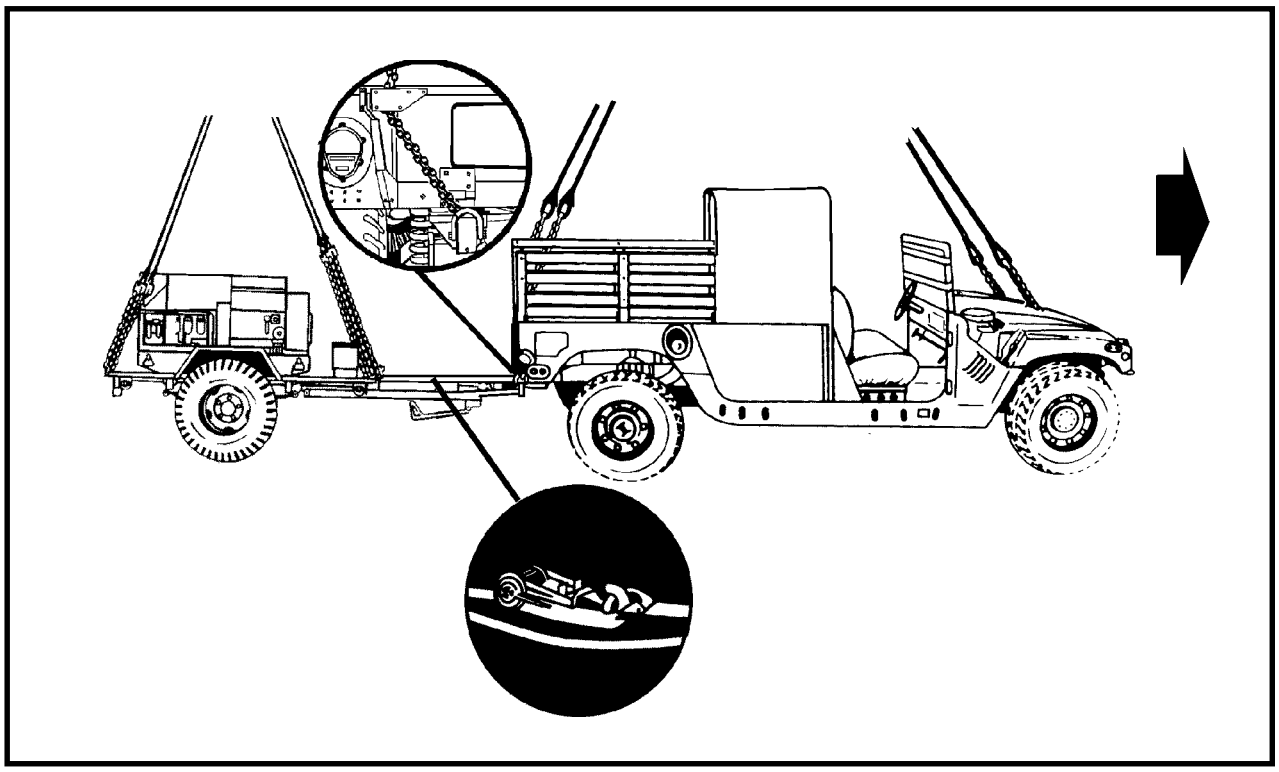

Figure 5-10. M1097 with AN/TSQ-183 Counter Battery Radar and MEP802A Generator on M116A3 Trailer

RIGGING STEPS

1. Position apex fitting on top of the truck. Route outer sling legs 1and 2 to the front of the vehicle and inner sling legs 3 and 4 to the rear. Sling legs 1 and 3 must be on the left side of the load.

2. Loop the chain end of sling leg 1 through the left front lift provision that protrudes through the hood of the vehicle. Place the correct link from Table 5-10 in the grab hook. Repeat with sling leg 2 and the right front lift provision. Secure excess chain with tape or Type III nylon cord.

3. Route the chain end of sling leg 3 through the eyelet opening in the upper left corner of the tailgate. Loop the chain end through the left lift provision on the bumper and thread back through the eyelet opening in the tailgate. Place the correct link from Table 5-10 in the grab hook. Repeat with sling leg 4 and the right rear lift provision.

4. Cluster and tie or tape (breakaway technique) all sling legs together on top of the vehicle to prevent entanglement during hookup and lift-off.

5. Position the apex fitting of sling set 2 on top of the generator set. Route outer sling legs 1and 2 to the front of the generator and inner sling legs 3 and 4 to the rear of the generator. Sling legs 1 and 3 must be on the left side of the load.

6. Loop the chain end of sling leg 1 through the left front lift provision located on the front of the trailer. Place the correct link from Table 5-10 in the grab hook. Repeat with sling leg 2 through the right front lift provision. Secure excess chain with tape or Type III nylon cord.

7. Loop the chain end of sling leg 3 through the left rear lift provision. Place the correct link from Table 5-10 in the grab hook. Repeat with sling leg 4 through the right rear lift provision. Secure excess chain with tape or Type III nylon cord.

8. Pad the chains where they contact the loads.

9. Cluster and tie or tape (breakaway technique) all sling legs together on top of the trailer to prevent entanglement during hookup and lift-off.

Figure 5-10. M1097 with AN/TSQ-183 Counter Battery Radar and MEP802A Generator on M116A3 Trailer (continued)

5-12. M1097 (HMMWV) with AN/TSQ-183, Counter Battery Radar and M101A2 Trailer

a. Applicability. The following items in Table 5-11 are certified for the helicopter(s) listed in the following table by the US Army Soldier Systems Center:

Table 5-11. M1097 with AN/TSQ-183 Counter Battery Radar and M101A2 Trailer

NOMENCLATURE	MAX WEIGHT (POUNDS)	SLING SET	LINK COUNT FRONT/ REAR	TYPE OF AIRCRAFT	RECOMMENDED AIRSPEED (KNOTS)
Truck, 1 1/4-ton, HMMWV with AN/TSQ-183 Counter Battery Radar	8,500	10K	80/3	CH-47	120
M101A2 Trailer	2,300	10K	15/20	CH-47	120

b. Materials. The following materials are required to rig this load:

(1) Sling set (10,000-pound capacity) (2 each).

(2) Tape, adhesive, pressure-sensitive, 2-inch wide roll.

(3) Cord, nylon, Type III, 550-pound breaking strength.

(4) Webbing, cotton, 1/4-inch, 80-pound breaking strength.

(5) Strap, cargo, tiedown, CGU-1/B (4 each).

(6) Felt sheet, cattle hair, Type IV, 1/2-inch or suitable substitute.

c. Personnel. Two persons can prepare and rig the M1097 HMMWV in 15 minutes. Two persons can prepare and rig the generator set in 10 minutes.

d. Procedures. Attach the trailer to the truck by placing the lunette on the pintle hook and securing the latch with tape or Type III nylon cord. Secure the safety chains, cables, and hoses. Position the vehicle on level ground so both the truck and trailer are in a straight line. The following procedures apply to this load:

(1) Preparation. Prepare the load using the following steps:

(a) Fold mirrors inward and tie together with Type III nylon cord. Remove the doors and secure to the seats with Type III nylon cord.

(b) Roll the shelter canvas forward toward the cab. Install the canvas bows over the canvas and secure with tiedowns or Type III nylon cord.

(c) Secure all equipment and cargo inside the truck with tie down straps, tape, or Type III nylon cord.

(d) Ensure the fuel tank is not over 3/4 full. Inspect the fuel tank cap, oil filler cap, and battery caps for proper installation.

(e) Engage the vehicle parking brake and put the transmission in neutral.

(f) Ensure the front wheels are pointed straight ahead. Tie down the steering wheel, using the securing device attached under the dashboard.

(g) Install the lift provisions on the outer ends of the rear bumper by removing the tiedown provisions located on the front bumper and installing on the outer ends of the front bumper and installing on the outer ends of the rear bumper.

(h) Retract the lunette leg and secure with Type III nylon cord.

(i) Ensure the parking brake is set.

(j) Remove the trailer rack and place in the bed of the trailer. Place the cargo on top of the rack and secure with CGU-1/B cargo straps by routing the strap diagonally over the cargo.

(k) Place the trailer tailgate in the open position and hook the chain in the keeper.

(l) Route a CGU-1/B tiedown strap around the bumper on the left side of the rear bumper of the truck, back to and around the left side of the trailer axle. Do not interfere with the hydraulic lines or brake cable on the axle. Attach the hook portion and the ratchet of the CGU-1/B together.

(m) Repeat the above procedure on the right side of the load.

(n) Tighten both CGU-1/B tiedown straps at the same time. Secure the excess strap and safety the ratchet handles in the closed position with tape.

(2) Rigging. Rig the load according to the steps in Figure 5-11.

(3) Hookup. Two hookup teams are required for this load. The static wand person discharges the static electricity with the static wand. The forward hookup person kneels on top of the vehicle and places apex fitting 1 onto the forward cargo hook. The aft hookup person stands on the generator fender and places apex fitting 2 onto the aft cargo hook. The hookup team then carefully dismounts the trailer and remains close to the load as the helicopter removes slack from the sling legs. When successful hookup is assured, the hookup team quickly exits the area underneath the helicopter to the designated rendezvous point.

(4) Derigging. Derigging is the reverse of the preparation and rigging procedures in steps d (1) and d (2).

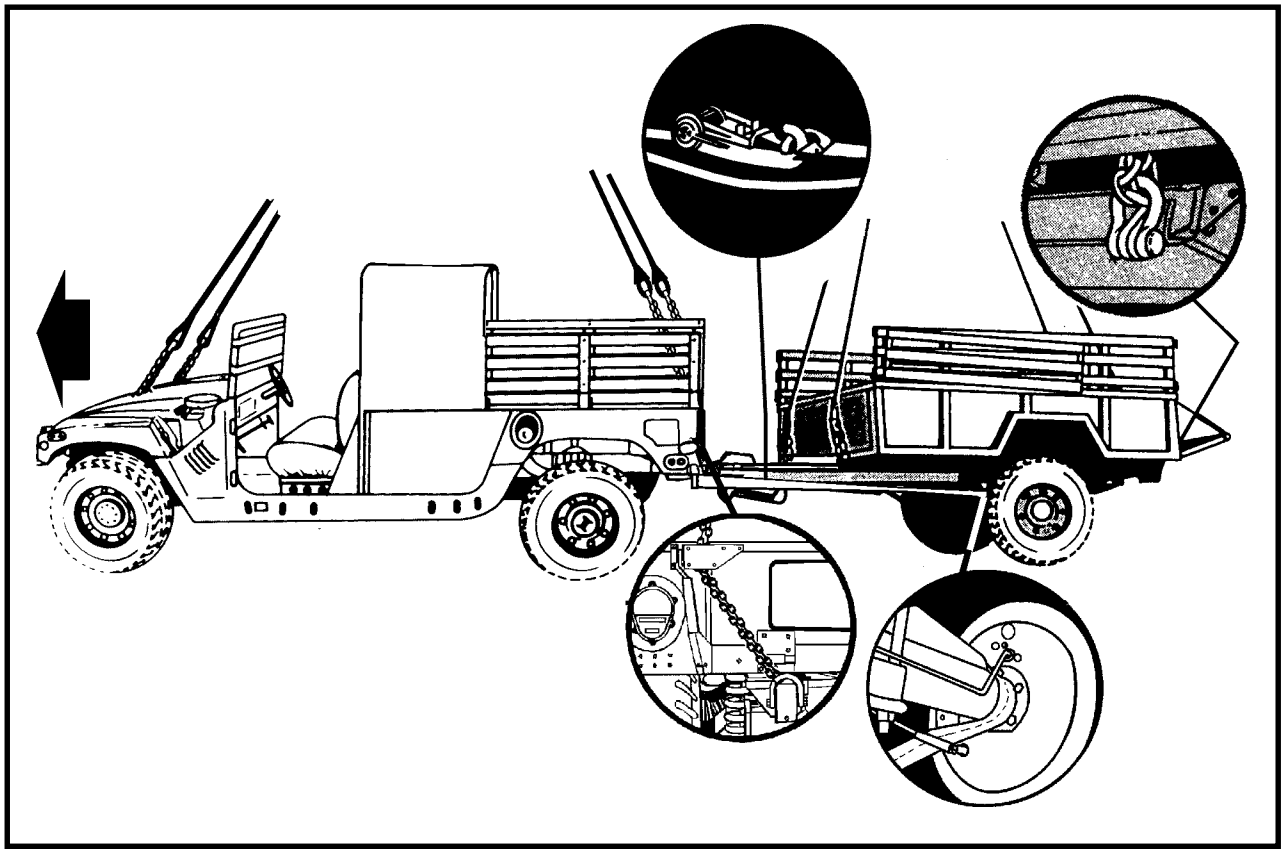

Figure 5-11. M1097 with AN/TSQ-183 Counter Battery Radar and M101A2 Trailer

RIGGING STEPS

1. Position apex fitting on top of the truck. Route outer sling legs 1and 2 to the front of the vehicle and inner sling legs 3 and 4 to the rear. Sling legs 1 and 3 must be on the left side of the load.

2. Loop the chain end of sling leg 1 through the left front lift provision that protrudes through the hood of the vehicle. Place the correct link from Table 5-11 in the grab hook. Repeat with sling leg 2 and the right front lift provision. Secure excess chain with tape or Type III nylon cord.

3. Route the chain end of sling leg 3 through the eyelet opening in the upper left corner of the tailgate. Loop the chain end through the left lift provision on the bumper and thread back through the eyelet opening in the tailgate. Place the correct link from Table 5-11 in the grab hook. Repeat with sling leg 4 and the right rear lift provision.

4. Cluster and tie or tape (breakaway technique) all sling legs together on top of the vehicle to prevent entangleent during hookup and lift-off.

5. Position the apex fitting of sling set 2 on top of the trailer. Route outer sling legs 1and 2 to the front of the trailer and inner sling legs 3 and 4 to the rear of the trailer. Sling legs 1 and 3 must be on the left side of the load.

6. Loop the chain end of sling leg 1 through the left front lift provision located on the front of the trailer. Place the correct link from Table 5-11 in the grab hook. Repeat with sling leg 2 through the right front lift provision. Secure excess chain with tape or Type III nylon cord.

7. Loop the chain end of sling leg 3 through the left rear lift provision. Place the correct link from Table 5-11 in the grab hook. Repeat with sling leg 4 through the right rear lift provision. Secure excess chain with tape or Type III nylon cord.

8. Pad the chains where they contact the loads.

9. Cluster and tie or tape (breakaway technique) all sling legs together on top of the trailer to prevent entanglement during hookup and lift-off.

Figure 5-11. M1097 with AN/TSQ-183 Counter Battery Radar and M101A2 Trailer (continued)

5-13. Joint Surveillance Target Attack Radar (JSTAR) System, M1097 (HMMWV) Mission Vehicle with LMS Shelter and Mission Trailer, HMT with Generator

a. Applicability. The following items in Table 5-12 are certified for the helicopter(s) listed in the following table by the US Army Soldier Systems Center:

Table 5-12. JSTAR Mission Vehicle and Mission Trailer

NOMENCLATURE	MAX WEIGHT (POUNDS)	SLING SET	LINK COUNT FRONT/ REAR	TYPE OF AIRCRAFT	RECOMMENDED AIRSPEED (KNOTS)
JSTAR Mission Vehicle, M1097 with LMS Shelter	9,530	10K	60/10	CH-47	120
JSTAR Mission Trailer, HMT with Generator Set	3,960	10K	40/40	CH-47	120

b. Materials. The following materials are required to rig this load:

(1) Sling set (10,000-pound capacity) (2 each).

(a) Chain length, part number 38850-00053-101, from a 10,000-pound capacity sling set (8 each).

(b) Coupling link, part number 577-0615, from a 10,000-pound sling set (8 each).

(2) Tape, adhesive, pressure-sensitive, 2-inch wide roll.

(3) Cord, nylon, Type III, 550-pound breaking strength.

(4) Webbing, cotton, 1/4-inch, 80-pound breaking strength.

(5) Strap, cargo, tiedown, CGU-1/B (2 each).

(6) Felt sheet, cattle hair, Type IV, 1/2-inch or suitable substitute.

c. Personnel. Two persons can prepare and rig the M1097 HMMWV in 15 minutes. Two persons can prepare and rig the generator set in 10 minutes.

d. Procedures. Attach the generator set to the truck by placing the lunette on the pintle hook and securing the latch with tape or Type III nylon cord. Secure the safety chains, cables, and hoses. Position the vehicle on level ground so both the truck and generator set are in a straight line. The following procedures apply to this load:

(1) Preparation. Prepare the load using the following steps:

(a) Fold mirrors inward and tie together with Type III nylon cord. Remove the doors and secure to the seats with Type III nylon cord.

(b) Remove the two transfer cases from the trailer and stow and secure inside the shelter. Secure all loose equipment inside the shelter with tape, Type III nylon cord, or tiedown straps.

(c) Secure all equipment and cargo inside the truck with tiedown straps, tape, or Type III nylon cord.

(d) Ensure the fuel tanks are not over 3/4 full. Inspect the fuel tank cap, oil filler cap, and battery caps for proper installation.

(e) Engage the vehicle parking brake and put the transmission in neutral.

(f) Ensure the front wheels are pointed straight ahead. Tie down the steering wheel, using the securing device attached under the dashboard.

(g) Install the lift provisions on the outer ends of the rear bumper by removing the tiedown provisions located

on the front bumper and installing on the outer ends of the front bumper and installing on the outer ends of the rear bumper.

(h) Retract the lunette leg and secure with Type III nylon cord.

(i) Secure all lids, doors, and caps with tape or Type III nylon cord.

(j) Ensure the parking brake is set.

(k) Route the hook portion of a CGU-1/B tiedown strap through the left rear inboard tie down provision located near the pintle on the rear bumper of the truck. Loop the tiedown through the left front trailer lift provision located on the left front of the trailer. Attach the hook portion of the tiedown strap to the ratchet.

NOTE: Do not attach the tiedown strap to the rear wheels of the vehicle. The rear wheels may rotate during flight causing slack in the straps.

(l) Repeat the above procedure on the right side of the load.

(m) Tighten both CGU-1/B tiedown straps at the same time. Secure the excess strap and safety the ratchet handles in the closed position with tape.

(n) Connect one additional chain length to each chain on each sling set with a coupling link.

(2) Rigging. Rig the load according to the steps in Figure 5-12.

(3) Hookup. Two hookup teams are required for this load. The static wand person discharges the static electricity with the static wand. The forward hookup person kneels on top of the shelter and places apex fitting 1 onto the forward cargo hook. The aft hookup person kneels on top of the generator and places apex fitting 2 onto the aft cargo hook. The hookup team then carefully dismounts the trailer and remains close to the load as the helicopter removes slack from the sling legs. When successful hookup is assured, the hookup team quickly exits the area underneath the helicopter to the designated rendezvous point.

(4) Derigging. Derigging is the reverse of the preparation and rigging procedures in steps d (1) and d (2).

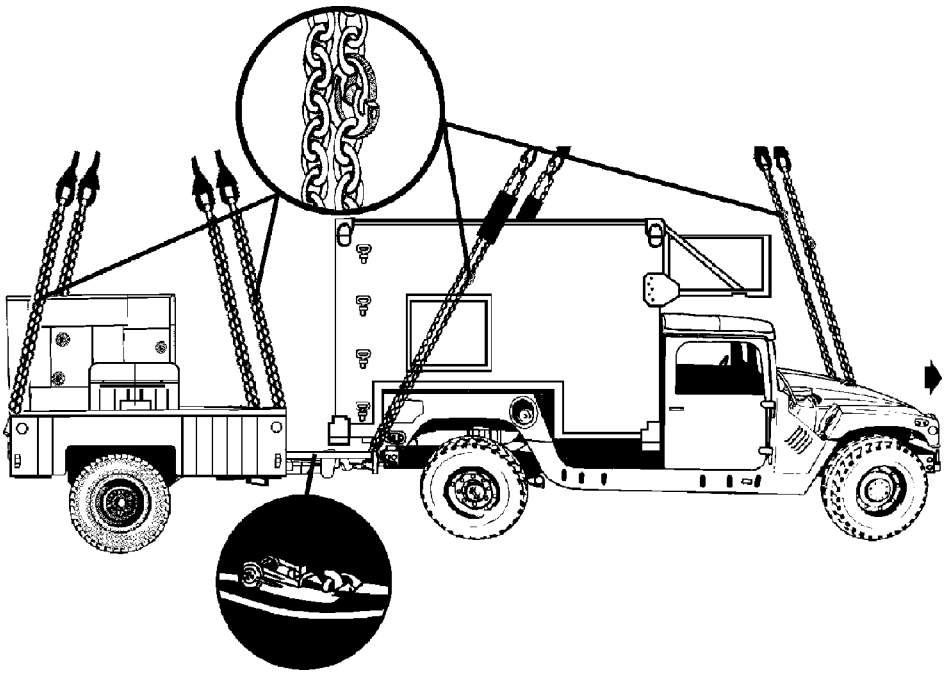

RIGGING STEPS

1. Position apex fitting on top of the shelter. Route outer sling legs 1and 2 to the front of the vehicle and inner sling legs 3 and 4 to the rear. Sling legs 1 and 3 must be on the left side of the load.

2. Loop the chain end of sling leg 1 through the left front lift provision that protrudes through the hood from inboard to outboard. Place the correct link from Table 5-12 in the grab hook. Repeat with sling leg 2 and the right front lift provision. Secure excess chain with tape or Type III nylon cord.

3. Loop the chain end of the sling legs through their respective lift provisions located on the outer ends of the rear bumper. Place the correct link from Table 5-12 in the grab hook. Secure excess chain with tape or Type III nylon cord.

4. Pad the chain where it contacts the shelter sides.

5. Cluster and tie or tape (breakaway technique) all sling legs together on top of the vehicle to prevent entanglement during hookup and lift-off.

6. Position the apex fitting of sling set 2 on top of the generator set. Route outer sling legs 1and 2 to the front of the generator and inner sling legs 3 and 4 to the rear of the generator. Sling legs 1 and 3 must be on the left side of the load.

7. Loop the chain end of sling leg 1 through the left front lift provision located on the front of the trailer. Place the correct link from Table 5-12 in the grab hook. Repeat with sling leg 2 through the right front lift provision. Secure excess chain with tape or Type III nylon cord.

8. Loop the chain end of sling leg 3 through the left rear lift provision. Place the correct link from Table 5-12 in the grab hook. Repeat with sling leg 4 through the right rear lift provision. Secure excess chain with tape or Type III nylon cord.

9. Cluster and tie or tape (breakaway technique) all sling legs together on top of the trailer to prevent entanglement during hookup and lift-off.

Figure 5-12. Joint Surveillance Target Attack Radar (JSTAR) System, M1097 (HMMWV) Mission Vehicle with LMS Shelter and Mission Trailer, HMT with Generator

5-14. M1097 Shelter Carrier, 1-1/4 Ton (HMMWV) with AN/TPQ-36(V)7, (S-250 Shelter), Operations Control Group, OKG-398/TPW, and M116A2 Equipment Trailer Group

a. Applicability. The following items in Table 5-13 are certified for the helicopter(s) listed in the following table by the US Army Soldier Systems Center:

Table 5-13. M1097 Shelter Carrier, 1-1/4 Ton (HMMWV) with AN/TPQ-36(V)7, (S-250 Shelter), Operations Control Group, OKG-398/TPW, and M116A2 Equipment Trailer Group

NOMENCLATURE	MAX WEIGHT (POUNDS)	SLING SET	LINK COUNT FRONT/ REAR	TYPE OF AIRCRAFT	RECOMMENDED AIRSPEED (KNOTS)
Truck, Shelter Carrier, 1 1/4-Ton, M1097 with OKG-398/TPW, Operations Control Group, (S-250 Shelter)	8,500	10K	80/5	CH-47	120
Equipment Trailer Group, M116A2	2,300	10K	90/70	CH-47	120

b. Materials. The following materials are required to rig this load:

(1) Sling set (10,000-pound capacity) (2 each).

(a) Chain length, part number 38850-00053-101, from a 10,000-pound capacity sling set (8 each).

(b) Coupling link, part number 577-0615, from a 10,000-pound sling set (8 each).

(2) Tape, adhesive, pressure-sensitive, 2-inch wide roll.

(3) Cord, nylon, Type III, 550-pound breaking strength.

(4) Webbing, cotton, 1/4-inch, 80-pound breaking strength.

(5) Strap, cargo, tiedown, CGU-1/B (2 each, or more as required to secure cargo).

(6) Felt sheet, cattle hair, Type IV, 1/2-inch or suitable substitute.

c. Personnel. Two persons can prepare and rig the M1097 HMMWV in 15 minutes. Two persons can prepare and rig the trailer in 15 minutes.

d. Procedures. Attach the trailer to the truck by placing the lunette on the pintle hook and securing the latch. Secure the safety chains, cables, and hoses. Position the vehicle on level ground so both the truck and trailer are in a straight line. The following procedures apply to this load:

(1) Preparation. Prepare the load using the following steps:

(a) Fold the mirrors in and tie together with Type III nylon cord. Remove the doors and secure to the seats with Type III nylon cord.

(b) Secure all loose equipment inside the shelter with tape, Type III nylon cord, or tiedown straps.

(c) Secure all equipment and cargo inside the truck with tiedown straps, tape, or Type III nylon cord.

(d) Ensure the fuel tank is not over 3/4 full. Inspect the fuel tank cap, oil filler cap, and battery caps for proper installation.

(e) Engage the vehicle parking brake and put the transmission in neutral.

(f) Ensure the front wheels are pointed straight ahead.Tie down the steering wheel, using the securing device attached under the dashboard.

(g) Install the lift provisions on the outer ends of the rear bumper by removing the tiedown provisions located on the front bumper and installing on the outer ends of the rear bumper.

(h) Raise the landing leg and secure in position with safety pins and tape.

(i) Ensure the trailer hand brake is set.

(j) Secure the equipment, canvas, and bows in the bed of the trailer with tiedown straps. Route the straps diagonally over the equipment from front to rear.

(k) Route the hook portion of a CGU-1/B tiedown strap through the left rear inboard tiedown provision located near the pintle on the rear bumper of the truck and through the mounting bracket on the front of the trailer A-frame. Connect the hook to the ratchet of the CGU-1/B.

(l) Repeat the above procedure on the right side of the load.

(m) Tighten both CGU-1/B tiedown straps at the same time. Secure the excess strap and safety the ratchet handles in the closed position with tape. Tape the CGU-1/B tiedown strap every 24 inches to prevent flapping.

(n) Connect one additional chain length to each chain on each sling set with a coupling link.

(2) Rigging. Rig the load according to the steps in Figure 5-13.

(3) Hookup. Two hookup persons are required for this load. The forward hookup person stands on cab of the truck and places apex fitting 1 onto the forward cargo hook. The aft hookup person stands on the fender of the trailer and places apex fitting 2 onto the aft cargo hook. The hookup team then carefully dismounts the trailer and remains close to the load as the helicopter removes slack from the sling legs. When successful hookup is assured, the hookup team quickly exits the area underneath the helicopter to the designated rendezvous point.

(4) Derigging. Derigging is the reverse of the preparation and rigging procedures in steps d (1) and d (2).

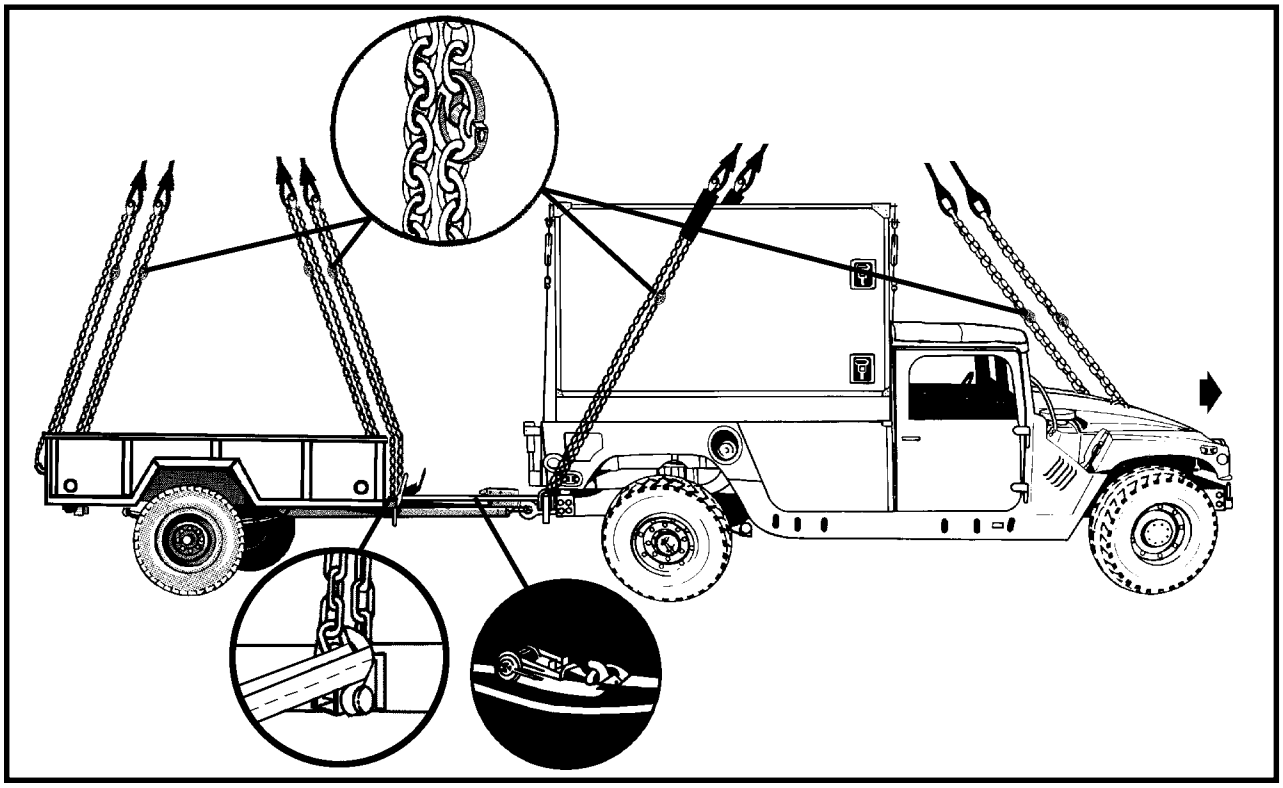

Figure 5-13. M1097 Shelter Carrier, 1-1/4 Ton (HMMWV) with AN/TPQ-36(V)7, (S-250 Shelter), Operations Control Group, OKG-398/TPW, and M116A2 Equipment Trailer Group

RIGGING STEPS

1. Position apex fitting on top of the truck. Route outer sling legs 1and 2 to the front of the vehicle and inner sling legs 3 and 4 to the rear. Sling legs 1 and 3 must be on the left side of the load.

2. Loop the chain end of sling leg 1 through the left front lift provision that protrudes through the hood from inboard to outboard. Place the correct link from Table 5-13 in the grab hook. Repeat with sling leg 2 and the right front lift provision. Secure excess chain with tape or Type III nylon cord.

3. Loop the chain end of the sling legs through their respective lift provisions located on the outer ends of the rear bumper. Place the correct link from Table 5-13 in the grab hook.

4. Pad the chain where it contacts the shelter sides.

5. Cluster and tie or tape (breakaway technique) all sling legs together on top of the vehicle to prevent entanglement during hookup and lift-off.

6. Position the apex fitting of sling set 2 on top of the trailer. Route outer sling legs 1and 2 to the front of the trailer and inner sling legs 3 and 4 to the rear of the trailer. Sling legs 1 and 3 must be on the left side of the load.

7. Loop the chain end of sling leg 1 through the left front lift provision located on the front of the trailer. Place the correct link from Table 5-13 in the grab hook. Repeat with sling leg 2 through the right front lift provision. Secure excess chain with tape or Type III nylon cord.

8. Loop the chain end of sling leg 3 through the left rear lift provision. Place the correct link from Table 5-13 in the grab hook. Repeat with sling leg 4 through the right rear lift provision. Secure excess chain with tape or Type III nylon cord.

9. Cluster and tie or tape (breakaway technique) all sling legs together on top of the trailer to prevent entanglement during hookup and lift-off.

Figure 5-13. M1097 Shelter Carrier, 1-1/4 Ton (HMMWV) with AN/TPQ-36(V)7, (S-250 Shelter), Operations Control Group, OKG-398/TPW, and M116A2 Equipment Trailer Group (continued)

5-15. M998/M1038, 1-1/4 Ton Truck, Cargo (HMMWV) and M167 Gun (Vulcan)

a. Applicability. The following items in Table 5-14 are certified for the helicopter(s) listed in the following table by the US Army Soldier Systems Center:

Table 5-14. M998/M1038, 1-1/4 Ton Truck, Cargo (HMMWV) and M167 Gun (Vulcan)

NOMENCLATURE	MAX WEIGHT (POUNDS)	SLING SET	LINK COUNT FRONT/ REAR	TYPE OF AIRCRAFT	RECOMMENDED AIRSPEED (KNOTS)
Truck, Cargo, 1 1/4-Ton, M998/M1038 with Accompanying Load	7,600	10K	80/3	CH-47	130
Gun, AA, Towed,20-mm, M167	3,400	10K	20/90	CH-47	130

b. Materials. The following materials are required to rig this load:

(1) Sling set (10,000-pound capacity) (2 each).

(2) Tape, adhesive, pressure-sensitive, 2-inch wide roll.

(3) Cord, nylon, Type III, 550-pound breaking strength.

(4) Webbing, cotton, 1/4-inch, 80-pound breaking strength.

(5) Strap, cargo, tiedown, CGU-1/B (2 each, or more as required to secure cargo).

c. Personnel. Two persons can prepare and rig the M998/M1038 HMMWV in 15 minutes. Two persons can prepare and rig the M167 gun in 10 minutes.

d. Procedures. Attach the gun to the truck by placing the lunette on the pintle hook and securing the latch. Secure the safety chains, cables, and hoses. Position the vehicle on level ground so both the truck and gun are in a straight line. The following procedures apply to this load:

(1) Preparation. Prepare the load using the following steps:

(a) Fold the mirrors in and tie together with Type III nylon cord. Remove the doors and secure to the seats with Type III nylon cord.

(b) Remove the radio antenna and secure all equipment and cargo inside the truck with tiedown straps, tape, or Type III nylon cord.

(c) Ensure the fuel tank is not over 3/4 full. Inspect the fuel tank cap, oil filler cap, and battery caps for proper installation.

(d) Engage the vehicle parking brake and put the transmission in neutral.

(e) Ensure the front wheels are pointed straight ahead.Tie down the steering wheel, using the securing device attached under the dashboard.

(f) Secure the brake light cable to the drawbar on the gun. Place the radar in the upright position. Engage the handbrakes on the gun.

(g) Attach the hook portion of a CGU-1/B tiedown strap to the anchored U-bolt on the left underside of the truck and the ratchet end of the strap to the anchored U-bolt on the left forward part of the gun frame.

(h) Repeat the above procedure on the right side of the load.

(i) Tighten both CGU-1/B tiedown straps at the same time. Secure the excess strap and safety the ratchet handles in the closed position with tape.

(2) Rigging. Rig the load according to the steps in Figure 5-14.

(3) Hookup. Two hookup persons are required for this load. The static wand person discharges the static electricity with the static wand. The forward hookup person stands in the bed of the truck and places apex fitting 1 onto the forward cargo hook. The aft hookup person stands on the frame of the trailer on the same side as the radar dish and places apex fitting 2 onto the aft cargo hook. The hookup team then carefully dismounts the load and remains close to the load as the helicopter removes slack from the sling legs. When successful hookup is assured, the hookup team quickly exits the area underneath the helicopter to the designated rendezvous point.

(4) Derigging. Derigging is the reverse of the preparation and rigging procedures in steps d (1) and d (2).

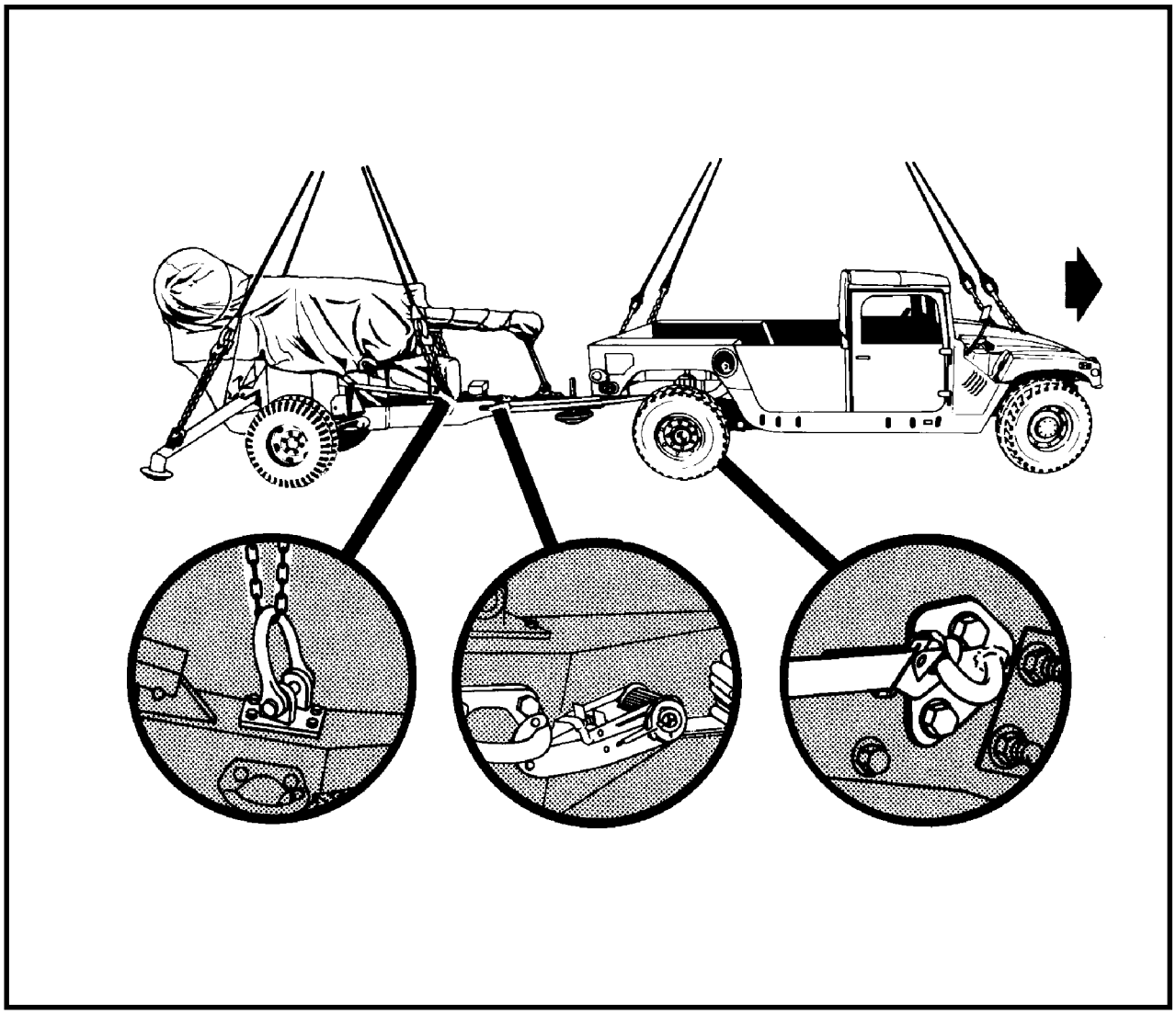

Figure 5-14. M998/1038, 1-1/4 Ton Truck, Cargo (HMMWV) and M167 Gun (Vulcan)

RIGGING STEPS

1. Position apex fitting on top of the truck. Route outer sling legs 1and 2 to the front of the vehicle and inner sling legs 3 and 4 to the rear. Sling legs 1 and 3 must be on the left side of the load.

2. Loop the chain end of sling leg 1 through the left front lift provision that protrudes through the hood of the vehicle. Place the correct link from Table 5-14 in the grab hook. Repeat with sling leg 2 and the right front lift provision. Secure excess chain with tape or Type III nylon cord.

3. Route the chain end of sling leg 3 through the eyelet opening in the upper left corner of the tailgate. Loop the chain end through the left lift provision on the bumper and thread back through the eyelet opening in the tailgate. Place the correct link from Table 5-14 in the grab hook.

4. Cluster and tie or tape (breakaway technique) all sling legs together on top of the vehicle to prevent entanglement during hookup and lift-off.

5. Position the apex fitting of sling set 2 on top of the gun. Route outer sling legs 1and 2 to the rear extended trails and inner sling legs 3 and 4 to the tongue end. Sling legs 1 and 3 must be on the same side of the load. Sling legs 1 and 2 are routed to the rear because the lift provisions on the rear trails are wider apart than the lifting provisions on the tongue.

6. Loop the chain end of sling leg 1 through the lift provision on the left trail. Place the correct link from Table 5-14 in the grab hook. Repeat with sling leg 2 on the right trail lift provision. Secure excess chain with tape or Type III nylon cord.

7. Loop the chain end of sling leg 3 through the lift provision located on the left side of the tongue. Place the correct link from Table 5-14 in the grab hook. Repeat with sling leg 4 on the right tongue lift provision. Secure excess chain with tape or Type III nylon cord.

8. Cluster and tie or tape (breakaway technique) all sling legs together on top of the trailer to prevent entanglement during hookup and lift-off.

Figure 5-14. M998/1038, 1-1/4 Ton Truck, Cargo (HMMWV) and M167 Gun (Vulcan) (continued)

5-16. M998/M1038 1 1/4-Ton Cargo Truck (HMMWV) and M102, 105-mm Howitzer

a. Applicability. The following items in Table 5-15 are certified for the helicopter(s) listed in the following table by the US Army Soldier Systems Center:

Table 5-15. M998/M1038 1 1/14-Ton Cargo Truck (HMMWV) and M102, 105-mm Howitzer

NOMENCLATURE	MAX WEIGHT (POUNDS)	SLING SET	LINK COUNT FRONT/ REAR	TYPE OF AIRCRAFT	RECOMMENDED AIRSPEED (KNOTS)
Truck, Cargo, 1 1/4-Ton, M998/M1038 without Accompanying Load	7,700	10K	36/8	CH-47	90
Truck, Cargo, 1 1/4-Ton, M998/M1038 with Accompanying Load	7,700	10K	40/8	CH-47	90
Howitzer, M102, without Accompanying Load	3,160	10K	83/9	CH-47	90
Howitzer, M102, with Accompanying Load	3,160	10K	58/6	CH-47	90
Accompanying Load	2,860	5K or 10K Net	N/A	CH-47	90

b. Materials. The following materials are required to rig this load:

(1) Sling set (10,000-pound capacity) (2 each).

(2) Tape, adhesive, pressure-sensitive, 2-inch wide roll.

(3) Cord, nylon, Type III, 550-pound breaking strength.

(4) Webbing, cotton, 1/4-inch, 80-pound breaking strength.

(5) Strap, cargo, tiedown, CGU-1/B (2 each).

(6) Felt sheet, cattle hair, Type IV, 1/2-inch or suitable substitute.

(7) Clevis assembly, Type V platform, NSN 1670-01-162-2372, (2 each, 5 each if using a 25,000-pound capacity sling set). Three medium clevis assemblies may be substituted for the three Type V platform clevises used on the howitzer when using 25,000-pound capacity sling sets.

(8) 5,000- or 10,000-pound capacity net (used for accompanying load).

(9) Clevis assembly, large, or apex fitting (10,000-pound capacity).

c. Personnel. Two persons can prepare and rig the M998/M1038 HMMWV in 15 minutes. Two persons can prepare and rig the howitzer in 10 minutes.

d. Procedures. Attach the howitzer to the truck by placing the lunette on the pintle hook and securing the latch with tape or Type III nylon cord. Secure the safety chains. Position the vehicle on level ground so both the truck and howitzer are in a straight line. The following procedures apply to this load:

(1) Preparation. Prepare the load using the following steps:

(a) Fold mirrors inward and tie together with Type III nylon cord. Remove the doors and secure to the seats with Type III nylon cord.

(b) Secure all equipment and cargo inside the truck with tiedown straps, tape, or Type III nylon cord.

(c) Ensure the fuel tank is not over 3/4 full. Inspect the fuel tank cap, oil filler cap, and battery caps for proper installation.

(d) Engage the vehicle parking brake and put the transmission in neutral.

(e) Ensure the front wheels are pointed straight ahead. Tie down the steering wheel, using the securing device attached under the dashboard.

(f) Secure the brake light cable to the howitzer trail with tape or Type III nylon cord.

(g) Secure the cover over the howitzer sights.

(h) Place the section equipment chest on the end of the trails and secure with tiedown straps.

(i) Engage the howitzer hand brake.

(j) Position a Type V platform clevis assembly in the tiedown provision located on the outboard side of the truck frame above the left rear wheel. Ensure the bolt end of the clevis is facing toward the howitzer. Route the free end of one tiedown strap under the howitzer left trail, up over the trail box cross member support, through the Type V platform clevis, and connect it to the hook on the ratchet.

(k) Repeat the above procedure on the right side of the load.

(l) Position padding between the strap and the angled bracket (gusset) located forward of the rear lift provision on the truck.

(m) Tighten both CGU-1/B tiedown straps at the same time. Secure the excess strap and safety the ratchet handles in the closed position with tape.

CAUTION
Do not attach the tiedown straps to the rear wheels. The wheels may rotate in flight and the straps may become loose.

(n) Prepare and rig the cargo net, if used, in accordance with FM 10-450-3. Position the cargo net close enough to the howitzer so the lifting legs and apex fitting can be routed under the howitzer trails. Connect the large clevis or 10,000-pound capacity apex fitting to the cargo net apex fitting.

(2) Rigging. Rig the load according to the steps in Figure 5-15.

(3) Hookup. Two hookup teams are required for this load. The static wand person discharges the static electricity with the static wand. The forward hookup person stands in the bed of the vehicle and places apex fitting 1 onto the forward cargo hook. The aft hookup person stands on the trails of the howitzer and places apex fitting 2 onto the aft cargo hook. The hookup team then carefully dismounts the load and remains close to the load as the helicopter removes slack from the sling legs. When successful hookup is assured, the hookup team quickly exits the area underneath the helicopter to the designated rendezvous point.

NOTE: Advise the aircraft commander to release the sling set apex fitting on the side of the howitzer away from the gun sights to prevent damage.

(4) Derigging. Derigging is the reverse of the preparation and rigging procedures in steps d (1) and d (2).

NOTE: If a 25,000-pound capacity sling set is used to rig the howitzer, attach a Type V platform clevis to each lift provision on the howitzer. Position the bell portion of the clevis on the lift provision pin.

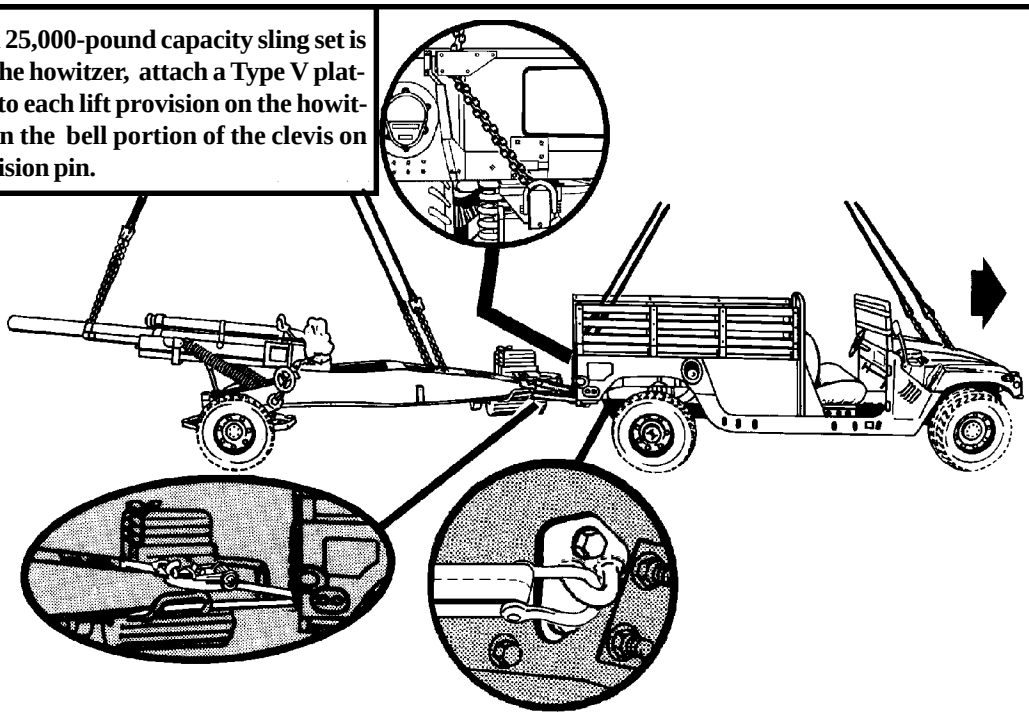

RIGGING STEPS

1. Position apex fitting on top of the truck bed. Route outer sling legs 1and 2 to the front of the vehicle and inner sling legs 3 and 4 to the rear. Sling legs 1 and 3 must be on the left side of the load.

2. Loop the chain end of sling leg 1 through the left front lift provision that protrudes through the hood of the vehicle. Place the correct link from Table 5-15 in the grab hook. Repeat with sling leg 2 and the right front lift provision. Secure excess chain with tape or Type III nylon cord.

3. Route the chain end of sling leg 3 through the eyelet opening in the upper left corner of the tailgate. Loop the chain end through the left lift provision on the bumper and thread back through the eyelet opening in the tailgate. Place the correct link from Table 5-15 in the grab hook. Repeat with sling leg 4 and the right rear lift provision.

4. Cluster and tie or tape (breakaway technique) all sling legs together on top of the vehicle to prevent entanglement during hookup and lift-off.

5. Position the apex fitting of sling set 2 on top of the breech. Route outer sling legs 1and 2 to the trails and inner sling legs 3 and 4 to the barrel. Sling legs 1 and 3 must be on the left side of the load.

6. Loop the chain end of sling leg 1 through the lift provision located on the left trail. If an accompanying load is carried, loop the chain end through the lift provision, through the large clevis or apex fitting connected to the accompanying load. Place the correct link from Table 5-15 in the grab hook. Repeat with sling leg 2 through the lift provision on the right trail. Secure excess chain with tape or Type III nylon cord.

7. Loop the chain end of sling legs 3 and 4 through the lift provision located on the howitzer barrel. Place the correct link from Table 5-15 in the grab hook. Secure excess chain with tape or Type III nylon cord.

8. Cluster and tie or tape (breakaway technique) all sling legs together on top of the trailer to prevent entanglement during hookup and lift-off.

Figure 5-15. M998/M1038 Cargo Truck (HMMWV) and M102, 105-mm Howitzer

5-17. M1037/M1097 Truck, Utility, 1 1/4-Ton (HMMWV) and M119, 105-mm Howitzer

a. Applicability. The following items in Table 5-16 are certified for the helicopter(s) listed in the following table by the US Army Soldier Systems Center:

Table 5-16. M1037/M1097 Truck, Utility, 1 1/4-Ton (HMMWV) and M119, 105-mm Howitzer

NOMENCLATURE	MAX WEIGHT (POUNDS)	SLING SET	LINK COUNT FRONT/ REAR	TYPE OF AIRCRAFT	RECOMMENDED AIRSPEED (KNOTS)
Truck, 1 1/4-Ton HMMWV, M1037/M1097	7,320	10K	80/3	CH-47	120
Howitzer, 105-mm, M119, (M1037 HMMWV as Prime Mover)	4,160	10K	leg 1 - 28 leg 2 - 30 leg 3 - 20	CH-47	120
Howitzer, 105-mm, M119, (M1097 HMMWV as Prime Mover)	4,160	10K	leg 1 - 55 leg 2 - 40 leg 3 - 30	CH-47	120

b. Materials. The following materials are required to rig this load:

(1) Sling set (10,000-pound capacity) (2 each).

(2) Tape, adhesive, pressure-sensitive, 2-inch wide roll.

(3) Cord, nylon, Type III, 550-pound breaking strength.

(4) Webbing, cotton, 1/4-inch, 80-pound breaking strength.

(5) Strap, cargo, tiedown, CGU-1/B (4 each).

(6) Felt sheet, cattle hair, Type IV, 1/2-inch or suitable substitute.

(7) Clevis assembly, Type V platform, NSN 1670-01-162-2372, (2 each).

(8) Webbing, nylon, tubular, 1/2-inch, 1,000-pound breaking strength.

c. Personnel. Two persons can prepare and rig the M1037/M1097 HMMWV in 15 minutes. Two persons can prepare and rig the howitzer in 10 minutes.

d. Procedures. Attach the howitzer to the truck by placing the lunette on the pintle hook and securing the latch with tape or Type III nylon cord. Secure the safety chains. Position the vehicle on level ground so both the truck and howitzer are in a straight line. The following procedures apply to this load:

(1) Preparation. Prepare the load using the following steps:

(a) Fold mirrors inward and tie together with Type III nylon cord. Remove the doors and secure to the seats with Type III nylon cord.

(b) Secure all equipment and cargo inside the truck with tiedown straps, tape, or Type III nylon cord.

(c) Ensure the fuel tank is not over 3/4 full. Inspect the fuel tank cap, oil filler cap, and battery caps for proper installation.

(d) Engage the vehicle parking brake and put the transmission in neutral.

(e) Ensure the front wheels are pointed straight ahead. Tie down the steering wheel, using the securing device attached under the dashboard.

(f) Place the howitzer in the folded-towed position. Ensure the knock-off hub is in the horizontal position. Engage the right wheel parking brake (wheel with knock-off hub) only.

(g) Ensure the lunette is in the extended position. Install the towing eye stop (C-clamp) on the lunette and secure in position with its retaining pin.

(h) Secure the brake light cable to the trails with tape or Type III nylon cord.

(i) Secure the sight cover to the dial sight with tape or Type III nylon.

(j) Secure the firing platform, hand spike, and jack to the trail assembly with Type III nylon cord.

(k) If the detachable field spade is attached to the permanent spades, ensure the two locking pins are installed and locked in place. Route and tie a length of Type III nylon cord through the key ring of the safety cable and around the other end of the locking pin.

(l) Position a Type V platform clevis assembly in the tiedown provision located on the outboard side of the truck frame above the left rear wheel. Ensure the bolt end of the clevis is facing toward the howitzer. Route the free end of one tiedown strap under the howitzer left trail, through the Type V platform clevis, and connect it to the hook on the ratchet.

(m) Route a second strap under and around the trail tube, aft (closer to the gun wheel hub), of the triangular brace on the M119 trails, through the Type V platform clevis, and connect it to the hook on the ratchet.

(n) Repeat the procedures in paragraphs (l) and (m) on the right side of the load.

(o) Position padding between the strap and the angled bracket (gusset) located forward of the rear lift provision on the truck.

(p) Tighten all CGU-1/B tiedown straps at the same time. Secure the excess strap and safety the ratchet handles in the closed position with tape.

CAUTION
Do not attach the tiedown straps to the rear wheels. The wheels may rotate in flight and the straps may become loose.

(2) Rigging. Rig the load according to the steps in Figure 5-16.

(3) Hookup. Two hookup teams are required for this load. The static wand person discharges the static electricity with the static wand. The forward hookup person stands in the bed of the vehicle and places apex fitting 1 onto the forward cargo hook. The aft hookup person stands on the firing platform of the howitzer and places apex fitting 2 onto the aft cargo hook. The hookup team then carefully dismounts the load and remains close to the load as the helicopter removes slack from the sling legs. When successful hookup is assured, the hookup team quickly exits the area underneath the helicopter to the designated rendezvous point.

NOTE: Advise the aircraft commander to release the sling set apex fitting on the side of the howitzer away ftom the gun sights to prevent damage.

(4) Derigging. Derigging is the reverse of the preparation and rigging procedures in steps d (1) and d (2).

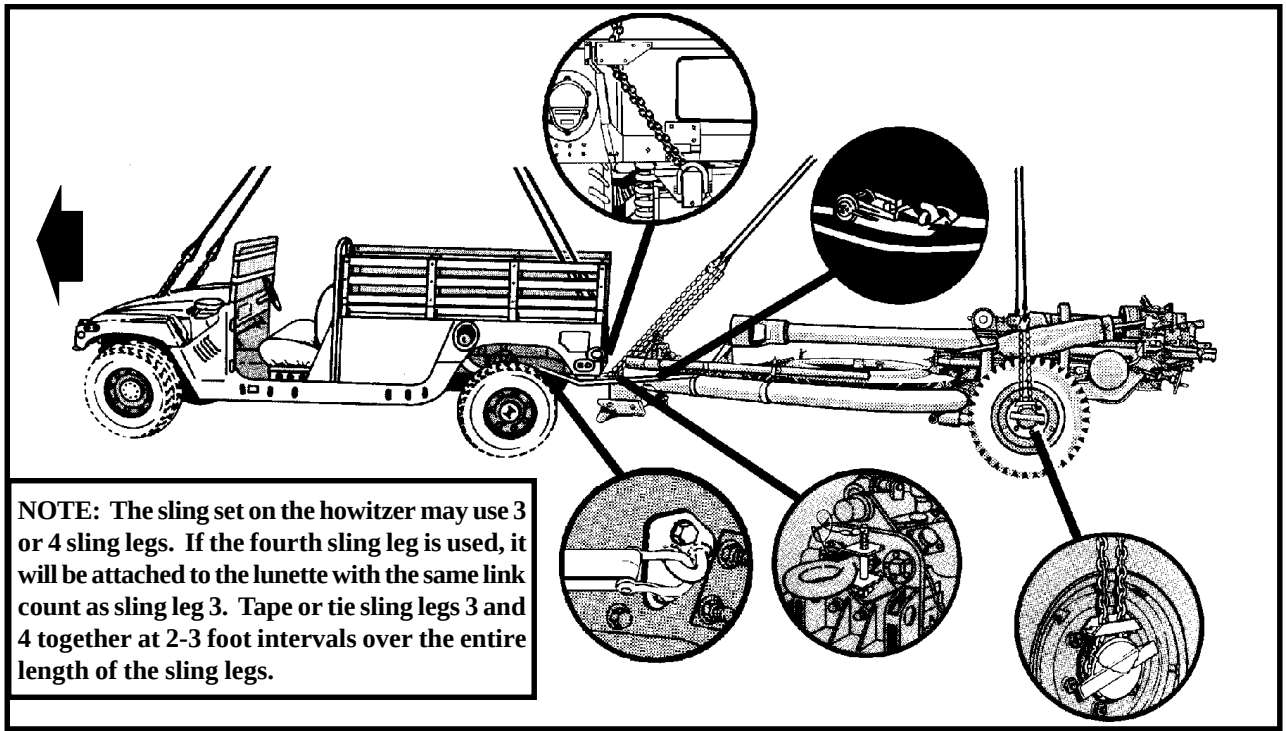

NOTE: The sling set on the howitzer may use 3 or 4 sling legs. If the fourth sling leg is used, it will be attached to the lunette with the same link count as sling leg 3. Tape or tie sling legs 3 and 4 together at 2-3 foot intervals over the entire length of the sling legs.

RIGGING STEPS

1. Position apex fitting on top of the truck bed. Route outer sling legs 1and 2 to the front of the vehicle and inner sling legs 3 and 4 to the rear. Sling legs 1 and 3 must be on the left side of the load.

2. Loop the chain end of sling leg 1 through the left front lift provision that protrudes through the hood of the vehicle. Place the correct link from Table 5-16 in the grab hook. Repeat with sling leg 2 and the right front lift provision. Secure excess chain with tape or Type III nylon cord.

3. Route the chain end of sling leg 3 through the eyelet opening in the upper left corner of the tailgate. Loop the chain end through the left lift provision on the bumper and thread back through the eyelet opening in the tailgate. Place the correct link from Table 5-16 in the grab hook. Repeat with sling leg 4 and the right rear lift provision.

4. Cluster and tie or tape (breakaway technique) all sling legs together on top of the vehicle to prevent entanglement during hookup and lift-off.

5. Position the apex fitting of sling set 2 on top of the barrel over the firing platform. Route outer sling legs 1and 2 to the wheel hubs and inner sling leg 3 to the lunette. Sling leg 1 must be on the left wheel hub.

6. Loop the chain end of sling leg 1 around the left wheel hub. Pull the sling leg taut to remove the slack from the chain. Install the sling set safety clamp on the chain links as close to the hub as possible. If the clamp is not available, tie the chain links together with 1/2- inch tubular nylon. Place the correct link from Table 5-16 in the grab hook. Repeat with sling leg 2 through the lift provision on the right trail. Secure excess chain with tape or Type III nylon cord.

7. Loop the chain end of sling leg 3 through the lunette. Place the correct link from Table 5-16 in the grab hook. Secure excess chain with tape or Type III nylon cord.

8. Cluster and tie or tape (breakaway technique) all sling legs together on top of the trailer to prevent entanglement during hookup and lift-off.

Figure 5-16. M1037/M1097 Truck, Utility, 1 1/4-Ton (HMMWV) and M119, 105-mm Howitzer

5-18. M1097 Truck, Utility, 1 1/4-Ton (HMMWV) with AN/MPQ-64 Tactical Quiet Generator (TQG) and High Mobility Trailer (HMT) with Sentinel Antenna Transceiver Group (ATG)

a. Applicability. The following items in Table 5-17 are certified for the helicopter(s) listed in the following table by the US Army Soldier Systems Center:

Table 5-17. M1097 HMMWV with AN/MPQ-64 TQG and HMT with Sentinel ATG

NOMENCLATURE	MAX WEIGHT (POUNDS)	SLING SET	LINK COUNT FRONT/ REAR	TYPE OF AIRCRAFT	RECOMMENDED AIRSPEED (KNOTS)
M1097 HMMWV with AN/MPQ-64 TQG	7,800	10K	27/3	CH-47	100
HMT with Sentinel ATG with Spreader Bar Modification	3,900	10K	6/30	CH-47	100

b. Materials. The following materials are required to rig this load:

(1) Sling set (10,000-pound capacity) (2 each).

(2) Tape, adhesive, pressure-sensitive, 2-inch wide roll.

(3) Cord, nylon, Type III, 550-pound breaking strength.

(4) Webbing, cotton, 1/4-inch, 80-pound breaking strength.

(5) Strap, cargo, tiedown, CGU-1/B (2 each).

(6) Plywood, 3/4-inch x 4-foot x 6-foot.

(7) Reach pendants (2 each).

(8) Spreader bar assembly (component of ATG/Trailer).

(9) Felt sheet, cattle hair, Type IV, 1/2-inch or suitable substitute.

c. Personnel. Two persons can prepare and rig the M1097 HMMWV in 10 minutes. Two persons can prepare and rig the generator set in 10 minutes.

d. Procedures. Attach the ATG trailer to the truck by placing the lunette on the pintle hook and securing the latch with tape or Type III nylon cord. Secure the safety chains, cables, and hoses. Position the vehicle on level ground so both the truck and ATG trailer are in a straight line. The following procedures apply to this load:

(1) Preparation. Prepare the load using the following steps:

(a) Fold mirrors inward and tie together with Type III nylon cord. Remove the doors and the rear window. Secure the doors and window to the seats with Type III nylon cord.

(b) Ensure all vents are closed and secured. Secure all loose equipment inside the vehicle with tape, Type III nylon cord, or tiedown straps.

(c) Ensure the fuel tanks are not over 3/4 full. Inspect the fuel tank cap, oil filler cap, and battery caps for proper installation.

(d) Engage the vehicle parking brake and put the transmission in neutral.

(e) Ensure the front wheels are pointed straight ahead. Tie down the steering wheel, using the securing device attached under the dashboard.

(f) Install the lift provisions on the outer ends of the rear bumper by removing the tiedown provisions located on the front bumper and installing on the outer ends of the rear bumper.

(g) Partially retract all landing legs and secure with Type III nylon cord.

(h) Secure all lids, doors, and caps with tape or Type III nylon cord.

(i) Ensure the parking brake is set.

(j) Route the hook portion of a CGU-1/B tiedown strap through the left rear inboard tiedown provision located near the pintle on the rear bumper of the truck. Loop the tiedown through the left front trailer lift provision located on the left front of the trailer. Attach the hook portion of the tiedown strap to the ratchet.

NOTE: Do not attach the tiedown strap to the rear wheels of the vehicle. The rear wheels may rotate during flight causing slack in the straps.

(k) Repeat the above procedure on the right side of the load.

(l) Tighten both CGU-1/B tiedown straps at the same time. Secure the excess strap and safety the ratchet handles in the closed position with tape.

(m) Pad the top Sensor Interface Unit (SIU) latch on the roadside to prevent sling leg interference.

(n) Cut and position pieces of plywood over the antenna boxes on top of the ATG. Secure the plywood by drilling holes and lacing Type III nylon cord through the holes to convenient places on the load. Ensure the plywood is securely tied to prevent it from flying off during flight.

(o) Attach a reach pendant on each sling set in accordance with FM 10-450-3.

(2) Rigging. Rig the load according to the steps in Figure 5-17.

(3) Hookup. Two hookup teams are required for this load. The forward hookup person stands on top of the HMMWV wheel well and places the reach pendant with apex fitting 1 onto the forward cargo hook. The aft hookup person stands on top of the trailer wheel well and places the reach pendant with apex fitting 2 onto the aft cargo hook. The hookup team then carefully dismounts the load and remains close to the load as the helicopter removes slack from the sling legs. If the CGU-1/B tiedown straps loosen up the load should be set down and the tiedown straps retightened. When successful hookup is assured, the hookup team quickly exits the area underneath the helicopter to the designated rendezvous point

NOTE: Advise the aircraft commander to release the sling set apex fitting on the side of the HMMWV and ATG to prevent damage.

(4) Derigging. Derigging is the reverse of the preparation and rigging procedures in steps d (1) and d (2).

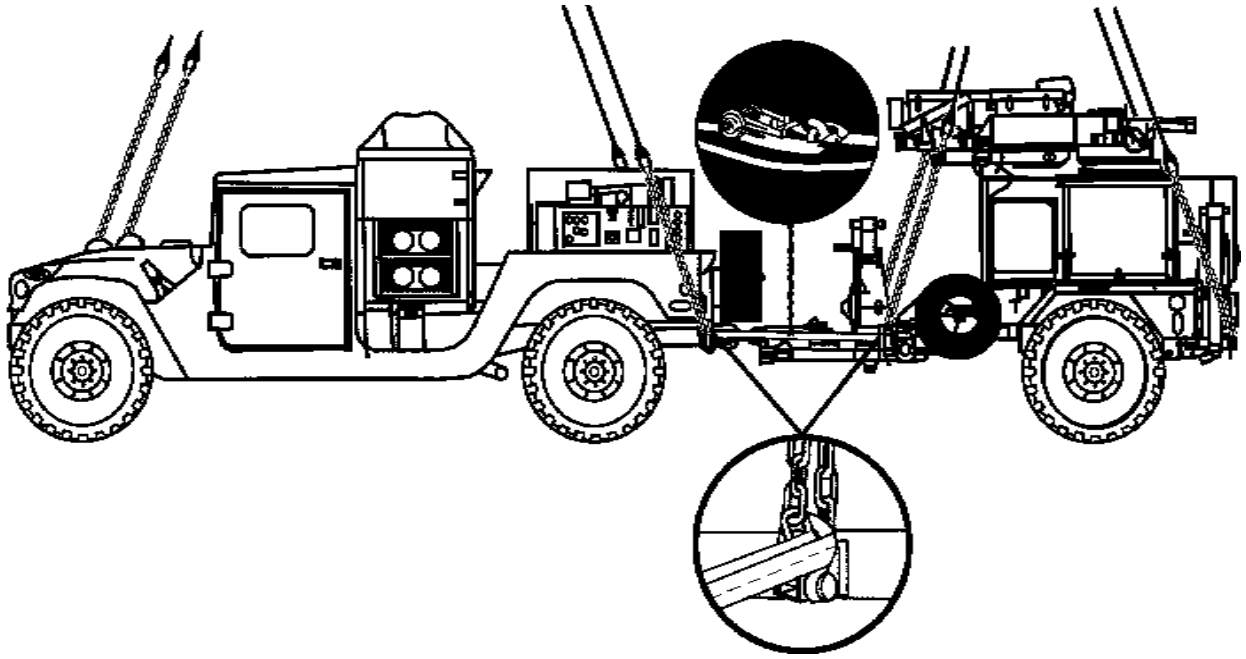

RIGGING STEPS

1. Position reach pendant and apex fitting 1 on top of the roof of the vehicle. Route outer sling legs 1 and 2 to the front of the vehicle and inner sling legs 3 and 4 to the rear. Sling legs 1 and 3 must be on the left side of the load.

2. Loop the chain end of sling leg 1 through the left front lift provision that protrudes through the hood. Place the correct link from Table 5-17 in the grab hook. Repeat with sling leg 2 and the right front lift provision. Secure excess chain with tape or Type III nylon cord.

3. Loop the chain end of sling legs 3 and 4 through their respective lift provisions located on the outer ends of the rear bumper. Place the correct link from Table 5-17 in the grab hook.

4. Cluster and tie or tape (breakaway technique) all sling legs together on top of the vehicle to prevent entanglement during hookup and lift-off.

5. Position the reach pendant and apex fitting of sling set 2 on top of the trailer. Route outer sling legs 1 and 2 to the front of the trailer and inner sling legs 3 and 4 to the rear of the trailer. Sling legs 1 and 3 must be on the left side of the load.

6. Route the chain end of sling leg 1 through the left side loop of the spreader bar, through the left front lift provision located on the front of the trailer, and back through the left loop of the spreader bar. Place the correct link from Table 5-17 in the grab hook. Repeat with sling leg 2 through the right spreader bar loop and right front lift provision. Tie or tape (breakaway technique) sling legs 1 and 2 together at 3-foot intervals on top of the trailer.

7. Loop the chain end of sling leg 3 through the left rear lift provision located on the rear of the trailer. Place the correct link from Table 5-17 in the grab hook. Repeat with sling leg 4 through the right rear lift provision. Secure excess chain with tape or Type III nylon cord. Tie or tape (breakaway technique) sling legs 3 and 4 together at 3-foot intervals on top of the trailer.

Figure 5-17. **M1097 HMMWV with AN/MPQ-64 TQG and HMT with Sentinel ATG**

5-19. M1097, 1-1/4 Ton (HMMWV) with Generator Pallet Group and PU 799 G-85/TPQ-36 Generator Group on M116A3 Trailer

a. Applicability. The following items in Table 5-18 are certified for the helicopter(s) listed in the following table by the US Army Soldier Systems Center:

Table 5-18. M1097, 1-1/4 Ton with Generator Pallet Group and G-85/TPQ-36 Generator Group

NOMENCLATURE	MAX WEIGHT (POUNDS)	SLING SET	LINK COUNT FRONT/ REAR	TYPE OF AIRCRAFT	RECOMMENDED AIRSPEED (KNOTS)
Truck, 1-1/4 Ton, HMMWV, M1097	7,400	10K	80/30	CH-47	120
G-85/TPQ-36 Generator Trailer Group	3,075	10K	52/36	CH-47	120

b. Materials. The following materials are required to rig this load:

(1) Sling set (10,000-pound capacity) (2 each).

(2) Tape, adhesive, pressure-sensitive, 2-inch wide roll.

(3) Cord, nylon, Type III, 550-pound breaking strength.

(4) Webbing, cotton, 1/4-inch, 80-pound breaking strength.

(5) Strap, cargo, tie-down, CGU-1/B (2 each, or more as required to secure cargo).

(6) Felt sheet, cattle hair, Type IV, 1/2-inch or suitable substitute.

c. Personnel. Two persons can prepare and rig the HMMWV in 15 minutes. Two persons can prepare and rig the generator set in 10 minutes.

d. Procedures. Attach the generator set to the truck by placing the lunette on the pintle hook and secure the latch. Secure the safety chains, cables, and hoses with tape or Type III nylon cord. Position the vehicle on level ground so both the truck and generator set are in a straight line. The following procedures apply to this load:

(1) Preparation. Prepare the load using the following steps:

(a) Fold mirrors forward in front of the windshield and tie together with Type III nylon cord. Remove the doors and secure to the seats with Type III nylon cord.

(b) Secure all equipment and cargo inside the truck with tiedown straps, tape, or Type III nylon cord.

(c) Ensure the fuel tanks are not over 3/4 full. Inspect the fuel tank cap, oil filler cap, and battery caps for proper installation.

(d) Engage the vehicle parking brake and put the transmission in neutral.

(e) Ensure the front wheels are pointed straight ahead. Tie down the steering wheel, using the securing device attached under the dashboard.

(f) Retract the lunette leg and secure with Type III nylon cord.

(g) Secure all lids, doors, and caps with tape or Type III nylon cord.

(h) Ensure the trailer parking brakes are set.

(i) Route the hook portion of a CGU-1/B tiedown strap through the left rear inboard tiedown provision located near the pintle on the rear bumper of the truck and

through the mounting bracket on the front of the trailer A-frame. Connect the hook to the ratchet of the CGU-1/B.

(j) Repeat the above procedure on the right side of the load.

(k) Tighten both CGU-1/B tiedown straps at the same time. Secure the excess strap and safety the ratchet handles in the closed position with tape.

(2) Rigging. Rig the load according to the steps in Figure 5-18.

(3) Hookup. Two hookup teams are required for this load. The static wand person discharges the static electricity with the static wand. The forward hookup person stands in the bed of the truck and places apex fitting 1 onto the forward cargo hook. The aft hookup person stands on the generator fender and places apex fitting 2 onto the aft cargo hook. The hookup team then carefully dismounts the trailer and remains close to the load as the helicopter removes slack from the sling legs. When successful hookup is assured, the hookup team quickly exits the area underneath the helicopter to the designated rendezvous point.

(4) Derigging. Derigging is the reverse of the preparation and rigging procedures in steps d (1) and d (2).

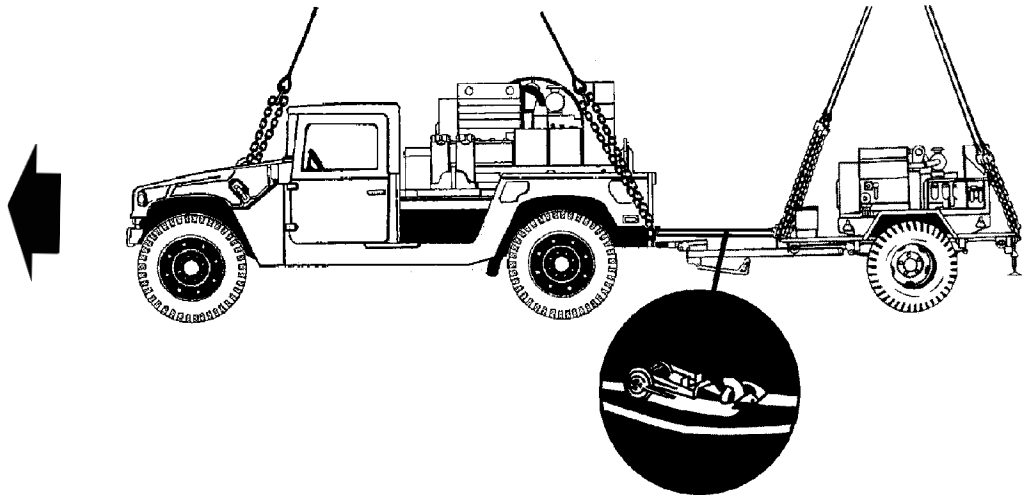

Figure 5-18. M1097, 1-1/4 Ton with Generator Pallet Group and G-85/TPQ-36 Generator Group

RIGGING STEPS

1. Position the apex fitting of sling set 1 in the bed of the vehicle. Route outer sling legs 1 and 2 to the front of the vehicle and inner sling legs 3 and 4 to the rear. Sling legs 1 and 3 must be on the left side of the load.

2. Loop the chain end of sling leg 1 through the left front lift provision that protrudes through the hood. Place the correct link from Table 5-18 in the grab hook. Repeat with sling leg 2 and the right front lift provision. Secure excess chain with tape or Type III nylon cord.

3. Route the chain end of sling leg 3 through the sling guide in the upper left corner of the tailgate. Loop the chain end through the left lift provision on the bumper and thread back through the sling guide in the tailgate. Place the correct link from Table 5-18 in the grab hook. Repeat with sling leg 4 and the right rear lift provision.

4. Cluster and tie or tape (breakaway technique) all sling legs together on top of the vehicle to prevent entanglement during hookup and lift-off.

5. Position apex fitting of sling set 2 on the trailer but not on top of the generator. Route outer sling legs 1 and 2 to the front of the trailer and inner sling legs 3 and 4 to the rear. Sling legs 1 and 3 must be on the left side of the load.

6. Loop the chain end of sling leg 1 through the left front lift provision located near the A-frame on the front of the trailer. Place the correct link from Table 5-18 in the grab hook. Repeat with sling leg 2 through the right front lift provision. Secure excess chain with tape or Type III nylon cord.

7. Route the chain end of sling leg 3 through the left rear lift provision. Place the correct link from Table 5-18 in the grab hook. Repeat with sling leg 4 through the right rear lift provision. Secure excess chain with tape or Type III nylon cord.

8. Pad the chains where they contact the load.

9. Cluster and tie or tape (breakaway technique) all sling legs together on top of the trailer to prevent entanglement during hookup and lift-off.

Figure 5-18. M1097, 1-1/4 Ton with Generator Pallet Group and G-85/TPQ-36 Generator Group (continued)

5-20. M1113 Shelter Carrier (HMMWV) with Digital Topographic Support System-Light (DTSS-L), AN/TYQ-67 (V)1 in LMS Shelter and PU-798 Generator on M116A3 Trailer

a. Applicability. The following items in Table 5-19 are certified for the helicopter(s) listed in the following table by the US Army Soldier Systems Center:

Table 5-19. M1113 Shelter Carrier (HMMWV) with Digital Topographic Support System-Light (DTSS-L), AN/TYQ-67 (V)1 in LMS Shelter and PU-798 Generator on M116A3 Trailer

NOMENCLATURE	MAX WEIGHT (POUNDS)	SLING SET	LINK COUNT FRONT/ REAR	TYPE OF AIRCRAFT	RECOMMENDED AIRSPEED (KNOTS)
M1113 Shelter Carrier, HMMWV, with Digital Topographic Support System-Light, AN/TYQ-67 (V)1	10,100	25K	35/5	CH-47	70
PU-798 Generator on M116A3 Trailer	2,457	25K	55/40	CH-47	70

b. Materials. The following materials are required to rig this load:

(1) Sling set (25,000-pound capacity) (2 each).

(a) Chain length, part number 38850-00053-102, from a 25,000-pound capacity sling set (8 each).

(b) Coupling link, part number 664241, from a 25,000-pound sling set (8 each).

(2) Tape, adhesive, pressure-sensitive, 2-inch wide roll.

(3) Cord, nylon, Type III, 550-pound breaking strength.

(4) Webbing, cotton, 1/4-inch, 80-pound breaking strength.

(5) Strap, cargo, tiedown, CGU-1/B (2 each).

(6) Felt sheet, cattle hair, Type IV, 1/2-inch or suitable substitute.

c. Personnel. Two persons can prepare and rig the DTSS-L in 15 minutes. Two persons can prepare and rig the generator set in 15 minutes.

d. Procedures. Attach the generator set to the truck by placing the lunette on the pintle hook and securing the latch with tape or Type III nylon cord. Secure the safety chains, cables, and hoses. Position the vehicle on level ground so both the truck and generator set are in a straight line. Tie the front lift provisions on the trailer in the up position with Type I 1/4-inch cotton webbing. The following procedures apply to this load:

(1) Preparation. Prepare the load using the following steps:

(a) Fold mirrors inward and tie together with Type III nylon cord. Remove the doors and secure to the seats with Type III nylon cord. Tape the windshield with in an X formation from corner to corner.

(b) Secure all loose equipment inside the shelter with tape, Type III nylon cord, or tie-down straps. Close and secure the door.

(c) Secure all equipment and cargo inside the truck with tiedown straps, tape, or Type III nylon cord.

(d) Ensure the fuel tanks are not over 3/4 full. Inspect the fuel tank cap, oil filler cap, and battery caps for proper installation.

(e) Engage the vehicle parking brake and put the transmission in neutral.

(f) Ensure the front wheels are pointed straight ahead. Tie down the steering wheel, using the securing device attached under the dashboard.

(g) Install the lift provisions on the outer ends of the rear bumper by removing the tiedown provisions located on the front bumper and installing them on the outer ends of the rear bumper.

(h) Partially retract all landing legs and secure in position with Type III nylon cord.

(i) Retract the lunette leg and secure with Type III nylon cord.

(j) Secure all lids, doors, and caps with tape or Type III nylon cord.

(k) Ensure the trailer parking brake is set.

(l) Route the hook portion of a CGU-1/B tiedown strap through the left rear inboard tiedown provision located near the pintle on the rear bumper of the truck and through the left front lift provision of the trailer. Connect the hook to the ratchet of the CGU-1/B.

(m) Repeat the above procedure on the right side of the load.

(n) Tighten both CGU-1/B tie-down straps at the same time. Secure the excess strap and safety the ratchet handles in the closed position with tape.

CAUTION
Do Not connect the CGU-1/B tiedown strap around the truck's rear axle or wheel.

(o) Connect one additional chain length to each chain on each sling set with a coupling link.

(2) Rigging. Rig the load according to the steps in Figure 5-19.

(3) Hookup. Two hookup teams are required for this load. The static wand person discharges the static electricity with the static wand. The forward hookup person kneels on top of the shelter and places apex fitting 1 onto the forward cargo hook. The aft hookup person stands on the generator fender and places apex fitting 2 onto the aft cargo hook. The hookup team then carefully dismounts the vehicle and the trailer and remains close to the load as the helicopter removes slack from the sling legs. When successful hookup is assured, the hookup team quickly exits the area underneath the helicopter to the designated rendezvous point.

(4) Derigging. Derigging is the reverse of the preparation and rigging procedures in steps d (1) and d (2).

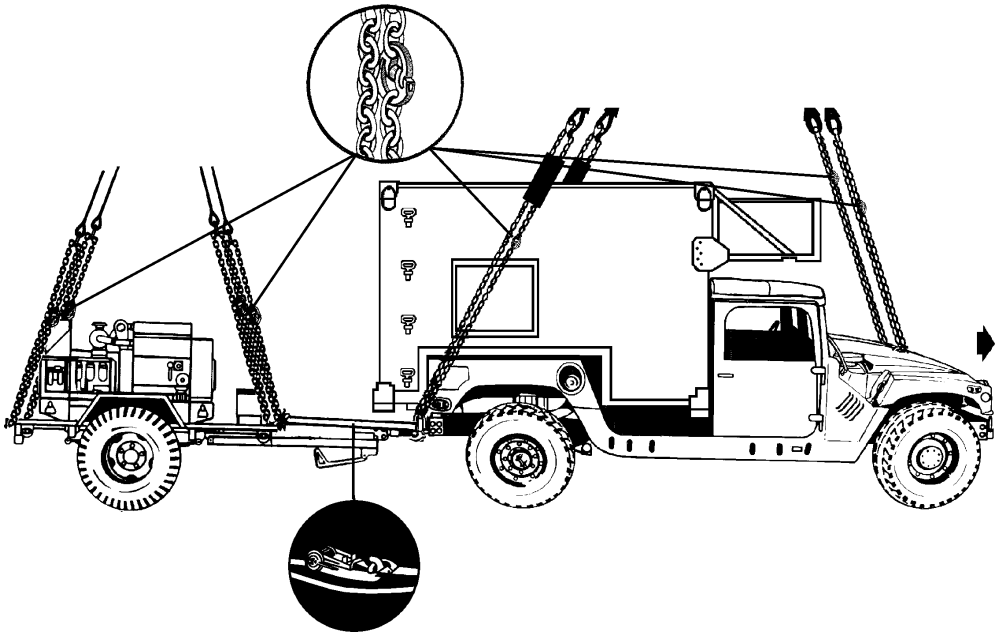

RIGGING STEPS

1. Position apex fitting on top of the shelter. Route outer sling legs 1and 2 to the front of the vehicle and inner sling legs 3 and 4 to the rear. Sling legs 1 and 3 must be on the left side of the load.

2. Loop the chain end of sling leg 1 through the left front lift provision that protrudes through the hood from inboard to outboard. Place the correct link from Table 5-19 in the grab hook. Repeat with sling leg 2 and the right front lift provision. Secure excess chain with tape or Type III nylon cord.

3. Loop the chain end of the sling legs through their respective lift provisions located on the outer ends of the rear bumper. Place the correct link from Table 5-19 in the grab hook. Secure excess chain with tape or Type III nylon cord.

4. Pad the chain where it contacts the shelter sides.

5. Cluster and tie or tape (breakaway technique) all sling legs together on top of the vehicle to prevent entanglement during hookup and lift-off.

6. Position the apex fitting of sling set 2 on top of the generator set. Route outer sling legs 1and 2 to the front of the generator and inner sling legs 3 and 4 to the rear of the generator. Sling legs 1 and 3 must be on the left side of the load.

7. Loop the chain end of sling leg 1 through the left front lift provision located on the front of the trailer. Place the correct link from Table 5-19 in the grab hook. Repeat with sling leg 2 through the right front lift provision. Secure excess chain with tape or Type III nylon cord.

8. Loop the chain end of sling leg 3 through the left rear lift provision. Place the correct link from Table 5-19 in the grab hook. Repeat with sling leg 4 through the right rear lift provision. Secure excess chain with tape or Type III nylon cord.

9. Cluster and tie or tape (breakaway technique) all sling legs together on top of the trailer to prevent entanglement during hookup and lift-off.

Figure 5-19. M1113 Shelter Carrier (HMMWV) with Digital Topographic Support System-Light (DTSS-L), AN/TYQ-67 (V)1 in LMS Shelter and PU-798 Generator on M116A3 Trailer

CHAPTER 6

CERTIFIED DUAL-POINT RIGGING PROCEDURES FOR HOWITZERS AND WEAPONS SYSTEMS

6-1. INTRODUCTION

This chapter contains rigging procedures for dual-point howitzer and weapon system loads that have been certified for sling load. Each rigging procedure is found in a paragraph that includes a description of the load, materials required for rigging, and steps to complete the procedure. An applicability paragraph is also a part of each paragraph and identifies the certified loads. The certified dual-point rigging procedures for howitzer and weapon system loads are in this section. Paragraphs 6-2 through 6-7 give detailed instructions for rigging loads.

NOTE: Reach Pendants may be used on dual point loads. Place a Reach Pendant on each apex fitting. A static discharge person is not required when using a Reach Pendant.

6-2. M101A1 Howitzer, 105-mm, with or without A-22 Cargo Bags

a. Applicability. The following items in Table 6-1 are certified for the helicopter(s) listed in the following table by the US Army Soldier Systems Center:

Table 6-1. M101A1 Howitzer, 105-mm, with or without A-22 Cargo Bags

NOMENCLATURE	MAX WEIGHT (POUNDS)	SLING SET	LINK COUNT FRONT/ REAR	TYPE OF AIRCRAFT	RECOMMENDED AIRSPEED (KNOTS)
M101A1 Howitzer	4,980	10K	30/30	CH-47	120
M101A1 Howitzer with 1 A-22 Cargo Bag	7,180	25K	12/12	CH-47	120
M101A1 Howitzer with 2 A-22 Cargo Bags	9,380	25K	12/12	CH-47	120
M101A1 Howitzer with 3 A-22 Cargo Bags	11,580	25K	12/12	CH-47	120

b. Materials. The following materials are required to rig this load:

(1) Sling set (10,000- or 25,000-pound capacity) with one additional apex fitting for the sling set being used.

NOTE: Because of the additional weight of the A-22 cargo bags use the 25,000-pound capacity sling set when sling loading howitzers with accompanying loads.

(2) Tape, adhesive, pressure-sensitive, 2-inch wide roll.

(3) Cord, nylon, Type III, 550-pound breaking strength.

(4) Webbing, cotton, 1/4-inch, 80-pound breaking strength.

(5) Felt sheet, cattle hair, Type IV, 1/2-inch or suitable substitute.

(6) Additional sling leg assemblies (2,500-pound capacity) from 10,000-pound capacity sling sets (one per A-22 cargo bag).

(7) Additional apex fitting (one per accompanying load).

(8) Bag, cargo, A-22 (as required).

c. Personnel. Two persons can prepare and rig this load in 10 minutes.

d. Procedures. The following procedures apply to this load:

(1) Preparation. Prepare the load using the following steps:

(a) Close and lock the breech.

(b) Ensure the trails are closed and secured. Rotate the lunette downward. Safety the trail closing lock handle with tape or Type III nylon cord.

(c) Ensure the muzzle cover, breech and tube covers, and all stowed equipment are secured with tape or Type III nylon cord.

(d) Pad the gun tube above the cradle around the forward edges of the sleigh assembly with felt padding. Secure the padding with tape or Type III nylon cord.

(e) Pad each trail aft of the traveling lock shaft with felt padding. Secure the padding with tape or Type III nylon cord.

(f) Set the hand brakes.

(g) If required, inspect and prepare the A-22 cargo bag in accordance with FM 10-450-3 as close as possible to the gun trails.

(2) Rigging. Rig the load according to the steps in Figure 6-1.

(3) Hookup. Two hookup teams are required for this load. The static wand person stands on the trail of the howitzer and discharges the static electricity with the static wand. The forward hookup person stradles the gun tube and places apex fitting 1 onto the forward cargo hook. The aft hookup person stands on the trails and places apex fitting 2 onto the aft cargo hook. The hookup teams then carefully dismount the howitzer and remain close to the load as the helicopter removes slack from the sling legs. When successful hookup is assured, the hookup teams quickly exit the area underneath the helicopter to the designated rendezvous point.

(4) Derigging. Derigging is the reverse of the preparation and rigging procedures in steps d (1) and d (2).

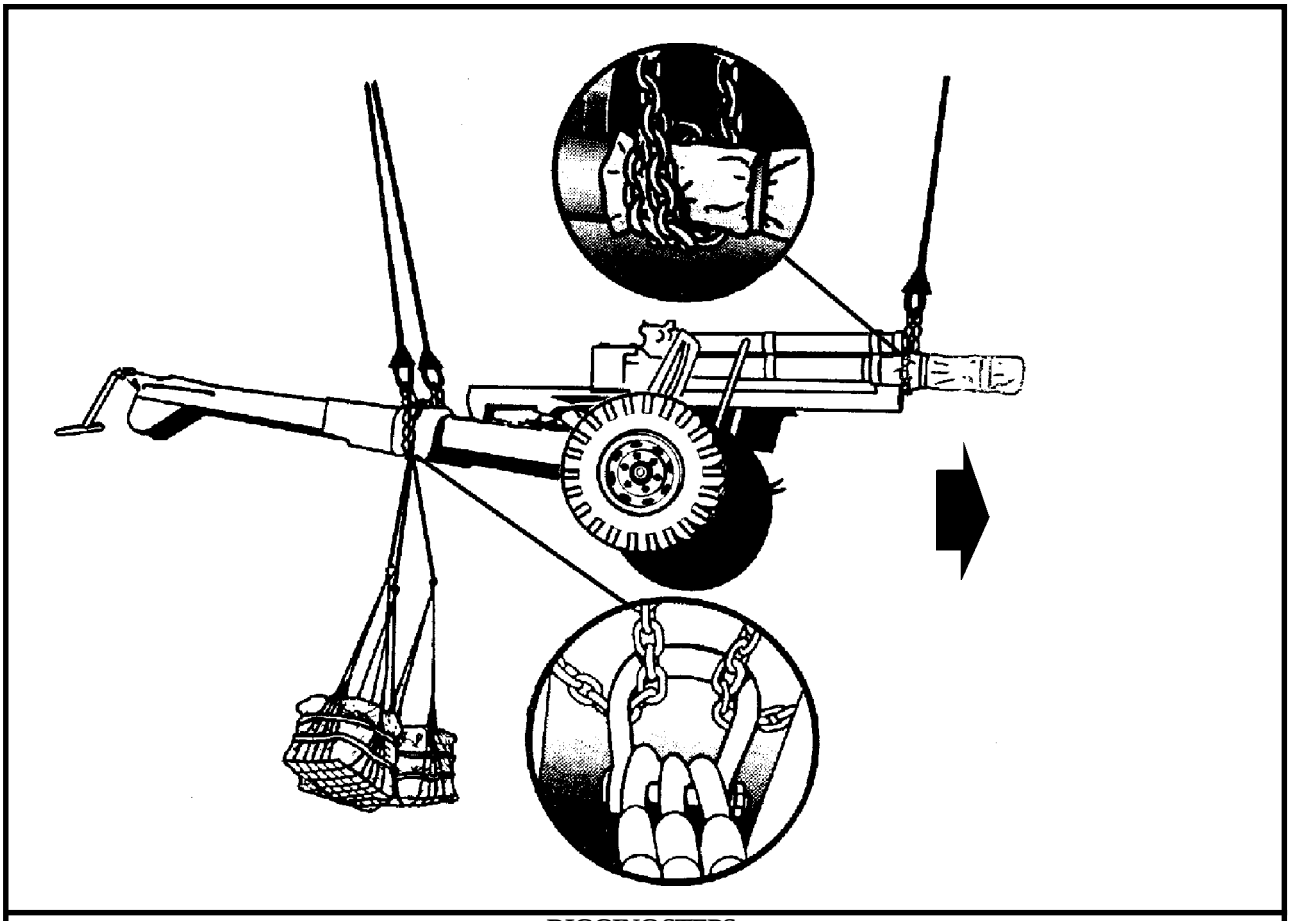

RIGGING STEPS

1. Connect two sling legs to apex fitting number 1. Position the sling set on top of the breech. Both sling legs go around the barrel.

2. Loop the chain end of sling leg 1 around the padded muzzle (one complete wrap). Place the correct link from Table 6-1 in the grab hook. Loop sling leg 2 around the padded muzzle in the opposite direction from sling leg 1 (one complete wrap). Secure excess chain with tape or Type III nylon cord.

3. Connect two sling legs to apex fitting number 2. Position the sling set on top of the gun trails.

4. Wrap the left chain end around the left padded trail two complete wraps. Place the correct link from Table 6-1 in the grab hook. Repeat with the right sling leg and the right padded gun trail. Secure excess chain with tape or Type III nylon cord.

5. Cluster and tie or tape (breakaway technique) the sling legs in each sling set together to prevent entanglement during hookup and lift-off.

6. If required, attach the accompanying A-22 (s) by placing an additional apex fitting around the inner chains of the rear sling legs, so the fitting is between the trails. Route the chain end of an additional sling leg through the clevis on the A-22 cargo bag and insert link 3 in the grab hook. Place the eye of the sling leg in the additional apex fitting between the trails. Repeat this procedure for each A-22 cargo bag being lifted.

Figure 6-1. M101A1 Howitzer, 105-mm, with or without A-22 Cargo Bags

6-3. Two M101A1 Howitzwers, Side by Side (USMC)

a. Applicability. The following items in Table 6-2 are certified for the helicopter(s) listed in the following table by the US Army Soldier Systems Center:

Table 6-2. Two M101A1 Howitzwers, Side by Side

NOMENCLATURE	MAX WEIGHT (POUNDS)	SLING SET	LINK COUNT FRONT/ REAR	TYPE OF AIRCRAFT	RECOMMENDED AIRSPEED (KNOTS)
Two M101A1 Howitzers, 105-mm, (side by side)	9,012	40K	Listed in Rigging Instructions	CH-53	120

b. Materials. The following materials are required to rig this load:

(1) Sling set (40,000-pound capacity) with one additional apex fitting.

(a) Chain length, part number 607050, from a 40,000-pound capacity sling set (2 each).

(b) Coupling link, part number 577-0815, from a 40,000-pound sling set (2 each).

(2) Tape, adhesive, pressure-sensitive, 2-inch wide roll.

(3) Cord, nylon, Type III, 550-pound breaking strength.

(4) Webbing, cotton, 1/4-inch, 80-pound breaking strength.

(5) Strap, cargo, tiedown, CGU-1/B (as required).

(6) Felt sheet, cattle hair, Type IV, 1/2-inch or suitable substitute.

(7) Pad, energy, dissipating, honeycomb, 24 inch x 24 inch (2 each) or 4 inch x 4 inch x 24 inch wood (2 each).

c. Personnel. Two persons can prepare and rig this load in 15 minutes.

d. Procedures. The following procedures apply to this load:

(1) Preparation. Prepare the load using the following steps:

(a) Position the two howitzers side by side with the barrels facing in opposite directions.

(b) Place the honeycomb or wood between the inboard wheel of one howitzer and the inboard trail of the other howitzer. Secure the honeycomb or wood in place with a tiedown strap. Repeat with the other tiedown strap on the inboard wheel of the other howitzer and the inboard trail.

(c) Close and lock the breech of each howitzer.

(d) Ensure the trails are properly closed and secured. Rotate the lunette downward. Secure the trail closing lock handles with tape or Type III nylon cord.

(e) Remove or secure the muzzle, breech, and barrel covers.

(f) Remove or pad the sight mounts.

(g) Secure loose equipment with tape or Type III nylon cord. Place the section equipment chest on the trails and secure with tiedown straps.

(h) Set the hand brake.

(i) Wrap padding around the gun tubes above the cradle and the forward edge of the recoil damper assembly. Secure the padding with tape or Type III nylon cord.

(j) Wrap padding around the left and right trails of both howitzers just aft of the travel lock shaft area and secure with tape or Type III nylon cord.

(2) Rigging. Rig the load according to the steps in Figure 6-2.

(3) Hookup. Two hookup teams are required for this load. The static wand person discharges the static electricity with the static wand. The forward hookup person stands on the trail end of howitzer 2 and places apex fitting 1 onto the forward cargo hook. The aft hookup person stands on the trail end of howitzer 1 and places apex fitting 2 onto the aft cargo hook. The hookup teams then carefully dismount the howitzers and remain close to the load as the helicopter removes slack from the sling legs. When successful hookup is assured, the hookup teams quickly exit the area underneath the helicopter to the designated rendezvous point.

(4) Derigging. Derigging is the reverse of the preparation and rigging procedures in steps d (1) and d (2).

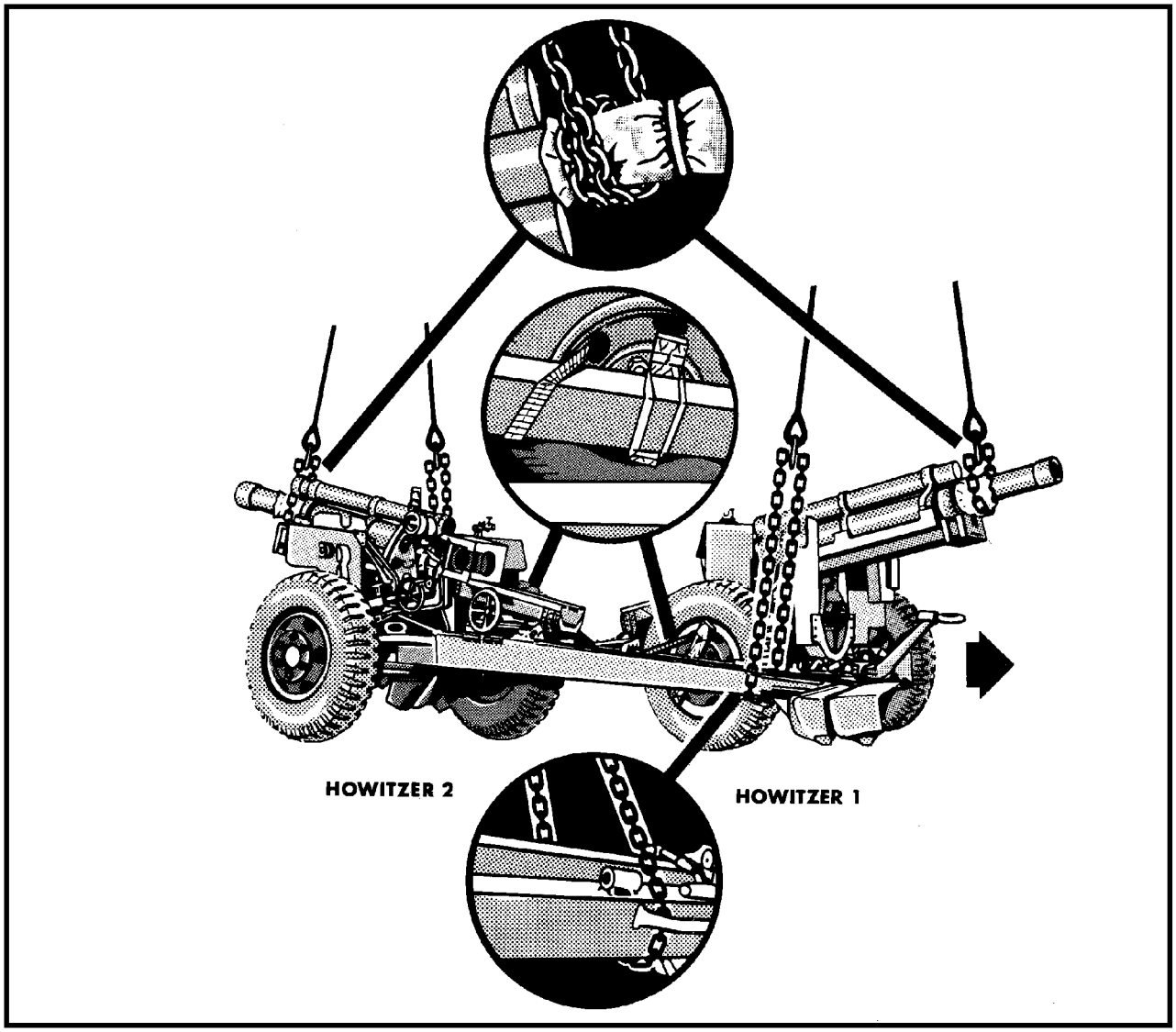

Figure 6-2. Two M101A1 Howitzers, Side by Side

RIGGING STEPS

NOTE: The howitzer with the barrel facing in the direction of flight is designated as howitzer 1.

1. Place two sling legs on apex fitting number 1. Attach a chain length to one sling leg using the coupling link. Position apex fitting number 1 on top of the barrel of howitzer number 1.

2. Wrap the chain end of the sling leg that does not have the additional chain length once around the padding on the barrel of howitzer 1 and insert link 30 in the grab hook. Secure excess chain with tape or Type III nylon cord.

3. Wrap the chain end of the other sling leg around the padding on the trail end of howitzer 2 and insert link 55 in the grab hook. Secure excess chain with tape or Type III nylon cord.

4. Place two sling legs on apex fitting number 2. Attach a chain length to one sling leg using the coupling link. Position apex fitting number 2 on top of the barrel of howitzer number 2.

5. Wrap the chain end of the sling leg that does not have the additional chain length once around the padding on the barrel of howitzer 2 and insert link 30 in the grab hook. Secure excess chain with tape or Type III nylon cord.

6. Wrap the chain end of the other sling leg around the padding on the trail end of howitzer 1 and insert link 56 in the grab hook. Secure excess chain with tape or Type III nylon cord.

7. Cluster and tie or tape (breakaway technique) the sling legs in each sling set together to prevent entanglement during hookup and lift-off.

Figure 6-2. Two M101A1 Howitzers, Side by Side (continued)

6-4. M102 Howitzer, 105-mm

a. Applicability. The following item in Table 6-3 is certified for the helicopter(s) listed in the following table by the US Army Soldier Systems Center:

Table 6-3. M102 Howitzer, 105-mm

NOMENCLATURE	MAX WEIGHT (POUNDS)	SLING SET	LINK COUNT FRONT/ REAR	TYPE OF AIRCRAFT	RECOMMENDED AIRSPEED (KNOTS)
Howitzer, 105-mm, M102	3,330	10K	70/3	CH-47	130

b. Materials. The following materials are required to rig this load:

(1) Sling set (10,000-pound capacity) with one additional apex fitting .

(2) Tape, adhesive, pressure-sensitive, 2-inch wide roll.

(3) Cord, nylon, Type III, 550-pound breaking strength.

(4) Webbing, cotton, 1/4-inch, 80-pound breaking strength.

(5) Strap, cargo, tiedown, CGU-1/B (as required).

c. Personnel. Two persons can prepare and rig this load in 10 minutes.

d. Procedures. The following procedures apply to this load:

(1) Preparation. Prepare the load using the following steps:

(a) Place muzzle and sight covers on howitzer and secure with tape or Type III nylon cord.

(b) Place the section equipment chest on the end of the trails and secure with tiedown straps.

(c) Set the handbrake.

(2) Rigging. Rig the load according to the steps in Figure 6-3.

(3) Hookup. Two hookup teams are required for this load. The static wand person stands on the trail of the howitzer and discharges the static electricity with the static wand. The forward hookup person stands on the wheel and places apex fitting 1 onto the forward cargo hook. The aft hookup person stands on the trails and places apex fitting 2 onto the aft cargo hook. The hookup teams then carefully dismount the howitzer and remain close to the load as the helicopter removes slack from the sling legs. When successful hookup is assured, the hookup teams quickly exit the area underneath the helicopter to the designated rendezvous point.

(4) Derigging. Derigging is the reverse of the preparation and rigging procedures in steps d (1) and d (2).

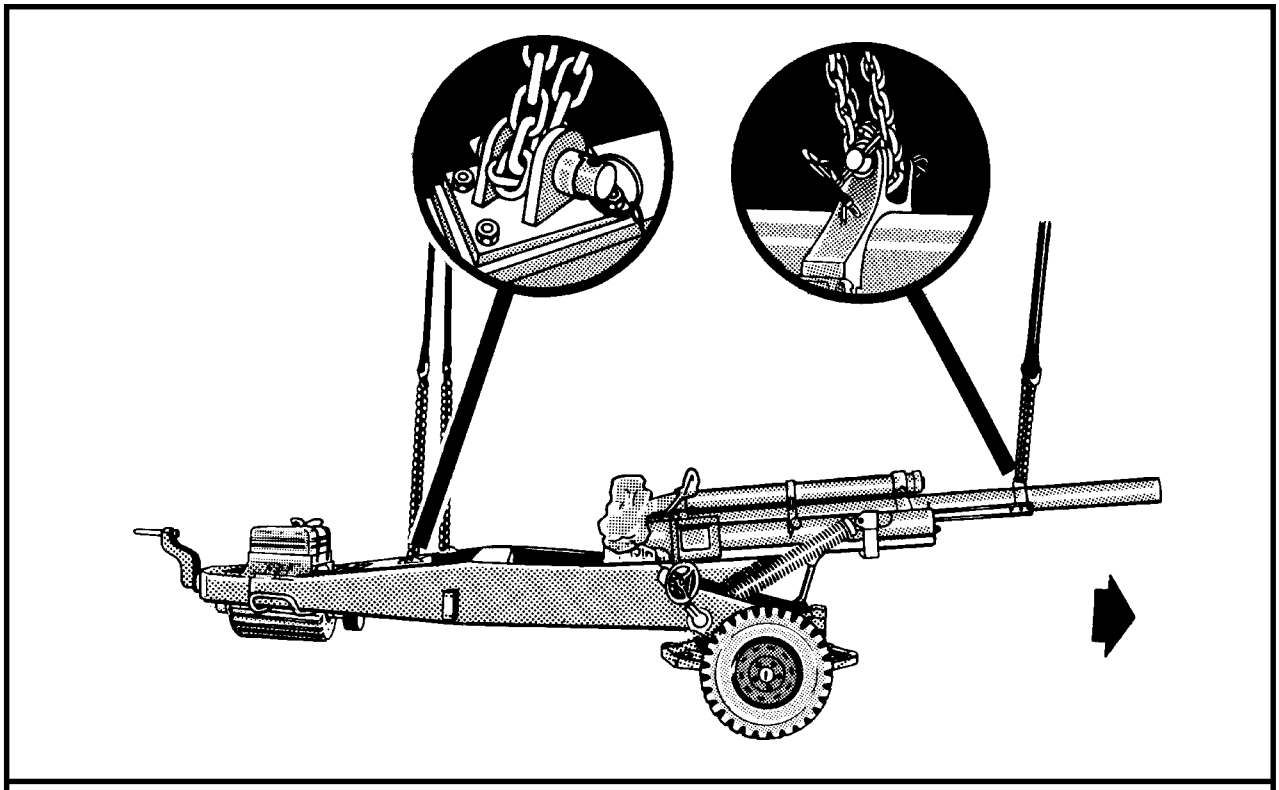

RIGGING STEPS

1. Place two sling legs on apex fitting number 1. Position apex fitting number 1 on top of the howitzer tube.

2. Loop the chain ends of both sling legs through the lifting bracket on the howitzer tube. Place the correct link from Table 6-3 in the grab hook. Secure the excess chain with tape or Type III nylon cord.

3. Place two sling legs on apex fitting number 2. Position apex fitting number 2 between the trails of the howitzer.

4. Loop the chain ends of the left and right sling legs through their respective lift provisions located on the trails. Place the correct link from Table 6-3 in the grab hook.

5. Cluster and tie or tape (breakaway technique) the sling legs in each sling set together to prevent entanglement during hookup and lift-off.

Figure 6-3. M102 Howitzer

6-5. Two M102 Howitzers, 105-mm, with or without One, Two, or Three A-22 Cargo Bags

a. Applicability. The following items in Table 6-4 are certified for the helicopter(s) listed in the following table by the US Army Soldier Systems Center:

Table 6-4. Two M102 Howitzers, 105-mm, with or without One, Two, or Three A-22 Cargo Bags

NOMENCLATURE	MAX WEIGHT (POUNDS)	SLING SET	LINK COUNT FRONT/ REAR	TYPE OF AIRCRAFT	RECOMMENDED AIRSPEED (KNOTS)
Two M102 Howitzers, 105-mm	6,600	10K	Listed in Rigging Instructions	CH-47	120
Two M102 Howitzers, 105-mm with one A-22 Cargo Bag	8,800	10K	Listed in Rigging Instructions	CH-47	120
Two M102 Howitzers, 105-mm with two A-22 Cargo Bags	11,000	25K	Listed in Rigging Instructions	CH-47	120
Two M102 Howitzers, 105-mm with three A-22 Cargo Bags	13,200	25K	Listed in Rigging Instructions	CH-47	120

b. Materials. The following materials are required to rig this load:

(1) Sling set (10,000-pound capacity) (used for rigging two howitzers or two howitzers and one A-22 cargo bag).

(a) One additional apex fitting (10,000-pound capacity) (2 additional apex fittings if rigging an accompanying load).

(b) One additional sling leg assembly (2,500-pound capacity) (2 additional sling leg assemblies if rigging an accompanying load).

OR

(2) Sling set (25,000-pound capacity) (used for rigging two howitzers with two or three A-22 cargo bags).

(a) One additional apex fitting (25,000-pound capacity).

(b) One additional apex fitting (10,000- or 25,000-pound capacity) (used for accompanying load).

(c) Two additional sling leg assemblies (6,250-pound capacity) when rigging two howitzers and two A-22 cargo bags (3 additional sling leg assemblies if rigging three A-22 cargo bags) (6,250-pound capacity).

(3) Clevis assembly, medium, used with 25,000-pound capacity sling set (4 each) .

(4) Tape, adhesive, pressure-sensitive, 2-inch wide roll.

(5) Cord, nylon, Type III, 550-pound breaking strength.

(6) Webbing, cotton, 1/4-inch, 80-pound breaking strength.

(7) Felt sheet, cattle hair, Type IV, 1/2-inch, 24 inches x 60 inches (2 each) or suitable substitute.

(8) Strap, cargo, tiedown, CGU-1/B (as required).

(9) Pad, energy, dissipating, honeycomb, 36 inch x 36 inch (1 each) or wood block or felt sheets (4 each).

(10) Bag, cargo, A-22 with medium clevis (as required).

c. Personnel. Two persons can prepare and rig this load in 30 minutes. Add 15 minutes rigging time for each A-22 cargo bag.

d. Procedures. The following procedures apply to this load:

(1) Preparation. Prepare the load using the following steps:

(a) Position the two howitzers side by side approximately 18 inches apart at the wheels with the barrels facing the same direction.

(b) Place the honeycomb pad between the two inboard wheels. Slide both howitzers together and lash the wheels together securely with the tiedown straps.

(c) Wrap a sheet of felt around each inboard trail at the center of the load to prevent chafing between trails. Secure the padding with tape or Type III nylon cord. Ensure the lift provisions are exposed.

(d) Secure all howitzer covers and loose equipment with tape or Type III nylon cord.

(e) If the 25,000-pound capacity sling set is used, remove the trail lift provision pins and install medium clevises. Reinstall the lift provision pins ensuring the pins are over the bell portion of the clevises.

(f) If required, inspect and prepare the A-22 cargo bag in accordance with FM 10-450-3 as close as possible to the gun trails.

(g) Set the handbrake.

(2) Rigging. Rig the load according to the steps in Figure 6-4.

(3) Hookup. Two hookup teams are required for this load. The static wand person stands on the trail of the howitzer and discharges the static electricity with the static wand. The forward hookup person stands on the inner wheels and places apex fitting 1 onto the forward cargo hook. The aft hookup person stands on the trails and places apex fitting 2 onto the aft cargo hook. The hookup teams then carefully dismount the howitzer and remain close to the load as the helicopter removes slack from the sling legs. When successful hookup is assured, the hookup teams quickly exit the area underneath the helicopter to the designated rendezvous point.

(4) Derigging. Derigging is the reverse of the preparation and rigging procedures in steps d (1) and d (2).

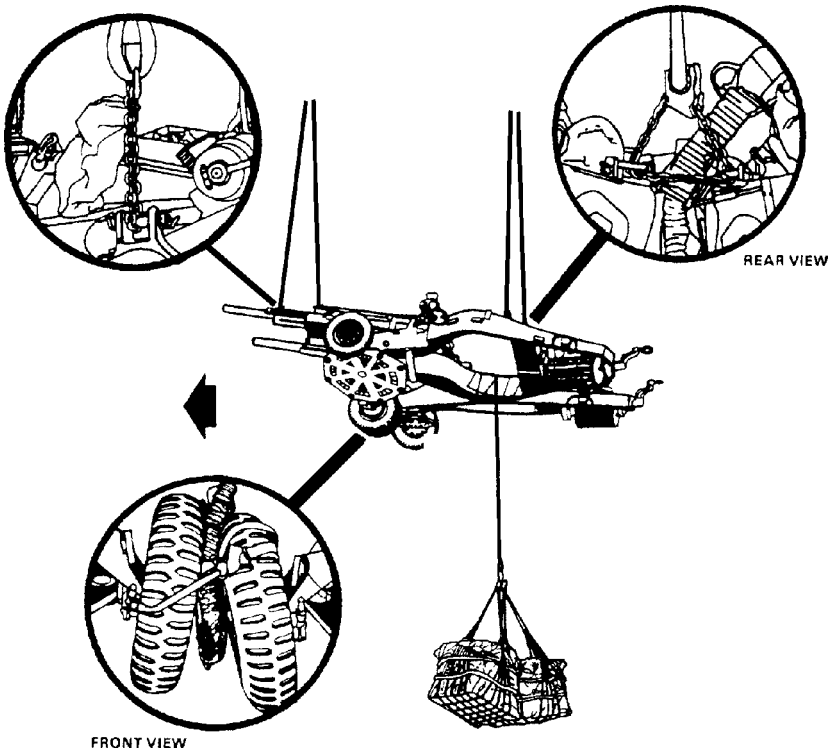

RIGGING STEPS

NOTE: The chain link number inside the parentheses is used for the 10,000-pound capacity sling set.

1. Connect two sling legs to apex fitting number 1. Position the apex fitting on the ground between the barrels of the howitzers.

2. Loop the chain end of sling leg 1 through the lift provision on the barrel of the left howitzer and insert link 42 (60) in the grab hook. Repeat with sling leg 2 on the lift provision on the barrel of the right howitzer. Secure excess chain with tape or Type III nylon cord.

3. Connect three sling legs to apex fitting number 2. Position the apex fitting on the two inner wheels.

4. Route outer sling legs 1 and 2 to the outboard trails of the left and right howitzers respectively. Route inner sling leg 3 to the two inboard trails.

5. Loop the chain end of sling leg 1 through the lift provision or medium clevis on the outboard trail of the left howitzer and insert link 3 (3) in the grab hook. Repeat with sling leg 2 on the lift provision on the outboard trail of the right howitzer.

6. Loop the chain end of inner sling leg 3 through the lift provisions or the medium clevises located on the inboard trails of both howitzers and insert link 16 (20) in the grabhook. Secure excess chain with tape or Type III nylon cord.

7. Cluster and tie or tape (breakaway technique) the sling legs in each sling set together to prevent entanglement during hookup and lift-off.

8. If lifting an accompanying load, wrap the chain end of the additional sling leg (s) around the padded inboard trails and insert link 42 (60) in the grab hook. The chain should be as tight as possible. Route the other end of the sling leg under the trail toward the accompanying load. Place the additional apex fitting through the sling leg (s) eyelet. Place the medium clevises of the A-22 cargo bags on the bolt of the apex fitting.

Figure 6-4. Two M102 Howitzers, 105-mm, with or without One, Two, or Three A-22 Cargo Bags

6-6. M198 Howitzer, 155-mm, Towed with External Airlift Travel Lock Assembly

a. Applicability. The following item in Table 6-5 is certified for the helicopter(s) listed in the following table by the US Army Soldier Systems Center:

Table 6-5. M198 Howitzer

NOMENCLATURE	MAX WEIGHT (POUNDS)	SLING SET	LINK COUNT FRONT/ REAR	TYPE OF AIRCRAFT	RECOMMENDED AIRSPEED (KNOTS)
Howitzer, 155-mm, M198 with External Airlift Travel Lock Assembly	15,740	25K	33/3	CH-47	130

b. Materials. The following materials are required to rig this load:

(1) Sling set (25,000-pound capacity) with one additional apex fitting (25,000-pound capacity).

(2) Tape, adhesive, pressure-sensitive, 2-inch wide roll.

(3) Cord, nylon, Type III, 550-pound breaking strength.

(4) Webbing, cotton, 1/4-inch, 80-pound breaking strength.

(5) Felt sheet, cattle hair, Type IV, 1/2-inch or suitable substitute.

(6) Strap, cargo, tiedown, CGU-1/B (as required).

(7) Clevis assembly, large (one per lift provision).

(8) Reach pendant, 11,000- or 25,000-pound capacity (2 each).

c. Personnel. Two persons can prepare and rig this load in 20 minutes.

d. Procedures. The following procedures apply to this load:

(1) Preparation. Prepare the load using the following steps:

(a) Secure the spades to the trails with CGU-1/B tiedown straps.

(b) Secure the air hoses and electrical cable to the outboard side of the right trail with tape or Type III nylon cord.

(c) Stow and secure all equipment in place with tape or Type III nylon cord.

(d) Pad the sight mounts with felt padding. Secure the padding with tape or Type III nylon cord.

(e) Attach a large clevis asembly to the trail and carriage lifting provisions.

(f) Ensure the top carriage locking pin is in place and secured with a locking safety clip.

CAUTION
Do not attempt to lift the howitzer if the top carriage lock pin will not drop into place or if the locking safety clip is missing. Either of these conditions could result in the top carriage rotating in flight.

(g) Position the barrel and install the travel lock. Secure the lock with pins.

(h) Attach a reach pendant to each apex fitting in accordance with FM 10-450-3.

(i) Set the handbrakes.

(2) Rigging. Rig the load according to the steps in Figure 6-5.

(3) Hookup. Two hookup teams are required for this load. The forward hookup person stands on top of the

gun carriage and places apex fitting 1 onto the forward cargo hook. The aft hookup person stands on the firing base plate and places apex fitting 2 onto the aft cargo hook. The hookup teams then carefully dismount the howitzer and remain close to the load as the helicopter removes slack from the sling legs. When successful hookup is assured, the hookup team quickly exits the area underneath the helicopter to the designated rendezvous point.

NOTE: The helicopter must approach the howitzer over the trails.

(4) Derigging. Derigging is the reverse of the preparation and rigging procedures in steps d (1) and d (2).

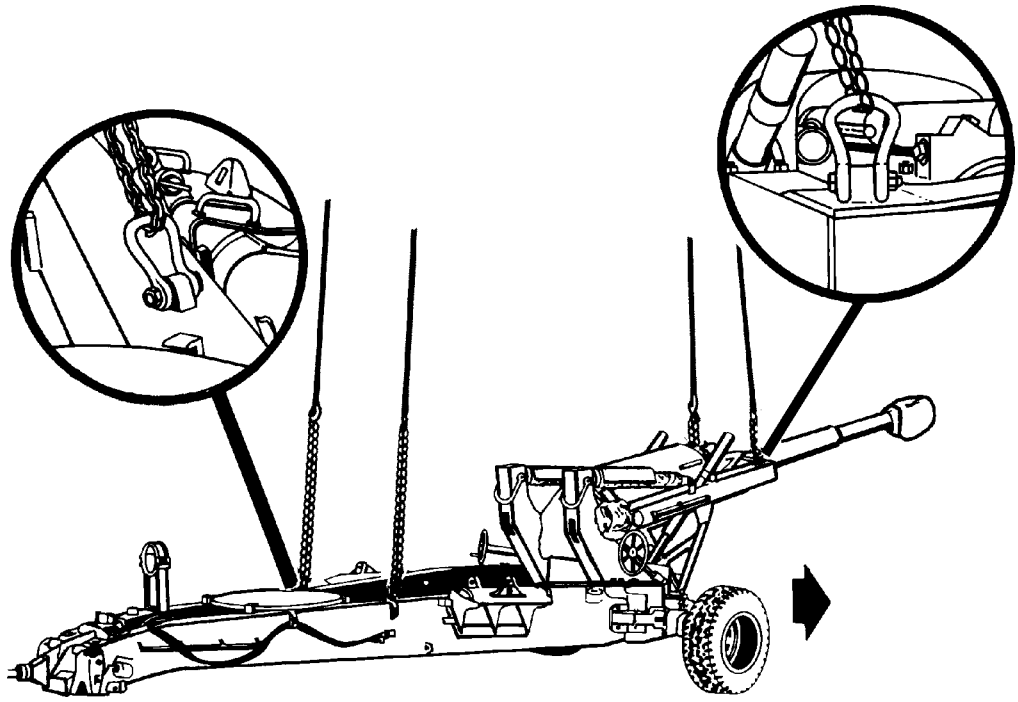

RIGGING STEPS

1. Connect two sling legs to apex fitting number 1. Position the sling set on top of the forward end of the breech.

2. Loop the chain end of the sling legs through the large clevises installed on their respective lift provisions located on the carriage. Place the correct link from Table 6-5 in the grab hook. Secure excess chain with tape or Type III nylon cord.

3. Connect two sling legs to apex fitting number 2. Position the sling set on top of the baseplate between the trails.

4. Loop the chain end of the sling legs through the large clevises installed on their respective lift provisions located on the trails. Place the correct link from Table 6-5 in the grab hook. Secure excess chain with tape or Type III nylon cord.

5. Cluster and tie or tape (breakaway technique) the sling legs in each sling set together to prevent entanglement during hookup and lift-off.

Figure 6-5. M198 Howitzer

6-7. M167 20-mm AA Gun (Vulcan)

a. Applicability. The following item in Table 6-6 is certified for the helicopter(s) listed in the following table by the US Army Soldier Systems Center:

Table 6-6. M167 20-mm AA Gun (Vulcan)

NOMENCLATURE	MAX WEIGHT (POUNDS)	SLING SET	LINK COUNT FRONT/ REAR	TYPE OF AIRCRAFT	RECOMMENDED AIRSPEED (KNOTS)
Antiaircraft Gun, 20-mm, M167	3,260	10K	80/3	CH-47	85

b. Materials. The following materials are required to rig this load:

(1) Sling set (10,000-pound capacity) with one additional apex fitting.

(2) Tape, adhesive, pressure-sensitive, 2-inch wide roll.

(3) Cord, nylon, Type III, 550-pound breaking strength.

(4) Webbing, cotton, 1/4-inch, 80-pound breaking strength.

c. Personnel. Two persons can prepare and rig this load in 20 minutes.

d. Procedures. The following procedures apply to this load:

(1) Preparation. Prepare the load using the following steps:

(a) Position the radar antenna assembly to point directly upward.

(b) Place the cover on the gun and secure with Type III nylon cord.

(c) Secure any loose equipment with tape or Type III nylon cord.

(d) Extend and secure the rear trails in the down position.

(e) Engage the hand brakes and install lifting shackles on the tongue and trails.

(2) Rigging. Rig the load according to the steps in Figure 6-6.

(3) Hookup. Two hookup teams are required for this load. The static wand person discharges the static electricity with the static wand. One hookup person stands on the tongue and places apex fitting 1 onto the aft cargo hook. The other hookup person stands on the gunner's seat or on the trailer frame on the same side as the radar dish and places apex fitting 2 onto the forward cargo hook. The hookup teams then carefully dismount the gun and remain close to the load as the helicopter removes slack from the sling legs. When successful hookup is assured, the hookup team quickly exits the area underneath the helicopter to the designated rendezvous point.

NOTE: Advise the aircraft commander to release the apex fittings on the side of the gun away from the radar antenna to prevent damage to the radar unit.

(4) Derigging. Derigging is the reverse of the preparation and rigging procedures in steps d (1) and d (2).

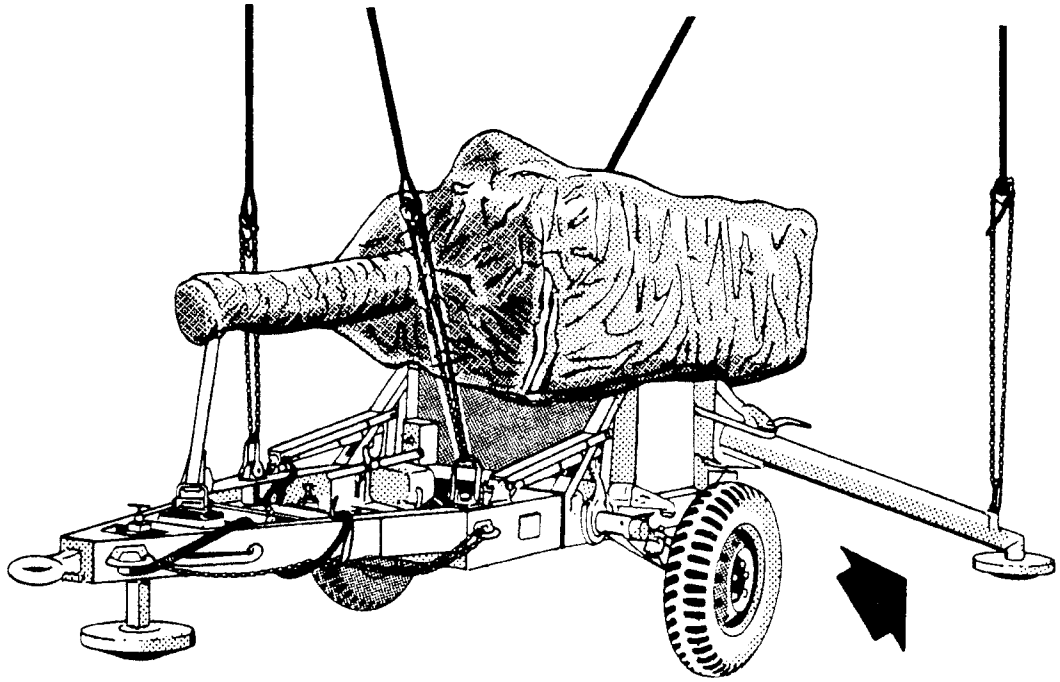

RIGGING STEPS

1. Place two sling legs on apex fitting number 1. Position apex fitting number 1 on top of the barrel.

2. Loop the chain end of the left and right sling legs through their respective lift provision on the tongue of the gun. Place the correct link from Table 6-6 in the grab hook. Secure excess chain with tape or Type III nylon cord.

3. Place two sling legs on apex fitting number 2. Position apex fitting number 2 between the two rear trails.

4. Loop the chain end of the left and right sling legs through their respective lift provision on the lower end of each rear trail. Place the correct link from Table 6-6 in the grab hook.

5. Cluster and tie or tape (breakaway technique) the sling legs in each sling set together to prevent entanglement during hookup and lift-off.

Figure 6-6. M167 20-mm AA Gun (Vulcan)

CHAPTER 7

CERTIFIED DUAL-POINT RIGGING PROCEDURES FOR MISSILE SYSTEMS

7-1. INTRODUCTION

This chapter contains rigging procedures for dual-point missile system loads that have been certified for sling load. Each rigging procedure is found in a paragraph that includes a description of the load, materials required for rigging, and steps to complete the procedure. An applicability paragraph is also a part of each paragraph and identifies the certified loads. The certified dual-point rigging procedures for missile system loads are in this section. Paragraphs 7-2 through 7-14 give detailed instructions for rigging loads.

NOTE: Reach Pendants may be used on dual point loads. Place a Reach Pendant on each apex fitting. A static discharge person is not required when using a Reach Pendant.

7-2. M54A1/M54A2 Chaparral Launch Station

a. Applicability. The following items in Table 7-1 are certified for the helicopter(s) listed in the following table by the US Army Soldier Systems Center:

Table 7-1. M54A1/M54A2 Chaparral Launch Station

NOMENCLATURE	MAX WEIGHT (POUNDS)	SLING SET	LINK COUNT FRONT/ REAR	TYPE OF AIRCRAFT	RECOMMENDED AIRSPEED (KNOTS)
M54A1 Launch Station	13,000	25K	3/3	CH-47	100
M54A2 Launch Station	13,000	25K	3/3	CH-47	100

b. Materials. The following materials are required to rig this load:

(1) Sling set (25,000-pound capacity) with one additional apex fitting.

(2) Tape, adhesive, pressure-sensitive, 2-inch wide roll.

(3) Cord, nylon, Type III, 550-pound breaking strength.

(4) Webbing, cotton, 1/4-inch, 80-pound breaking strength.

c. Personnel. Two persons can prepare and rig this load in 20 minutes.

d. Procedures. The following procedures apply to this load:

(1) Preparation. Prepare the load using the following steps:

(a) Prepare the launch station for sling loading in accordance with TM 9-1425-2585-10-1.

(b) Rotate the missile pedestal 90 degrees from the centerline to avoid sling interference.

(2) Rigging. Rig the load according to the steps in Figure 7-1.

(3) Hookup. Two hookup teams are required for this load. The hookup teams stand on the back of the gunner's compartment. The static wand person discharges the static electricity with the static wand. The forward hookup person places apex fitting 1 onto the forward cargo hook. The aft hookup person places apex fitting 2 onto the aft

cargo hook. The hookup teams then carefully dismount the missile platform and remain close to the load as the helicopter removes slack from the sling legs. When successful hookup is assured, the hookup teams quickly exit the area underneath the helicopter to the designated rendezvous point.

(4) Derigging. Derigging is the reverse of the preparation and rigging procedures in steps d (1) and d (2).

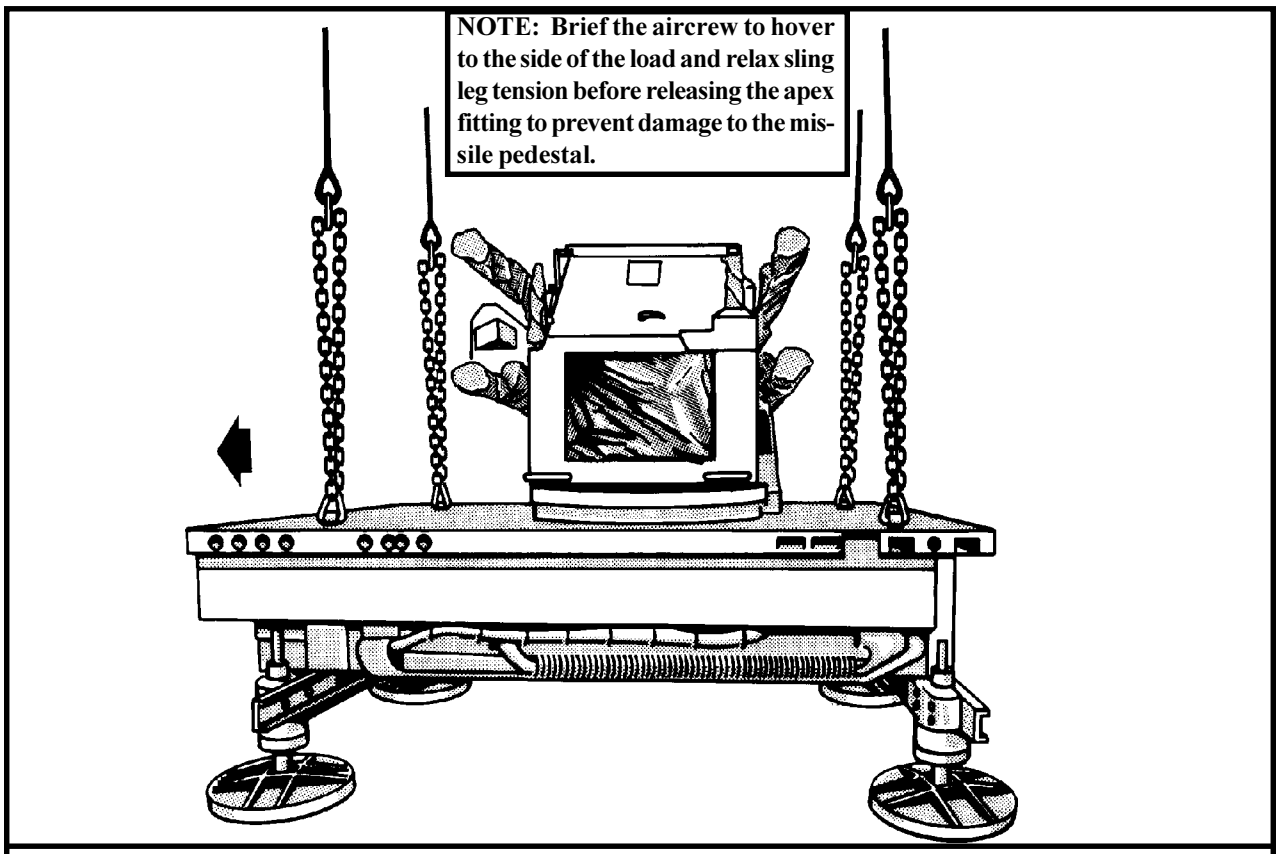

RIGGING STEPS

1. Connect two sling legs to apex fitting number 1. Position the sling set on top of the main power unit end of the platform.

2. Loop the chain end of the left and right sling legs through their respective lift provisions. Place the correct link from Table 7-1 in the grab hook.

3. Connect two sling legs to apex fitting number 2. Position the sling set on top of the opposite end of the platform.

4. Loop the chain end of the left and right sling legs through their respective lift provisions. Place the correct link from Table 7-1 in the grab hook.

5. Cluster and tie or tape (breakaway technique) the sling legs in each sling set together to prevent entanglement during hookup and lift-off.

Figure 7-1. M54A1/M54A2 Chaparral Launch Station

7-3. Pedestal-Mounted Stinger (Avenger)

a. Applicability. The following items in Table 7-2 are certified for the helicopter(s) listed in the following table by the US Army Soldier Systems Center:

Table 7-2. Pedestal-Mounted Stinger (Avenger)

NOMENCLATURE	MAX WEIGHT (POUNDS)	SLING SET	LINK COUNT FRONT/ REAR	TYPE OF AIRCRAFT	RECOMMENDED AIRSPEED (KNOTS)
Stinger, Pedestal-Mounted on M998, (Avenger)	8,513	10K	50/5	CH-47	120
Stinger, Pedestal-Mounted on M1097, (Avenger)	9,087	10K	50/5	CH-47	120
Stinger, Pedestal-Mounted on M998, (Avenger)	8,513	15K	40/5	CH-53	120
Stinger, Pedestal-Mounted on M1097, (Avenger)	9,087	15K	40/5	CH-53	120
Stinger, Pedestal-Mounted on M998, (Avenger)	8,513	40K	32/4	CH-53	120
Stinger, Pedestal-Mounted on M1097, (Avenger)	9,087	40K	32/4	CH-53	120

b. Materials. The following materials are required to rig this load:

(1) Sling set (10,000- or 40,000-pound capacity) with one additional apex fitting for the sling set being used or two 15,000-pound capacity sling sets.

(2) Tape, adhesive, pressure-sensitive, 2-inch wide roll.

(3) Cord, nylon, Type III, 550-pound breaking strength.

(4) Webbing, cotton, 1/4-inch, 80-pound breaking strength.

c. Personnel. Two persons can prepare and rig this load in 15 minutes.

d. Procedures. The following procedures apply to this load:

(1) Preparation. Prepare the load using the following steps:

(a) Fold the mirrors inward and secure with Type III nylon cord.

(b) Ensure the Avenger fire unit is secured to the truck. Secure all equipment inside the fire unit with tape, lashings , or Type III nylon cord. Close and secure the door.

(c) Disconnect the standard vehicle-mounted launcher connectors from the missile pods and secure them to the fire unit with tape or Type III nylon cord.

(d) Secure all equipment inside the vehicle with tape or Type III nylon cord. Secure the doors shut (if installed).

(e) Ensure the fuel tank is not over 3/4 full. Inspect the fuel tank cap, oil filler cap, and battery caps for proper installation.

(f) Engage the vehicle parking brake and place the transmission in neutral.

(g) Ensure the front wheels are pointed straight ahead. Tie down the steering wheel using the securing device attached under the dashboard.

(2) Rigging. Rig the load according to the steps in Figure 7-2.

(3) Hookup. Two hookup teams are required for this load. The hookup teams stand on top of the firing unit. The static wand person discharges the static electricity with the static wand. The forward hookup person places apex fitting 1 onto the forward cargo hook. The aft hookup person places apex fitting 2 onto the aft cargo hook. The hookup teams then carefully dismount the vehicle and remain close to the load as the helicopter removes slack from the sling legs. When successful hookup is assured, the hookup teams quickly exit the area underneath the helicopter to the designated rendezvous point.

(4) Derigging. Derigging is the reverse of the preparation and rigging procedures in steps d (1) and d (2).

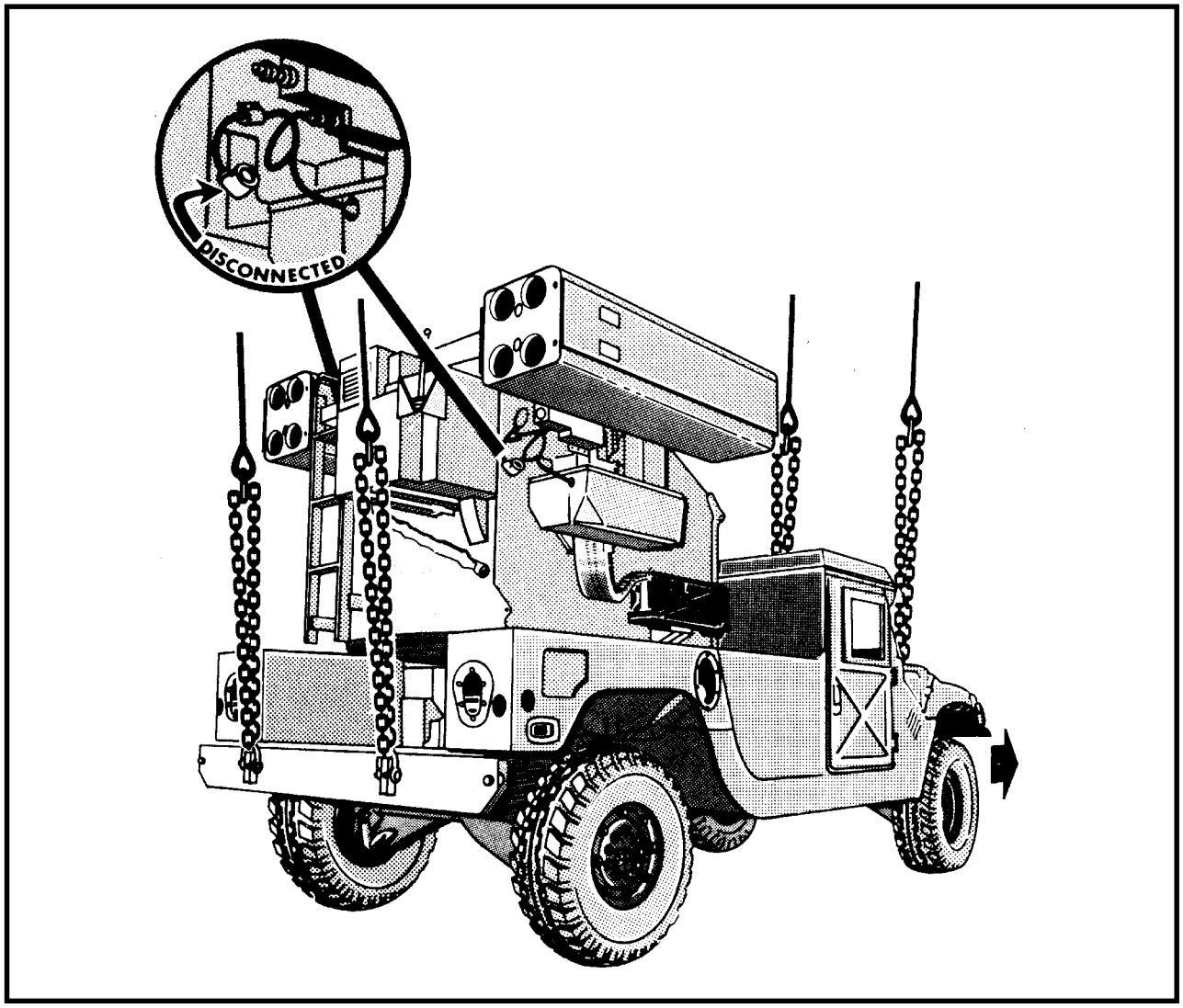

Figure 7-2. Pedestal-Mounted Stinger (Avenger)

RIGGING STEPS

NOTE: When using the 15,000-pound capacity sling set, do not remove the two inner sling leg assemblies. Tape the two inner unused sling legs to the two outer load-carrying sling legs.

1. Place two sling legs on apex fitting number 1. Position apex fitting number 1 on top of the firing unit.

2. Loop the chain end of the left and right sling legs through their respective lift provisions that protrude through the hood of the vehicle. Place the correct link from Table 7-2 in the grab hook. Secure excess chain with tape or Type III nylon cord.

3. Place two sling legs on apex fitting number 2. Position apex fitting number 2 on top of the firing unit.

4. Loop the chain end of the left and right sling legs through their respective lift provisions located on the rear bumper. Place the correct link from Table 7-2 in the grab hook.

CAUTION
DO NOT PLACE THE SLING LEGS IN THE SLING LEG GUIDES LOCATED ON TOP OF THE FIRING UNIT.

5. Cluster and tie or tape (breakaway technique) the sling legs in each sling set together to prevent entanglement during hookup and lift-off.

Figure 7-2. Pedestal-Mounted Stinger (Avenger) (continued)

7-4. AN/MPQ-57 and AN/MPQ-61 High-Power Illuminator Radar (HIPIR) Phase II and Phase III Mounted on the M390 (Modified) Trailer

a. Applicability. The following items, components of the Hawk missile system, in Table 7-3 are certified for the helicopter(s) listed in the following table by the US Army Soldier Systems Center:

Table 7-3. AN/MPQ-57 and AN/MPQ-61 High-Power Illuminator Radar (HIPIR)

NOMENCLATURE	MAX WEIGHT (POUNDS)	SLING SET	LINK COUNT FRONT/ REAR	TYPE OF AIRCRAFT	RECOMMENDED AIRSPEED (KNOTS)
AN/MPQ-57 High-Power Illuminator Radar on M390 Trailer, Phase II	9,480	25K	25/3	CH-47	110
AN/MPQ-61 High-Power Illuminator Radar on M390 Trailer, Phase III	9,530	25K	25/3	CH-47	110

b. Materials. The following materials are required to rig this load:

(1) Sling set (25,000-pound capacity) with one additional apex fitting .

(2) Tape, adhesive, pressure-sensitive, 2-inch wide roll.

(3) Cord, nylon, Type III, 550-pound breaking strength.

(4) Webbing, cotton, 1/4-inch, 80-pound breaking strength.

(5) Reach pendant (11,000- or 25,000-pound capacity) (2 each).

CAUTION
DO NOT MIX DIFFERENT CAPACITY REACH PENDANTS. USE TWO 11,000-POUND CAPACITY OR TWO 25,000-POUND CAPACITY REACH PENDANTS.

c. Personnel. Two persons can prepare and rig this load in 15 minutes.

d. Procedures. The following procedures apply to this load:

(1) Preparation. Prepare the load using the following steps:

(a) Ensure the 3 1/4-ton shackles initially provided with the M390C trailer chassis have been replaced by 6 3/4-ton clevises (NSN 4030-00-278-0699). Ensure the clevises are properly pinned and are not damaged.

(b) Prepare the HIPIR for travel according to the operator's manual and engage the parking brakes.

(c) Rotate the azimuth STOW lock clockwise until the stow pin is fully engaged with the torque tube and the antenna cannot be further moved in either direction. The antenna must face the lunette end of the trailer and be tilted slightly downward toward the ground. Secure the stow pin with tape or Type III nylon cord.

(d) Remove the dust covers from the radar antennas.

(e) Install the VTG sensor unit dust cover, if applicable.

(f) Secure all tools and equipment inside the drawers and cabinets. Secure all doors and drawers with tape or Type III nylon cord.

(g) Secure all hoses, cables, and chains to the trailer chassis or surrounding structure with tape or Type III nylon cord.

(h) Adjust the forward and rear leveling jacks to just above ground level so the HIPIR does not flip during takeoff or landing.

(i) Install a reach pendant on each of the apex fittings of the sling set.

(2) Rigging. Rig the load according to the steps in Figure 7-3.

(3) Hookup. Two hookup persons are required for this load. The forward hookup person stands on the radar set group cabinet and places reach pendant 1 onto the forward cargo hook. The aft hookup person stands on the transmitter group cabinet (lunette end) and places reach pendant 2 onto the aft cargo hook. The hookup teams then carefully dismount the HIPIR and remain close to the load as the helicopter removes slack from the sling legs. When successful hookup is assured, the hookup teams quickly exit the area underneath the helicopter to the designated rendezvous point.

(4) Derigging. Derigging is the reverse of the preparation and rigging procedures in steps d (1) and d (2).

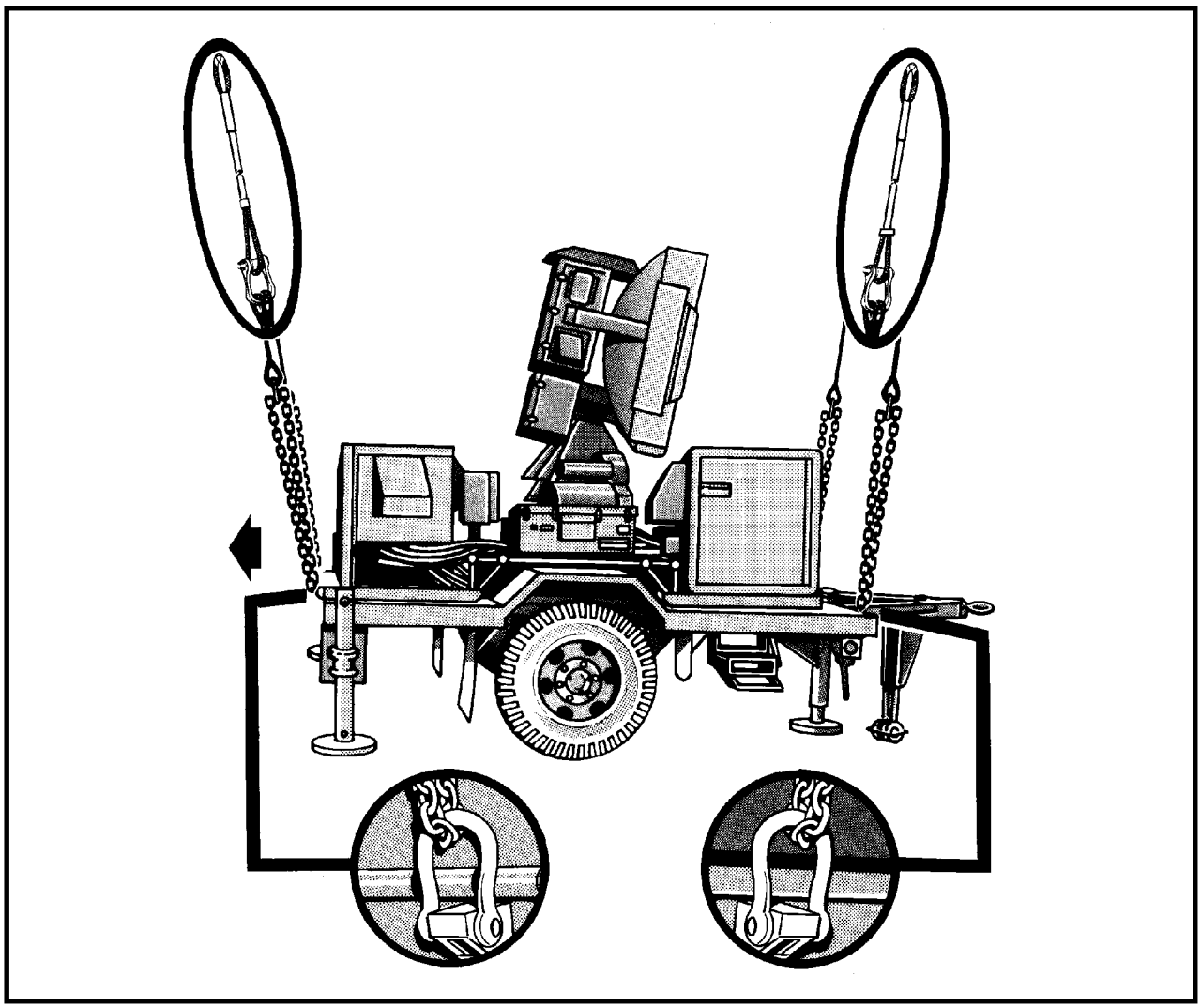

Figure 7-3. AN/MPQ-57 and AN/MPQ-61 High-Power Illuminator Radar (HIPIR)

RIGGING STEPS

1. Place two sling legs on apex fitting number 1. Position apex fitting and reach pendant number 1 on top of the transmitter group cabinet (trailer lunette end).

2. Loop the chain end of the left and right sling legs through their respective lift provisions located on the front corners of the trailer chassis. Place the correct link from Table 7-3 in the grab hook. Secure the excess chain with tape or Type III nylon cord.

3. Pull the chain legs up and tape or tie (breakaway technique) the grabhooks to the top of the transmitter group cabinet.

4. Place two sling legs on apex fitting number 2. Position apex fitting and reach pendant number 2 on the radar set group cabinet.

5. Loop the chain end of the left and right sling legs through their respective lift provisions located on the rear corners of the trailer chassis. Place the correct link from Table 7-3 in the grab hook.

6. Pull the chain legs up and tape or tie (breakaway technique) the grabhooks to the top of the radar set group cabinet.

7. Cluster and tie or tape (breakaway technique) the sling legs in each sling set together to prevent entanglement during hookup and lift-off.

Figure 7-3. AN/MPQ-57 and AN/MPQ-61 High-Power Illuminator Radar (HIPIR) (continued)

7-5. HAWK Missile Launcher with or without Missiles

a. Applicability. The following items, components of the Hawk missile system, in Table 7-4 are certified for the helicopter(s) listed in the following table by the US Army Soldier Systems Center:

Table 7-4. HAWK Missile Launcher with or without Missiles

NOMENCLATURE	MAX WEIGHT (POUNDS)	SLING SET	LINK COUNT FRONT/ REAR	TYPE OF AIRCRAFT	RECOMMENDED AIRSPEED (KNOTS)
Missile Launcher, Empty	5,060	25K	72/80	CH-47	120
Missile Launcher with One Missile, Center Mounted	6,460	25K	72/80	CH-47	120
Missile Launcher with Two Missiles, Mounted on Sides	7,860	25K	72/80	CH-47	120
Missile Launcher with Three Missiles, Full Payload	9,260	25K	72/80	CH-47	120

b. Materials. The following materials are required to rig this load:

(1) Sling set (25,000-pound capacity) with one additional apex fitting .

(2) Tape, adhesive, pressure-sensitive, 2-inch wide roll.

(3) Cord, nylon, Type III, 550-pound breaking strength.

(4) Webbing, cotton, 1/4-inch, 80-pound breaking strength.

(5) Reach pendant (11,000- or 25,000-pound capacity) (2 each)

CAUTION
DO NOT MIX DIFFERENT CAPACITY REACH PENDANTS. USE TWO 11,000-POUND CAPACITY OR TWO 25,000-POUND CAPACITY REACH PENDANTS.

c. Personnel. Two persons can prepare and rig this load in 20 minutes.

d. Procedures. The following procedures apply to this load:

(1) Preparation. Prepare the load using the following steps:

(a) Prepare the HAWK launcher and missiles for travel according to instructions in the operator's manual.

(b) Ensure each missile is properly locked into the appropriate rack on the pallet. If one missile is to be mounted, it must be on the upper center missile storage rack. If two missiles are to be mounted, they must be on the two outer missile storage racks.

(c) Engage the parking brakes.

(d) Adjust the leveling jack pads to just above ground level.

(e) Secure all hoses, cables, and chains to the adjacent structure with tape or Type III nylon cord.

(f) Secure the hydraulic valve box on the side of the launcher boom with tape.

(g) Install a reach pendant on each of the apex fittings of the sling set.

(2) Rigging. Rig the load according to the steps in Figure 7-4.

(3) Hookup. Two hookup persons are required for this load. The forward hookup person stands on the aft end of the launcher, **NOT on the missiles,** and places reach pendant 1 onto the forward cargo hook. The aft hookup person stands on the lunette end, **NOT on the missiles,** and places reach pendant 2 onto the aft cargo hook. The hookup teams then carefully dismount the launcher and remain close to the load as the helicopter removes slack from the sling legs. When successful hookup is assured, the hookup teams quickly exit the area underneath the helicopter to the designated rendezvous point.

(4) Derigging. Derigging is the reverse of the preparation and rigging procedures in steps d (1) and d (2).

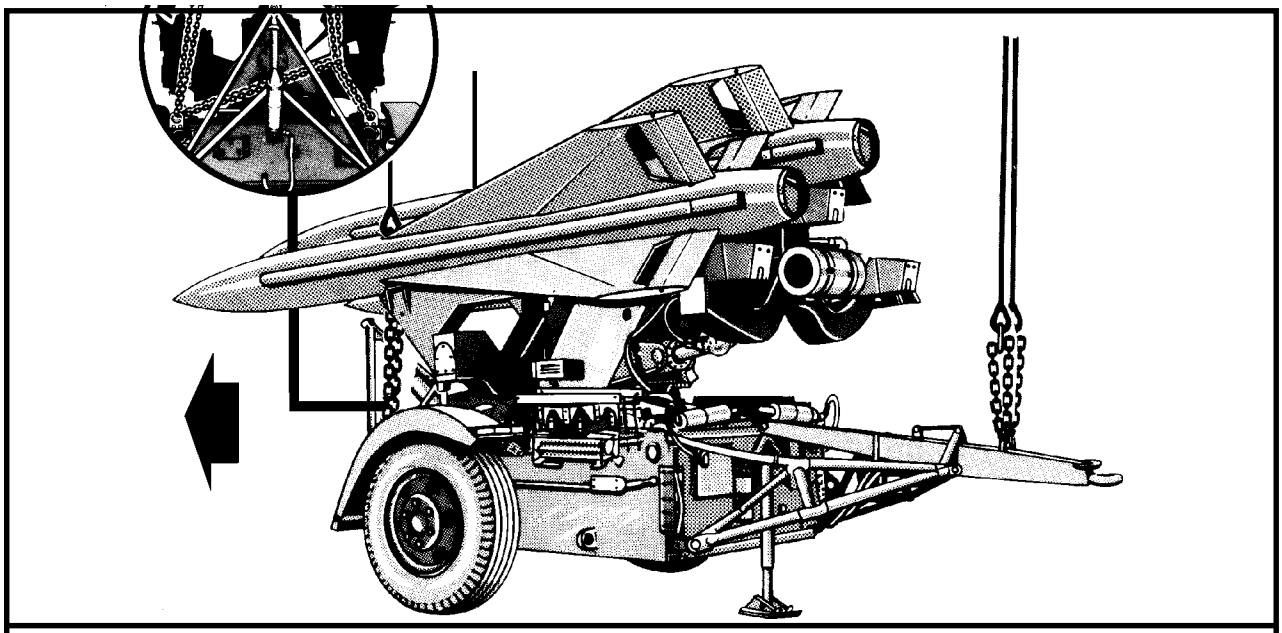

RIGGING STEPS

1. Place two sling legs on apex fitting number 1. Position apex fitting and reach pendant number 1 on top of the launcher lunette.

2. Loop the chain end of the left sling leg through the lift provision located on the A-frame aft of the lunette. Pull the chain up the outside of the left side of the launcher. Place the correct link from Table 7-4 in the grab hook. Secure the excess chain with tape or Type III nylon cord.

3. Loop the chain end of the right sling leg through the lift provision located on the A-frame aft of the lunette. Pull the chain up the outside of the right side of the launcher. Place the correct link from Table 7-4 in the grab hook. Secure the excess chain with tape or Type III nylon cord.

4. Place two sling legs on apex fitting number 2. Position apex fitting and reach pendant number 2 on top of the launcher boom.

5. Route the left sling leg between the center missile and the left missile. Loop the chain end through the lift provision located on the left rear corner of the launcher. Place the correct link from Table 7-4 in the grab hook. Secure the excess chain with tape or Type III nylon cord.

6. Route the right sling leg between the center missile and the right missile. Loop the chain end through the lift provision located on the right rear corner of the launcher. Place the correct link from Table 7-4 in the grab hook. Secure the excess chain with tape or Type III nylon cord.

7. Cluster and tie or tape (breakaway technique) the sling legs in each sling set together to prevent entanglement during hookup and lift-off.

Figure 7-4. HAWK Missile Launcher with or without Missiles

7-6. HAWK Missile Launcher with Missiles (Offset Configuration)

a. Applicability. The following items, components of the Hawk missile system, in Table 7-5 are certified for the helicopter(s) listed in the following table by the US Army Soldier Systems Center:

Table 7-5. HAWK Missile Launcher with Missiles (Offset Configuration)

NOMENCLATURE	MAX WEIGHT (POUNDS)	SLING SET	LINK COUNT FRONT/ REAR	TYPE OF AIRCRAFT	RECOMMENDED AIRSPEED (KNOTS)
Launcher with One Missile Mounted on the Side	6,460	25K	As Listed in Rigging Steps	CH-47	120
Launcher with Two Missiles, Mounted on the Side and Center	7,860	25K	As Listed in Rigging Steps	CH-47	120

b. Materials. The following materials are required to rig this load:

(1) Sling set (25,000-pound capacity) with one additional apex fitting.

(2) Tape, adhesive, pressure-sensitive, 2-inch wide roll.

(3) Cord, nylon, Type III, 550-pound breaking strength.

(4) Webbing, cotton, 1/4-inch, 80-pound breaking strength.

(5) Chain assembly, tiedown, MB-1 (10,000-pound capacity), NSN 1670-00-516-8405.

(6) Reach pendant (11,000- or 25,0000-pound capacity) (2 each).

CAUTION
DO NOT MIX DIFFERENT CAPACITY REACH PENDANTS. USE TWO 11,000-POUND CAPACITY OR TWO 25,000-POUND CAPACITY REACH PENDANTS.

c. Personnel. Two persons can prepare and rig this load in 20 minutes.

d. Procedures. The following procedures apply to this load:

(1) Preparation. Prepare the load using the following steps:

(a) Prepare the HAWK launcher and missiles for travel according to instructions in the operator's manual.

(b) Ensure each missile is properly locked into the appropriate rack on the pallet.

(c) Engage the parking brakes.

(d) Adjust the leveling jack pads to just above ground level.

(e) Secure all hoses, cables, and chains to the adjacent structure with tape or Type III nylon cord.

(f) Secure the hydraulic valve box on the side of the launcher boom with tape.

(g) Install a reach pendant on each of the apex fittings of the sling set.

(2) Rigging. Rig the load according to the steps in Figure 7-5.

(3) Hookup. Two hookup persons are required for this load. The forward hookup person stands on the aft end of the launcher, **NOT on the missiles,** and places reach pendant 1 onto the forward cargo hook. The aft hookup person stands on the lunette end, **NOT on the missiles,** and

places reach pendant 2 onto the aft cargo hook. The hookup teams then carefully dismount the launcher and remain close to the load as the helicopter removes slack from the sling legs. When successful hookup is assured, the hookup teams quickly exit the area underneath the helicopter to the designated rendezvous point.

NOTE: The helicopter should hover forward of the load when releasing the forward hook and hover to the rear of the load when releasing the aft hook to avoid dropping the reach pendants on the missiles.

(4) Derigging. Derigging is the reverse of the preparation and rigging procedures in steps d (1) and d (2).

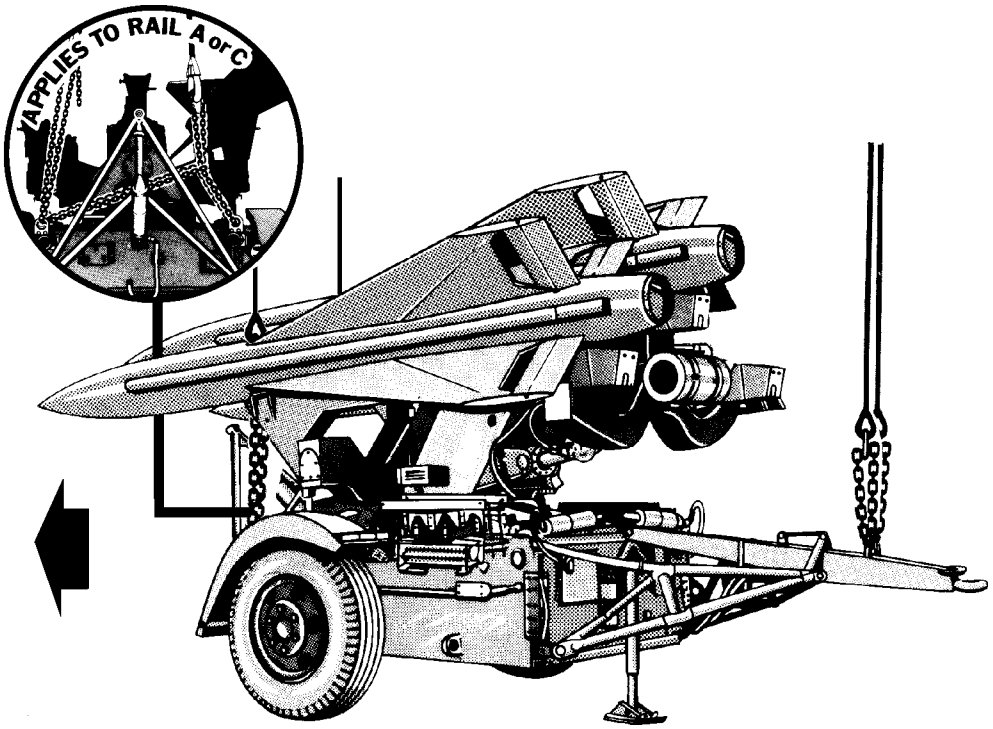

RIGGING STEPS

1. Place two sling legs on apex fitting number 1. Position apex fitting and reach pendant number 1 on top of the launcher lunette.

2. Loop the chain end of the left sling leg through the lift provision located on the A-frame aft of the lunette. Pull the chain up the outside of the left side of the launcher. Place link 22 in the grab hook. Secure the excess chain with tape or Type III nylon cord.

3. Loop the chain end of the right sling leg through the lift provision located on the A-frame aft of the lunette. Pull the chain up the outside of the right side of the launcher. Place link 22 in the grab hook. Secure the excess chain with tape or Type III nylon cord.

Figure 7-5. HAWK Missile Launcher with Missiles (Offset Configuration)

RIGGING STEPS (continued)

NOTE: The missiles are designated as follows:
"A" missile - curbside position, on the left side when facing the lunette end
"B" missile - center position
"C" missile - roadside position, on the right when facing the lunette end

4. Place two sling legs on apex fitting number 2. Position apex fitting and reach pendant number 2 on top of the launcher boom.

5. If "A" missile is mounted with or without "B" missile, route the right sling leg between "B" missile (if mounted) and "A" missile. Loop the chain end through the lift provision located on the right rear corner of the launcher. Place link 26 in the grab hook. Secure the excess chain with tape or Type III nylon cord.

6. Loop the chain end of the left sling leg through the lift provision located on the left rear corner of the launcher. Place link 6 in the grab hook.

7. Use an MB-1 (10,000-pound capacity) chain tiedown assembly to snub the right sling leg. Loop the snubber chain through the left rear lift provision and around the right sling leg chain. Chain to itself so the loop is 47 inches. Tape the snubber chain in place.

8. If "C" missile is mounted with or without "B" missile, route the left sling leg between "B" missile (if mounted) and "C" missile. Loop the chain end through the lift provision located on the left rear corner of the launcher. Place link 26 in the grab hook. Secure the excess chain with tape or Type III nylon cord.

9. Loop the chain end of the right sling leg through the lift provision located on the right rear corner of the launcher. Place link 6 in the grab hook.

10. Use an MB-1 (10,000-pound capacity) chain tiedown assembly to snub the left sling leg. Loop the snubber chain through the right rear lift provision and around the left sling leg chain. Chain to itself so the loop is 47 inches. Tape the snubber chain in place.

11. Cluster and tie or tape (breakaway technique) the sling legs in each sling set together to prevent entanglement during hookup and lift-off.

Figure 7-5. HAWK Missile Launcher with Missiles (Offset Configuration) (continued)

7-7. M192-1 HAWK Zero Length Missile Launcher (USMC)

a. Applicability. The following item, a component of the Hawk missile system, in Table 7-6 is certified for the helicopter(s) listed in the following table by the US Army Soldier Systems Center:

Table 7-6. M192-1 HAWK Zero Length Missile Launcher (USMC)

NOMENCLATURE	MAX WEIGHT (POUNDS)	SLING SET	LINK COUNT FRONT/ REAR	TYPE OF AIRCRAFT	RECOMMENDED AIRSPEED (KNOTS)
M192-1 Guided Missile Launcher, Zero Length	4,500	40K	25/34	CH-53	130

b. Materials. The following materials are required to rig this load:

(1) Sling set (40,000-pound capacity) with one additional apex fitting .

(2) Tape, adhesive, pressure-sensitive, 2-inch wide roll.

(3) Cord, nylon, Type III, 550-pound breaking strength.

(4) Webbing, cotton, 1/4-inch, 80-pound breaking strength.

c. Personnel. Two persons can prepare and rig this load in 20 minutes.

d. Procedures. The following procedures apply to this load:

(1) Preparation. Prepare the load using the following steps:

(a) Prepare the HAWK launcher for travel according to instructions in the operator's manual.

(b) Secure all doors and vents with tape or Type III nylon cord.

(c) Engage the parking brakes.

(d) Secure all hoses, cables, and chains to the adjacent structure with tape or Type III nylon cord.

(e) Place and secure the launcher section control box inside the helicopter.

(2) Rigging. Rig the load according to the steps in Figure 7-6.

(3) Hookup. Two hookup persons are required for this load. The forward hookup person stands on the side of the pedestal and places apex fitting number 1 onto the forward cargo hook. The aft hookup person stands on the other side of the pedestal and places apex fitting number 2 onto the aft cargo hook. The hookup teams then carefully dismount the launcher and remain close to the load as the helicopter removes slack from the sling legs. When successful hookup is assured, the hookup teams quickly exit the area underneath the helicopter to the designated rendezvous point.

(4) Derigging. Derigging is the reverse of the preparation and rigging procedures in steps d (1) and d (2).

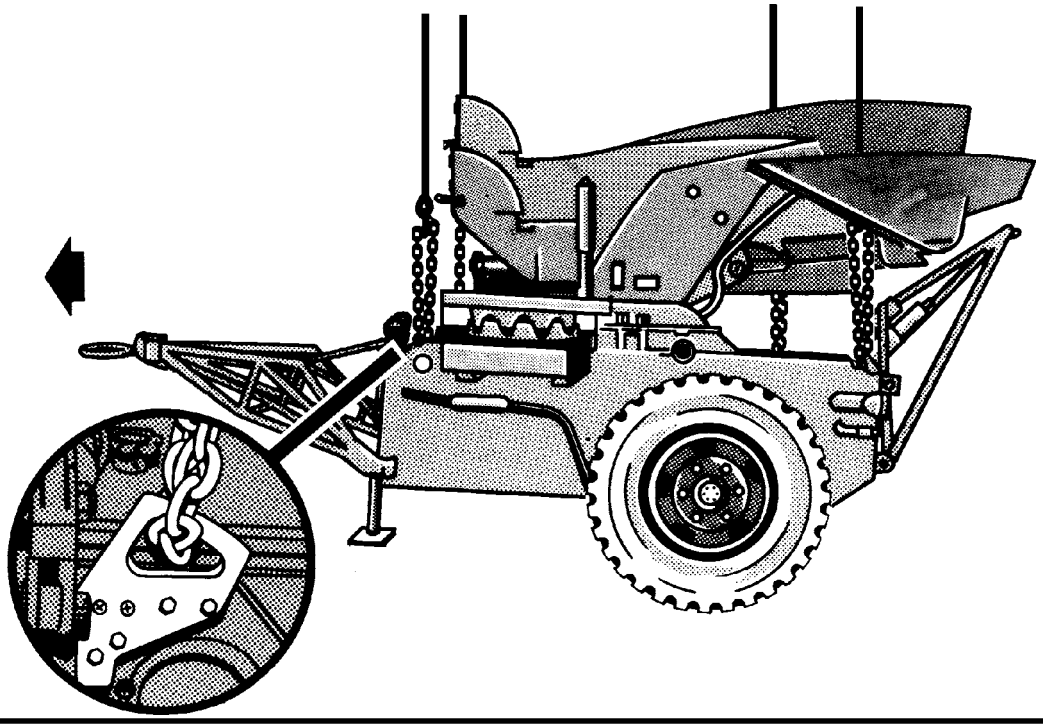

RIGGING STEPS

1. Place two sling legs on apex fitting number 1. Position apex fitting number 1 on top of the launch stand pedestal (lunette end).

2. Route the sling legs to the front of the launcher. Remove the access panel to improve clearance and loop the chain end of the left and right sling legs through their respective lift provisions located aft of the level cylinder, on the outboard side. Ensure the chain is routed from the inside to the outside with the chain running end facing outward. Place the correct link from Table 7-6 in the grab hook. Secure the excess chain with tape or Type III nylon cord. Replace and secure the access panel.

3. Place two sling legs on apex fitting number 2. Position apex fitting number 2 on top of the launch stand pedestal.

4. Route the sling legs to the rear of the launcher. Remove the access panel to improve clearance and loop the chain end of the left and right sling legs through their respective lift provisions located above the taillights. Ensure the chain is routed from the inside to the outside with the chain running end facing outward. Place the correct link from Table 7-6 in the grab hook. Secure the excess chain with tape or Type III nylon cord. Replace and secure the access panel.

5. Cluster and tie or tape (breakaway technique) the sling legs in each sling set together to prevent entanglement during hookup and lift-off.

Figure 7-6. M192-1 HAWK Zero Length Missile Launcher (USMC)

7-8. M501E3 Guided Missile Loader-Transporter

a. Applicability. The following item, a component of the Hawk missile system, in Table 7-7 is certified for the helicopter(s) listed in the following table by the US Army Soldier Systems Center:

Table 7-7. M501E3 Guided Missile Loader-Transporter

NOMENCLATURE	MAX WEIGHT (POUNDS)	SLING SET	LINK COUNT FRONT/ REAR	TYPE OF AIRCRAFT	RECOMMENDED AIRSPEED (KNOTS)
M501E3 Guided Missile Loader-Transporter	5,300	15K	5/20	CH-53	130

b. Materials. The following materials are required to rig this load:

(1) Sling set (15,000-pound capacity) with one additional web ring .

(2) Tape, adhesive, pressure-sensitive, 2-inch wide roll.

(3) Cord, nylon, Type III, 550-pound breaking strength.

(4) Webbing, cotton, 1/4-inch, 80-pound breaking strength.

c. Personnel. Two persons can prepare and rig this load in 20 minutes.

d. Procedures. The following procedures apply to this load:

(1) Preparation. Prepare the load using the following steps:

(a) With the loader-transporter engine ON, raise the super structure about 3 feet using the EXTENSION lever. Using the ROLL/ELEVATION, AZIMUTH, and EXTENSION levers, position the super structure in the OPERATIONAL READY position. Shut the engine down and place the transmission in neutral.

(b) Secure the super structure arms in the operational position by engaging the lock pins. **THE SUPER STRUCTURE CANNOT BE ALLOWED TO MOVE.**

(c) Secure all doors and vents with tape or Type III nylon cord.

(d) Secure all hoses, cables, and chains to the adjacent structure with tape or Type III nylon cord.

(e) Ensure the fuel tanks are not over 3/4 full. Inspect the fuel tank cap, oil filler cap, and battery caps for proper installation.

(2) Rigging. Rig the load according to the steps in Figure 7-7.

(3) Hookup. Two hookup teams are required for this load. The static wand person discharges the static electricity with the static wand. The forward hookup person stands on the forward end of the vehicle and places apex fitting number 1 onto the forward cargo hook. The aft hookup person stands on the rear of the vehicle and places apex fitting number 2 onto the aft cargo hook. The hookup teams then carefully dismount the loader and remain close to the load as the helicopter removes slack from the sling legs. When successful hookup is assured, the hookup teams quickly exit the area underneath the helicopter to the designated rendezvous point.

(4) Derigging. Derigging is the reverse of the preparation and rigging procedures in steps d (1) and d (2).

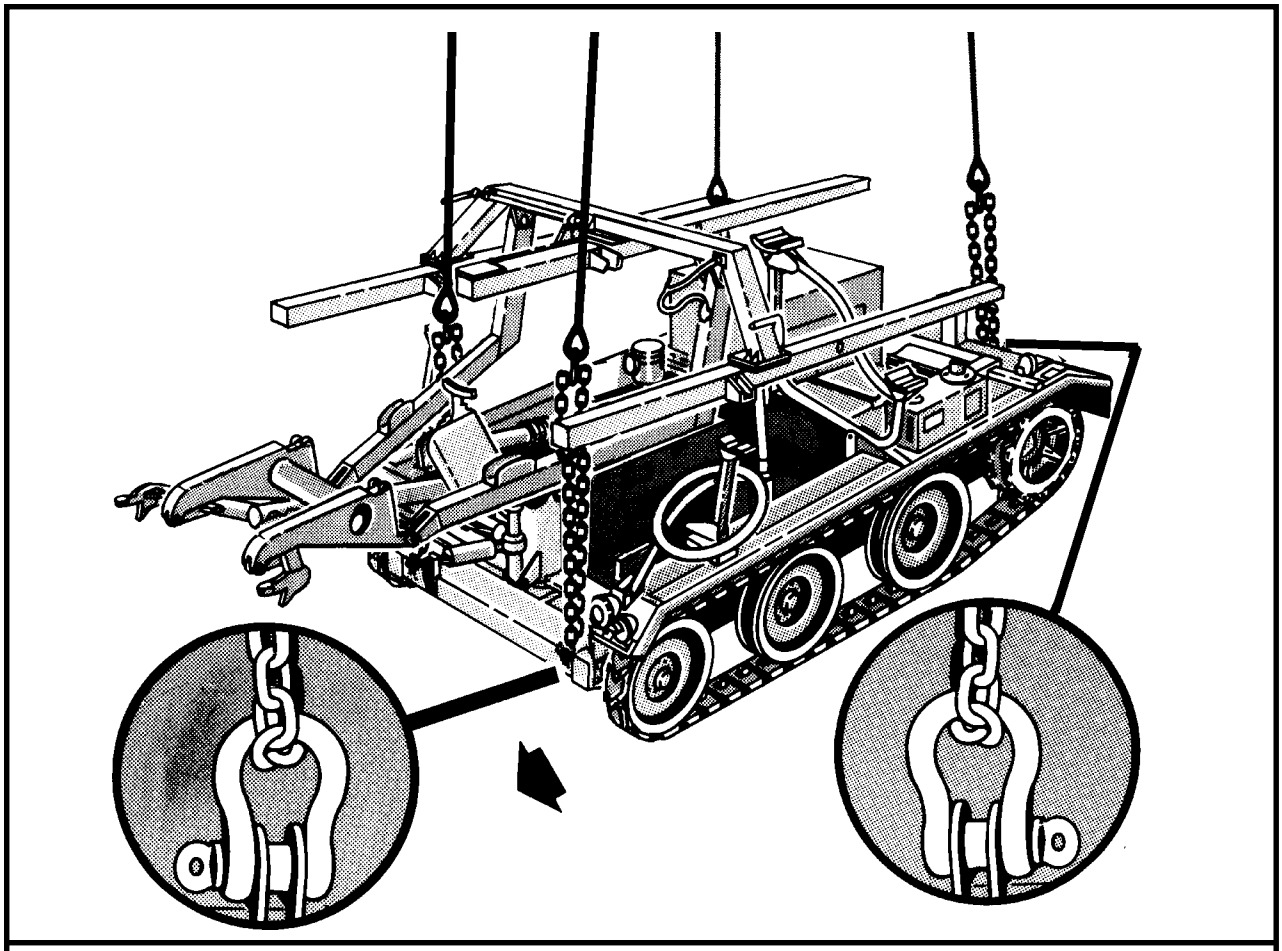

RIGGING STEPS

1. Place two sling legs on web ring/apex fitting number 1. Position web ring/apex fitting number 1 on top of the loader arm on the driver's compartment end of the loader.

2. Route the chain end of the sling legs to the front of the vehicle. Ensure the sling legs are routed inboard of the outer two upper hoisting beams and outboard of the two lower super structure arms. Loop the chain end of the left and right sling legs through their respective lift provision located inboard of the front wheels. Place the correct link from Table 7-7 in the grab hook.

3. Place two sling legs on web ring/apex fitting number 2. Position web ring/apex fitting number 2 on top of the loader arm on the rear (engine compartment) of the loader.

4. Route the chain end of the sling legs to the rear of the vehicle. Ensure the sling legs are routed inboard of the outer two upper hoisting beams. Loop the chain end of the left and right sling legs through their respective lift provision located inboard of the rear fender. Place the correct link from Table 7-7 in the grab hook. Secure the excess chain with tape or Type III nylon cord.

5. Remove the slack from each sling leg and tape or tie (breakaway technique) the grab hooks or sling legs to the hoisting beams.

6. Cluster and tie or tape (breakaway technique) the sling legs in each sling set together to prevent entanglement during hookup and lift-off.

Figure 7-7. M501E3 Guided Missile Loader-Transporter

7-9. XM1E2 Loading and Storage Pallet

a. Applicability. The following items, components of the Hawk missile system, in Table 7-8 are certified for the helicopter(s) listed in the following table by the US Army Soldier Systems Center:

Table 7-8. XM1E2 Loading and Storage Pallet

NOMENCLATURE	MAX WEIGHT (POUNDS)	SLING SET	LINK COUNT FRONT/ REAR	TYPE OF AIRCRAFT	RECOMMENDED AIRSPEED (KNOTS)
XM1E2 Pallet on M390C Trailer with One Missile	6,155	25K	45/30	CH-47	120
XM1E2 Pallet on M390C Trailer with Two Missiles	7,560	25K	45/30	CH-47	110
XM1E2 Pallet on M390C Trailer with Three Missiles	9,005	25K	45/30	CH-47	100

b. Materials. The following materials are required to rig this load:

(1) Sling set (25,000-pound capacity) with one additional apex fitting .

(2) Tape, adhesive, pressure-sensitive, 2-inch wide roll.

(3) Cord, nylon, Type III, 550-pound breaking strength.

(4) Webbing, cotton, 1/4-inch, 80-pound breaking strength.

(5) Clevis assembly, NSN 4030-00-278-0699 (6 each).

(6) Webbing, nylon, tubular, 1,000-pound breaking strength.

(7) Reach pendant (11,000- or 25,0000-pound capacity) (2 each).

CAUTION
DO NOT MIX DIFFERENT CAPACITY REACH PENDANTS. USE TWO 11,000-POUND CAPACITY OR TWO 25,000-POUND CAPACITY REACH PENDANTS.

c. Personnel. Two persons can prepare and rig this load in 20 minutes.

d. Procedures. The following procedures apply to this load:

(1) Preparation. Prepare the load using the following steps:

(a) Prepare the trailer, pallet, and missiles for travel according to instructions in the operator's manual.

(b) Ensure each missile is properly locked into the appropriate rack on the pallet. If one missile is being sling loaded, it must be on the upper center storage rack. If two missiles are being sling loaded, they must be mounted on the outside storage racks.

(c) Ensure the 3 1/4-ton clevises provided with the trailer chassis have been replaced with 6 3/4-ton clevises (NSN 4030-00-278-0699). Ensure the clevises are pinned and not damaged.

(d) Engage the parking brakes.

(e) Adjust the leveling jack pads to just above ground level.

(f) Secure all hoses, cables, and chains to the adjacent structure with tape or Type III nylon cord.

(g) Install a reach pendant on each of the apex fitting.

(2) Rigging. Rig the load according to the steps in Figure 7-8.

(3) Hookup. Two hookup persons are required for this load. The forward hookup person stands on the aft end of the trailer and places reach pendant 1 onto the forward cargo hook. The aft hookup person stands on the lunette end of the trailer and places reach pendant 2 onto the aft cargo hook. The hookup teams then carefully dismount the trailer and remain close to the load as the helicopter removes slack from the sling legs. When successful hookup is assured, the hookup teams quickly exit the area underneath the helicopter to the designated rendezvous point.

NOTE: The helicopter should hover forward of the load when releasing the forward hook and hover to the rear of the load when releasing the aft hook to avoid dropping the reach pendants on the missiles.

(4) Derigging. Derigging is the reverse of the preparation and rigging procedures in steps d (1) and d (2).

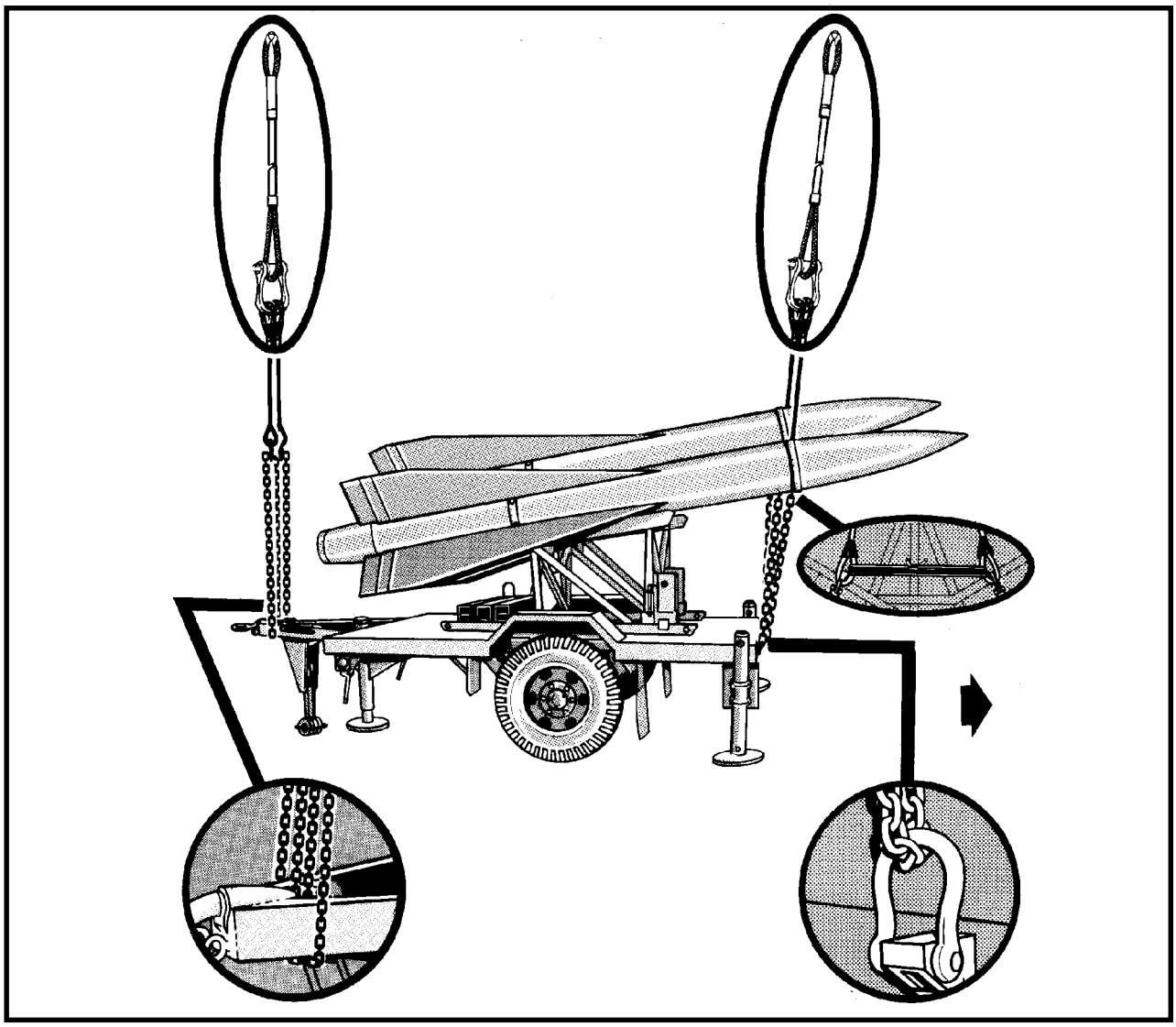

Figure 7-8. XM1E2 Loading and Storage Pallet

RIGGING STEPS

1. Place two sling legs on apex fitting number 1. Position apex fitting and reach pendant number 1 on top of the trailer lunette.

2. Loop the chain end of the left sling leg down through the opening aft of the lunette and forward of the landing wheel. Pull the chain up the outside of the left side of the trailer A-frame. Place the correct link from Table 7-8 in the grab hook. Secure the excess chain with tape or Type III nylon cord.

3. Repeat the above procedures using the right sling leg and pulling the chain up the outside of the right side of the trailer A-frame.

4. Place two sling legs on apex fitting number 2. Position apex fitting and reach pendant number 2 on top of the center missile position.

5. Route the left sling leg between the center missile and the left missile. Loop the chain end of the left sling leg through the lift provision located on the left rear corner of the launcher. Place the correct link from Table 7-8 in the grab hook. Secure the excess chain with tape or Type III nylon cord.

6. Route the right sling leg between the center missile and the right missile. Loop the chain end of the right sling leg through the lift provision located on the right rear corner of the launcher. Place the correct link from Table 7-8 in the grab hook. Secure the excess chain with tape or Type III nylon cord.

7. Use a 16 foot length of 1/2-inch tubular nylon to prevent the rear slings from interfering with the two outer missiles. Route one end through the potted eye of one rear sling leg. Route the same end of the tubular nylon through the potted eye on the other rear sling. Position the potted eyes of the two sling legs 32 inches apart so the sling legs cannot contact the two outer launch missiles or the center missile. Using the remainder of the tubular nylon, repeat the procedure until there are at least five lengths of nylon (2 1/2 complete wraps) between the potted eyes of the two sling legs. Tie the two ends together with a square knot and an overhand knot in each runnig end.

NOTE: Do not route the tubular nylon between the chains or grab hooks. Failure to attach the tubular nylon between the sling leg potted eyes may result in damage to the missiles or failure of the load.

8. Cluster and tie or tape (breakaway technique) the sling legs in each sling set together to prevent entanglement during hookup and lift-off.

Figure 7-8. XM1E2 Loading and Storage Pallet (continued)

7-10. Platoon Support Van/Maintenance Center (PSV/MC)

a. Applicability. The following items, components of the Hawk missile system, in Table 7-9 are certified for the helicopter(s) listed in the following table by the US Army Soldier Systems Center:

Table 7-9. Platoon Support Van/Maintenance Center

NOMENCLATURE	MAX WEIGHT (POUNDS)	SLING SET	LINK COUNT FRONT/ REAR	TYPE OF AIRCRAFT	RECOMMENDED AIRSPEED (KNOTS)
Platoon Support Van/Maintenance Center, M32	14,300	25K	8/46	CH-47	120
Platoon Support Van, M934A1/A2	14,300	25K	77/39	CH-47	120

b. Materials. The following materials are required to rig this load:

(1) Sling set (25,000-pound capacity) with one additional apex fitting.

(2) Tape, adhesive, pressure-sensitive, 2-inch wide roll.

(3) Cord, nylon, Type III, 550-pound breaking strength.

(4) Webbing, cotton, 1/4-inch, 80-pound breaking strength.

c. Personnel. Four persons can prepare and rig this load in 60 minutes.

d. Procedures. The following procedures apply to this load:

(1) Preparation. Prepare the load using the following steps:

(a) Prepare the PSV/MC M32 van for travel according to instructions in the operator's manual.

(b) Secure all loose equipment inside the shelter with tape or Type III nylon cord.

(c) Close and secure all doors and vents. Secure the door in the closed and locked position.

(2) Rigging. Rig the load according to the steps in Figure 7-9.

(3) Hookup. Two hookup teams are required for this load. The static wand person discharges the static electricity with the static wand. The forward hookup person stands on top of the shelter and places apex fitting number 1 onto the forward cargo hook. The aft hookup person stands on top of the shelter and places apex fitting number 2 onto the aft cargo hook. The hookup teams then carefully dismount the shelter and remain close to the load as the helicopter removes slack from the sling legs. When successful hookup is assured, the hookup teams quickly exit the area underneath the helicopter to the designated rendezvous point.

(4) Derigging. Derigging is the reverse of the preparation and rigging procedures in steps d (1) and d (2).

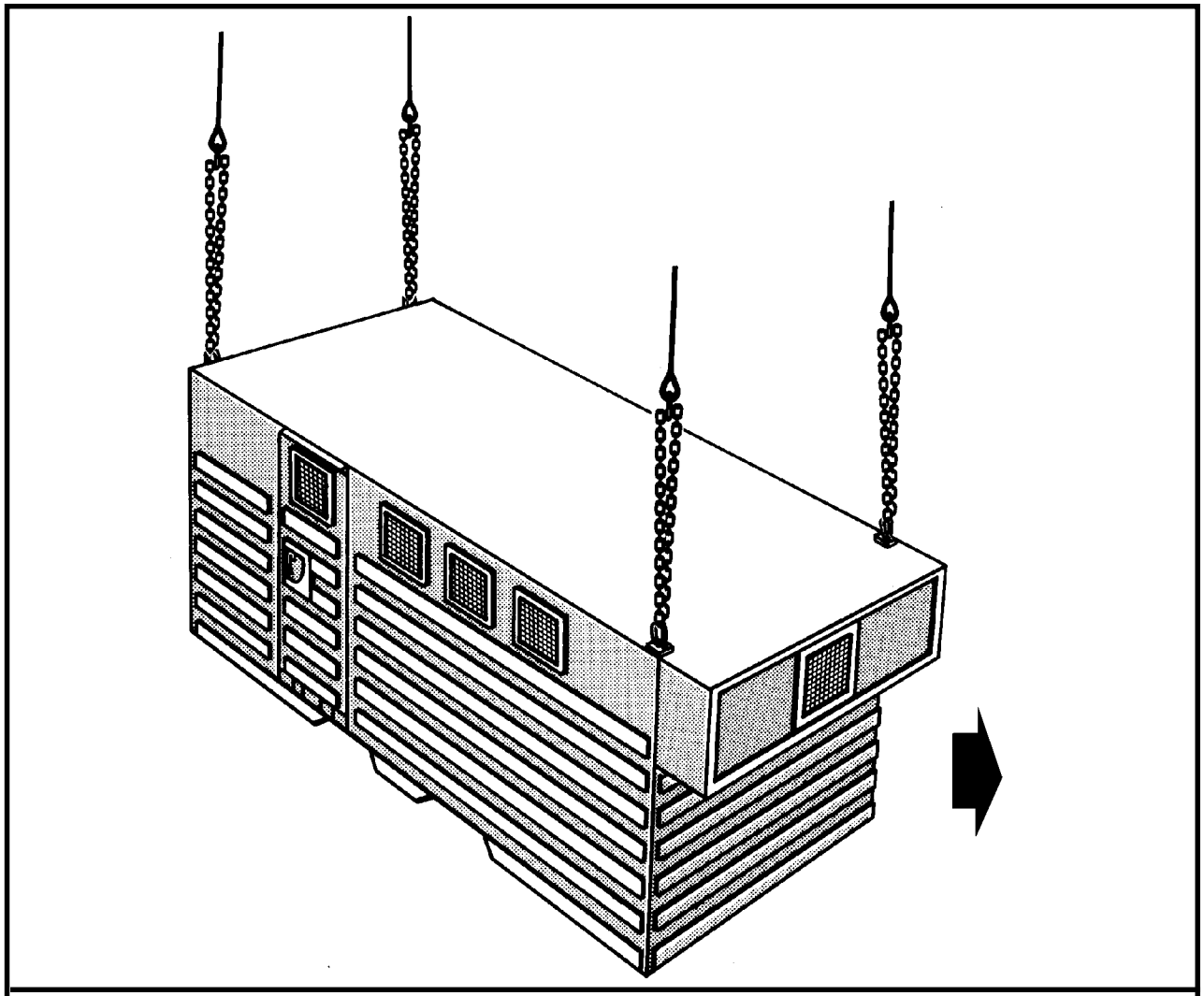

RIGGING STEPS

1. Place two sling legs on apex fitting number 1. Position apex fitting number 1 on top of the environmental control unit (ECU) end of the shelter.

2. Loop the chain end of the left and right sling legs through their respective lift provisions located on the front corners of the shelter. Place the correct link from Table 7-9 in the grab hook.

3. Place two sling legs on apex fitting number 2. Position apex fitting number 2 on top of aft end of the shelter.

4. Loop the chain end of the left and right sling legs through their respective lift provisions located on the rear corners of the shelter. Place the correct link from Table 7-9 in the grab hook. Secure the excess chain with tape or Type III nylon cord.

5. Cluster and tie or tape (breakaway technique) the sling legs in each sling set together to prevent entanglement during hookup and lift-off.

Figure 7-9. Platoon Support Van/Maintenance Center, M32

7-11. Field Maintenance Equipment Shops

a. Applicability. The following items, components of the Hawk missile system, in Table 7-10 are certified for the helicopter(s) listed in the following table by the US Army Soldier Systems Center:

Table 7-10. Field Maintenance Equipment Shops

NOMENCLATURE	MAX WEIGHT (POUNDS)	SLING SET	LINK COUNT FRONT/ REAR	TYPE OF AIRCRAFT	RECOMMENDED AIRSPEED (KNOTS)
Field Maintenance Equipment Shop 20, Electromechanical Shop	5,312	25K	75/75	CH-47	120
Field Maintenance Equipment Shop 23, Maintenance Repair Facility	5,341	25K	75/75	CH-47	120

b. Materials. The following materials are required to rig this load:

(1) Sling set (25,000-pound capacity) with one additional apex fitting.

(2) Tape, adhesive, pressure-sensitive, 2-inch wide roll.

(3) Cord, nylon, Type III, 550-pound breaking strength.

(4) Webbing, cotton, 1/4-inch, 80-pound breaking strength.

c. Personnel. Four persons can prepare and rig this load in 30 minutes.

d. Procedures. The following procedures apply to this load:

(1) Preparation. Prepare the load using the following steps:

(a) Prepare the FME 20 shop shelter for travel according to instructions in the operator's manual.

(b) Secure all loose equipment inside the shelter with tape or Type III nylon cord.

(c) Close and secure all doors and vents. Secure the door in the closed and locked position.

(2) Rigging. Rig the load according to the steps in Figure 7-10.

(3) Hookup. Two hookup teams are required for this load. The static wand person discharges the static electricity with the static wand. The forward hookup person stands on top of the shelter and places apex fitting number 1 onto the forward cargo hook. The aft hookup person stands on top of the shelter (ECU end) and places apex fitting number 2 onto the aft cargo hook. The hookup teams then carefully dismount the shelter and remain close to the load as the helicopter removes slack from the sling legs. When successful hookup is assured, the hookup teams quickly exit the area underneath the helicopter to the designated rendezvous point.

(4) Derigging. Derigging is the reverse of the preparation and rigging procedures in steps d (1) and d (2).

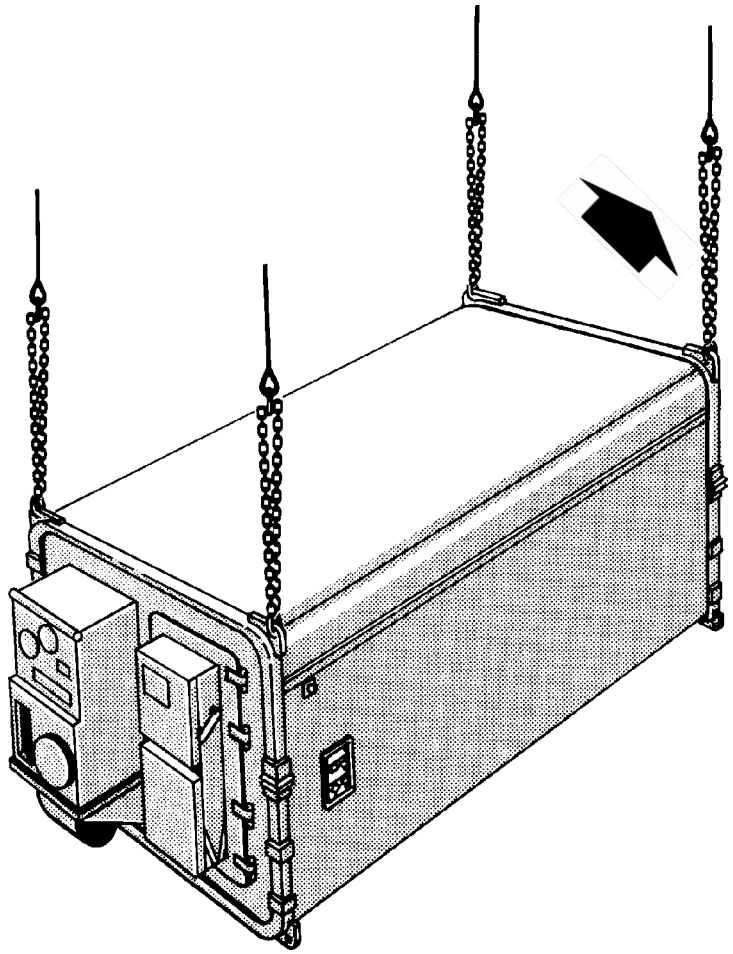

RIGGING STEPS

1. Place two sling legs on apex fitting number 1. Position apex fitting number 1 on top of the shelter, opposite the ECU end.

2. Loop the chain end of the left and right sling legs through their respective lift provisions located on the front corners of the shelter. Place the correct link from Table 7-10 in the grab hook. Secure the excess chain with tape or Type III nylon cord.

3. Place two sling legs on apex fitting number 2. Position apex fitting number 2 on top of the ECU end of the shelter.

4. Loop the chain end of the left and right sling legs through their respective lift provisions located on the rear corners of the shelter. Place the correct link from Table 7-10 in the grab hook. Secure the excess chain with tape or Type III nylon cord.

5. Cluster and tie or tape (breakaway technique) the sling legs in each sling set together to prevent entanglement during hookup and lift-off.

Figure 7-10. Field Maintenance Equipment Shop 20, Electromechanical Shop

7-12. Field Maintenance Equipment Shop 21, Unmanned Shop, Electrical Equipment

a. Applicability. The following item, a component of the Hawk missile system, in Table 7-11 is certified for the helicopter(s) listed in the following table by the US Army Soldier Systems Center:

Table 7-11. Field Maintenance Equipment Shop 21, Unmanned Shop, Electrical Equipment

NOMENCLATURE	MAX WEIGHT (POUNDS)	SLING SET	LINK COUNT FRONT/ REAR	TYPE OF AIRCRAFT	RECOMMENDED AIRSPEED (KNOTS)
Field Maintenance Equipment Shop 21, Unmanned Shop, Electrical Equipment	5,639	25K	5/28	CH-47	120

b. Materials. The following materials are required to rig this load:

(1) Sling set (25,000-pound capacity) with one additional apex fitting.

(2) Tape, adhesive, pressure-sensitive, 2-inch wide roll.

(3) Cord, nylon, Type III, 550-pound breaking strength.

(4) Webbing, cotton, 1/4-inch, 80-pound breaking strength.

c. Personnel. Four persons can prepare and rig this load in 30 minutes.

d. Procedures. The following procedures apply to this load:

(1) Preparation. Prepare the load using the following steps:

(a) Prepare the FME 21 shop shelter for travel according to instructions in the operator's manual.

(b) Secure all loose equipment inside the shelter with tape or Type III nylon cord.

(c) Close and secure all doors and vents. Secure the door in the closed and locked position.

(2) Rigging. Rig the load according to the steps in Figure 7-11.

(3) Hookup. Two hookup teams are required for this load. The static wand person discharges the static electricity with the static wand. The forward hookup person stands on top of the shelter and places apex fitting number 1 onto the forward cargo hook. The aft hookup person stands on top of the shelter (door end) and places apex fitting number 2 onto the aft cargo hook. The hookup teams then carefully dismount the shelter and remain close to the load as the helicopter removes slack from the sling legs. When successful hookup is assured, the hookup teams quickly exit the area underneath the helicopter to the designated rendezvous point.

(4) Derigging. Derigging is the reverse of the preparation and rigging procedures in steps d (1) and d (2).

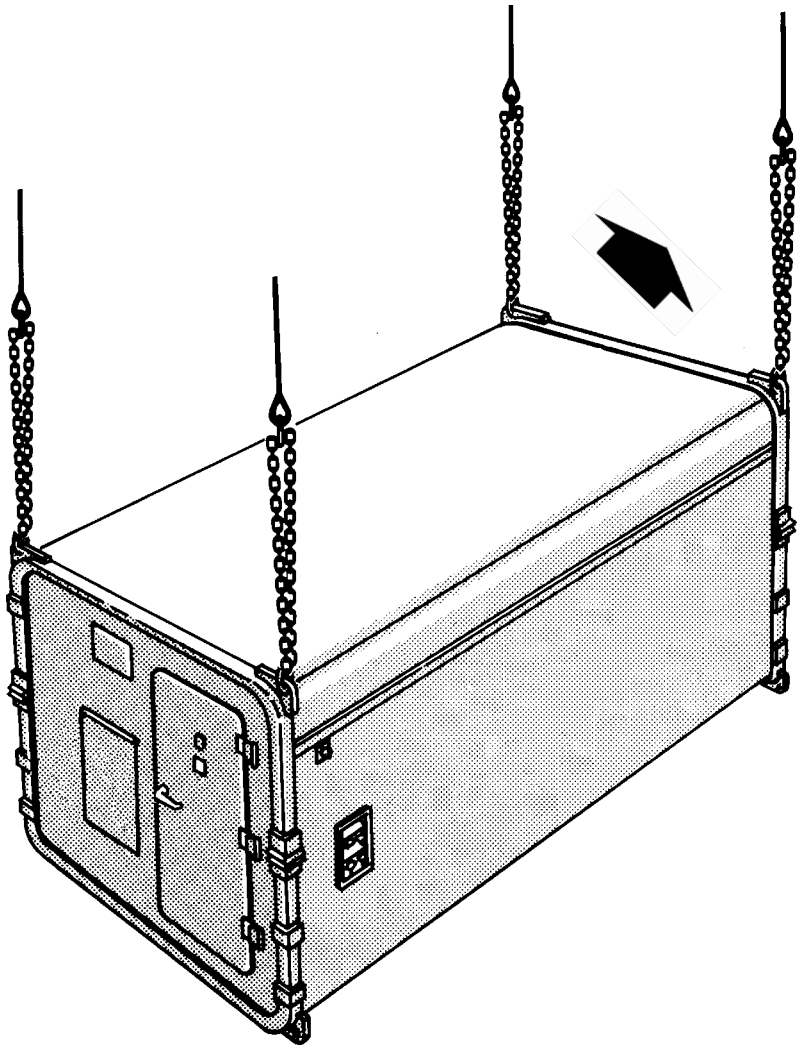

RIGGING STEPS

1. Place two sling legs on apex fitting number 1. Position apex fitting number 1 on top of the shelter, opposite the door end.

2. Loop the chain end of the left and right sling legs through their respective lift provisions located on the front corners of the shelter. Place the correct link from Table 7-11 in the grab hook.

3. Place two sling legs on apex fitting number 2. Position apex fitting number 2 on top of the door end of the shelter.

4. Loop the chain end of the left and right sling legs through their respective lift provisions located on the rear corners of the shelter. Place the correct link from Table 7-11 in the grab hook. Secure the excess chain with tape or Type III nylon cord.

5. Cluster and tie or tape (breakaway technique) the sling legs in each sling set together to prevent entanglement during hookup and lift-off.

Figure 7-11. Field Maintenance Equipment Shop 21, Unmanned Shop, Electrical Equipment

7-13. Platoon Command Post (PCP) / Battery Command Post (BCP)

a. Applicability. The following items, components of the Hawk missile system, in Table 7-12 are certified for the helicopter(s) listed in the following table by the US Army Soldier Systems Center:

Table 7-12. Platoon Command Post/Battery Command Post

NOMENCLATURE	MAX WEIGHT (POUNDS)	SLING SET	LINK COUNT FRONT/ REAR	TYPE OF AIRCRAFT	RECOMMENDED AIRSPEED (KNOTS)
Platoon Command Post, AN/MSW-20, Phase II, on M390C Trailer	10,244	25K	3/70	CH-47	125
Platoon Command Post, AN/MSW-20, Phase III, on M390C Trailer	9,300	25K	3/70	CH-47	125
Battery Command Post, AN/MSW-21, Phase III, on M390C Trailer	9,980	25K	3/70	CH-47	125

b. Materials. The following materials are required to rig this load:

(1) Sling set (25,000-pound capacity) with one additional apex fitting .

(a) Chain length, part number 38850-00053-102, from a 25,000-pound capacity sling set (2 each).

(b) Coupling link, part number 664-241, from a 25,000-pound capacity sling set (2 each).

(2) Line, multiloop, 4-loop, 8-ply, NSN 1670-01-062-6307 (2 each).

(3) Tape, adhesive, pressure-sensitive, 2-inch wide roll.

(4) Cord, nylon, Type III, 550-pound breaking strength.

(5) Webbing, cotton, 1/4-inch, 80-pound breaking strength.

(6) Clevis assembly, NSN 4030-00-278-0699 (6 each).

(7) Webbing, nylon, tubular, 1,000-pound breaking strength.

CAUTION
DO NOT SUBSTITUTE ANY SLING EQUIPMENT IN PLACE OF THE SPECIFIED SLING SET OR MULTILOOP LINES. THE TWO MULTILOOP LINES AND THE SLING SET, WITH THE ADDITIONAL APEX FITTING, CHAIN LENGTHS, AND ADDITIONAL COUPLING LINKS, ARE TO BE STORED IN THE KIT BAG AND ONLY USED FOR SLING LOADING THE PCP/BCP.

c. Personnel. Two persons can prepare and rig this load in 30 minutes.

d. Procedures. The following procedures apply to this load:

(1) Preparation. Prepare the load using the following steps:

(a) Prepare the PCP/BCP for travel according to instructions in the operator's manual.

(b) Ensure the 3 1/4-ton clevises provided with the trailer chassis have been replaced with 6 3/4-ton clevises (NSN 4030-00-278-0699). Ensure the clevises are pinned and not damaged.

(c) Engage the parking brakes.

(d) Adjust the leveling jack pads to just above ground level. Lock into position.

(e) Secure all hoses, cables, and chains to the adjacent structure with tape or Type III nylon cord.

(f) Tape the towing provisions on the bottom corners of the shelter to prevent the rigging crew from routing the sling leg chain ends through the towing provisions.

(g) Using 1/2-inch tubular nylon, tie the front and rear lifting rings together tightly on top of the left side of the shelter so the lifting rings are facing each other. Repeat the procedure with the top lifting rings on the right side of the shelter.

(2) Rigging. Rig the load according to the steps in Figure 7-12.

(3) Hookup. Two hookup teams are required for this load. The static wand person discharges the static electricity with the static wand. The forward hookup person stands on top of the shelter and places apex fitting number 1 onto the forward cargo hook. The aft hookup person stands on top of the shelter and places apex fitting number 2 onto the aft cargo hook. The hookup teams then carefully dismount the shelter and remain close to the load as the helicopter removes slack from the sling legs. When successful hookup is assured, the hookup teams quickly exit the area underneath the helicopter to the designated rendezvous point.

(4) Derigging. Derigging is the reverse of the preparation and rigging procedures in steps d (1) and d (2).

NOTE: Do not remove the additional chain sections from sling set 1. Keep sling sets 1 and 2 intact for ease in future use. Store the 12-foot multiloop lines in the kit bag with the two sling sets.

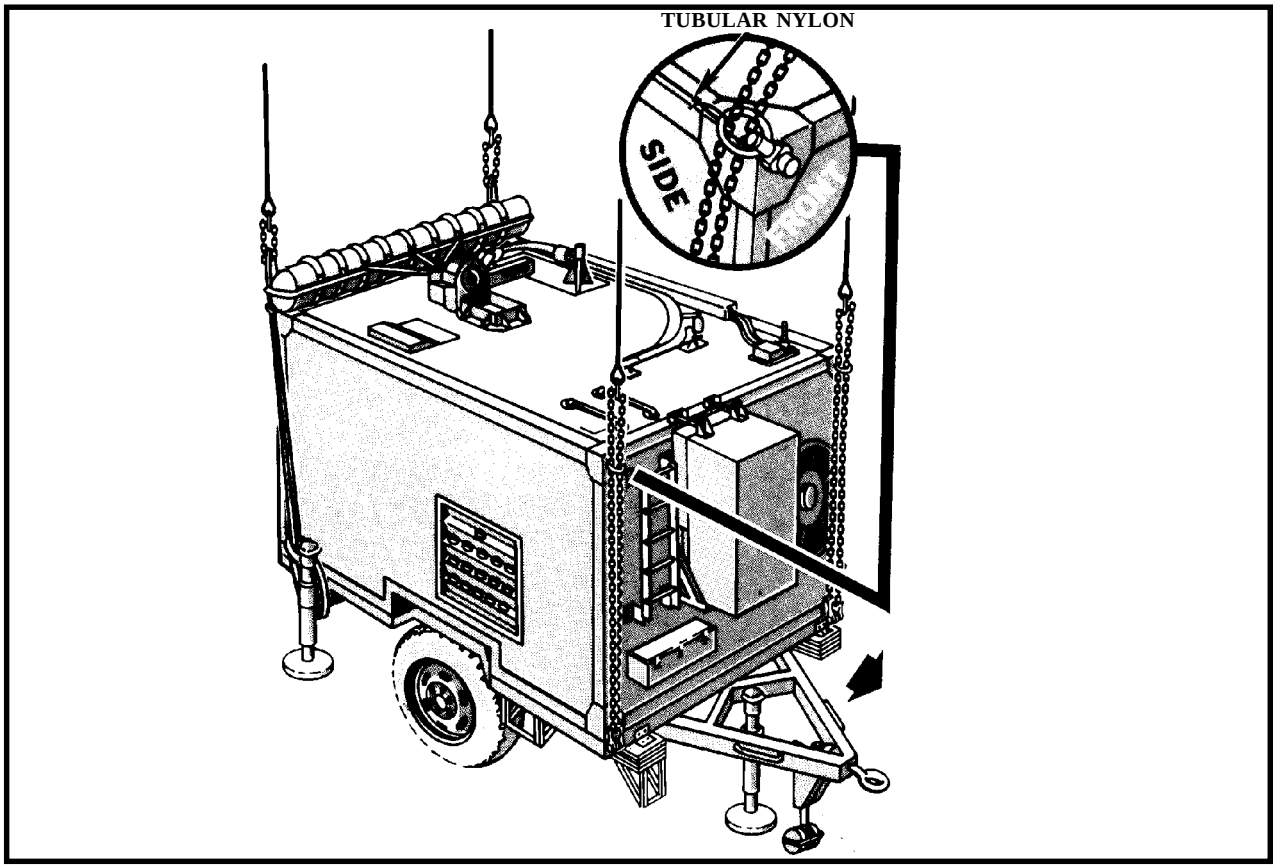

Figure 7-12. Platoon Command Post/Battery Command Post

RIGGING STEPS

1. Place two sling legs on apex fitting number 1. Connect an additional chain length to each sling leg chain using the coupling links. Position apex fitting number 1 on top of the shelter on the lunette end.

2. Route the chain end of the left sling leg down through the upper lifting ring on the top left corner of the shelter, through the trailer lifting provision located on the front left corner of the trailer chassis, and back up through the upper lifting ring on the top left corner of the shelter. Place the correct link from Table 7-12 in the grab hook.

3. Repeat the above procedures using the right sling leg and the right lifting provision.

NOTE: Do not route the chain ends through the towing provision on the base of the shelter.

4. Choker hitch a 12-foot line around the rear left leveling jack stand on the trailer chassis. Ensure the loop of the knot is facing to the rear of the trailer. Route the free end of the 12-foot multiloop line up through the lifting ring on the top corner of the shelter. Ensure the choker hitch is tight around the jack stand and the individual plies of the multiloop line remain aligned. Tape or tie the multiloop line as necessary.

NOTE: Do not route the 12-foot multiloop line through the towing provision on the base of the shelter.

5. Repeat the above procedures on the right side of the shelter using the remaining 12-foot multiloop line.

6. Place two sling legs on apex fitting number 2. Position apex fitting number 2 on top of the IFF end of the shelter.

7. Loop the chain end of the left sling leg through the open loop at the free end of the 12-foot multiloop line on the left rear corner of the shelter. Place the correct link from Table 7-12 in the grab hook. Secure the excess chain with tape or Type III nylon cord.

8. Repeat the above procedure using the right multiloop line and the right sling leg.

9. Cluster and tie or tape (breakaway technique) the sling legs in each sling set together to prevent entanglement during hookup and lift-off.

Figure 7-12. Platoon Command Post/Battery Command Post (continued)

7-14. Stinger, Pedestal-Mounted on M1097/M1097A1/M1097A2 HMMWV(Avenger) with ECUand PPU with or without Bustle Box Stowed on Roof

a. Applicability. The following item in Table 7-13 is certified for the helicopter(s) listed in the following table by the US Army Soldier Systems Center:

Table 7-13. Avenger with ECU and PPU on M1097/M1097A1/M1097A2 HMMWV

NOMENCLATURE	MAX WEIGHT (POUNDS)	SLING SET	LINK COUNT FRONT/ REAR	TYPE OF AIRCRAFT	RECOMMENDED AIRSPEED (KNOTS)
Stinger, Pedestal-Mounted with ECU and PPU on M1097, (Avenger)	9,800	10K 25K	50/3 40/5	CH-47	90
Stinger, Pedestal-Mounted with ECU and PPU on M1097A1, (Avenger)	9,800	10K 25K	50/3 40/5	CH-47	90
Stinger, Pedestal-Mounted with ECU and PPU on M1097A2, (Avenger)	10,300	25K	40/5	CH-47	90

b. Materials. The following materials are required to rig this load:

(1) Sling set (25,000-pound capacity) with one additional apex.

(a) Chain length, part number 38850-00053-102, from a 25,000-pound capacity sling set (4 each).

(b) Coupling link, part number 664241, from a 25,000-pound capacity sling set (4 each).

OR

(2) Sling set (10,000-pound capacity) with one additional apex.

(a) Chain length, part number 38850-00053-101, from a 10,000-pound capacity sling set (4 each).

(b) Coupling link, part number 557-0615, from a 10,000-pound capacity sling set (4 each).

(3) Tape, adhesive, pressure-sensitive, 2-inch wide roll.

(4) Cord, nylon, Type III, 550-pound breaking strength.

(5) Webbing, cotton, 1/4-inch, 80-pound breaking strength.

c. Personnel. Two persons can prepare and rig this load in 15 minutes.

d. Procedures. The following procedures apply to this load:

(1) Preparation. Prepare the load using the following steps:

(a) Fold the mirrors inward and secure with Type III nylon cord.

(b) Ensure the Avenger fire unit is secured to the truck. Secure all equipment inside the fire unit with tape, lashings , or Type III nylon cord. Close and secure the door.

(c) Disconnect the standard vehicle-mounted launcher connectors from the missile pods and secure them to the fire unit with tape or Type III nylon cord.

(d) Secure all equipment inside the vehicle with tape or Type III nylon cord. Secure the doors shut (if installed).

(e) Ensure the fuel tank is not over 3/4 full. Inspect the fuel tank cap, oil filler cap, and battery caps for proper installation.

(f) Secure the bustle box to the box rack on the roof of the vehicle using the tiedown straps (if needed).

Note: The bustle box can only be carried if the roof rack is installed on the roof.

(g) Engage the vehicle parking brake and place the transmission in neutral.

(h) Ensure the front wheels are pointed straight ahead. Tie down the steering wheel using the securing device attached under the dashboard or Type III nylon cord.

(2) Rigging. Rig the load according to the steps in Figure 7-13.

(3) Hookup. Two hookup teams are required for this load. The hookup teams stand on top of the firing unit. The static wand person discharges the static electricity with the static wand. The forward hookup person places apex fitting 1 onto the forward cargo hook. The aft hookup person places apex fitting 2 onto the aft cargo hook. The hookup teams then carefully dismount the vehicle and remain close to the load as the helicopter removes slack from the sling legs. When successful hookup is assured, the hookup teams quickly exit the area underneath the helicopter to the designated rendezvous point.

(4) Derigging. Derigging is the reverse of the preparation and rigging procedures in steps d (1) and d (2).

CAUTION
DO NOT PLACE THE SLING LEGS IN THE SLING LEG GUIDES LOCATED ON TOP OF THE FIRING UNIT

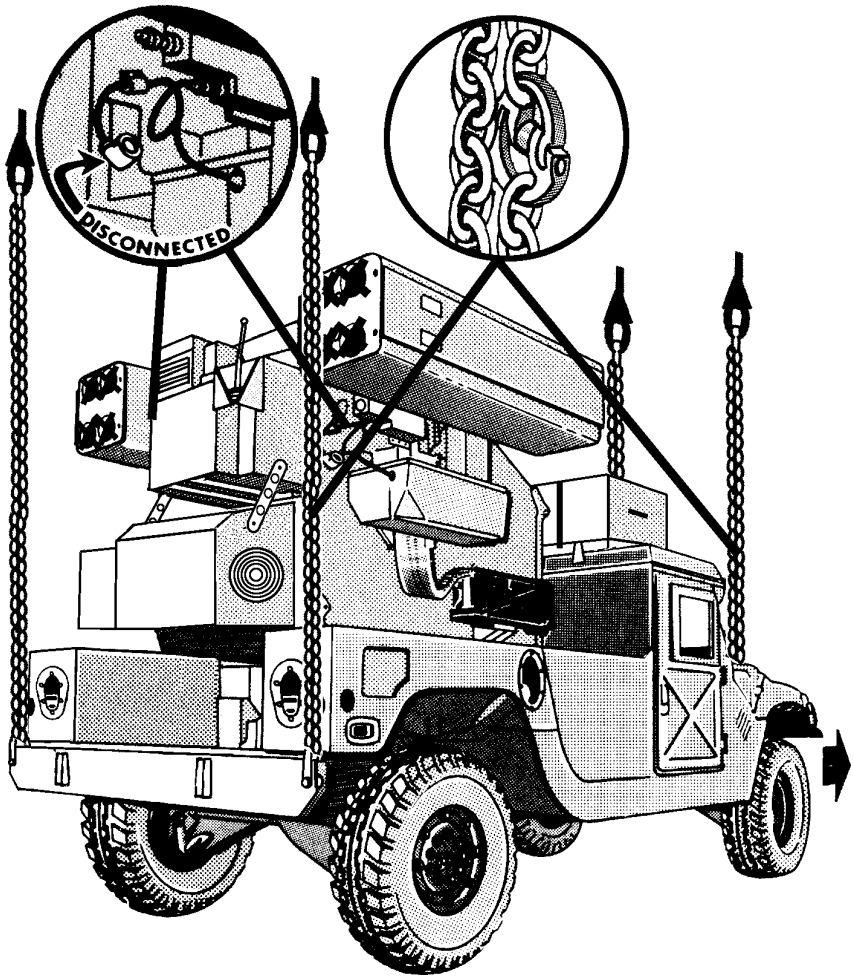

Figure 7-13. Pedestal-Mounted Stinger on M1097/M1097A1/M1097A2 HMMWV (Avenger) with ECUand PPU

RIGGING STEPS

1. Place two sling legs on apex fitting number 1. Attach an additional chain length to each chain using coupling links. Position apex fitting number 1 on top of the vehicle roof or bustle box (if used).

2. Loop the chain end of the left and right sling legs through their respective lift provisions that protrude through the hood of the vehicle. Place the correct link from Table 7-13 in the grab hook. Secure excess chain with tape or Type III nylon cord.

3. Place two sling legs on apex fitting number 2. Attach an additional chain length to each chain using coupling links. Position apex fitting number 2 on top of the firing unit.

4. Loop the chain end of the left and right sling legs through their respective lift provisions located on outside end of the rear bumper. Place the correct link from Table 7-13 in the grab hook.

CAUTION
DO NOT PLACE THE SLING LEGS IN THE SLING LEG GUIDES LOCATED ON TOP OF THE FIRING UNIT.

5. Cluster and tie or tape (breakaway technique) the sling legs in each sling set together to prevent entanglement during hookup and lift-off.

Figure 7-13. Pedestal-Mounted Stinger on M1097A2 HMMWV (Avenger) with ECUand PPU (continued)

CAUTION
DO NOT USE THE LIFT SHACKLES LOCATED NEAR THE CENTER OF THE REAR BUMPER FOR SLING LOAD LIFT PROVISIONS.

CHAPTER 8

CERTIFIED DUAL-POINT RIGGING PROCEDURES FOR ENGINEER EQUIPMENT

8-1. INTRODUCTION

This chapter contains rigging procedures for dual-point lift of engineer equipment loads that have been certified for sling load. Each rigging procedure is found in a paragraph that includes a description of the load, materials required for rigging, and steps to complete the procedure. An applicability paragraph is also a part of each paragraph and identifies the certified loads. The certified dual-point rigging procedures for engineer equipment loads are in this section. Paragraphs 8-2 through 8-36 give detailed instructions for rigging loads.

NOTE: Reach Pendants may be used on dual point loads. Place a Reach Pendant on each apex fitting. A static discharge person is not required when using a Reach Pendant.

8-2. D5B Tractor Dozer, Sectionalized

a. Applicability. The following items in Table 8-1 are certified for the helicopter(s) listed in the following table by the US Army Soldier Systems Center:

Table 8-1. D5B Tractor Dozer, Sectionalized

NOMENCLATURE	MAX WEIGHT (POUNDS)	SLING SET	LINK COUNT FRONT/ REAR	TYPE OF AIRCRAFT	RECOMMENDED AIRSPEED (KNOTS)
Tractor, Dozer, D5B, Power Section	18,915	25K	8/57	CH-47	100
Tractor, Dozer, D5B, Track Section	13,735	25K	12/21	CH-47	110

b. Materials. The following materials are required to rig this load:

(1) Sling set (25,000-pound capacity) (2 each) with two additional apex fittings.

(2) Tape, adhesive, pressure-sensitive, 2-inch wide roll.

(3) Cord, nylon, Type III, 550-pound breaking strength.

(4) Webbing, cotton, 1/4-inch, 80-pound breaking strength.

c. Personnel. Four persons can sectionalize this load in 2 1/2 hours and rig each section in 15 minutes.

d. Procedures. The following procedures apply to this load:

(1) Preparation. Prepare the load using the following steps:

(a) Sectionalize the dozer according to the operator's manual. Do not remove the winch and winch pump.

(b) Remove the exhaust stack and secure it on top of the winch with Type III nylon cord.

(c) Remove the pre-air cleaner and secure it on the seat with Type III nylon cord.

(d) Tape all lights and gages.

(e) Secure the seat with Type III nylon cord.

(f) Ensure the fuel tank is not over 3/4 full. Inspect fuel tank cap, oil filler cap, and battery caps for

proper installation.

(2) Rigging. Rig the load according to the steps in Figure 8-1.

NOTE: Hookup of this load presents substantial risk of damage to the load or injury to the hookup personnel. Use of a reach pendant is recommended for this load.

(3) Hookup. Two hookup teams are required for this load. The power section hookup team stands on the top of the power section. The static wand person discharges the static electricity with the static wand. The forward hookup person stands on the driver's seat and places apex fitting 1 onto the forward cargo hook. The aft hookup person stands on the engine compartment and places apex fitting 2 onto the aft cargo hook. The track section hookup team stands on top of the track section. The static wand person discharges the static electricity with the static wand. The forward hookup person places apex fitting 1 onto the forward cargo hook. The aft hookup person places apex fitting 2 onto the aft cargo hook. The hookup teams then carefully dismount the sections and remain close to the load as the helicopter removes slack from the sling legs. When successful hookup is assured, the hookup teams quickly exit the area underneath the helicopter to the designated rendezvous point.

(4) Derigging. Derigging is the reverse of the preparation and rigging procedures in steps d (1) and d (2).

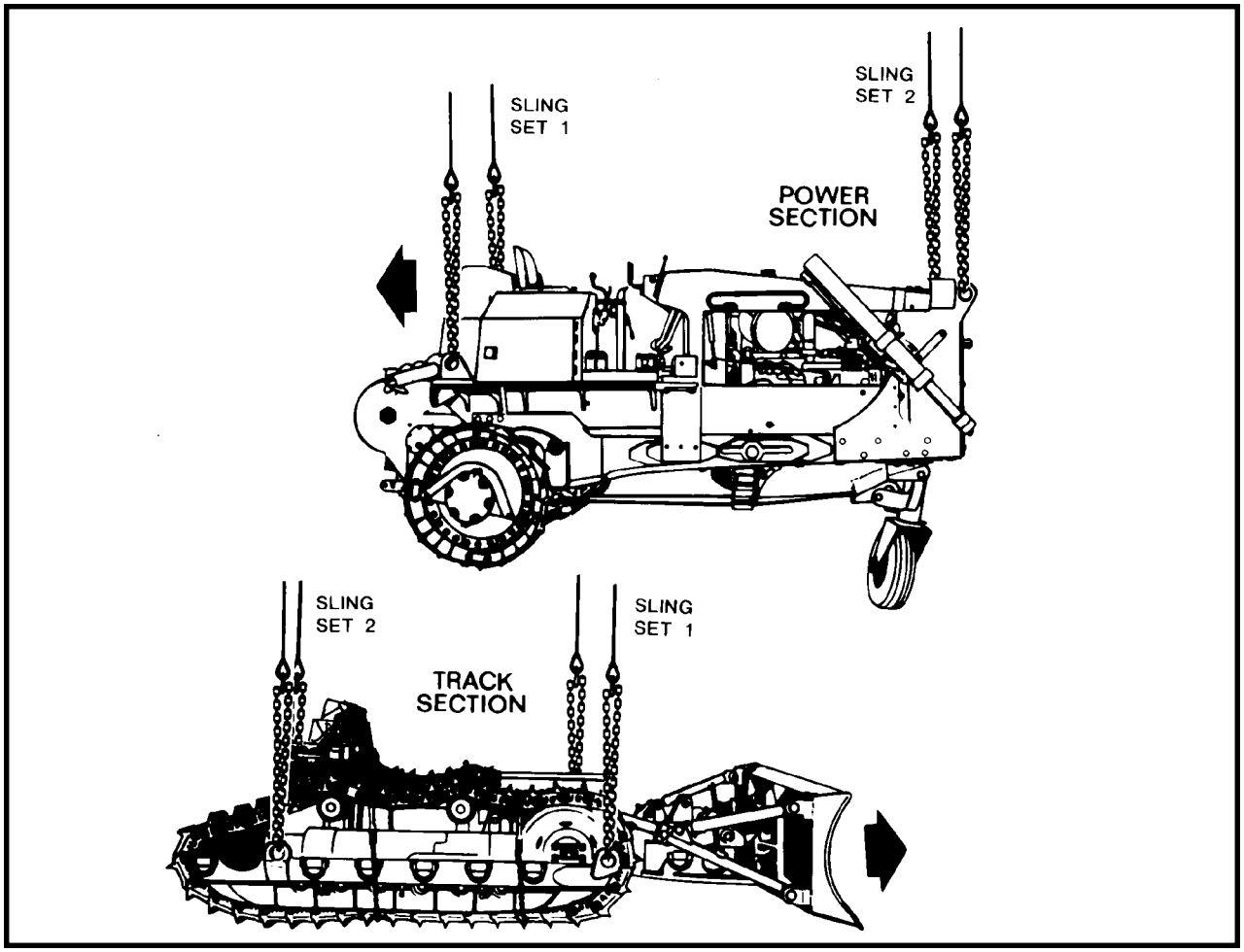

Figure 8-1. D5B Tractor Dozer, Sectionalized

RIGGING STEPS POWER SECTION	RIGGING STEPS TRACK SECTION
1. Place two sling legs on apex fitting number 1. Position apex fitting number 1 on top of the fuel tank. **2.** Loop the chain end of the left and right sling legs through their respective lift provisions located on each side of the fuel tank. Place the correct link from Table 8-1 in the grab hook. **3.** Place two sling legs on apex fitting number 2. Position apex fitting number 2 on top of the engine compartment. **4.** Loop the chain end of the left and right sling legs through their respective lift provisions located on the front corners. Place the correct link from Table 8-1 in the grab hook. Secure excess chain with tape or Type III nylon cord. **5.** Cluster and tie or tape (breakaway technique) the sling legs in each sling set together to prevent entanglement during hookup and lift-off.	**1.** Place two sling legs on apex fitting number 1. Position apex fitting number 1 on top of the forward (blade) end. **2.** Loop the chain end of the left and right sling legs through their respective lift provisions located in front of the forward wheels. Place the correct link from Table 8-1 in the grab hook. Secure excess chain with tape or Type III nylon cord. **3.** Place two sling legs on apex fitting number 2. Position apex fitting number 2 on top of the rear end of the track section. **4.** Loop the chain end of the left and right sling legs through their respective lift provisions located near the aft end of the track. Place the correct link from Table 8-1 in the grab hook. Secure excess chain with tape or Type III nylon cord. **5.** Cluster and tie or tape (breakaway technique) the sling legs in each sling set together to prevent entanglement during hookup and lift-off.

Figure 8-1. D5B Tractor Dozer, Sectionalized (continued)

8-3. Tractor, Full-Tracked, Case Model 1150

a. Applicability. The following item in Table 8-2 is certified for the helicopter(s) listed in the following table by the US Army Soldier Systems Center:

Table 8-2. Tractor, Full-Tracked, Case Model 1150

NOMENCLATURE	MAX WEIGHT (POUNDS)	SLING SET	LINK COUNT FRONT/ REAR	TYPE OF AIRCRAFT	RECOMMENDED AIRSPEED (KNOTS)
Tractor, Full-Tracked, with Bucket, Case Model 1150	27,000	40K	8/16	CH-53	110

b. Materials. The following materials are required to rig this load:

(1) Sling set (40,000-pound capacity) with one additional apex fitting .

(a) Chain length, part number 607050, from a 40,000-pound capacity sling set (4 each).

(b) Coupling link, part number 577-0815, from a 40,000-pound sling set (4 each).

(2) Tape, adhesive, pressure-sensitive, 2-inch wide roll.

(3) Cord, nylon, Type III, 550-pound breaking strength.

(4) Webbing, cotton, 1/4-inch, 80-pound breaking strength.

(5) Felt sheet, cattle hair, Type IV, 1/2-inch or suitable padding.

c. Personnel. Two persons can prepare and rig this load in 30 minutes.

d. Procedures. The following procedures apply to this load:

(1) Preparation. Prepare the load using the following steps:

(a) Raise the bucket 2 to 3 feet off the ground.

(b) Tape the air filter intake, the exhaust pipe opening, and all lights.

(c) Ensure the winch line is completely reeled in.

(d) Engage the hand brake and place the transmission in neutral.

(e) Ensure the fuel tank is not over 3/4 full. Inspect fuel tank cap, oil filler cap, and battery caps for proper installation.

(2) Rigging. Rig the load according to the steps in Figure 8-2.

(3) Hookup. Two hookup teams are required for this load. The static discharge person discharges the static electricity. The forward hookup person stands on the engine deck and places apex fitting 1 onto the forward cargo hook. The aft hookup person stands on the Roll Over Protection System (ROPS) and places apex fitting 2 onto the aft cargo hook. The hookup teams then carefully dismount the tractor and remain close to the load as the helicopter removes slack from the sling legs. When successful hookup is assured, the hookup teams quickly exit the area underneath the helicopter to the designated rendezvous point.

(4) Derigging. Derigging is the reverse of the preparation and rigging procedures in steps d (1) and d (2).

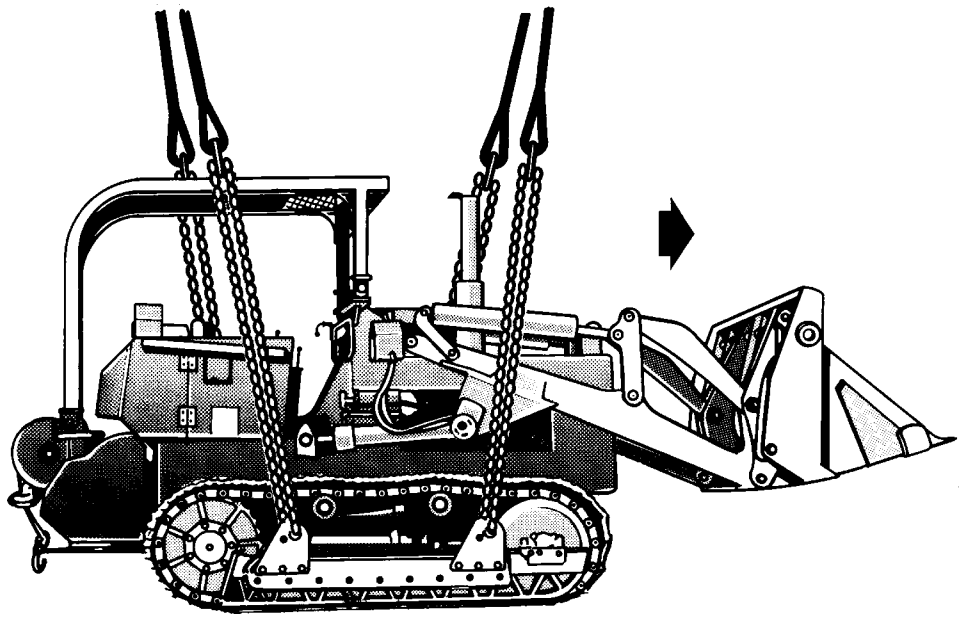

RIGGING STEPS

NOTE: The additional chain section is added after each sling leg chain is looped through the lift provision because the coupling link will not fit through the opening in the lift provision.

1. Place two sling legs on apex fitting number 1. Position apex fitting number 1 on top of the engine compartment .

2. Loop the chain end of the left and right sling legs through their respective lift provisions located aft of the front idler. Using the coupling link, add the chain length to the sling leg chain. Place the correct link from Table 8-2 in the grab hook.

3. Place two sling legs on apex fitting number 2. Position apex fitting number 2 on top of the ROPS.

4. Loop the chain end of the left and right sling legs through their respective lift provisions located forward of the aft drive sprockets. Using the coupling link, add the chain length to the sling leg chain. Place the correct link from Table 8-2 in the grab hook. Secure the excess chain with tape or Type III nylon cord.

5. Pad the chains where they contact the load.

6. Cluster and tie or tape (breakaway technique) the sling legs in each sling set together to prevent entanglement during hookup and lift-off.

Figure 8-2. Tractor, Full-Tracked, Case Model 1150

8-4. Tractor, Full-Tracked, Case Model 1150E

a. Applicability. The following item in Table 8-3 is certified for the helicopter(s) listed in the following table by the US Army Soldier Systems Center:

Table 8-3. Tractor, Full-Tracked, Case Model 1150E

NOMENCLATURE	MAX WEIGHT (POUNDS)	SLING SET	LINK COUNT FRONT/ REAR	TYPE OF AIRCRAFT	RECOMMENDED AIRSPEED (KNOTS)
Tractor, Full-Tracked, Case Model 1150E	24,062	40K	5/50	CH-53	75

b. Materials. The following materials are required to rig this load:

(1) Sling set (40,000-pound capacity) with one additional apex fitting .

(a) Chain length, part number 607050, from a 40,000-pound capacity sling set (2 each).

(b) Coupling link, part number 577-0815, from a 40,000-pound sling set (2 each).

(2) Tape, adhesive, pressure-sensitive, 2-inch wide roll.

(3) Cord, nylon, Type III, 550-pound breaking strength.

(4) Webbing, cotton, 1/4-inch, 80-pound breaking strength.

(5) Felt sheet, cattle hair, Type IV, 1/2-inch or suitable padding.

(6) Tiedown assembly, chain, MB-1 (10,000-pound capacity).

c. Personnel. Two persons can prepare and rig this load in 30 minutes.

d. Procedures. The following procedures apply to this load:

(1) Preparation. Prepare the load using the following steps:

(a) Raise the bucket 2 to 3 feet off the ground. Secure the blade in the UP position with the MB-1 tiedown chain.

(b) Twist the lights inward. Tape the exhaust pipe opening, lights, and all glass.

(c) Ensure the winch line is completely reeled in.

(d) Engage the hand brake and place the transmission in neutral.

(e) Secure all lids, caps, and doors with tape or Type III nylon cord.

(f) Ensure the fuel tank is not over 3/4 full. Inspect fuel tank cap, oil filler cap, and battery caps for proper installation.

(2) Rigging. Rig the load according to the steps in Figure 8-3.

(3) Hookup. Two hookup teams are required for this load. The static discharge person discharges the static electricity. The forward hookup person stands on the engine deck and places apex fitting 1 onto the forward cargo hook. The aft hookup person stands on the rear of the deck or on top of the cab and places apex fitting 2 onto the aft cargo hook. The hookup teams then carefully dismount the tractor and remain close to the load as the helicopter removes slack from the sling legs. When successful hookup is assured, the hookup teams quickly exit the area underneath the helicopter to the designated rendezvous point.

(4) Derigging. Derigging is the reverse of the preparation and rigging procedures in steps d (1) and d (2).

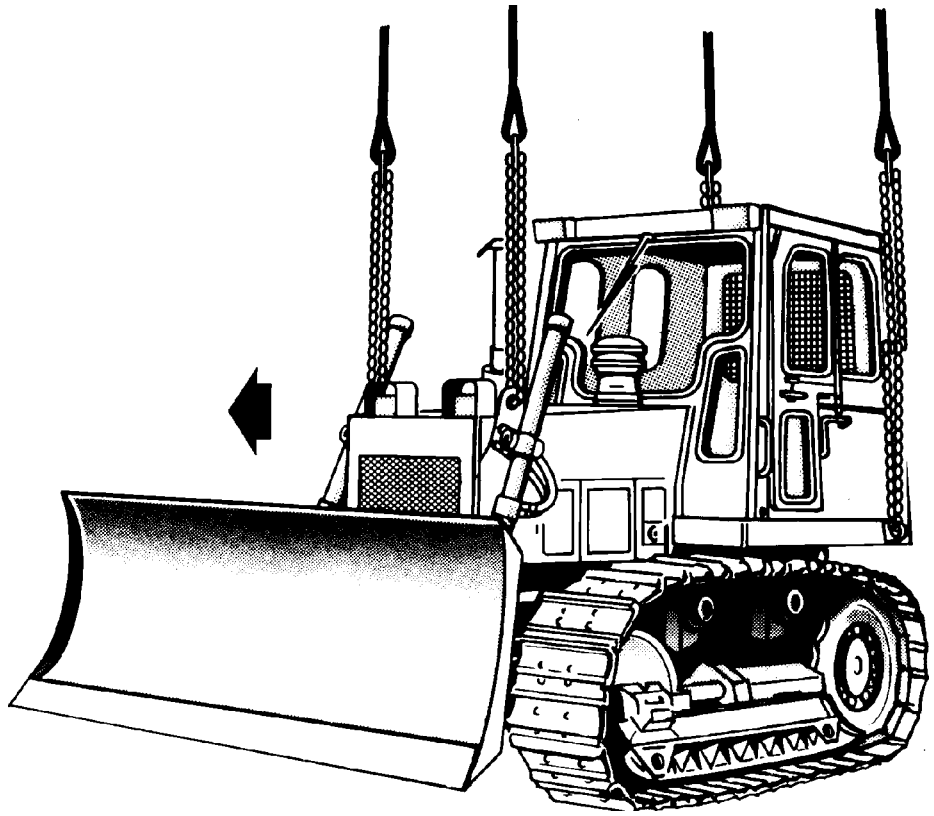

RIGGING STEPS

NOTE: The additional chain section is added to the aft sling leg chain after the sling leg chain is looped through the lift provision because the coupling link will not fit through the opening in the lift provision.

1. Place two sling legs on apex fitting number 1. Position apex fitting number 1 on top of the engine compartment .

2. Loop the chain end of the left and right sling legs through their respective lift provisions located on the front end of the engine compartment. Place the correct link from Table 8-3 in the grab hook.

3. Place two sling legs on apex fitting number 2. Position apex fitting number 2 on top of the cab.

4. Loop the chain end of the left and right sling legs through their respective lift provisions located near the base of the cab. Using the coupling link, add the chain length to the sling leg chain. Place the correct link from Table 8-3 in the grab hook. Secure the excess chain with tape or Type III nylon cord.

5. Pad the chains where they contact the load.

6. Cluster and tie or tape (breakaway technique) the sling legs in each sling set together to prevent entanglement during hookup and lift-off.

Figure 8-3. Tractor, Full-Tracked, Case Model 1150E

8-5. Tractor (Dozer), Full-Tracked, Type III, JD450G

a. Applicability. The following items in Table 8-4 are certified for the helicopter(s) listed in the following table by the US Army Soldier Systems Center:

Table 8-4. Tractor (Dozer), Full-Tracked, Type III, JD450G

NOMENCLATURE	MAX WEIGHT (POUNDS)	SLING SET	LINK COUNT FRONT/ REAR	TYPE OF AIRCRAFT	RECOMMENDED AIRSPEED (KNOTS)
Tractor (Dozer), Full-Tracked, Type III, JD450G	18,300	25K	3/10	CH-47	100
Tractor (Dozer), Full-Tracked, Type III, JD450G, without ROPS	17,700	25K	3/10	CH-47	100
Tractor (Dozer), Full-Tracked, Type III, JD450G, without ROPS and Winch	16,160	25K	3/10	CH-47	100

b. Materials. The following materials are required to rig this load:

(1) Sling set (25,000-pound capacity) with one additional apex fitting .

(a) Chain length, part number 38850-00053-102, from a 25,000-pound capacity sling set (4 each).

(b) Coupling link, part number 664241, from a 25,000-pound sling set (4 each).

(2) Tape, adhesive, pressure-sensitive, 2-inch wide roll.

(3) Cord, nylon, Type III, 550-pound breaking strength.

(4) Webbing, cotton, 1/4-inch, 80-pound breaking strength.

(5) Heavy padding (1/4 section of a steel-belted tire or a length of fire hose or equivalent) (2 each).

c. Personnel. Two persons can prepare and rig this load in 15 minutes.

d. Procedures. The following procedures apply to this load:

(1) Preparation. Prepare the load using the following steps:

(a) Connect one additional chain length to each chain on each sling set with a coupling link.

(b) Prepare the tractor for mission needs using the operator's manual. Special tools may be required to remove the ROPS or winch.

(c) Tape rear sling guides on the ROPS, all lights, gages, and glass.

(d) Engage the hand brake and place the transmission in neutral.

(e) Secure all loose equipment with tape or Type III nylon cord.

(f) Ensure the fuel tank is not over 3/4 full. Ensure the fuel tank cap is in the vent position. Inspect the oil filter caps and battery caps for proper installation.

(2) Rigging. Rig the load according to the steps in Figure 8-4.

(3) Hookup. Two hookup teams are required for this load. The static discharge person discharges the static electricity. The forward hookup person stands on top of

the dozer and places apex fitting 2 onto the forward cargo hook. The aft hookup person stands on the ROPS or aft deck and places apex fitting 1 onto the aft cargo hook. The hookup teams then carefully dismount the dozer and remain close to the load as the helicopter removes slack from the sling legs. When successful hookup is assured, the hookup teams quickly exit the area underneath the helicopter to the designated rendezvous point.

(4) Derigging. Derigging is the reverse of the preparation and rigging procedures in steps d (1) and d (2).

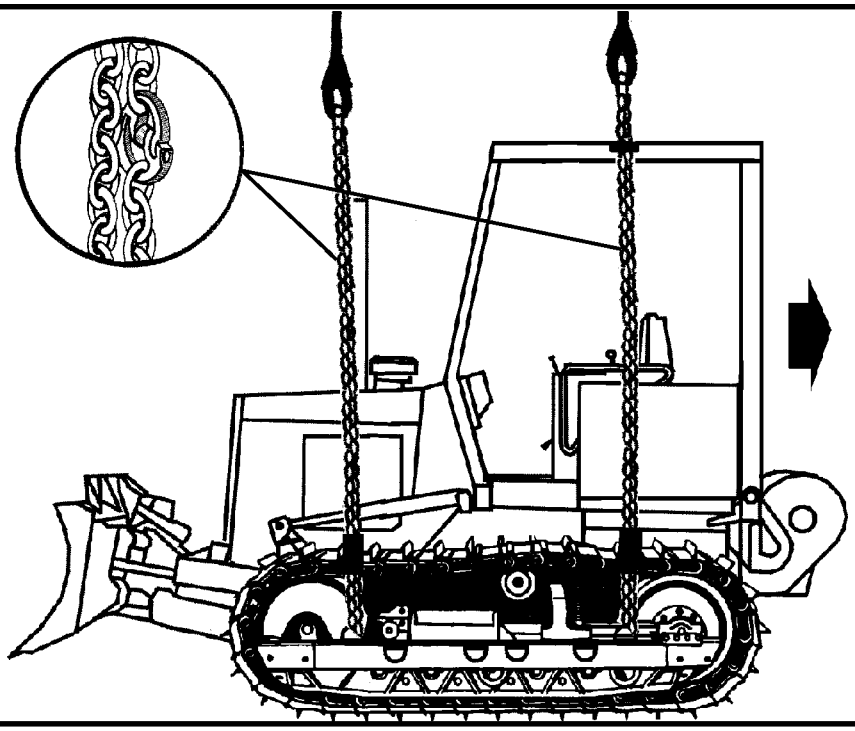

RIGGING STEPS

NOTE: Padding for the rear chains cannot be added until the chains have been routed through the sling guides and attached to the grab hooks.

1. Place two sling legs on apex fitting number 1. Position apex fitting number 1 on top of the engine compartment .

2. Loop the chain end of the left and right sling legs through their respective lift provisions located aft of the front idler. Place the correct link from Table 8-4 in the grab hook.

3. Place two sling legs on apex fitting number 2. Position apex fitting number 2 on top of the ROPS.

4. Loop the chain end of the left sling leg through the left rear sling guide on the ROPS, down through the left rear lift provision, and back up through the left rear sling guide. Place the correct link from Table 8-4 in the grab hook. Secure the excess chain with tape or Type III nylon cord. Repeat the above procedures using the right sling leg on the right side of the dozer.

5. Secure heavy padding to the slings in the area where they contact the tracks.

6. Raise the apex fittings above the dozer. Cluster and tie or tape (breakaway technique) the sling legs in each sling set together to prevent entanglement during hookup and lift-off.

Figure 8-4. Tractor (Dozer), Full-Tracked, Type III, JD450G

8-6. Tractor, Wheeled, Industrial, Case Model 580

a. Applicability. The following item in Table 8-5 is certified for the helicopter(s) listed in the following table by the US Army Soldier Systems Center:

Table 8-5. Tractor, Wheeled, Industrial, Case Model 580

NOMENCLATURE	MAX WEIGHT (POUNDS)	SLING SET	LINK COUNT FRONT/ REAR	TYPE OF AIRCRAFT	RECOMMENDED AIRSPEED (KNOTS)
Tractor, Case, 580	10,000	15K	37/59	CH-53	110

b. Materials. The following materials are required to rig this load:

(1) Sling set (15,000-pound capacity) with one additional apex fitting .

(a) Chain length, part number 34080-4, from a 15,000-pound capacity sling set (2 each).

(b) Coupling link, part number 31611, from a 15,000-pound sling set (2 each).

(2) Tape, adhesive, pressure-sensitive, 2-inch wide roll.

(3) Cord, nylon, Type III, 550-pound breaking strength.

(4) Webbing, cotton, 1/4-inch, 80-pound breaking strength.

(5) Strap, cargo, tiedown, CGU-1/B (2 each).

c. Personnel. Two persons can prepare and rig this load in 20 minutes.

d. Procedures. The following procedures apply to this load:

(1) Preparation. Prepare the load using the following steps:

(a) Connect one additional chain length to each chain on sling set number 1 with a coupling link.

(b) Raise the front bucket halfway and tilt the bucket towards the rear.

(c) Position the backhoe arm with the bucket in the UP position. Secure the arm with the CGU-1/B tiedown straps to prevent swinging. Route the tiedowns from the stabilizer to the arm.

(d) Engage the hand brake and place the transmission in neutral.

(e) Secure all caps lids and doors with tape or Type III nylon cord. Tape all lights, gages, and glass.

(f) Ensure the fuel tank is not over 3/4 full. Ensure the fuel tank cap is in the vent position. Inspect the oil filter caps and battery caps for proper installation.

(2) Rigging. Rig the load according to the steps in Figure 8-5.

(3) Hookup. Two hookup teams are required for this load. The static discharge person discharges the static electricity. The forward hookup person stands on top of the engine deck and places apex fitting 1 onto the forward cargo hook. The aft hookup person stands on the ROPS or aft deck and places apex fitting 2 onto the aft cargo hook. The hookup teams then carefully dismount the dozer and remain close to the load as the helicopter removes slack from the sling legs. When successful hookup is assured, the hookup teams quickly exit the area underneath the helicopter to the designated rendezvous point.

(4) Derigging. Derigging is the reverse of the preparation and rigging procedures in steps d (1) and d (2).

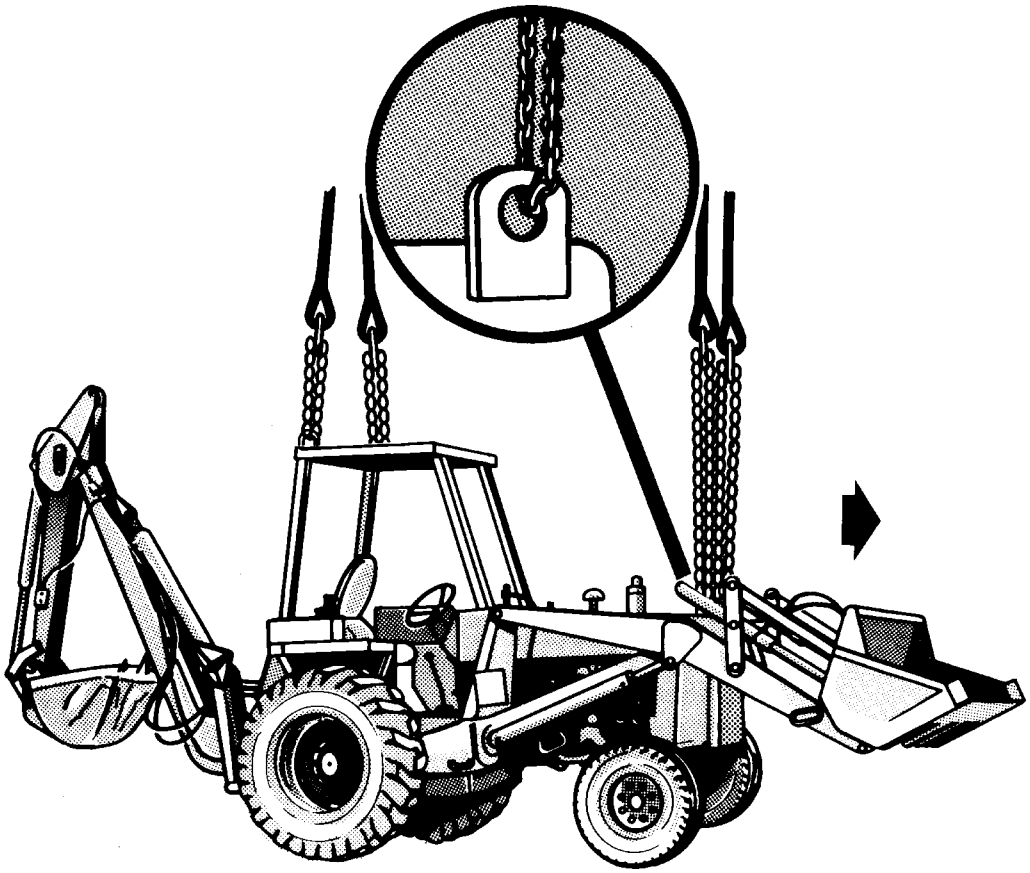

RIGGING STEPS

1. Place two sling legs on apex fitting number 1. Position apex fitting number 1 on top of the engine compartment .

2. Loop the chain end of the left and right sling legs through their respective lift provisions located on the front corners of the engine hook. Place the correct link from Table 8-5 in the grab hook. Secure the excess chain with tape or Type III nylon cord.

3. Place two sling legs on apex fitting number 2. Position apex fitting number 2 on top of the ROPS.

4. Loop the chain end of the left and right sling legs through their respective lift provisions located on the rear corners of the ROPS. Place the correct link from Table 8-5 in the grab hook. Secure the excess chain with tape or Type III nylon cord.

5. Raise the apex fittings above the tractor. Cluster and tie or tape (breakaway technique) the sling legs in each sling set together to prevent entanglement during hookup and lift-off.

Figure 8-5. Tractor (Dozer), Full-Tracked, Type III, JD450G

8-7. Small Emplacement Excavator (SEE)

a. Applicability. The following items in Table 8-6 are certified for the helicopter(s) listed in the following table by the US Army Soldier Systems Center:

Table 8-6. Small Emplacement Excavator (SEE)

NOMENCLATURE	MAX WEIGHT (POUNDS)	SLING SET	LINK COUNT FRONT/ REAR	TYPE OF AIRCRAFT	RECOMMENDED AIRSPEED (KNOTS)
Small Emplacement Excavator	16,240	25K	Listed in Rigging Steps	CH-47	100
Small Emplacement Excavator	16,240	40K	Listed in Rigging Steps	CH-53	125

b. Materials. The following materials are required to rig this load:

(1) Sling set (25,000-pound capacity) with one additional apex fitting (CH-47 only).

OR

(2) Sling set (40,000-pound capacity) with one additional apex fitting (CH-53 only).

(3) Tape, adhesive, pressure-sensitive, 2-inch wide roll.

(4) Cord, nylon, Type III, 550-pound breaking strength.

(5) Webbing, cotton, 1/4-inch, 80-pound breaking strength.

(6) Felt sheet, cattle hair, Type IV, 1/2-inch or suitable padding.

c. Personnel. Two persons can prepare and rig this load in 30 minutes.

d. Procedures. The following procedures apply to this load:

(1) Preparation. Prepare the load using the following steps:

(a) Elevate the bucket halfway and tilt toward the rear. Ensure that the front end loader assembly travel locks located at the end of both front end loader boom cylinders are properly pinned in place.

(b) Secure the steering wheel, doors, and all loose equipment with tape or Type III nylon cord.

(c) Remove the pre-air cleaner and secure it on the seat with Type III nylon cord.

(d) Tape the exhaust pipe opening, all lights, and glass.

(e) Fold side mirrors inboard and tie together with Type III nylon cord. Tape the windshield wipers to the windshield and secure the engine compartment hood with tape or Type III nylon cord.

(f) Engage the hand brake and place the transmission in neutral.

(g) Secure all hydraulic lines with tape or Type III nylon cord.

(h) Ensure the fuel tank is not over 3/4 full. Inspect fuel tank cap, oil filler cap, and battery caps for proper installation.

(2) Rigging. Rig the load according to the steps in Figure 8-6.

(3) Hookup. Two hookup teams are required for this load. The static wand person discharges the static electricity with the static wand. The forward hookup person stands on top of the FOPS and places apex fitting 2 onto the forward cargo hook. The aft hookup person stands on top of the FOPS and places apex fitting 1 onto the aft

cargo hook. The hookup teams then carefully dismount the sections and remain close to the load as the helicopter removes slack from the sling legs. When successful hookup is assured, the hookup teams quickly exit the area underneath the helicopter to the designated rendezvous point.

(4) Derigging. Derigging is the reverse of the preparation and rigging procedures in steps d (1) and d (2).

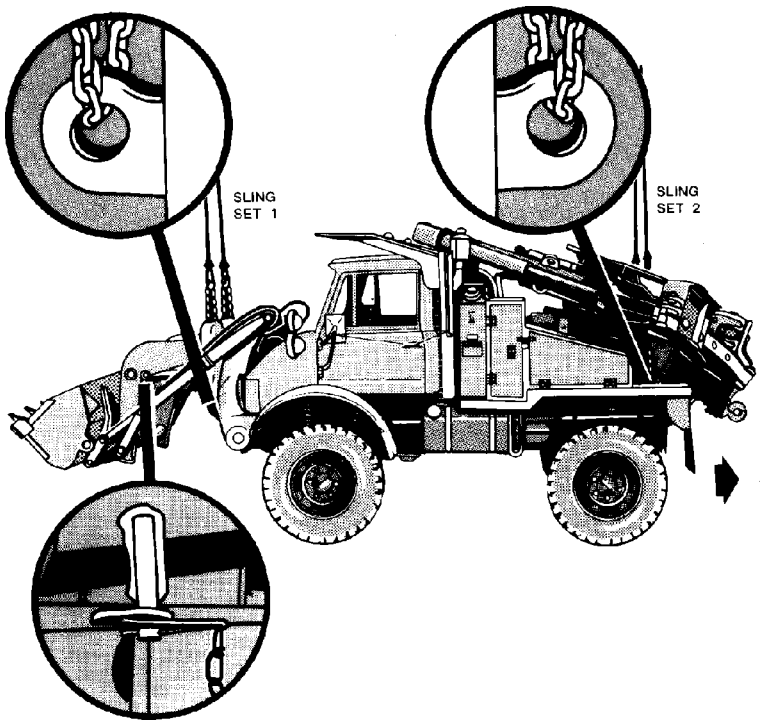

RIGGING STEPS

NOTE: Use the conversion chart in Appendix B for 40,000-pound capacity sling set link counts

1. Place two sling legs on apex fitting number 1. Position apex fitting number 1 on forward end of the FOPS.

2. Loop the chain end of the left and right sling legs through their respective lift provisions located on the front bumper inboard of the front end loader support arms. Place link 3 in the grab hook.

3. Place two sling legs on apex fitting number 2. Position apex fitting number 2 on top of the aft end of the FOPS.

4. Loop the chain end of the left sling leg through the left lift provision (closest to the operator's seat) located at the top left between the left rear wheel and frame. Place link 5 in the grab hook.

5. Loop the chain end of the right sling leg through the right lift provision (closest to the backhoe bucket) located at the top right between the right rear wheel and frame. Place link 10 in the grab hook. Secure the excess chain with tape or Type III nylon cord.

6. Pad the chains where they contact the load.

7. Raise the apex fittings above the tractor. Cluster and tie or tape (breakaway technique) the sling legs in each sling set together to prevent entanglement during hookup and lift-off.

Figure 8-6. Small Emplacement Excavator (SEE)

8-8. High Mobility Materiel Handler (HMMH)

a. Applicability. The following item in Table 8-7 is certified for the helicopter(s) listed in the following table by the US Army Soldier Systems Center:

Table 8-7. High Mobility Materiel Handler (HMMH)

NOMENCLATURE	MAX WEIGHT (POUNDS)	SLING SET	LINK COUNT FRONT/ REAR	TYPE OF AIRCRAFT	RECOMMENDED AIRSPEED (KNOTS)
High Mobility Materiel Handler	15,650	25K	3/56	CH-47	110

b. Materials. The following materials are required to rig this load:

(1) Sling set (25,000-pound capacity) with one additional apex fitting .

(2) Tape, adhesive, pressure-sensitive, 2-inch wide roll.

(3) Cord, nylon, Type III, 550-pound breaking strength.

(4) Webbing, cotton, 1/4-inch, 80-pound breaking strength.

(5) Felt sheet, cattle hair, Type IV, 1/2-inch or suitable padding.

c. Personnel. Two persons can prepare and rig this load in 30 minutes.

d. Procedures. The following procedures apply to this load:

(1) Preparation. Prepare the load using the following steps:

(a) Ensure all travel locks are pinned in place.

(b) Secure the steering wheel, doors, and all loose equipment with tape or Type III nylon cord.

(c) Fold side mirrors inboard and tie together with Type III nylon cord. Tape the windshield wipers to the windshield and secure the engine compartment hood with tape or Type III nylon cord.

(d) Engage the hand brake and place the transmission in neutral.

(e) Secure all hydraulic lines with tape or Type III nylon cord.

(f) Ensure the fuel tank is not over 3/4 full. Inspect fuel tank cap, oil filler cap, and battery caps for proper installation.

(2) Rigging. Rig the load according to the steps in Figure 8-7.

(3) Hookup. Two hookup teams are required for this load. The static wand person discharges the static electricity with the static wand. The forward hookup person stands on top of the FOPS and places apex fitting 1 onto the forward cargo hook. The aft hookup person stands on top of the FOPS and places apex fitting 2 onto the aft cargo hook. The hookup teams then carefully dismount the sections and remain close to the load as the helicopter removes slack from the sling legs. When successful hookup is assured, the hookup teams quickly exit the area underneath the helicopter to the designated rendezvous point.

(4) Derigging. Derigging is the reverse of the preparation and rigging procedures in steps d (1) and d (2).

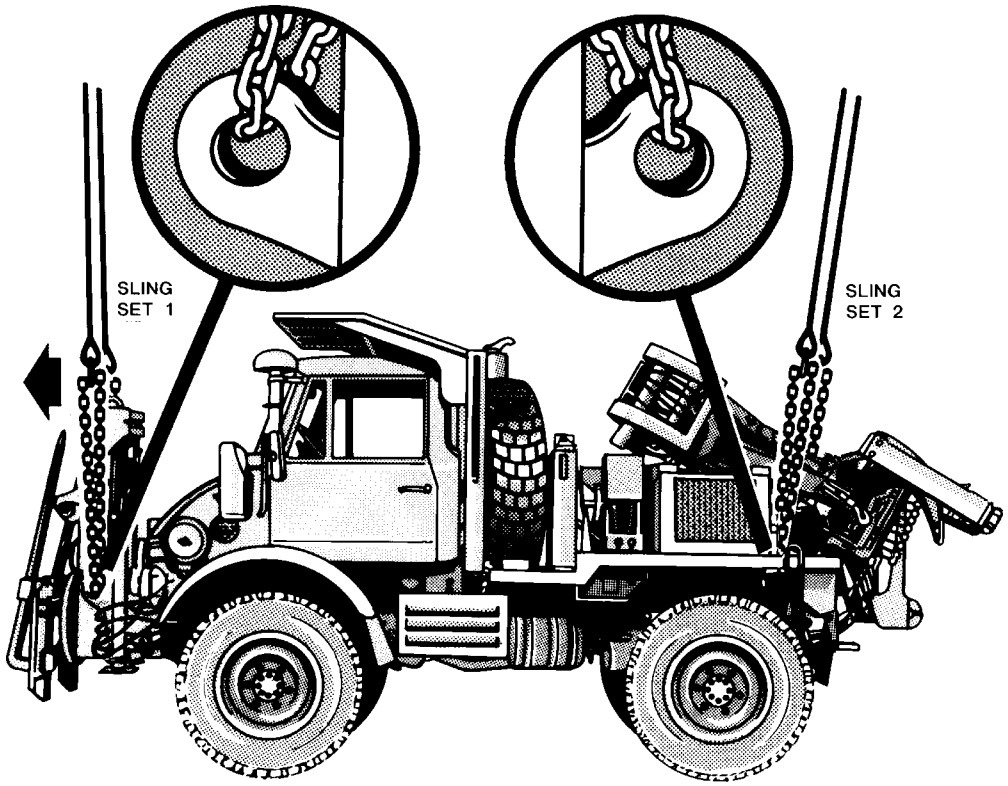

RIGGING STEPS

1. Place two sling legs on apex fitting number 1. Position apex fitting number 1 on forward end of the FOPS.

2. Loop the chain end of the left and right sling legs through their respective lift provisions located near the front bumper outboard of the forklift frame. Place the correct link from Table 8-7 in the grab hook.

3. Place two sling legs on apex fitting number 2. Position apex fitting number 2 on top of the aft end of the FOPS.

4. Loop the chain end of the left and right sling legs through their respective lift provisions located on the frame inboard of the rear wheels. Place the correct link from Table 8-7 in the grab hook. Secure the excess chain with tape or Type III nylon cord.

5. Pad the chains where they contact the load. Position the aft sling legs at their contact point with the crane boom and tie or tape (breakaway technique).

6. Raise the apex fittings above the tractor. Cluster and tie or tape (breakaway technique) the sling legs in each sling set together to prevent entanglement during hookup and lift-off.

Figure 8-7. High Mobility Materiel Handler (HMMH)

8-9. 950BS Scoop Loader, Sectionalized

a. Applicability. The following items in Table 8-8 are certified for the helicopter(s) listed in the following table by the US Army Soldier Systems Center:

Table 8-8. 950BS Scoop Loader, Sectionalized

NOMENCLATURE	MAX WEIGHT (POUNDS)	SLING SET	LINK COUNT FRONT/ REAR	TYPE OF AIRCRAFT	RECOMMENDED AIRSPEED (KNOTS)
Loader, Scoop, 950BS, Work Section	15,830	25K	55/3	CH-47	120
Loader, Scoop, 950BS, Power Section	16,110	25K	10/20	CH-47	120

b. Materials. The following materials are required to rig this load:

(1) Sling set (25,000-pound capacity) (2 each) with two additional apex fittings.

(a) Chain length, part number 38850-00053-102 from a 25,000-pound capacity sling set (2 each).

(b) Coupling link, part number 664241, from a 25,000-pound sling set (2 each).

(2) Tape, adhesive, pressure-sensitive, 2-inch wide roll.

(3) Cord, nylon, Type III, 550-pound breaking strength.

(4) Webbing, cotton, 1/4-inch, 80-pound breaking strength.

(5) Tiedown assembly, 15-foot dacron (2 each).

(6) Tiedown assembly, chain, MB-1 (10,000-pound capacity) (2 each).

c. Personnel. Four persons can sectionalize the scoop loader in 2.5 hours. Two persons can prepare and rig this load in 20 minutes per section.

d. Procedures. The following procedures apply to this load:

(1) Preparation. Prepare the load using the following steps:

(a) Sectionalize the scoop loader according to the instructions in the operator's manual.

(b) Secure the bucket lift arm assembly to the work section housing with two MB-1 chain tiedown assemblies. Pass a chain around the left side of the bucket control group arm cross tube, through the lift point on the housing, and secure the running ends with an MB-1 tensioning device. Repeat this procedure on the right side of the cross tube.

CAUTION
THE CHAINS MUST BE TIGHT TO PREVENT SAGGING OF THE HYDRAULIC SYSTEM DURING FLIGHT.

(c) Cover all hitch pins and pivot holes with plastic and tape to prevent contamination by dust and dirt on both sections.

(d) Tape all lights.

(e) Secure tool basket lid, located in the bucket, with Type III nylon cord.

(f) Secure all power section hoses and cables located on the front of the section with Type III nylon cord.

(g) Secure the floating axle in level position with two

15-foot dacron tiedown assemblies. On the left side, pass the running end of a tiedown strap down through the tiedown provision aft of the axle, under the axle, and up through the tiedown provision forward of the axle. Secure the running ends of the strap using a D-ring and load binder on top of the axle. Repeat this procedure on the right side. Fold and secure excess webbing and load binder with cotton webbing or tape.

(h) Install the low velocity airdrop suspension provisions on the left and right sides of the operator's platform (these provisions are used as forward lift provisions for sling load). Torque the mounting bolts to 640 + 80 foot-pounds.

(i) Remove the exhaust stack and stow on the component tray mounted in the work section bucket. Cover the opening of the exhaust stack with tape.

(j) Remove the pre-air cleaner and pad. Stow the pre-air cleaner in the stowage compartment located behind the operator's seat. Cover the opening of the pre-air cleaner with tape.

(k) Fold the back of the operator seat down and secure in place with Type III nylon cord. Secure the seat belt over the seat back.

(l) Tape all lights and gages.

(m) Secure all doors and covers with tape or Type III nylon cord.

(n) Place controls in neutral and release brakes.

(o) Ensure the fuel tank is not over 3/4 full. Inspect fuel tank cap, oil filler cap, and battery caps for proper installation.

(2) Rigging. Rig the load according to the steps in Figure 8-8.

(3) Hookup. Two hookup teams are required for each section. The static discharge person discharges the static electricity. The work station hookup team stands on the left and right fenders. The static discharge person discharges the static electricity. The forward hookup person places apex fitting 1 onto the forward cargo hook. The aircraft must then move forward in order to hookup apex fitting number two. The aft hookup person places apex fitting 2 onto the aft cargo hook. The power station hookup team stands on the operator's platform and engine hood. The static discharge person discharges the static electricity. The forward hookup person places apex fitting 1 onto the forward cargo hook. The aft hookup person places apex fitting 2 onto the aft cargo hook. The hookup teams then carefully dismount the sections and remain close to the load as the helicopter removes slack from the sling legs. When successful hookup is assured, the hookup teams quickly exit the area underneath the helicopter to the designated rendezvous point.

(4) Derigging. Derigging is the reverse of the preparation and rigging procedures in steps d (1) and d (2).

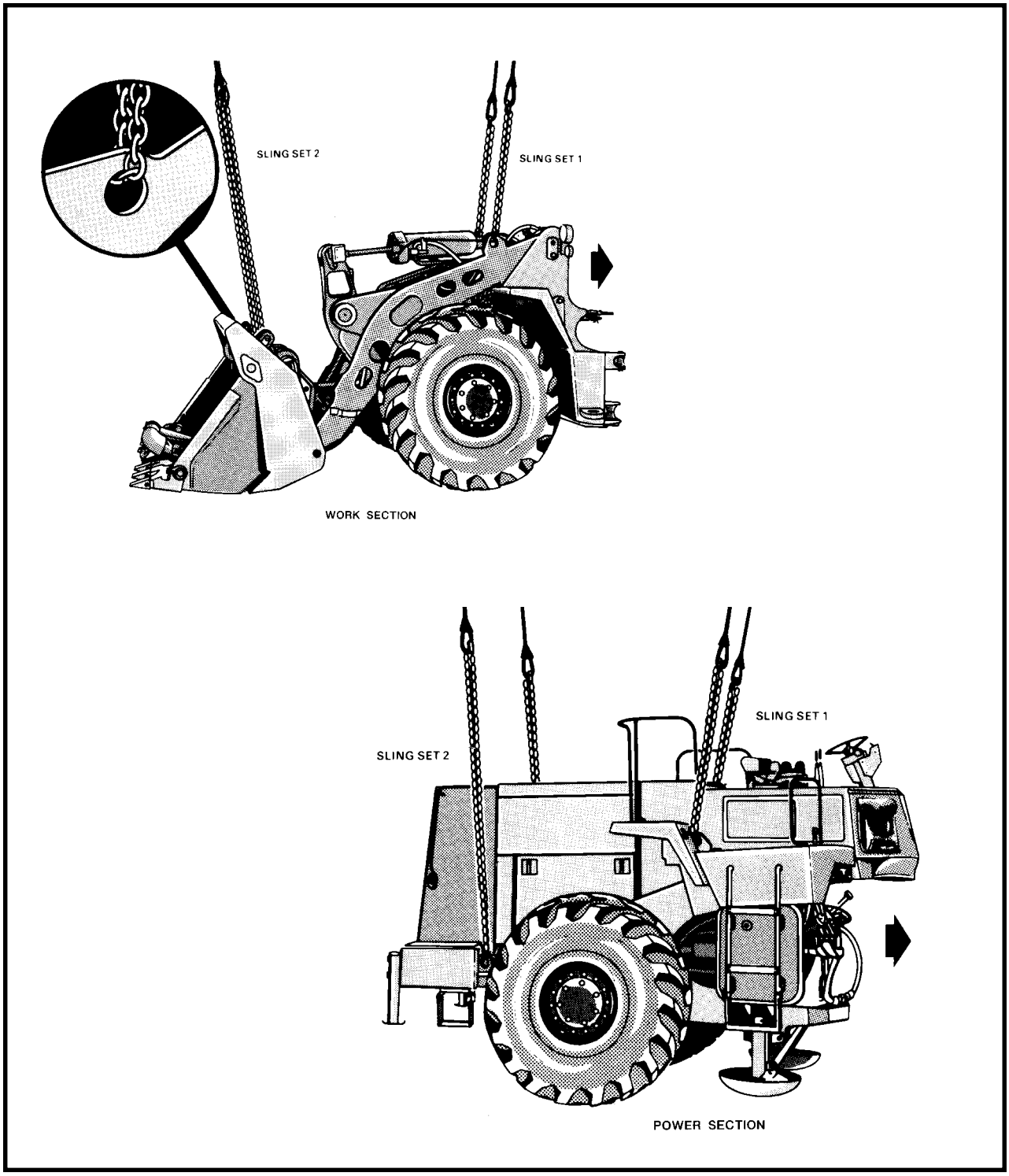

Figure 8-8. 950BS Scoop Loader, Sectionalized

RIGGING STEPS WORK SECTION	RIGGING STEPS POWER SECTION
1. Place two sling legs on apex fitting number 1. Position apex fitting number 1 on top of the aft end of the work section (opposite the bucket end). **2.** Loop the chain end of the left and right sling legs through their respective lift provisions located on top of the bucket lift arms. Place the correct link from Table 8-8 in the grab hook. Secure the excess chain with tape or Type III nylon cord. **3.** Place two sling legs on apex fitting number 2. Position apex fitting number 2 on top of the bucket. **4.** Loop the chain end of the left and right sling legs through their respective lift provisions located on the rear of the bucket. Place the correct link from Table 8-8 in the grab hook. **5.** Raise the apex fittings above the load. Cluster and tie or tape (breakaway technique) the sling legs in each sling set together to prevent entanglement during hookup and lift-off.	**1.** Place two sling legs on apex fitting number 1. Position apex fitting number 1 on top of the power section immediately behind the operator's seat. **2.** Loop the chain end of the left and right sling legs through their respective lift provisions located on the operator's platform. Place the correct link from Table 8-8 in the grab hook. Secure the excess chain with tape or Type III nylon cord. **3.** Place two sling legs on apex fitting number 2. Using the coupling links add an additional chain length to each sling leg chain. Position apex fitting number 2 on top of the engine deck. **4.** Loop the chain end of the left and right sling legs through their respective lift provisions located on the forward end of the battery box. Place the correct link from Table 8-8 in the grab hook. Secure the excess chain with tape or Type III nylon cord. **5.** Raise the apex fittings above the load. Cluster and tie or tape (breakaway technique) the sling legs in each sling set together to prevent entanglement during hookup and lift-off.

Figure 8-8. 950BS Scoop Loader, Sectionalized (continued)

8-10. 130GS Grader, Sectionalized

a. Applicability. The following items in Table 8-9 are certified for the helicopter(s) listed in the following table by the US Army Soldier Systems Center:

Table 8-9. 130GS Grader, Sectionalized

NOMENCLATURE	MAX WEIGHT (POUNDS)	SLING SET	LINK COUNT FRONT/ REAR	TYPE OF AIRCRAFT	RECOMMENDED AIRSPEED (KNOTS)
130GS Grader, Front Section with Scarifier and ROPS and Low-Velocity Airdrop (LVAD) suspension provisions removed	16,120	25K	3/77	CH-47	100
130GS Grader, Rear Section	14,270	25K	36/56	CH-47	100

b. Materials. The following materials are required to rig this load:

(1) Sling set (25,000-pound capacity) (2 each) with two additional apex fittings.

(2) Tape, adhesive, pressure-sensitive, 2-inch wide roll.

(3) Cord, nylon, Type III, 550-pound breaking strength.

(4) Webbing, cotton, 1/4-inch, 80-pound breaking strength.

(5) Felt sheet, cattle hair, Type IV, 1/2-inch or suitable padding

(6) Strap, cargo, tiedown (as required).

(7) Plastic bags.

c. Personnel. Two persons can prepare and rig each section in 20 minutes after removing the ROPS and LVAD suspension provision and sectionalizing the grader.

d. Procedures. The following procedures apply to this load:

(1) Preparation. Prepare the load using the following steps:

(a) Sectionalize the grader according to the instructions in the operator's manual.

(b) Remove the ROPS and LVAD suspension provisions mounted on the front bolster.

(c) Ensure the fuel tank is not over 3/4 full. Inspect fuel tank cap, oil filler cap, and battery caps for proper installation.

(d) On the front section use CGU-1/B tiedown straps to secure each side of the front axle to front tiedown points.

(e) Loosen the front headlight var, rotate 180 degrees, and retighten. Pad headlights with padding and tape.

(f) Tape the worklight on the front end of the operator's platform.

(g) Secure the steering wheel to the horizontal control bar on both sides with Type III nylon cord.

(h) Secure the seat with Type III nylon cord.

(i) Cover all pivot points in the articulated hitch group with plastic bags and tape.

(j) On the rear section, cover all pivot points in the articulated hitch group with plastic bags and tape.

(k) Remove the throttle handle and place in the toolbox.

(l) Tape all lights and gages.

(m) Pad the instrument panel with padding and tape.

(n) Remove the exhaust stack and air cleaner and secure to the top rails with Type III nylon cord.

(o) Pad and tape the rear working lights and tail-lights.

(p) Secure the doors closed with Type III nylon cord.

(2) Rigging. Rig the load according to the steps in Figure 8-9.

(3) Hookup. Two hookup teams are required for each section. The static discharge person discharges the static electricity. The front section hookup team stands on top of the front section. The forward hookup person places apex fitting 1 onto the forward cargo hook. The aft hookup person places apex fitting 2 onto the aft cargo hook. The rear section hookup team stands on top of the engine compartment. The forward hookup person places apex fitting 1 onto the forward cargo hook. The aft hookup person places apex fitting 2 onto the aft cargo hook. The hookup teams then carefully dismount the sections and remain close to the load as the helicopter removes slack from the sling legs. When successful hookup is assured, the hookup teams quickly exit the area underneath the helicopter to the designated rendezvous point.

(4) Derigging. Derigging is the reverse of the preparation and rigging procedures in steps d (1) and d (2).

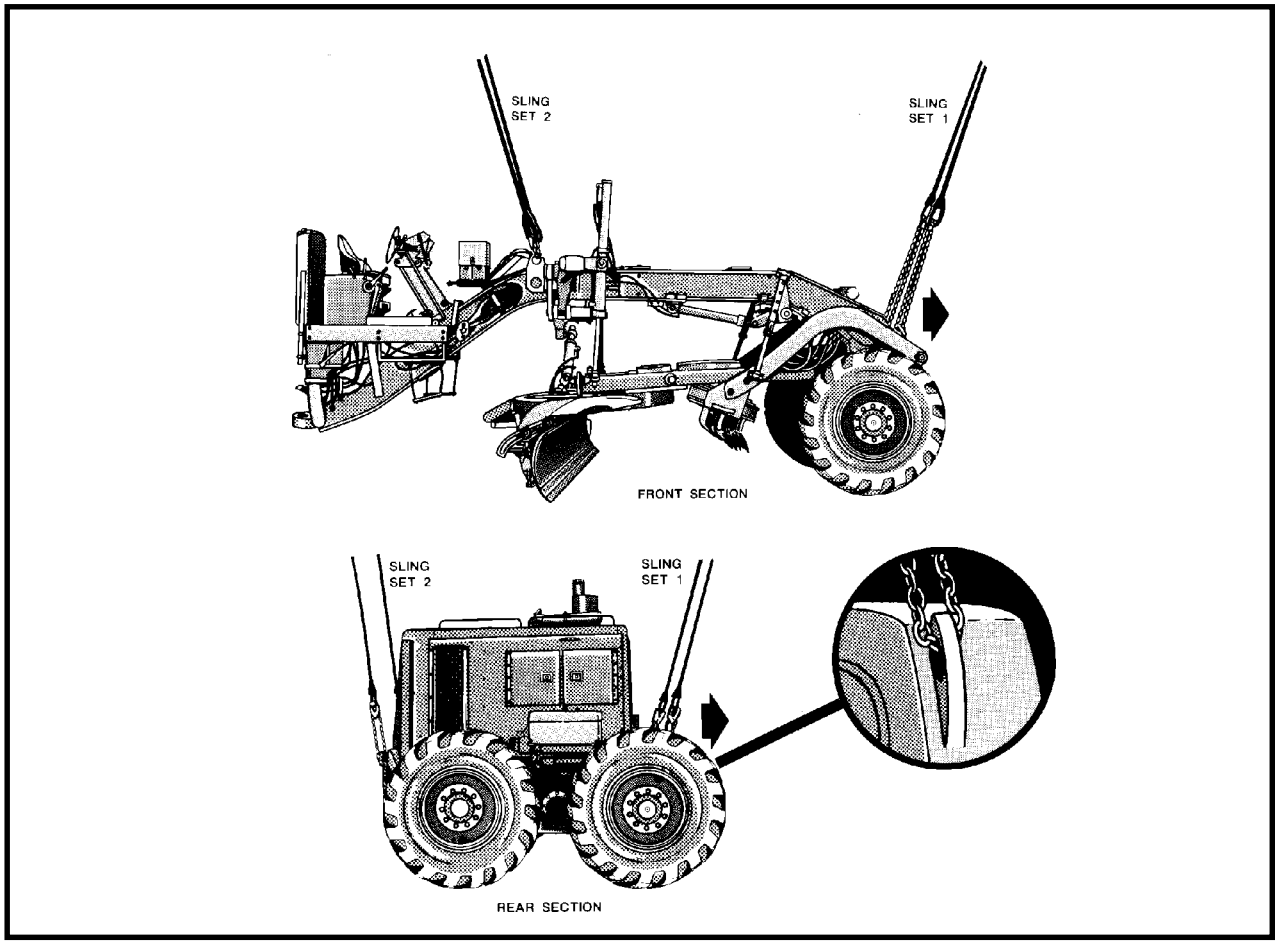

Figure 8-9. 130GS Grader, Sectionalized

RIGGING STEPS FRONT SECTION	RIGGING STEPS REAR SECTION
1. Place two sling legs on apex fitting number 1. Position apex fitting number 1 on top of the front wheels. **2.** Loop the chain end of the left and right sling legs through their respective lift provisions. Place the correct link from Table 8-9 in the grab hook. **3.** Place two sling legs on apex fitting number 2. Position apex fitting number 2 on top of the front section above the blade. **4.** Loop the chain end of the left and right sling legs through their respective lift provisions. Place the correct link from Table 8-9 in the grab hook. Secure the excess chain with tape or Type III nylon cord. **5.** Raise the apex fittings above the load. Cluster and tie or tape (breakaway technique) the sling legs in each sling set together to prevent entanglement during hookup and lift-off.	**1.** Place two sling legs on apex fitting number 1. Position apex fitting number 1 in front of the forward set of wheels. **2.** Loop the chain end of the left and right sling legs through their respective lift provisions located inboard of the forward wheels. Place the correct link from Table 8-9 in the grab hook. Secure the excess chain with tape or Type III nylon cord. **3.** Place two sling legs on apex fitting number 2. Position apex fitting number 2 behind the rear set of wheels. **4.** Loop the chain end of the left and right sling legs through their respective lift provisions. Place the correct link from Table 8-9 in the grab hook. Secure the excess chain with tape or Type III nylon cord. **5.** Raise the apex fittings above the load. Cluster and tie or tape (breakaway technique) the sling legs in each sling set together to prevent entanglement during hookup and lift-off.

Figure 8-9. 130GS Grader, Sectionalized (continued)

8-11. 613BS Scraper, Elevating, Sectionalized

a. Applicability. The following item in Table 8-10 is certified for the helicopter(s) listed in the following table by the US Army Soldier Systems Center:

Table 8-10. 613BS Scraper, Elevating, Sectionalized

NOMENCLATURE	MAX WEIGHT (POUNDS)	SLING SET	LINK COUNT FRONT/ REAR	TYPE OF AIRCRAFT	RECOMMENDED AIRSPEED (KNOTS)
613BS Scraper, Elevating	16,330	25K	40/15	CH-47	120

NOTE: The scraper power section is not certified as a dual point load because of the suspension point configuration.

b. Materials. The following materials are required to rig this load:

(1) Sling set (25,000-pound capacity) with one additional apex fitting.

(2) Tape, adhesive, pressure-sensitive, 2-inch wide roll.

(3) Cord, nylon, Type III, 550-pound breaking strength.

(4) Webbing, cotton, 1/4-inch, 80-pound breaking strength.

(5) Plastic bags (4 each).

c. Personnel. Four persons can sectionalize the scraper in one hour. Two persons can prepare and rig this load in 20 minutes.

d. Procedures. The following procedures apply to this load:

(1) Preparation. Prepare the load using the following steps:

(a) Sectionalize the scaper according to the instructions in the operator's manual.

(b) Stow elevator motor hoses and hanger arms on elevator flights in the bowl, and secure with Type III nylon cord.

(c) Secure hydraulic cylinders up in the stowed position with doubled Type III nylon cord.

(d) Fold and secure the step located on the outside of the bowl.

(e) Fold and secure all hoses and wires with Type III nylon cord.

(f) Tape all lights.

(g) Secure the toolbox lid with Type III nylon cord.

(h) Cover all hitch pin and pin holes with plastic bags and tape.

(2) Rigging. Rig the load according to the steps in Figure 8-10.

(3) Hookup. Two hookup teams are required for this load. The static discharge person discharges the static electricity. The forward hookup person stands forward of the rock guard and places apex fitting 1 (bumper end) onto the forward cargo hook. The aft hookup person places apex fitting 2 onto the aft cargo hook. The hookup teams then carefully dismount the sections and remain close to the load as the helicopter removes slack from the sling legs. When successful hookup is assured, the hookup teams quickly exit the area underneath the helicopter to the designated rendezvous point.

(4) Derigging. Derigging is the reverse of the preparation and rigging procedures in steps d (1) and d (2).

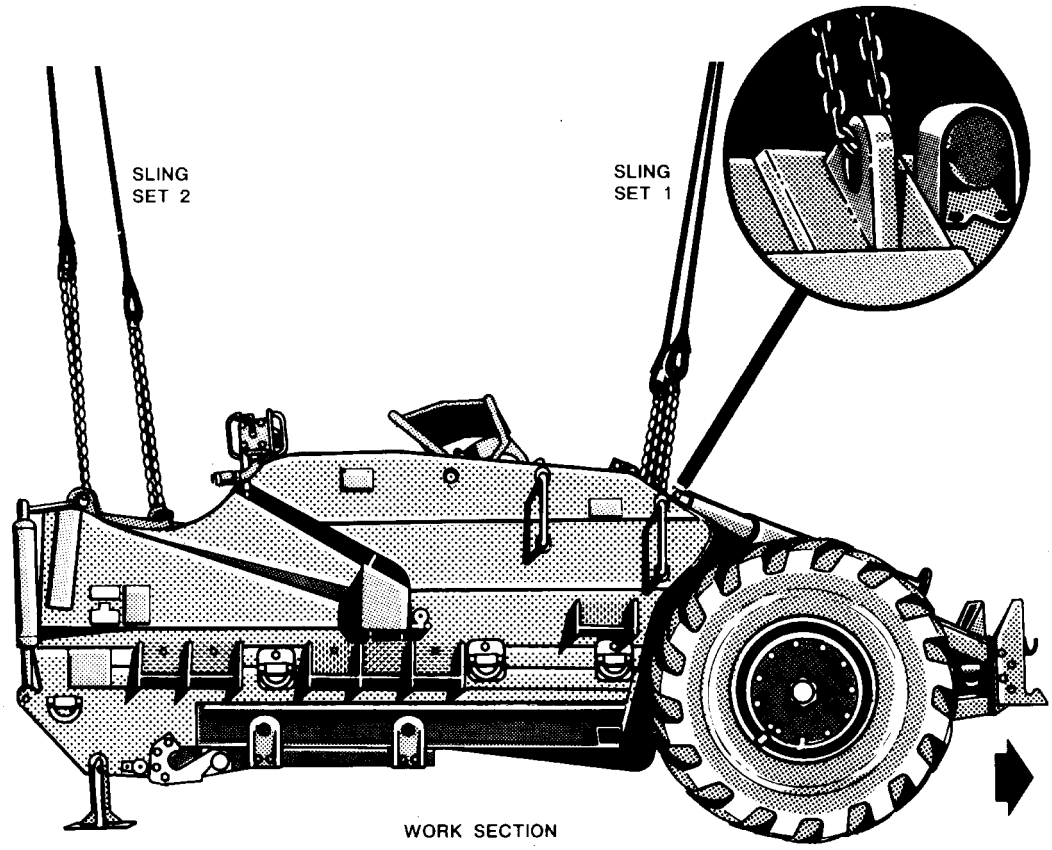

RIGGING STEPS

1. Place two sling legs on apex fitting number 1. Position apex fitting number 1 on the aft end of the rock guard, near the wheels.

2. Loop the chain end of the left and right sling legs through their respective lift provisions located on the aft deck near the wheels. Place the correct link from Table 8-10 in the grab hook. Secure the excess chain with tape or Type III nylon cord.

3. Pull and tie or tape (breakaway technique) the two sling legs to the rock guard.

4. Place two sling legs on apex fitting number 2. Position apex fitting number 2 on top of the rock guard.

5. Loop the chain end of the left and right sling legs through their respective lift provisions located on the front end of the bowl. Place the correct link from Table 8-10 in the grab hook. Secure the excess chain with tape or Type III nylon cord.

6. Pull and tie or tape (breakaway technique) the two sling legs to the rock guard.

7. Raise the apex fittings above the load. Cluster and tie or tape (breakaway technique) the sling legs in each sling set together to prevent entanglement during hookup and lift-off.

Figure 8-10. 613BS Scraper, Elevating, Sectionalized

8-12. 613WDS Water Distributor, Sectionalized

a. Applicability. The following item in Table 8-11 is certified for the helicopter(s) listed in the following table by the US Army Soldier Systems Center:

Table 8-11. 613WDS Water Distributor, Sectionalized

NOMENCLATURE	MAX WEIGHT (POUNDS)	SLING SET	LINK COUNT FRONT/ REAR	TYPE OF AIRCRAFT	RECOMMENDED AIRSPEED (KNOTS)
613WDS Water Distributor work section	15,400	25K	30/45	CH-47	120

NOTE: The scraper power section is not certified as a dual point load because of the suspension point configuration.

b. Materials. The following materials are required to rig this load:

(1) Sling set (25,000-pound capacity) with one additional apex fitting.

(2) Tape, adhesive, pressure-sensitive, 2-inch wide roll.

(3) Cord, nylon, Type III, 550-pound breaking strength.

(4) Webbing, cotton, 1/4-inch, 80-pound breaking strength.

(5) Plastic bags (4 each).

c. Personnel. Four persons can sectionalize the scraper in one hour. Two persons can prepare and rig this load in 20 minutes.

d. Procedures. The following procedures apply to this load:

(1) Preparation. Prepare the load using the following steps:

(a) Sectionalize the scaper according to the instructions in the operator's manual.

(b) Secure the distribution control panel and cable on top of the tank with Type III nylon cord.

(c) Secure hydraulic cylinders up in the stowed position with doubled Type III nylon cord.

(d) Ensure the tank manhole cover is closed and secured.

(e) Secure the hose and reel with Type III nylon cord.

(f) Close and secure the toolbox and hose stowage compartment covers with Type III nylon cord.

(g) Cover all hitch pin and pin holes with plastic bags and tape.

(2) Rigging. Rig the load according to the steps in Figure 8-11.

(3) Hookup. Two hookup teams are required for this load and stand on the work section. The static discharge person discharges the static electricity. The forward hookup person places apex fitting 1 (bumper end) onto the forward cargo hook. The aft hookup person places apex fitting 2 onto the aft cargo hook. The hookup teams then carefully dismount the sections and remain close to the load as the helicopter removes slack from the sling legs. When successful hookup is assured, the hookup teams quickly exit the area underneath the helicopter to the designated rendezvous point.

(4) Derigging. Derigging is the reverse of the preparation and rigging procedures in steps d (1) and d (2).

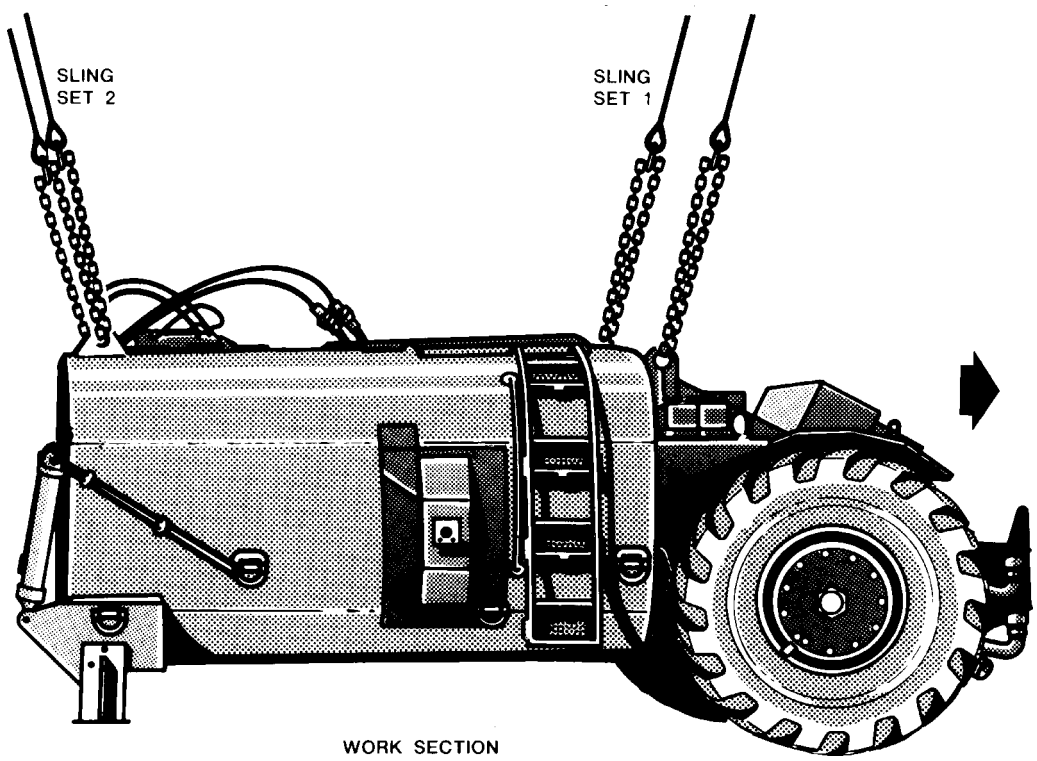

RIGGING STEPS

1. Place two sling legs on apex fitting number 1. Position apex fitting number 1 above the aft (wheel) end of the water tank.

2. Loop the chain end of the left and right sling legs through their respective lift provisions located on the corners of the water tank. Place the correct link from Table 8-11 in the grab hook. Secure the excess chain with tape or Type III nylon cord.

3. Place two sling legs on apex fitting number 2. Position apex fitting number 2 on forward end of the tank.

4. Loop the chain end of the left and right sling legs through their respective lift provisions located on the front end of the tank. Place the correct link from Table 8-11 in the grab hook. Secure the excess chain with tape or Type III nylon cord.

5. Raise the apex fittings above the load. Cluster and tie or tape (breakaway technique) the sling legs in each sling set together to prevent entanglement during hookup and lift-off.

Figure 8-11. 613WDS Water Distributor, Sectionalized

8-13. Roller, Towed, Vibrating

a. Applicability. The following item in Table 8-12 is certified for the helicopter(s) listed in the following table by the US Army Soldier Systems Center:

Table 8-12. Roller, Towed, Vibrating

NOMENCLATURE	MAX WEIGHT (POUNDS)	SLING SET	LINK COUNT FRONT/ REAR	TYPE OF AIRCRAFT	RECOMMENDED AIRSPEED (KNOTS)
Roller, Towed, Vibrating, Smooth Drum, Airmobile	4,830	10K	3/3	CH-47	120

b. Materials. The following materials are required to rig this load:

(1) Sling set (10,000-pound capacity) with one additional apex fitting.

(2) Tape, adhesive, pressure-sensitive, 2-inch wide roll.

(3) Cord, nylon, Type III, 550-pound breaking strength.

(4) Webbing, cotton, 1/4-inch, 80-pound breaking strength.

c. Personnel. Two persons can prepare and rig this load in 10 minutes.

d. Procedures. The following procedures apply to this load:

(1) Preparation. Prepare the load using the following steps:

(a) Lift the tongue and position the support leg in its stowed or travel position and secure with Type III nylon cord.

(b) Secure the battery box cover, fuel cap, hoses, and any loose items with tape or Type III nylon cord.

(c) Ensure the fuel tank is not over 3/4 full. Inspect fuel tank cap, oil filler cap, and battery caps for proper installation.

(2) Rigging. Rig the load according to the steps in Figure 8-12.

(3) Hookup. Two hookup teams are required for this load and stand beside the roller. The static discharge person discharges the static electricity. The forward hookup person places apex fitting 2 onto the forward cargo hook. The aft hookup person places apex fitting 1 onto the aft cargo hook. The hookup teams then carefully dismount the sections and remain close to the load as the helicopter removes slack from the sling legs. When successful hookup is assured, the hookup teams quickly exit the area underneath the helicopter to the designated rendezvous point.

(4) Derigging. Derigging is the reverse of the preparation and rigging procedures in steps d (1) and d (2).

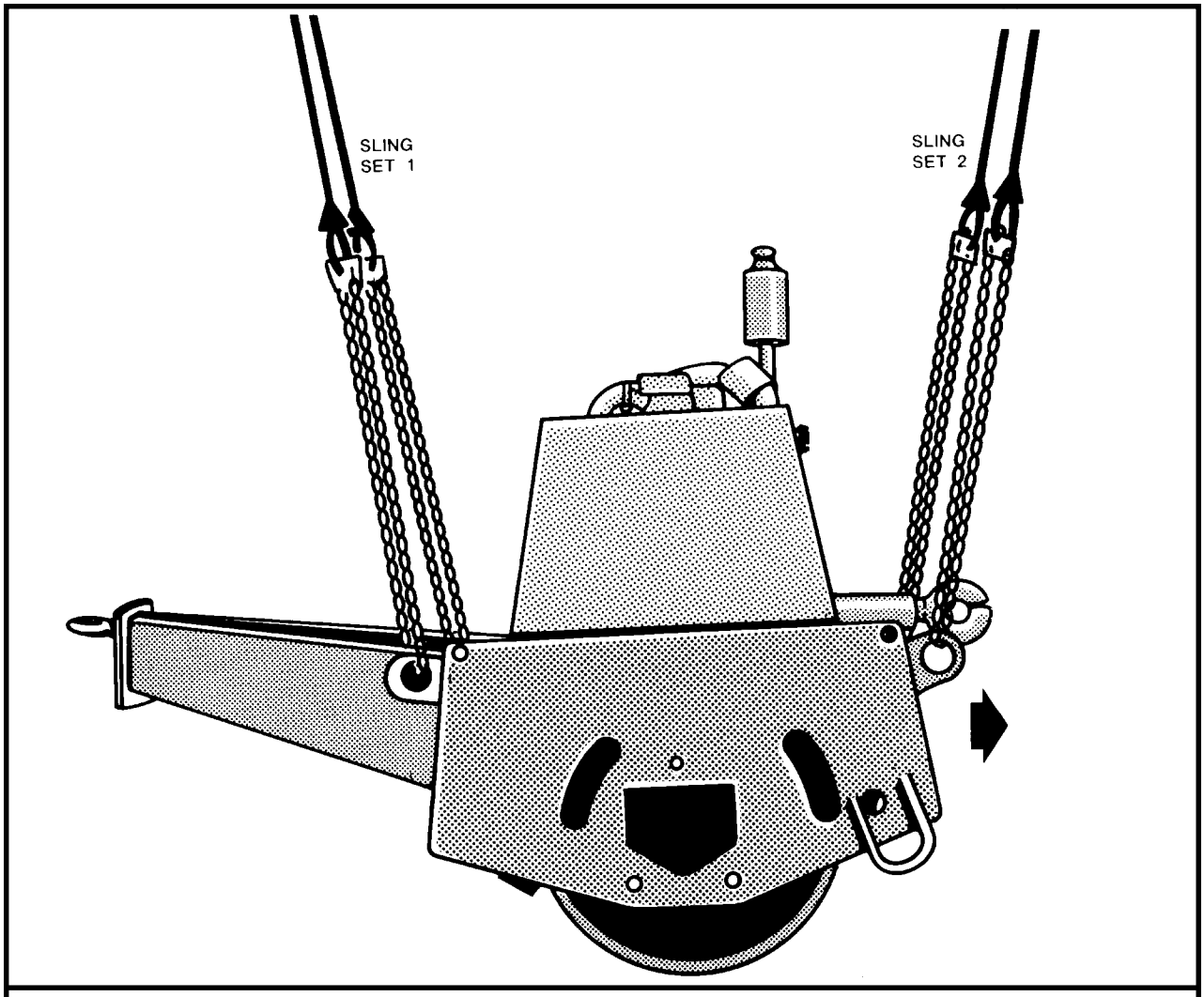

RIGGING STEPS

1. Place two sling legs on apex fitting number 1. Position apex fitting number 1 on the tongue.

2. Loop the chain end of the left and right sling legs through their respective lift provisions located on the tongue end of the roller. Place the correct link from Table 8-12 in the grab hook.

3. Place two sling legs on apex fitting number 2. Position apex fitting number 2 behind the roller.

4. Loop the chain end of the left and right sling legs through their respective lift provisions located on the rear end of the roller. Place the correct link from Table 8-12 in the grab hook.

5. Raise the apex fittings above the load. Cluster and tie or tape (breakaway technique) the sling legs in each sling set together to prevent entanglement during hookup and lift-off.

Figure 8-12. Roller, Towed, Vibrating

8-14. Roller, Compactor, Vibrator

a. Applicability. The following item in Table 8-13 is certified for the helicopter(s) listed in the following table by the US Army Soldier Systems Center:

Table 8-13. Roller, Compactor, Vibrator

NOMENCLATURE	MAX WEIGHT (POUNDS)	SLING SET	LINK COUNT FRONT/ REAR	TYPE OF AIRCRAFT	RECOMMENDED AIRSPEED (KNOTS)
Roller, Compactor, Vibrator	24,340	40K	41/3	CH-53	80

b. Materials. The following materials are required to rig this load:

(1) Sling set (40,000-pound capacity) with one additional apex fitting .

(a) Chain length, part number 607050, from a 40,000-pound capacity sling set (2 each).

(b) Coupling link, part number 577-0815, from a 40,000-pound sling set (2 each).

(2) Tape, adhesive, pressure-sensitive, 2-inch wide roll.

(3) Cord, nylon, Type III, 550-pound breaking strength.

(4) Webbing, cotton, 1/4-inch, 80-pound breaking strength.

(5) Felt sheet, cattle hair, Type IV, 1/2-inch or suitable padding

(6) Strap, cargo, tiedown, CGU-1/B (as required).

c. Personnel. Two persons can prepare and rig this load in 30 minutes.

d. Procedures. The following procedures apply to this load:

(1) Preparation. Prepare the load using the following steps:

(a) Ensure the roller is secured in the down position according to the instructions in the operator's manual. Secure all hatches and door panels with CGU-1/B tiedown straps.

(b) Tape the air filter intake and the exhaust pipe opening. Tape the windows, lights, and reflectors.

(c) Engage the hand brake and place the transmission in neutral.

(d) Ensure the fuel tank is not over 3/4 full. Inspect fuel tank cap, oil filler cap, and battery caps for proper installation.

(2) Rigging. Rig the load according to the steps in Figure 8-13.

(3) Hookup. Two hookup teams are required for this load. The static discharge person discharges the static electricity. The forward hookup person stands on the forward end of the compactor and places apex fitting 1 onto the forward cargo hook. The aft hookup person stands on the rear of the compactor and places apex fitting 2 onto the aft cargo hook. The hookup teams then carefully dismount the load and remain close to the load as the helicopter removes slack from the sling legs. When successful hookup is assured, the hookup teams quickly exit the area underneath the helicopter to the designated rendezvous point.

(4) Derigging. Derigging is the reverse of the preparation and rigging procedures in steps d (1) and d (2).

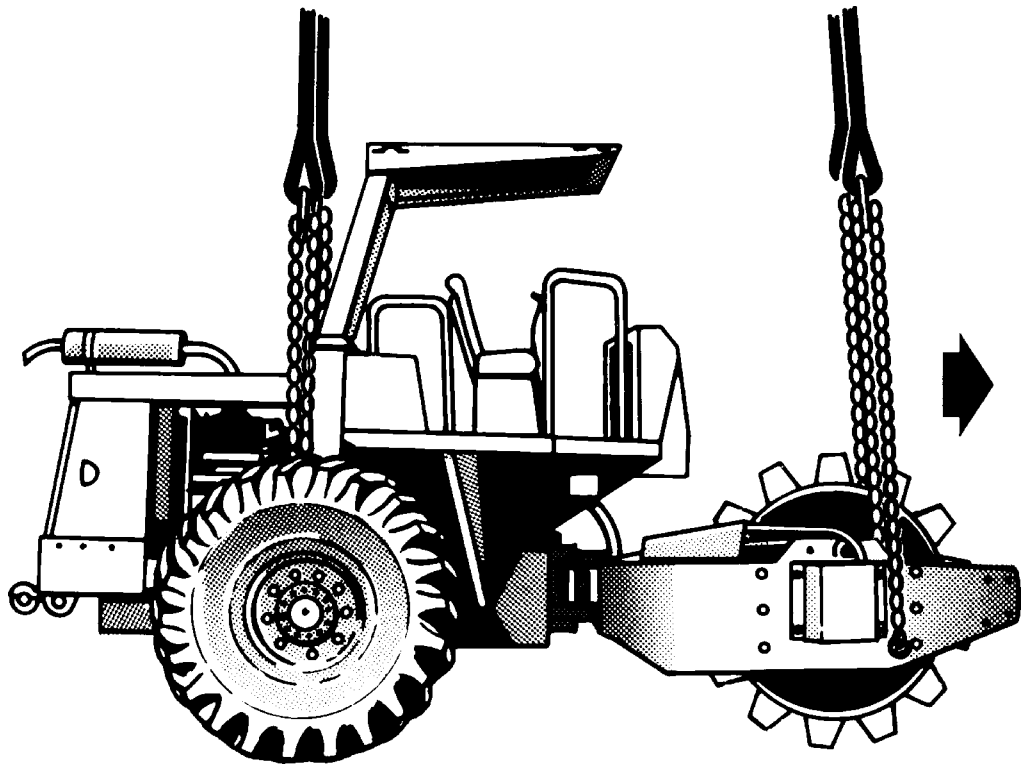

RIGGING STEPS

1. Place two sling legs on apex fitting number 1. Attach an additional chain length to each sling leg chain with the coupling link. Position apex fitting number 1 on top of the front of the compactor.

2. Loop the chain end of the left and right sling legs through their respective lift provisions located at the bottom of the roller supporting arm. Place the correct link from Table 8-13 in the grab hook. Secure the excess chain with tape or Type III nylon cord.

3. Place two sling legs on apex fitting number 2. Position apex fitting number 2 on top of the rear of the compactor.

4. Loop the chain end of the left and right sling legs through their respective lift provisions located between the engine and the rear tire. Place the correct link from Table 8-13 in the grab hook.

5. Pad the sling legs where the legs rub against the engine housing. Secure the padding with tape or Type III nylon cord.

6. Raise the apex fittings above the load. Cluster and tie or tape (breakaway technique) the sling legs in each sling set together to prevent entanglement during hookup and lift-off.

Figure 8-13. Roller, Compactor, Vibrator

8-15. Towed Rollers

a. Applicability. The following items in Table 8-14 are certified for the helicopter(s) listed in the following table by the US Army Soldier Systems Center:

Table 8-14. Towed Rollers

NOMENCLATURE	MAX WEIGHT (POUNDS)	SLING SET	LINK COUNT FRONT/ REAR	TYPE OF AIRCRAFT	RECOMMENDED AIRSPEED (KNOTS)
Roller, Towed, RO3402	4,600	10K	3/30	CH-47	120
Roller, Hercules, PT-11	3,520	10K	3/3	CH-47	105

b. Materials. The following materials are required to rig this load:

(1) Sling set (10,000-pound capacity) with one additional apex fitting.

(2) Tape, adhesive, pressure-sensitive, 2-inch wide roll.

(3) Cord, nylon, Type III, 550-pound breaking strength.

(4) Webbing, cotton, 1/4-inch, 80-pound breaking strength.

(5) Strap, cargo, tiedown. CGU-1/B (2 each).

c. Personnel. Two persons can prepare and rig this load in 10 minutes.

d. Procedures. The following procedures apply to this load:

(1) Preparation. Prepare the load using the following steps:

(a) Secure the drain plugs with tape.

(b) Raise the tongue and secure with the CGU-1/B tiedown straps.

(2) Rigging. Rig the load according to the steps in Figure 8-14.

(3) Hookup. Two hookup teams are required for this load. The static discharge person discharges the static electricity. The forward hookup person stands on the forward end of the roller and places apex fitting 2 onto the forward cargo hook. The aft hookup person stands on the rear of the roller and places apex fitting 1 onto the aft cargo hook. The hookup teams then carefully dismount the load and remain close to the load as the helicopter removes slack from the sling legs. When successful hookup is assured, the hookup teams quickly exit the area underneath the helicopter to the designated rendezvous point.

(4) Derigging. Derigging is the reverse of the preparation and rigging procedures in steps d (1) and d (2).

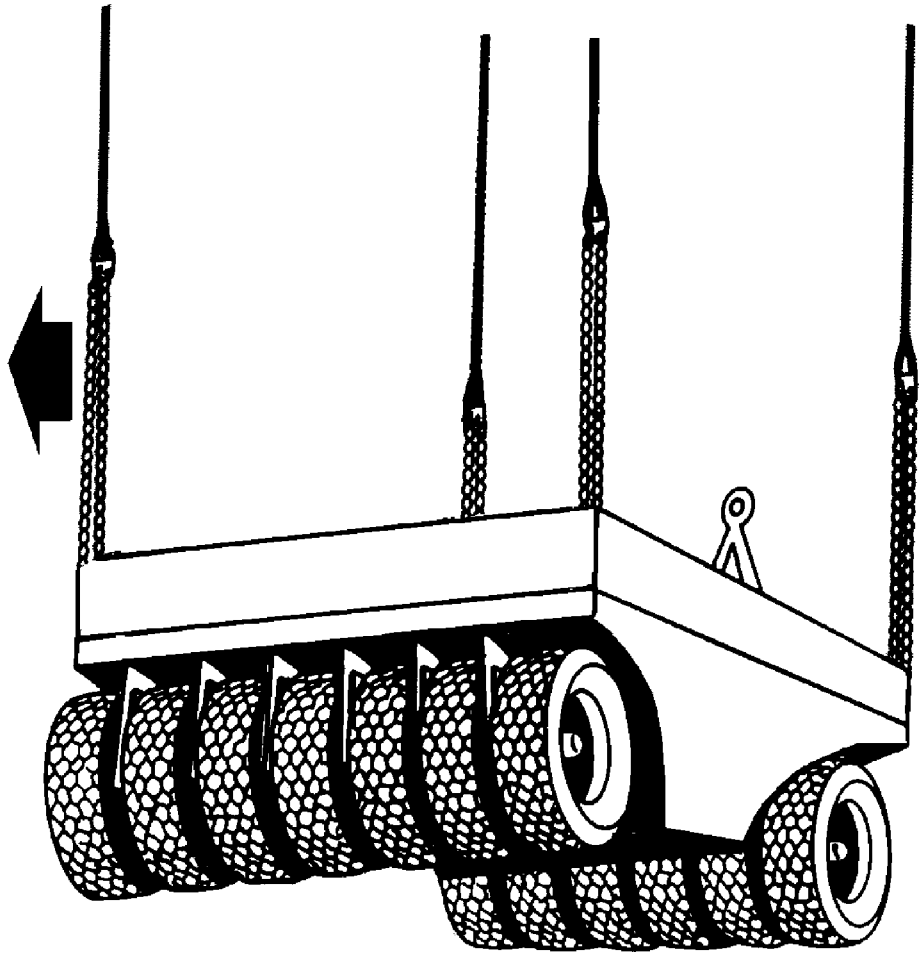

RIGGING STEPS

1. Place two sling legs on apex fitting number 1. Position apex fitting number 1 on top of the roller.

2. Loop the chain end of the left and right sling legs through their respective lift provisions located on the front corner of the roller. Place the correct link from Table 8-14 in the grab hook.

3. Place two sling legs on apex fitting number 2. Position apex fitting number 2 on top of the roller.

4. Loop the chain end of the left and right sling legs through their respective lift provisions located on the rear corners of the roller. Place the correct link from Table 8-14 in the grab hook.

5. Raise the apex fittings above the load. Cluster and tie or tape (breakaway technique) the sling legs in each sling set together to prevent entanglement during hookup and lift-off.

Figure 8-14. Towed Rollers

8-16. Mine Clearing Line Charge Mounted on M353 Trailer

a. Applicability. The following item in Table 8-15 is certified for the helicopter(s) listed in the following table by the US Army Soldier Systems Center:

Table 8-15. Mine Clearing Line Charge Mounted on M353 Trailer

NOMENCLATURE	MAX WEIGHT (POUNDS)	SLING SET	LINK COUNT FRONT/ REAR	TYPE OF AIRCRAFT	RECOMMENDED AIRSPEED (KNOTS)
Mk155 Launcher with M68A2 Demolition Charge and Mk22 Rocket Motor	6,372	10K	3/3	CH-47	140

b. Materials. The following materials are required to rig this load:

(1) Sling set (10,000-pound capacity) with one additional apex fitting.

(2) Tape, adhesive, pressure-sensitive, 2-inch wide roll.

(3) Cord, nylon, Type III, 550-pound breaking strength.

(4) Webbing, cotton, 1/4-inch, 80-pound breaking strength.

(5) Strap, cargo, tiedown, CGU-1/B (4 each).

c. Personnel. Two persons can prepare and rig this load in 10 minutes.

d. Procedures. The following procedures apply to this load:

(1) Preparation. Prepare the load using the following steps:

(a) Ensure all components are securely attached together.

(b) Ensure the storage box lid is closed and secure. Secure safety chains, hoses, and any other loose items with tape or Type III nylon cord.

(c) Engage the parking brake.

NOTE: The rocket motor cannot be safely secured to the load in this configuration; therefore, the rocket motor box must be kept separate and loaded internally into the helicopter.

(2) Rigging. Rig the load according to the steps in Figure 8-15.

(3) Hookup. Two hookup teams are required for this load. The static discharge person discharges the static electricity. The forward hookup person stands on the trailer chassis and places apex fitting 2 onto the forward cargo hook. The aft hookup person stands on the trailer chassis and places apex fitting 1 (lunette end) onto the aft cargo hook. The hookup teams then carefully dismount the load and remain close to the load as the helicopter removes slack from the sling legs. When successful hookup is assured, the hookup teams quickly exit the area underneath the helicopter to the designated rendezvous point.

(4) Derigging. Derigging is the reverse of the preparation and rigging procedures in steps d (1) and d (2).

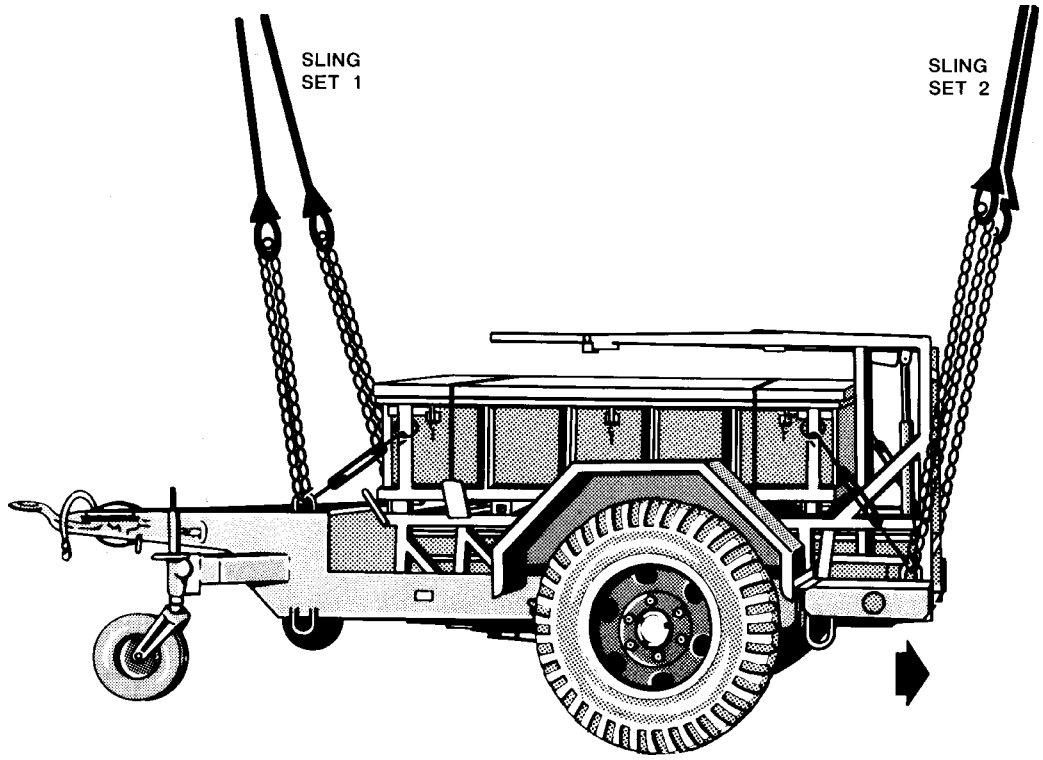

RIGGING STEPS

1. Place two sling legs on apex fitting number 1. Position apex fitting number 1 on the trailer tongue.

2. Loop the chain end of the left and right sling legs through their respective lift provisions located aft of the trailer leveling wheels. Place the correct link from Table 8-15 in the grab hook.

3. Place two sling legs on apex fitting number 2. Position apex fitting number 2 on top of the aft end of the launcher.

4. Loop the chain end of the left and right sling legs through their respective lift provisions located aft of the trailer wheels by the bumper. Place the correct link from Table 8-15 in the grab hook.

5. Pull and tie or tape (breakaway technique) the sling legs to the launch rail.

6. Raise the apex fittings above the load. Cluster and tie or tape (breakaway technique) the sling legs in each sling set together to prevent entanglement during hookup and lift-off.

Figure 8-15. Mine Clearing Line Charge Mounted on M353 Trailer

8-17. Mine Clearing Line Charge Mounted on M200A1 Trailer

a. Applicability. The following item in Table 8-16 is certified for the helicopter(s) listed in the following table by the US Army Soldier Systems Center:

Table 8-16. Mine Clearing Line Charge Mounted on M200A1 Trailer

NOMENCLATURE	MAX WEIGHT (POUNDS)	SLING SET	LINK COUNT FRONT/ REAR	TYPE OF AIRCRAFT	RECOMMENDED AIRSPEED (KNOTS)
Mk155 Launcher with M68A2 Demolition Charge and Mk22 Rocket Motor	6,002	10K	10/3	CH-47	120

b. Materials. The following materials are required to rig this load:

(1) Sling set (10,000-pound capacity) with one additional apex fitting.

(2) Tape, adhesive, pressure-sensitive, 2-inch wide roll.

(3) Cord, nylon, Type III, 550-pound breaking strength.

(4) Webbing, cotton, 1/4-inch, 80-pound breaking strength.

(5) Strap, cargo, tiedown, CGU-1/B (4 each).

c. Personnel. Two persons can prepare and rig this load in 20 minutes.

d. Procedures. The following procedures apply to this load:

(1) Preparation. Prepare the load using the following steps:

(a) Ensure all components are securely attached together.

(b) Ensure the storage box lid is closed and secure. Secure safety chains, hoses, and any other loose items with tape or Type III nylon cord.

(c) Engage the parking brake.

(d) Ensure the launch is in the collapsed or storage position.

NOTE: The rocket motor cannot be safely secured to the load in this configuration; therefore, the rocket motor box must be kept separate and loaded internally into the helicopter.

(2) Rigging. Rig the load according to the steps in Figure 8-16.

(3) Hookup. Two hookup teams are required for this load. The static discharge person discharges the static electricity. The forward hookup person stands on the demolition box and places apex fitting 2 onto the forward cargo hook. The aft hookup person stands on the demolition box (lunette end) and places apex fitting 1 onto the aft cargo hook. The hookup teams then carefully dismount the load and remain close to the load as the helicopter removes slack from the sling legs. When successful hookup is assured, the hookup teams quickly exit the area underneath the helicopter to the designated rendezvous point.

(4) Derigging. Derigging is the reverse of the preparation and rigging procedures in steps d (1) and d (2).

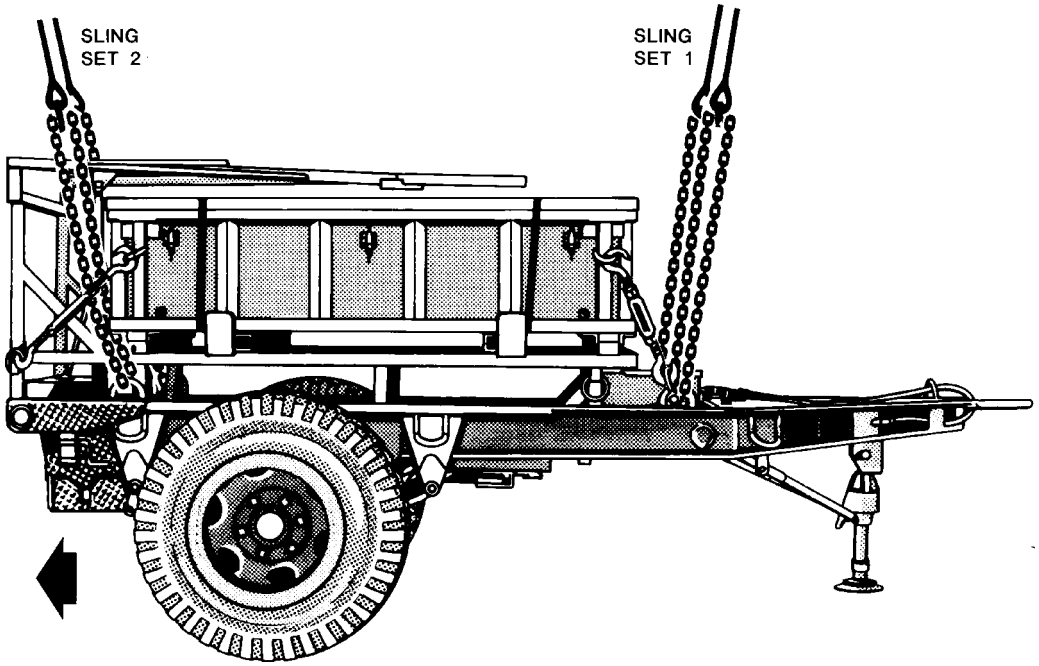

RIGGING STEPS

1. Place two sling legs on apex fitting number 1. Position apex fitting number 1 on top of the demolition charge container on the lunette end.

2. Loop the chain end of the left and right sling legs through their respective lift provisions located on the trailer chassis frame aft of the lunette. Place the correct link from Table 8-16 in the grab hook.

3. Place two sling legs on apex fitting number 2. Position apex fitting number 2 on top of the aft end of the launcher.

4. Loop the chain end of the left and right sling legs through their respective lift provisions located on the trailer chassis below the aft end of the demolition charge container. Place the correct link from Table 8-16 in the grab hook. Secure the excess chain with tape or Type III nylon cord.

5. Raise the apex fittings above the load. Cluster and tie or tape (breakaway technique) the sling legs in each sling set together to prevent entanglement during hookup and lift-off.

Figure 8-16. Mine Clearing Line Charge Mounted on M200A1 Trailer

8-18. LRT-110, 7 1/2-Ton Crane

a. Applicability. The following item in Table 8-17 is certified for the helicopter(s) listed in the following table by the US Army Soldier Systems Center:

Table 8-17. LRT-110, 7 1/2-Ton Crane

NOMENCLATURE	MAX WEIGHT (POUNDS)	SLING SET	LINK COUNT FRONT/ REAR	TYPE OF AIRCRAFT	RECOMMENDED AIRSPEED (KNOTS)
7 1/2-Ton Crane, Type II, LRT-110	24,230	25K	3/3	CH-47	120

b. Materials. The following materials are required to rig this load:

(1) Sling set (25,000-pound capacity) with one additional apex fitting.

(2) Tape, adhesive, pressure-sensitive, 2-inch wide roll.

(3) Cord, nylon, Type III, 550-pound breaking strength.

(4) Webbing, cotton, 1/4-inch, 80-pound breaking strength.

(5) Strap, cargo, tiedown, CGU-1/B (1 each).

(6) Felt sheet, cattle hair, Type IV, 1/2-inch or suitable padding.

(7) Webbing, tubular, nylon, 1/2-inch, 1,000-pound breaking strength.

c. Personnel. Two persons can prepare and rig this load in 20 minutes.

d. Procedures. The following procedures apply to this load:

(1) Preparation. Prepare the load using the following steps:

(a) Fold the side mirrors in toward the cab and secure with tape or Type III nylon cord. Tape the windshield wipers to the windshield.

(b) Ensure the front wheels are straight and secure the steering wheel with Type III nylon cord.

(c) Engage the hand brake.

(d) Secure the doors, toolbox cover, and all loose equipment with tape or Type III nylon cord.

(e) Secure the hook-block assembly to the end of the boom mast with a CGU-1/B tiedown strap.

(f) Secure the boom light power cable with tape or Type III nylon cord.

(g) Insert wooden cable wedges at the drum to prevent the cable from unspooling if the cable becomes slack.

(h) Secure the cable wedges with 1/2-inch tubular nylon.

(i) Ensure the fuel tank is not over 3/4 full. Inspect fuel tank cap, oil filler cap, and battery caps for proper installation.

(2) Rigging. Rig the load according to the steps in Figure 8-17.

(3) Hookup. Two hookup teams are required for this load. The static discharge person discharges the static electricity. The forward hookup person stands on the engine deck and places apex fitting 2 onto the forward cargo hook. The aft hookup person stands on the cab top and places apex fitting 1 onto the aft cargo hook. The hookup teams then carefully dismount the load and remain close to the load as the helicopter removes slack from the sling legs. When successful hookup is assured,

the hookup teams quickly exit the area underneath the helicopter to the designated rendezvous point.

(4) Derigging. Derigging is the reverse of the preparation and rigging procedures in steps d (1) and d (2).

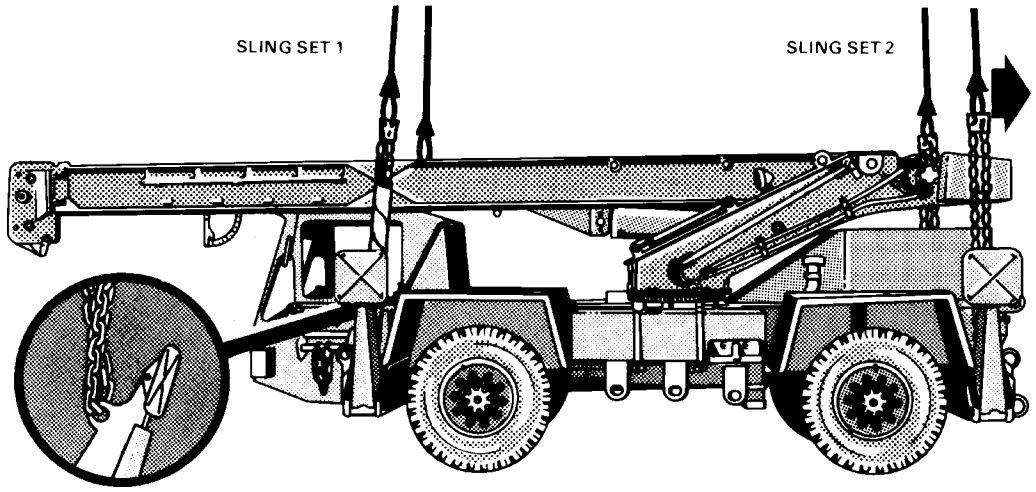

RIGGING STEPS

1. Place two sling legs on apex fitting number 1. Position apex fitting number 1 on top of the boom directly above the front wheels.

2. Loop the chain end of the left and right sling legs through their respective lift provisions located on the inboard side of the front outriggers. Place the correct link from Table 8-17 in the grab hook.

3. Pad the slings where they contact the cab and secure the padding with tape or Type III nylon cord.

4. Place two sling legs on apex fitting number 2. Position apex fitting number 2 on top of the boom directly above the rear wheels.

5. Loop the chain end of the left and right sling legs through their respective lift provisions located on the inboard side of the rear outriggers. Place the correct link from Table 8-17 in the grab hook.

6. Raise the apex fittings above the load. Cluster and tie or tape (breakaway technique) the sling legs in each sling set together to prevent entanglement during hookup and lift-off.

Figure 8-17. LRT-110, 7 1/2-Ton Crane

8-19. LRT-110, 7 1/2-Ton Crane (Boom)

a. Applicability. The following item in Table 8-18 is certified for the helicopter(s) listed in the following table by the US Army Soldier Systems Center:

Table 8-18. LRT-110, 7 1/2-Ton Crane (Boom)

NOMENCLATURE	MAX WEIGHT (POUNDS)	SLING SET	LINK COUNT FRONT/ REAR	TYPE OF AIRCRAFT	RECOMMENDED AIRSPEED (KNOTS)
Boom Section, 7 1/2-Ton Crane, Type II, LRT-110	8,600	10K	3/3	CH-47	140

b. Materials. The following materials are required to rig this load:

(1) Sling set (10,000-pound capacity) with one additional apex fitting.

(2) Tape, adhesive, pressure-sensitive, 2-inch wide roll.

(3) Cord, nylon, Type III, 550-pound breaking strength.

(4) Webbing, cotton, 1/4-inch, 80-pound breaking strength.

(5) Strap, cargo, tiedown, CGU-1/B (1 each).

(6) Webbing, tubular, nylon, 1/2-inch, 1,000-pound breaking strength.

c. Personnel. Two persons can prepare and rig this load in 20 minutes.

d. Procedures. The following procedures apply to this load:

(1) Preparation. Prepare the load using the following steps:

(a) Sectionalize the crane according to the instructions in the operator's manual.

(b) Secure the hook-block assembly to the end of the boom mast with a CGU-1/B tiedown strap.

(c) Secure the boom light power cable with tape or Type III nylon cord.

(d) Insert wooden cable wedges at the drum to prevent the cable from unspooling if the cable becomes slack.

(e) Secure the cable wedges with 1/2-inch tubular nylon.

(f) Secure the boom hydraulic hoses with tape or Type III nylon cord. Ensure the hoses are clear of the boom base.

(2) Rigging. Rig the load according to the steps in Figure 8-18.

(3) Hookup. Two hookup teams are required for this load. The static discharge person discharges the static electricity. The forward hookup person stands beside the rear (counterweight) end and places apex fitting 1 onto the forward cargo hook. The aft hookup person stands beside the middle of the boom and places apex fitting 2 onto the aft cargo hook. The hookup teams then carefully dismount the load and remain close to the load as the helicopter removes slack from the sling legs. When successful hookup is assured, the hookup teams quickly exit the area underneath the helicopter to the designated rendezvous point.

(4) Derigging. Derigging is the reverse of the preparation and rigging procedures in steps d (1) and d (2).

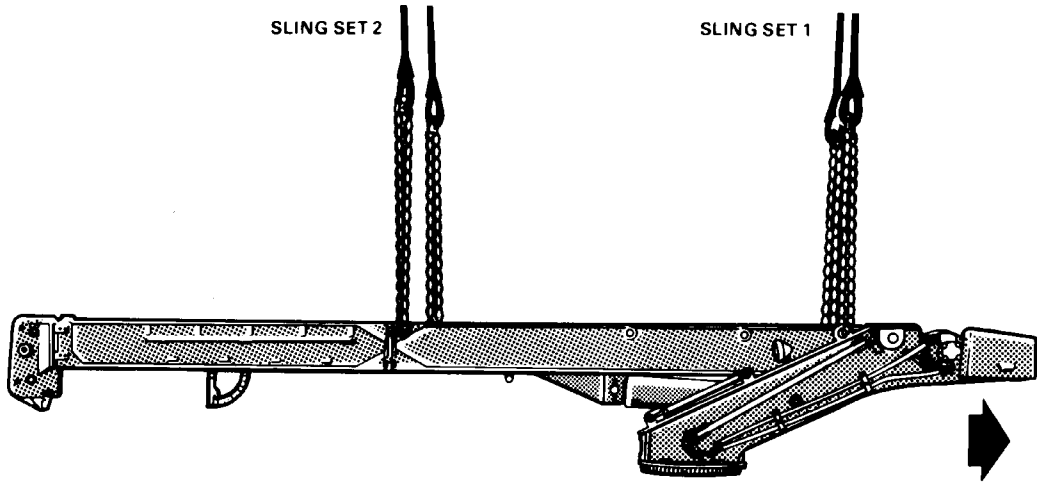

RIGGING STEPS

1. Place two sling legs on apex fitting number 1. Position apex fitting number 1 on top of the boom counterweight.

2. Loop the chain end of the left and right sling legs through their respective lift provisions located on top of boom left and right support arms. Place the correct link from Table 8-18 in the grab hook.

3. Place two sling legs on apex fitting number 2. Position apex fitting number 2 on top of the middle of the boom by the lift provisions.

4. Loop the chain end of the left and right sling legs through their respective lift provisions located on sides of the boom. Place the correct link from Table 8-18 in the grab hook.

5. Raise the apex fittings above the load. Cluster and tie or tape (breakaway technique) the sling legs in each sling set together to prevent entanglement during hookup and lift-off.

Figure 8-18. LRT-110, 7 1/2-Ton Crane (Boom)

8-20. LRT-110, 7 1/2-Ton Crane (Power Unit)

a. Applicability. The following item in Table 8-19 is certified for the helicopter(s) listed in the following table by the US Army Soldier Systems Center:

Table 8-19. LRT-110, 7 1/2-Ton Crane (Power Unit)

NOMENCLATURE	MAX WEIGHT (POUNDS)	SLING SET	LINK COUNT FRONT/ REAR	TYPE OF AIRCRAFT	RECOMMENDED AIRSPEED (KNOTS)
Power Unit, 7 1/2-Ton Crane, Type II, LRT-110	15,600	25K	3/3	CH-47	140

b. Materials. The following materials are required to rig this load:

(1) Sling set (25,000-pound capacity) with one additional apex fitting.

(2) Tape, adhesive, pressure-sensitive, 2-inch wide roll.

(3) Cord, nylon, Type III, 550-pound breaking strength.

(4) Webbing, cotton, 1/4-inch, 80-pound breaking strength.

(5) Strap, cargo, tiedown, CGU-1/B (1 each).

(6) Webbing, tubular, nylon, 1/2-inch, 1,000-pound breaking strength.

(7) Felt sheet, cattle hair, Type IV, 1/2-inch or suitable padding.

c. Personnel. Two persons can prepare and rig this load in 20 minutes.

d. Procedures. The following procedures apply to this load:

(1) Preparation. Prepare the load using the following steps:

(a) Sectionalize the crane according to the instructions in the operator's manual.

(b) Fold the side mirrors in toward the cab and secure with tape or Type III nylon cord. Tape the windshield wipers to the windshield.

(c) Ensure the front wheels are straight and secure the steering wheel with Type III nylon cord. Engage the hand brake.

(d) Ensure the fuel tank is not over 3/4 full. Inspect fuel tank cap, oil filler cap, and battery caps for proper installation.

(e) Secure the doors, toolbox cover, and all loose equipment with tape or Type III nylon cord.

(2) Rigging. Rig the load according to the steps in Figure 8-19.

(3) Hookup. Two hookup teams are required for this load. The static discharge person discharges the static electricity. The forward hookup person stands on the engine deck and places apex fitting 2 onto the forward cargo hook. The aft hookup person stands on the cab top and places apex fitting 1 onto the aft cargo hook. The hookup teams then carefully dismount the load and remain close to the load as the helicopter removes slack from the sling legs. When successful hookup is assured, the hookup teams quickly exit the area underneath the helicopter to the designated rendezvous point.

(4) Derigging. Derigging is the reverse of the preparation and rigging procedures in steps d (1) and d (2).

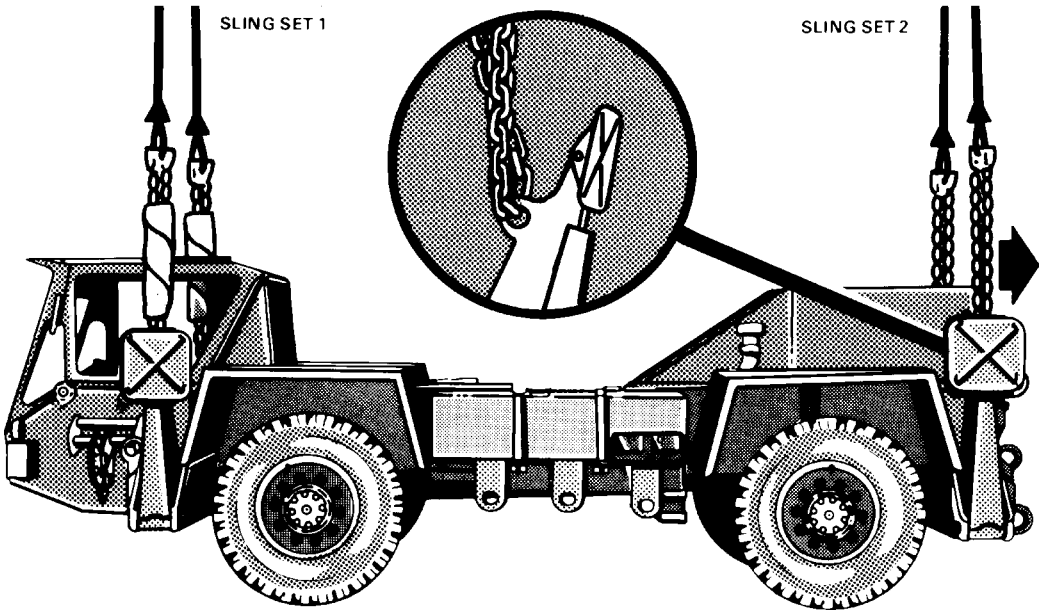

RIGGING STEPS

1. Place two sling legs on apex fitting number 1. Position apex fitting number 1 on top of the boom directly above the front wheels.

2. Loop the chain end of the left and right sling legs through their respective lift provisions located on the inboard side of the front outriggers. Place the correct link from Table 8-19 in the grab hook.

3. Pad the slings where they contact the cab and secure the padding with tape or Type III nylon cord.

4. Place two sling legs on apex fitting number 2. Position apex fitting number 2 on top of the boom directly above the rear wheels.

5. Loop the chain end of the left and right sling legs through their respective lift provisions located on the inboard side of the rear outriggers. Place the correct link from Table 8-19 in the grab hook.

6. Raise the apex fittings above the load. Cluster and tie or tape (breakaway technique) the sling legs in each sling

Figure 8-19. LRT-110, 7 1/2-Ton Crane (Power Unit)

8-21. SP-7 Wheel-Mounted Crane

a. Applicability. The following item in Table 8-20 is certified for the helicopter(s) listed in the following table by the US Army Soldier Systems Center:

Table 8-20. SP-7 Wheel-Mounted Crane

NOMENCLATURE	MAX WEIGHT (POUNDS)	SLING SET	LINK COUNT FRONT/ REAR	TYPE OF AIRCRAFT	RECOMMENDED AIRSPEED (KNOTS)
SP-7 Wheel-Mounted Crane (Pettibone)	27,640	40K	3/11	CH-53	100

b. Materials. The following materials are required to rig this load:

(1) Sling set (40,000-pound capacity) with one additional apex fitting.

(2) Tape, adhesive, pressure-sensitive, 2-inch wide roll.

(3) Cord, nylon, Type III, 550-pound breaking strength.

(4) Webbing, cotton, 1/4-inch, 80-pound breaking strength.

(5) Strap, cargo, tiedown, CGU-1/B (as required).

c. Personnel. Two persons can prepare and rig this load in 30 minutes.

d. Procedures. The following procedures apply to this load:

(1) Preparation. Prepare the load using the following steps:

(a) Ensure the boom is secured in the down position according to the operator's manual.

(b) Secure all hatches and doors with tiedown straps or Type III nylon cord.

(c) Ensure the front wheels are pointed straight ahead. Tie down the steering wheel using Type III nylon cord.

(d) Ensure the fuel tank is not over 3/4 full. Inspect fuel tank cap, oil filler cap, and battery caps for proper installation.

(e) Engage the hand brake and place the transmission in neutral.

(f) Tape all windows, lights, and reflectors. Tape the exhaust opening.

(2) Rigging. Rig the load according to the steps in Figure 8-20.

(3) Hookup. Two hookup teams are required for this load. The static discharge person discharges the static electricity. The forward hookup person stands on the front of the crane and places apex fitting 1 onto the forward cargo hook. The aft hookup person stands on the rear of the crane and places apex fitting 2 onto the aft cargo hook. The hookup teams then carefully dismount the load and remain close to the load as the helicopter removes slack from the sling legs. When successful hookup is assured, the hookup teams quickly exit the area underneath the helicopter to the designated rendezvous point.

(4) Derigging. Derigging is the reverse of the preparation and rigging procedures in steps d (1) and d (2).

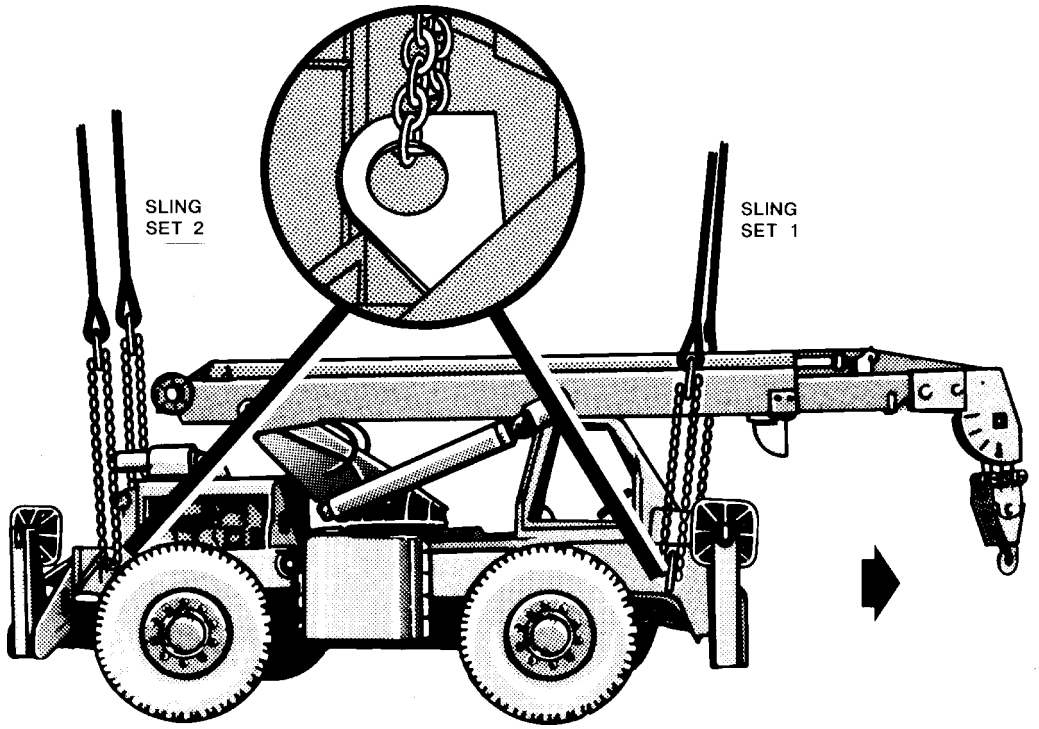

RIGGING STEPS

1. Place two sling legs on apex fitting number 1. Position apex fitting number 1 on top of the front of the crane.

2. Loop the chain end of the left and right sling legs through their respective lift provisions located below the front corners of the windshield. Place the correct link from Table 8-20 in the grab hook.

3. Place two sling legs on apex fitting number 2. Position apex fitting number 2 on top of the aft end of the crane.

4. Loop the chain end of the left and right sling legs through their respective lift provisions located near the crane rear end. Place the correct link from Table 8-20 in the grab hook.

5. Raise the apex fittings above the load. Cluster and tie or tape (breakaway technique) the sling legs in each sling set together to prevent entanglement during hookup and lift-off.

Figure 8-20. SP-7 Wheel-Mounted Crane

8-22. Truck, Forklift, MC-4000

a. Applicability. The following item in Table 8-21 is certified for the helicopter(s) listed in the following table by the US Army Soldier Systems Center:

Table 8-21. Truck, Forklift, MC-4000

NOMENCLATURE	MAX WEIGHT (POUNDS)	SLING SET	LINK COUNT FRONT/ REAR	TYPE OF AIRCRAFT	RECOMMENDED AIRSPEED (KNOTS)
Truck, Forklift, Rough Terrain, MC-4000, TAMCN B2565	8,600	15K	3/25	CH-53	120

b. Materials. The following materials are required to rig this load:

(1) Sling set (15,000-pound capacity) (2 each).

(2) Tape, adhesive, pressure-sensitive, 2-inch wide roll.

(3) Cord, nylon, Type III, 550-pound breaking strength.

(4) Webbing, cotton, 1/4-inch, 80-pound breaking strength.

(5) Strap, cargo, tiedown, CGU-1/B (as required).

c. Personnel. Two persons can prepare and rig this load in 10 minutes.

d. Procedures. The following procedures apply to this load:

(1) Preparation. Prepare the load using the following steps:

(a) Engage the parking brake and place the transmission in neutral.

(b) Secure the seat cushion with Type III nylon cord.

(c) Ensure the front wheels are pointed straight ahead. Tie down the steering wheel using Type III nylon cord.

(d) Ensure the fuel tank is not over 3/4 full. Inspect fuel tank cap, oil filler cap, and battery caps for proper installation.

(e) Insert the articulating lock pin to keep the forklift front and rear sections from twisting in flight.

(f) Raise the fork tines approximately 1 foot above the ground. Lift the ends of the fork tines by hand to point upward. Secure the fork tines to the lift cylinder frame using the tiedown strap.

(2) Rigging. Rig the load according to the steps in Figure 8-21.

NOTE: When using the 15,000-pound capacity multileg sling set, tie or tape the inner sling legs to the outer sling legs.

(3) Hookup. Two hookup teams are required for this load. The static discharge person discharges the static electricity. The forward hookup person kneels on top of the ROPS and places apex fitting 1 onto the forward cargo hook. The aft hookup person stands on the engine deck and places apex fitting 2 onto the aft cargo hook. The hookup teams then carefully dismount the load and remain close to the load as the helicopter removes slack from the sling legs. When successful hookup is assured, the hookup teams quickly exit the area underneath the helicopter to the designated rendezvous point.

(4) Derigging. Derigging is the reverse of the preparation and rigging procedures in steps d (1) and d (2).

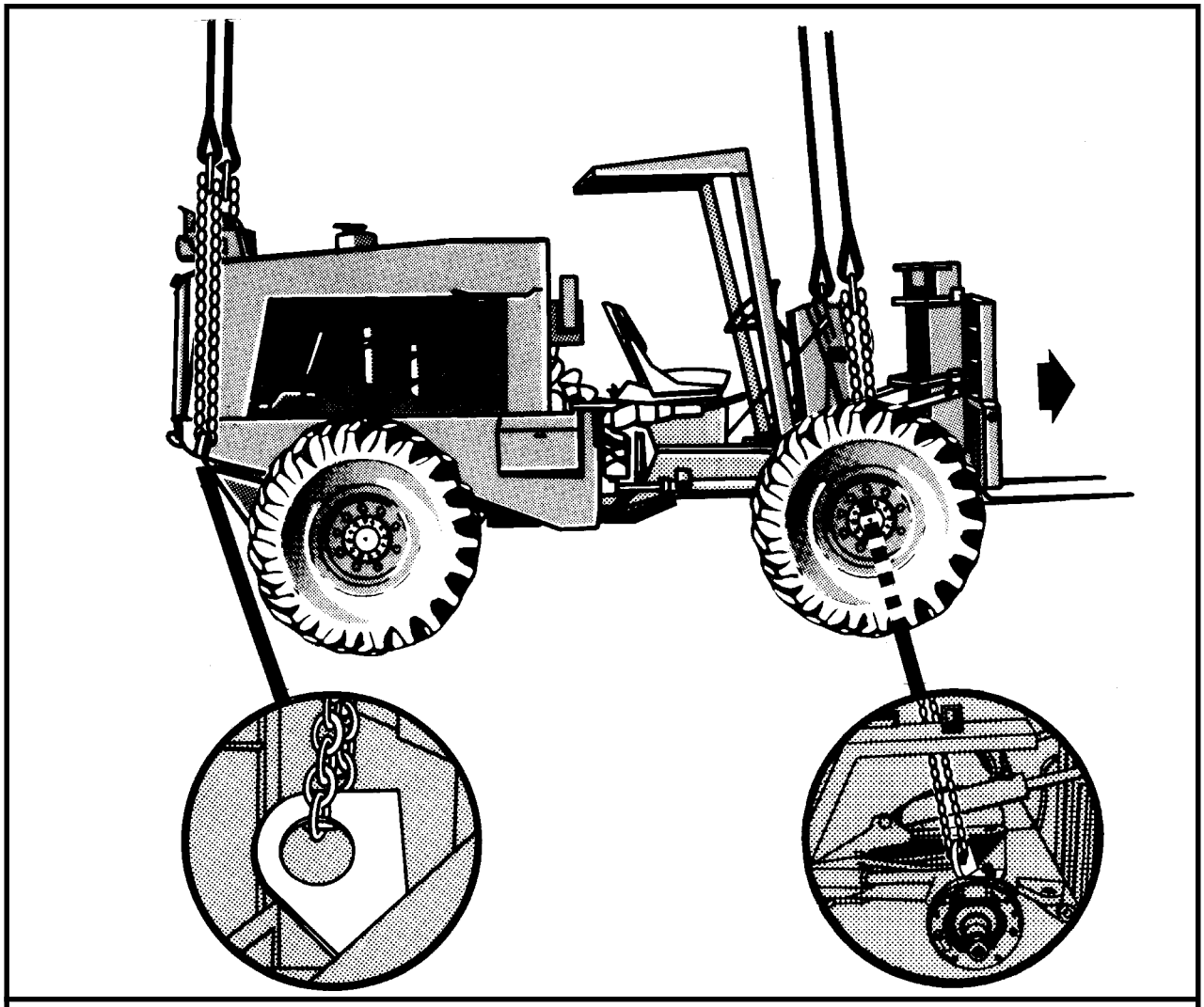

RIGGING STEPS

1. Position sling set number 1 on top of the ROPS.

2. Loop the chain end of the left and right sling legs through their respective lift provisions located between the front tire and the chassis. Place the correct link from Table 8-21 in the grab hook.

3. Position sling set number 2 on top of the engine deck.

4. Loop the chain end of the left and right sling legs through their respective lift provisions located on the rear of the forklift. Place the correct link from Table 8-21 in the grab hook. Secure the excess chain with tape or Type III nylon cord.

5. Raise the apex fittings above the load. Cluster and tie or tape (breakaway technique) the sling legs in each sling set together to prevent entanglement during hookup and lift-off.

Figure 8-21. Truck, Forklift, MC-4000

8-23. Truck, Forklift, RT-4000 (USMC)

a. Applicability. The following item in Table 8-22 is certified for the helicopter(s) listed in the following table by the US Army Soldier Systems Center:

Table 8-22. Truck, Forklift, RT-4000

NOMENCLATURE	MAX WEIGHT (POUNDS)	SLING SET	LINK COUNT FRONT/ REAR	TYPE OF AIRCRAFT	RECOMMENDED AIRSPEED (KNOTS)
Truck, Forklift, RT-4000	10,860	15K	3/40	CH-53	120

b. Materials. The following materials are required to rig this load:

(1) Sling set (15,000-pound capacity) (2 each).

(2) Tape, adhesive, pressure-sensitive, 2-inch wide roll.

(3) Cord, nylon, Type III, 550-pound breaking strength.

(4) Webbing, cotton, 1/4-inch, 80-pound breaking strength.

(5) Strap, cargo, tiedown, CGU-1/B (as required).

c. Personnel. Two persons can prepare and rig this load in 10 minutes.

d. Procedures. The following procedures apply to this load:

(1) Preparation. Prepare the load using the following steps:

(a) Engage the hand brake and place the transmission in neutral.

(b) Raise the fork tines approximately 1 foot above the ground. Lift the ends of the fork tines by hand to point upward. Secure the fork tines to the lift cylinder frame using the tiedown strap.

(c) Ensure the front wheels are pointed straight ahead. Tie down the steering wheel using Type III nylon cord.

(d) Ensure the fuel tank is not over 3/4 full. Inspect fuel tank cap, oil filler cap, and battery caps for proper installation.

(e) Tape the opening in the exhaust pipe.

(2) Rigging. Rig the load according to the steps in Figure 8-22.

NOTE: When using the 15,000-pound capacity multileg sling set, tie or tape the inner sling legs to the outer sling legs.

(3) Hookup. Two hookup teams are required for this load. The static discharge person discharges the static electricity. The forward hookup person stands on top of the FOPS and places apex fitting 1 onto the forward cargo hook. The aft hookup person stands on the engine deck and places apex fitting 2 onto the aft cargo hook. The hookup teams then carefully dismount the load and remain close to the load as the helicopter removes slack from the sling legs. When successful hookup is assured, the hookup teams quickly exit the area underneath the helicopter to the designated rendezvous point.

(4) Derigging. Derigging is the reverse of the preparation and rigging procedures in steps d (1) and d (2).

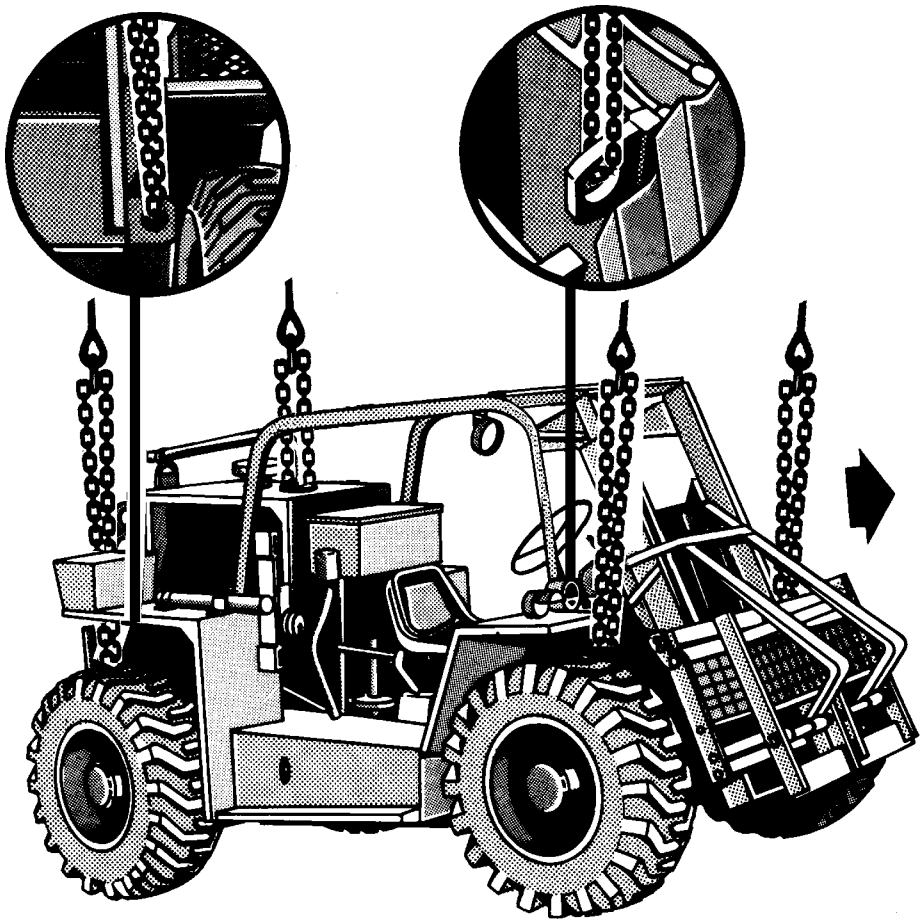

RIGGING STEPS

1. Position sling set number 1 on top of the FOPS.

2. Loop the chain end of the left and right sling legs through their respective lift provisions (not the tiedown provisions) located directly above the forward axle housing between the front tire and the hydraulic cylinder. Place the correct link from Table 8-22 in the grab hook.

3. Position sling set number 2 on top of the engine deck.

4. Loop the chain end of the left and right sling legs through their respective lift provisions located above the rear winch. Place the correct link from Table 8-22 in the grab hook. Secure the excess chain with tape or Type III nylon cord.

5. Pull the front sling legs up and tape or tie (breakaway technique) the grablinks to the front side of the upper light bracket.

6. Pull the rear sling legs together on top of the engine deck and tape or tie (breakaway technique) the grablinks together.

7. Raise the apex fittings above the load. Cluster and tie or tape (breakaway technique) the sling legs in each sling set together to prevent entanglement during hookup and lift-off.

Figure 8-22. Truck, Forklift, RT-4000

8-24. Truck, Forklift, MC-6000

a. Applicability. The following item in Table 8-23 is certified for the helicopter(s) listed in the following table by the US Army Soldier Systems Center:

Table 8-23. Truck, Forklift, MC-6000

NOMENCLATURE	MAX WEIGHT (POUNDS)	SLING SET	LINK COUNT FRONT/ REAR	TYPE OF AIRCRAFT	RECOMMENDED AIRSPEED (KNOTS)
Truck, Forklift, MC-6000	19,800	40K	5/5	CH-53	130

b. Materials. The following materials are required to rig this load:

(1) Sling set (40,000-pound capacity) with one additional apex fitting.

(2) Tape, adhesive, pressure-sensitive, 2-inch wide roll.

(3) Cord, nylon, Type III, 550-pound breaking strength.

(4) Webbing, cotton, 1/4-inch, 80-pound breaking strength.

(5) Strap, cargo, tiedown, CGU-1/B (4 each).

(6) Felt sheet, cattle hair, Type IV, 1/2-inch or suitable padding.

c. Personnel. Two persons can prepare and rig this load in 10 minutes.

d. Procedures. The following procedures apply to this load:

(1) Preparation. Prepare the load using the following steps:

(a) Position the forks so they are sitting on the travel blocks and tilted all the way to the rear.

(b) Secure the engine access doors with CGU-1/B tiedown straps.

(c) Secure the rear access doors with CGU-1/B tiedown straps.

(d) Ensure the front wheels are pointed straight ahead. Tie down the steering wheel using Type III nylon cord.

(e) Ensure the fuel tank is not over 3/4 full. Inspect fuel tank cap, oil filler cap, and battery caps for proper installation.

(f) Engage the parking brake and place the transmission in neutral.

(g) Secure the toolbox lid with Type III nylon cord.

(2) Rigging. Rig the load according to the steps in Figure 8-23.

(3) Hookup. Two hookup teams are required for this load. The static discharge person discharges the static electricity. The forward hookup person stands on the front fenders and places apex fitting 1 onto the forward cargo hook. The aft hookup person stands on the engine deck and places apex fitting 2 onto the aft cargo hook. The hookup teams then carefully dismount the load and remain close to the load as the helicopter removes slack from the sling legs. When successful hookup is assured, the hookup teams quickly exit the area underneath the helicopter to the designated rendezvous point.

(4) Derigging. Derigging is the reverse of the preparation and rigging procedures in steps d (1) and d (2).

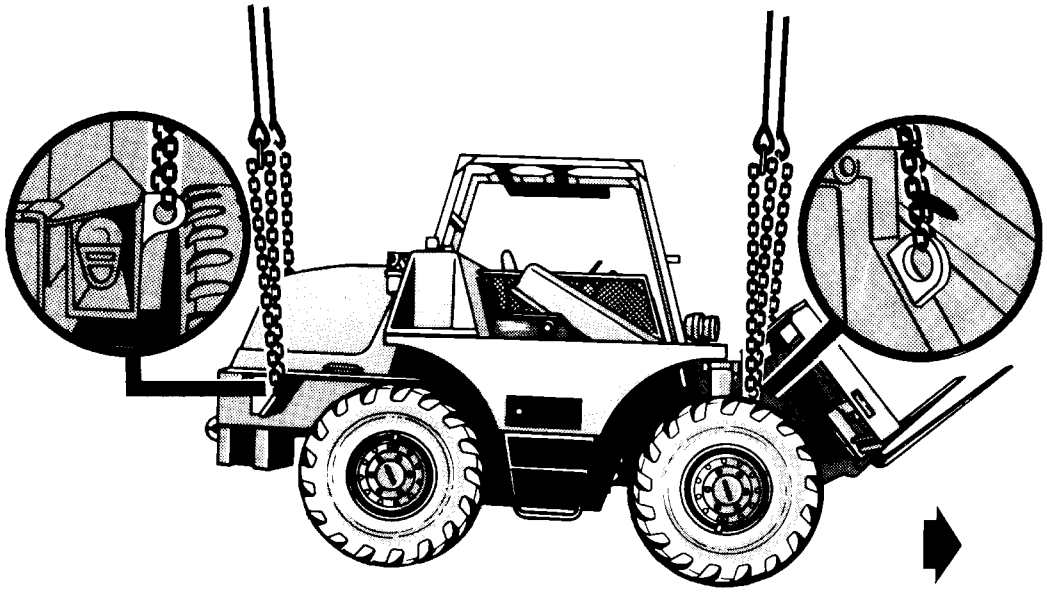

RIGGING STEPS

1. Place two sling legs on apex fitting number 1. Position sling set number 1 on the forward edge of the ROPS.

2. Loop the chain end of the left and right sling legs through their respective lift provisions located on the frame inboard of the top of the front tires. Place the correct link from Table 8-23 in the grab hook.

3. Place two sling legs on apex fitting number 2. Position sling set number 2 on top of the engine deck.

4. Loop the chain end of the left and right sling legs through their respective lift provisions located on the frame aft of the rear tires. Place the correct link from Table 8-23 in the grab hook.

5. Raise the apex fittings above the load. Cluster and tie or tape (breakaway technique) the sling legs in each sling set together to prevent entanglement during hookup and lift-off.

Figure 8-23. Truck, Forklift, MC-6000

8-25. Extendable Boom Forklift (USMC)

a. Applicability. The following item in Table 8-24 is certified for the helicopter(s) listed in the following table by the US Army Soldier Systems Center:

Table 8-24. Extendable Boom Forklift

NOMENCLATURE	MAX WEIGHT (POUNDS)	SLING SET	LINK COUNT FRONT/ REAR	TYPE OF AIRCRAFT	RECOMMENDED AIRSPEED (KNOTS)
Forklift, Extendable Boom	25,640	40K	3/40	CH-53	120

b. Materials. The following materials are required to rig this load:

(1) Sling set (40,000-pound capacity) with one additional apex fitting.

(2) Tape, adhesive, pressure-sensitive, 2-inch wide roll.

(3) Cord, nylon, Type III, 550-pound breaking strength.

(4) Webbing, cotton, 1/4-inch, 80-pound breaking strength.

(5) Strap, cargo, tiedown, CGU-1/B (as required).

c. Personnel. Two persons can prepare and rig this load in 10 minutes.

d. Procedures. The following procedures apply to this load:

(1) Preparation. Prepare the load using the following steps:

(a) Secure the forks against the carriage with the CGU-1/B tiedown straps.

(b) Ensure the front wheels are pointed straight ahead. Tie down the steering wheel using Type III nylon cord.

(c) Ensure the fuel tank is not over 3/4 full. Inspect fuel tank cap, oil filler cap, and battery caps for proper installation.

(d) Raise the carriage 10-inches off the ground. Retract and raise the boom.

(e) Set the handbrake and place the transmission in neutral.

(f) Tape the end of the exhaust pipe.

(2) Rigging. Rig the load according to the steps in Figure 8-24.

(3) Hookup. Two hookup teams are required for this load. The static discharge person discharges the static electricity. The forward hookup person stands on the FOPS and places apex fitting 1 onto the forward cargo hook. The aft hookup person stands on the FOPS and places apex fitting 2 onto the aft cargo hook. The hookup teams then carefully dismount the load and remain close to the load as the helicopter removes slack from the sling legs. When successful hookup is assured, the hookup teams quickly exit the area underneath the helicopter to the designated rendezvous point.

(4) Derigging. Derigging is the reverse of the preparation and rigging procedures in steps d (1) and d (2).

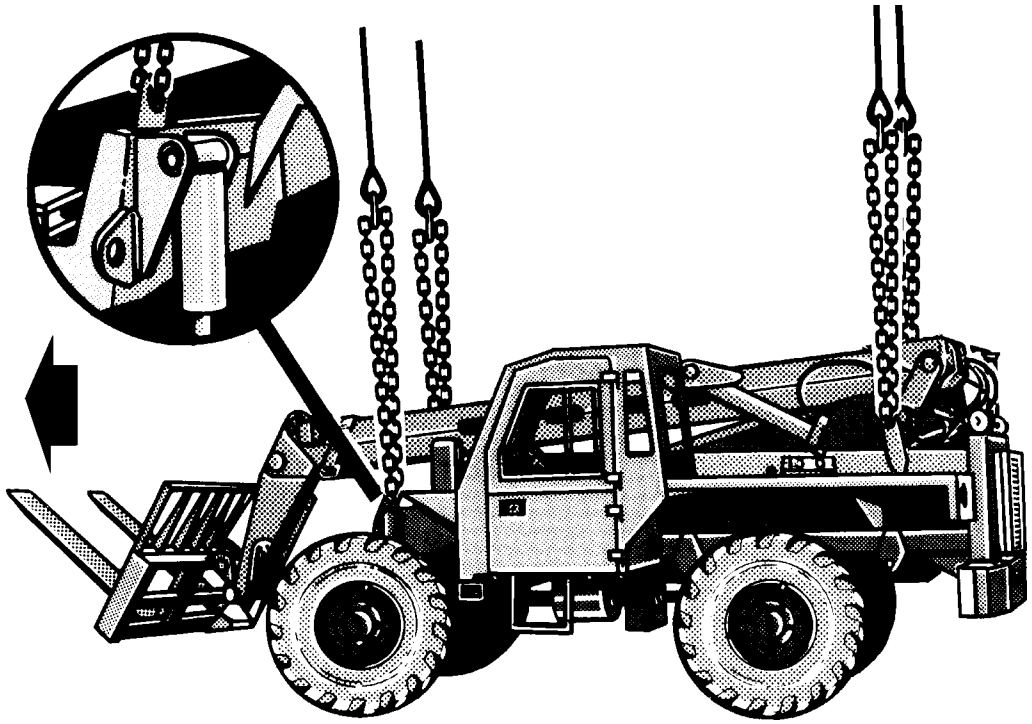

RIGGING STEPS

1. Place two sling legs on apex fitting number 1. Position sling set number 1 on top of the FOPS.

2. Loop the chain end of the left and right sling legs through their respective lift provisions located on the front of the forklift. Place the correct link from Table 8-24 in the grab hook.

3. Place two sling legs on apex fitting number 2. Position sling set number 2 on top of the FOPS.

4. Loop the chain end of the left and right sling legs through their respective lift provisions located on the rear of the forklift. Place the correct link from Table 8-24 in the grab hook. Secure the excess chain with tape or Type III nylon cord.

5. Raise the apex fittings above the load. Cluster and tie or tape (breakaway technique) the sling legs in each sling set together to prevent entanglement during hookup and lift-off.

Figure 8-24. Extendable Boom Forklift

8-26. Boat, Bridge Erection

a. Applicability. The following item in Table 8-25 is certified for the helicopter(s) listed in the following table by the US Army Soldier Systems Center:

Table 8-25. Boat, Bridge Erection

NOMENCLATURE	MAX WEIGHT (POUNDS)	SLING SET	LINK COUNT FRONT/ REAR	TYPE OF AIRCRAFT	RECOMMENDED AIRSPEED (KNOTS)
Boat, Bridge Erection, 27-foot	6,000	15K	4/8	CH-53	30

CAUTION
This load becomes extremely unstable at airspeeds above 30 knots.

b. Materials. The following materials are required to rig this load:

(1) Sling set (15,000-pound capacity) (2 each).

(2) Tape, adhesive, pressure-sensitive, 2-inch wide roll.

(3) Cord, nylon, Type III, 550-pound breaking strength.

(4) Webbing, cotton, 1/4-inch, 80-pound breaking strength.

c. Personnel. Two persons can prepare and rig this load in 15 minutes.

d. Procedures. The following procedures apply to this load:

(1) Preparation. Prepare the load using the following steps:

(a) Remove the canvas cover and stow in the rear (stern) section.

(b) Secure all loose equipment with tape or Type III nylon cord.

(c) Attach the front section to the rear section of the boat.

(d) Tape all glass items, lights, and reflectors.

(e) Ensure both cradles are not attached to the boat sections.

(2) Rigging. Rig the load according to the steps in Figure 8-25.

NOTE: When using the 15,000-pound capacity multileg sling set, tie or tape the inner sling legs to the outer sling legs.

(3) Hookup. Two hookup teams are required for this load. The static discharge person discharges the static electricity. The forward hookup person stands on top of the stern section and places apex fitting 2 onto the forward cargo hook. The aft hookup person stands on top of the bow and places apex fitting 1 onto the aft cargo hook. The hookup teams then carefully dismount the load and remain close to the load as the helicopter removes slack from the sling legs. When successful hookup is assured, the hookup teams quickly exit the area underneath the helicopter to the designated rendezvous point.

NOTE: Brief the helicopter crew to relax the sling leg tension and hover to the side before releasing the web ring to prevent damaging the boat.

(4) Derigging. Derigging is the reverse of the preparation and rigging procedures in steps d (1) and d (2).

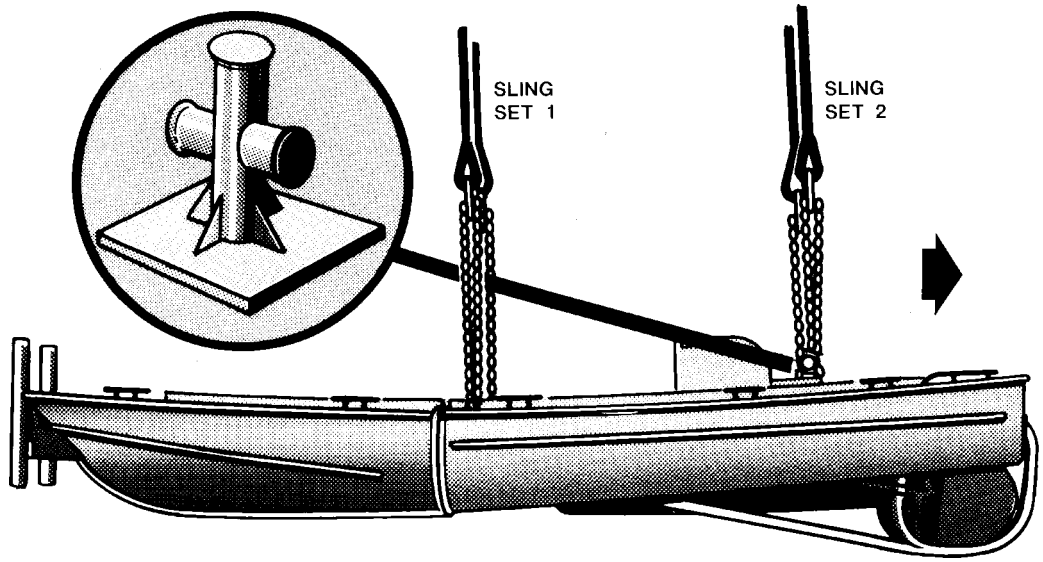

RIGGING STEPS

1. Position web ring number 1 on top of the front (bow) section of the boat.

2. Loop the chain end of the left and right sling legs through their respective lifting bolts located on the left and right side of the forward end of the stern section. Place the correct link from Table 8-25 in the grab hook.

3. Position web ring number 2 on top of the aft (stern) section of the boat. Route the sling leg chains to the aft (stern) side of the horizontal arms of the towing bitt.

4. Wrap the chain end of the left sling leg two times around the vertical post of the towing bitt. Wrap the chain end of the right sling leg in the opposite direction two times around the vertical post of the towing bitt. Ensure the chain wraps are below the horizontal bars on the towing bitt. Place the correct link from Table 8-25 in the grab hook.

5. Raise the apex fittings above the load. Cluster and tie or tape (breakaway technique) the sling legs in each sling set together to prevent entanglement during hookup and lift-off.

Figure 8-25. Boat, Bridge Erection

8-27. Ribbon Bridge Erection Boat, MK2

a. Applicability. The following item in Table 8-26 is certified for the helicopter(s) listed in the following table by the US Army Soldier Systems Center:

Table 8-26. Ribbon Bridge Erection Boat, MK2

NOMENCLATURE	MAX WEIGHT (POUNDS)	SLING SET	LINK COUNT FRONT/ REAR	TYPE OF AIRCRAFT	RECOMMENDED AIRSPEED (KNOTS)
Ribbon Bridge Erection Boat, MK2	9,040	10K 15K	10/5	CH-47 CH-53	130 70

b. Materials. The following materials are required to rig this load:

(1) Sling set (15,000-pound capacity) (2 each).

OR

(2) Sling set (10,000-pound capacity) with one additional apex fitting.

(3) Tape, adhesive, pressure-sensitive, 2-inch wide roll.

(4) Cord, nylon, Type III, 550-pound breaking strength.

(5) Webbing, cotton, 1/4-inch, 80-pound breaking strength.

(6) Clevis assembly, medium, MS70087-2, or clevis assembly, large, MS70087-3 (4 each).

c. Personnel. Two persons can prepare and rig this load in 20 minutes.

d. Procedures. The following procedures apply to this load:

(1) Preparation. Prepare the load using the following steps:

(a) Lower and secure the antenna.

(b) Remove the cab.

NOTE: Do not sling load the boat with the cab installed.

(c) Secure all loose equipment with tape or Type III nylon cord.

(d) Secure all hatches and panels with padlocks or a double length of Type III nylon cord. Secure the jet hatches with padlocks or a double length of Type III nylon cord and anchor cleats.

(e) Tape the mast assembly upper stowage pin.

(f) Attach four clevises to the four boat lifting points (triangular structures with holes) mounted on the boat side rails. The front lifting points are approximately 8.5 feet from the front of the boat. The rear lifting points are approximately 7.5 feet from the rear of the boat.

(2) Rigging. Rig the load according to the steps in Figure 8-26.

NOTE: When using the 15,000-pound capacity multileg sling set, tie or tape the inner sling legs to the outer sling legs.

(3) Hookup. Two hookup teams are required for this load. The static discharge person discharges the static electricity. The forward hookup person stands in the bow of the boat and places apex fitting 1 onto the forward cargo hook. The aft hookup person stands in the stern of the boat and places apex fitting 2 onto the aft cargo hook. The hookup teams then carefully dismount the load and remain close to the load as the helicopter removes slack from the sling legs. When successful hookup is assured, the hookup teams quickly exit the area underneath the helicopter to the designated rendezvous point.

(4) Derigging. Derigging is the reverse of the preparation and rigging procedures in steps d (1) and d (2).

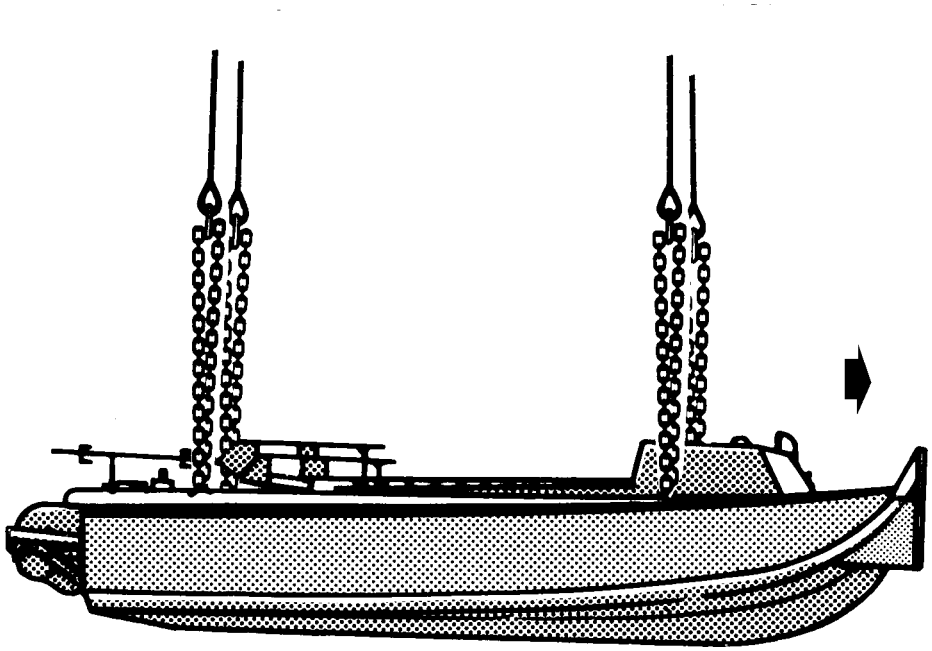

RIGGING STEPS

1. Place two sling legs on apex fitting number 1. Position sling set number 1 on the front of the boat.

2. Loop the chain end of the left and right sling legs through their respective lift provisions located on the front of the boat. Place the correct link from Table 8-26 in the grab hook. Secure the excess chain with tape or Type III nylon cord.

3. Place two sling legs on apex fitting number 2. Position sling set number 2 on the rear of the boat.

4. Loop the chain end of the left and right sling legs through their respective lift provisions located on the rear of the boat. Place the correct link from Table 8-26 in the grab hook.

5. Raise the apex fittings above the load. Cluster and tie or tape (breakaway technique) the sling legs in each sling set together to prevent entanglement during hookup and lift-off.

Figure 8-26. Ribbon Bridge Erection Boat, MK2

8-28. Ribbon Bridge, Interior Bay

a. Applicability. The following item in Table 8-27 is certified for the helicopter(s) listed in the following table by the US Army Soldier Systems Center:

Table 8-27. Ribbon Bridge, Interior Bay

NOMENCLATURE	MAX WEIGHT (POUNDS)	SLING SET	LINK COUNT FRONT/ REAR	TYPE OF AIRCRAFT	RECOMMENDED AIRSPEED (KNOTS)
Ribbon Bridge, Interior Bay	11,800	25K 15K	3/50	CH-47 CH-53	130 100
Ribbon Bridge, Interior Bay, Improved	14,200	25K 15K	3/50	CH-47 CH-53	130 100

b. Materials. The following materials are required to rig this load:

(1) Sling set (15,000-pound capacity) (2 each).

OR

(2) Sling set (25,000-pound capacity) with one additional apex fitting.

(3) Tape, adhesive, pressure-sensitive, 2-inch wide roll.

(4) Cord, nylon, Type III, 550-pound breaking strength.

(5) Webbing, cotton, 1/4-inch, 80-pound breaking strength.

c. Personnel. Two persons can prepare and rig this load in 15 minutes.

d. Procedures. The following procedures apply to this load:

(1) Preparation. Prepare the load using the following steps:

(a) Ensure the end with the roadway lock is the front of the load.

(b) Ensure all the bay latches are securely fastened.

(2) Rigging. Rig the load according to the steps in Figure 8-27.

NOTE: When using the 15,000-pound capacity multileg sling set, tie or tape the inner sling legs to the outer sling legs.

(3) Hookup. Two hookup teams are required for this load. The static discharge person discharges the static electricity. The forward hookup person stands on top of the bridge and places apex fitting 1 onto the forward cargo hook. The aft hookup person stands on top of the bridge and places apex fitting 2 onto the aft cargo hook. The hookup teams then carefully dismount the load and remain close to the load as the helicopter removes slack from the sling legs. When successful hookup is assured, the hookup teams quickly exit the area underneath the helicopter to the designated rendezvous point.

(4) Derigging. Derigging is the reverse of the preparation and rigging procedures in steps d (1) and d (2).

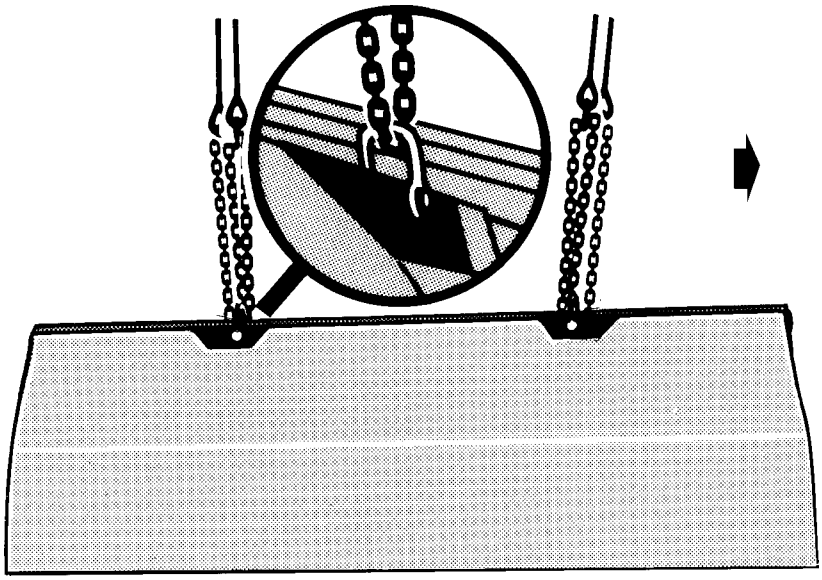

RIGGING STEPS

1. Place two sling legs on apex fitting number 1. Position sling set number 1 on top of the interior bay.

2. Loop the chain end of the left and right sling legs through their respective lift provisions (a pin located between two plates on the top edge of the bay). Place the correct link from Table 8-27 in the grab hook.

3. Place two sling legs on apex fitting number 2. Position sling set number 2 on top of the bay at the rear.

4. Loop the chain end of the left and right sling legs through their respective lift provisions (a pin located between two plates at the top rear edge). Place the correct link from Table 8-27 in the grab hook. Secure the excess chain with tape or Type III nylon cord.

5. Pull the chain of each sling leg up tightly and tape or tie just above the lift provision.

6. Raise the apex fittings above the load. Cluster and tie or tape (breakaway technique) the sling legs in each sling set together to prevent entanglement during hookup and lift-off.

Figure 8-27. Ribbon Bridge, Interior Bay

8-29. Ribbon Bridge, Ramp Bay

a. Applicability. The following item in Table 8-28 is certified for the helicopter(s) listed in the following table by the US Army Soldier Systems Center:

Table 8-28. Ribbon Bridge, Ramp Bay

NOMENCLATURE	MAX WEIGHT (POUNDS)	SLING SET	LINK COUNT FRONT/ REAR	TYPE OF AIRCRAFT	RECOMMENDED AIRSPEED (KNOTS)
Ribbon Bridge, Ramp Bay	11,560	25K 15K	3/50	CH-47 CH-53	130 70
Ribbon Bridge, Ramp Bay, Improved	13,500	25K 15K	3/50	CH-47 CH-53	130 70

b. Materials. The following materials are required to rig this load:

(1) Sling set (15,000-pound capacity) (2 each).

OR

(2) Sling set (25,000-pound capacity) with one additional apex fitting.

(3) Tape, adhesive, pressure-sensitive, 2-inch wide roll.

(4) Cord, nylon, Type III, 550-pound breaking strength.

(5) Webbing, cotton, 1/4-inch, 80-pound breaking strength.

c. Personnel. Two persons can prepare and rig this load in 15 minutes.

d. Procedures. The following procedures apply to this load:

(1) Preparation. Prepare the load using the following steps:

(a) Ensure the short end of the bay is the front of the load.

(b) Ensure all the bay latches are securely fastened.

(2) Rigging. Rig the load according to the steps in Figure 8-28.

NOTE: When using the 15,000-pound capacity multileg sling set, tie or tape the inner sling legs to the outer sling legs.

(3) Hookup. Two hookup teams are required for this load. The static discharge person discharges the static electricity. The forward hookup person stands on top of the ramp bay and places apex fitting 1 onto the forward cargo hook. The aft hookup person stands on top of the ramp bay and places apex fitting 2 onto the aft cargo hook. The hookup teams then carefully dismount the load and remain close to the load as the helicopter removes slack from the sling legs. When successful hookup is assured, the hookup teams quickly exit the area underneath the helicopter to the designated rendezvous point.

(4) Derigging. Derigging is the reverse of the preparation and rigging procedures in steps d (1) and d (2).

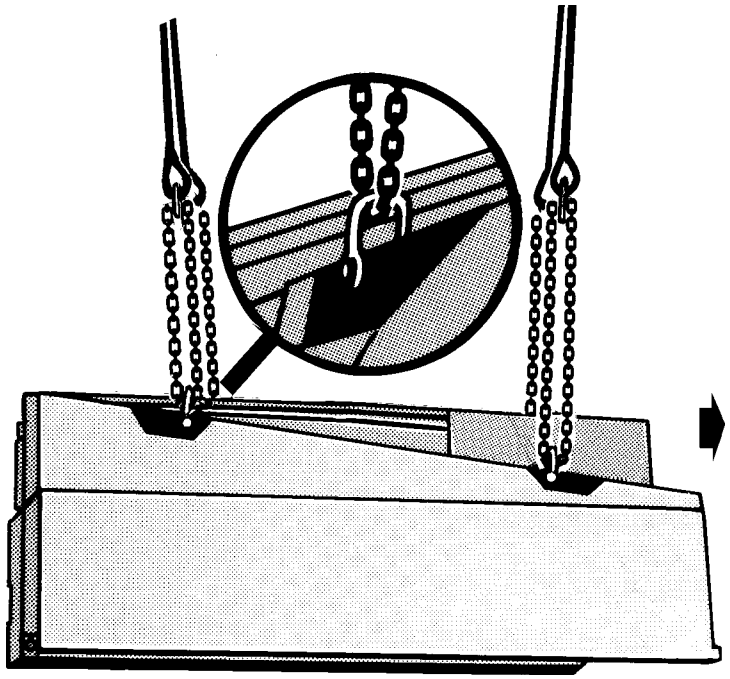

RIGGING STEPS

1. Place two sling legs on apex fitting number 1. Position sling set number 1 on top of the front of the ramp bay.

2. Loop the chain end of the left and right sling legs through their respective lift provisions (a pin located between two plates on the top edge of the bay). Place the correct link from Table 8-28 in the grab hook.

3. Place two sling legs on apex fitting number 2. Position sling set number 2 on top of the ramp bay at the rear.

4. Loop the chain end of the left and right sling legs through their respective lift provisions (a pin located between two plates at the top rear edge). Place the correct link from Table 8-28 in the grab hook. Secure the excess chain with tape or Type III nylon cord.

5. Pull the chain of each sling leg up tightly and tape or tie just above the lift provision.

6. Raise the apex fittings above the load. Cluster and tie or tape (breakaway technique) the sling legs in each sling set together to prevent entanglement during hookup and lift-off.

Figure 8-28. Ribbon Bridge, Ramp Bay

8-30. Medium Girder Bridge (USMC)

a. Applicability. The following item in Table 8-29 is certified for the helicopter(s) listed in the following table by the US Army Soldier Systems Center:

Table 8-29. Medium Girder Bridge

NOMENCLATURE	MAX WEIGHT (POUNDS)	SLING SET	LINK COUNT FRONT/ REAR	TYPE OF AIRCRAFT	RECOMMENDED AIRSPEED (KNOTS)
Medium Girder Bridge, five bay, double story, one end, undecked, with building frame, and launching nose	18,240	40K	5/5	CH-53	80

CAUTION
DUE TO THE EXTREME LENGTH OF THIS LOAD THE AIRCRAFT RADAR ALTIMETER BECOMES UNRELIABLE. ENSURE THE PILOTS ARE NOTIFIED PRIOR TO PICKUP.

b. Materials. The following materials are required to rig this load:

(1) Sling set (40,000-pound capacity) with one additional apex fitting.

(a) Additional chain lengths, part number 607050 (4 each).

(b) Additional coupling links, part number 577-0815 (4 each).

(2) Tape, adhesive, pressure-sensitive, 2-inch wide roll.

(3) Cord, nylon, Type III, 550-pound breaking strength.

(4) Webbing, cotton, 1/4-inch, 80-pound breaking strength.

(5) Strap, cargo, tiedown, CGU-1/B (8 each).

(6) Tiedown assembly, chain, MB-1 (12 each).

(7) Fire hose, 2 1/2-inch or larger, 8-feet long (12 each).

c. Personnel. Four persons can prepare and rig this load in 15 minutes.

d. Procedures. The following procedures apply to this load:

(1) Preparation. Prepare the load using the following steps:

(a) Ensure the launching nose is snug against the Bankseat Beam located on the front of the bridge.

(b) Ensure all tiedown chains and straps are tight and the hydraulic jacks are safety wired in place.

(c) Tape all ratchets and chain tensioners.

(d) Attach an additional chain length to each sling leg chain using the coupling links.

(e) Slide an 8-foot length of fire hose on each sling leg chain.

(2) Rigging. Rig the load according to the steps in Figure 8-29.

(3) Hookup. Two hookup teams are required for this load. The static discharge person discharges the static electricity. The forward hookup person stands on the left girder and places apex fitting 1 onto the forward cargo hook. The aft hookup person stands on the left girder and places apex fitting 2 onto the aft cargo hook. The

hookup teams then carefully dismount the load and remain close to the load as the helicopter removes slack from the sling legs. When successful hookup is assured, the hookup teams quickly exit the area underneath the helicopter to the designated rendezvous point.

(4) Derigging. Derigging is the reverse of the preparation and rigging procedures in steps d (1) and d (2).

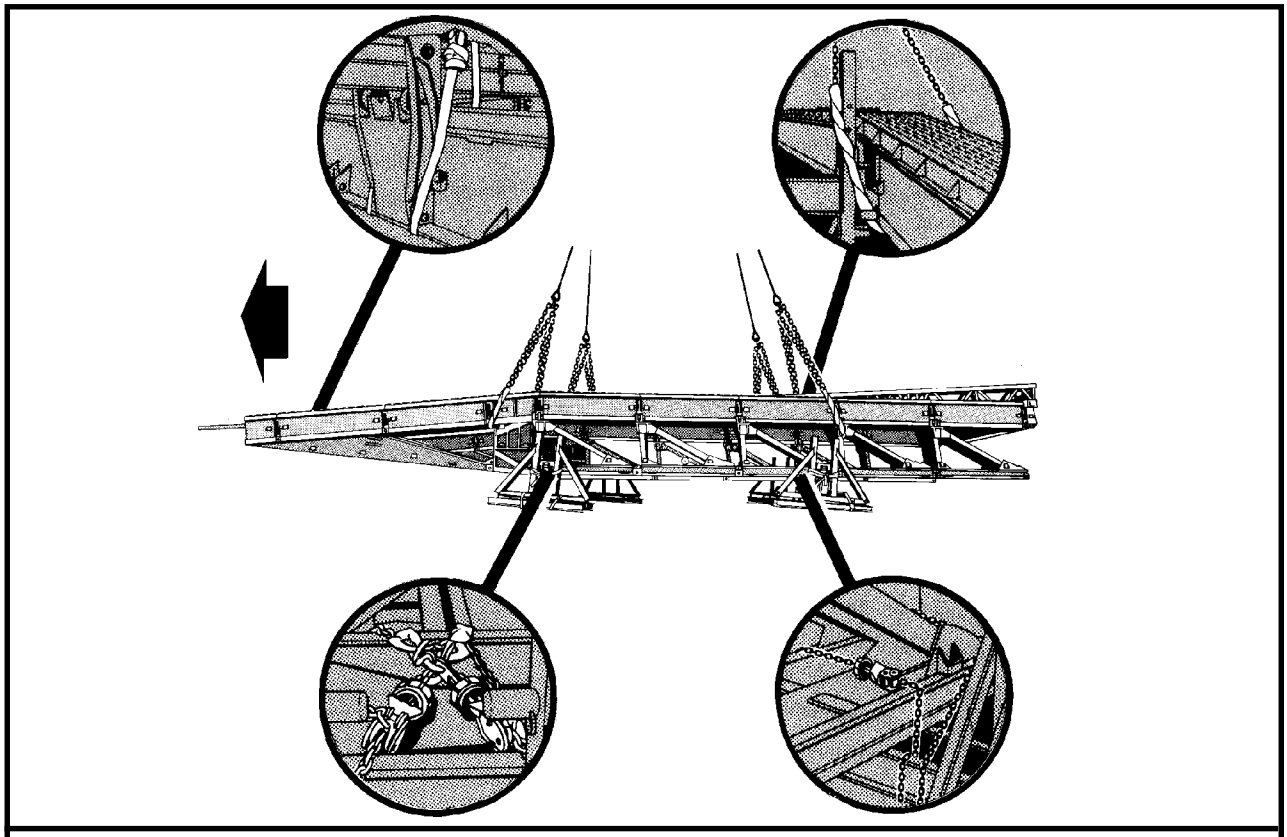

RIGGING STEPS

1. Place two sling legs on apex fitting number 1. Position sling set number 1 on top of the front (sloped end) of the bridge.

2. Route the left sling leg to the front of the bridge. Loop the chain end around the joint between the junction panels and the first sloping top panel. Ensure the chain loops around each launching nose girder post. Place the correct link from Table 8-29 in the grab hook. Repeat on the right side with the right sling leg.

3. Place two sling legs on apex fitting number 2. Position sling set number 2 on top of the bridge at the rear.

4. Route the left sling leg to the rear of the bridge. Loop the chain end of the left sling leg around the joint on the second bottom panel from the end formed by the vertical beam and the diagonal beam (DO NOT LOOP THE CHAIN AT THE JOINT BETWEEN THE TOP AND BOTTOM PANELS). Place the correct link from Table 8-29 in the grab hook. Repeat on the right side with the right sling leg.

5. Raise the apex fittings above the load. Cluster and tie or tape (breakaway technique) the sling legs in each sling set together to prevent entanglement during hookup and lift-off.

Figure 8-29. Medium Girder Bridge

8-31. Pneumatic Tool and Compressor Outfit / Hydraulic Pioneer Tool Outfit (PTO) on M353 Trailer

a. Applicability. The following items in Table 8-30 are certified for the helicopter(s) listed in the following table by the US Army Soldier Systems Center:

Table 8-30. Tool Outfits on M353 Trailer

NOMENCLATURE	MAX WEIGHT (POUNDS)	SLING SET	LINK COUNT FRONT/ REAR	TYPE OF AIRCRAFT	RECOMMENDED AIRSPEED (KNOTS)
Pneumatic Tool and Compressor, TAMCN B0395	8,040	15K	5/30	CH-53	120
Hydraulic Pioneer Tool Outfit (PTO)	6,740	10K	3/30	CH-47	110

b. Materials. The following materials are required to rig this load:

(1) Sling set (15,000-pound capacity) (2 each).

OR

(2) Sling set (10,000-pound capacity) with one additional apex fitting.

(3) Tape, adhesive, pressure-sensitive, 2-inch wide roll.

(4) Cord, nylon, Type III, 550-pound breaking strength.

(5) Webbing, cotton, 1/4-inch, 80-pound breaking strength.

(6) Felt sheet, cattle hair, Type IV, 1/2-inch or suitable substitute.

c. Personnel. Two persons can prepare and rig this load in 15 minutes.

d. Procedures. The following procedures apply to this load:

(1) Preparation. Prepare the load using the following steps:

(a) Engage both hand brakes.

(b) Ensure the fuel tanks are not over 3/4 full. Inspect the fuel tank cap, oil filler cap, and battery caps for proper installation. Secure all loose gear and doors.

(c) Secure the light cable to the drawbar with tape or Type III nylon cord.

(d) Tape all glass items, lights, and reflectors.

(e) Secure the two small wheels.

(2) Rigging. Rig the load according to the steps in Figure 8-30.

NOTE: When using the 15,000-pound capacity multileg sling set, tie or tape the inner sling legs to the outer sling legs.

(3) Hookup. Two hookup teams are required for this load. The static discharge person discharges the static electricity. The forward hookup person stands on top of the compressor and places apex fitting 1 onto the forward cargo hook. The aft hookup person stands on top of the compressor and places apex fitting 2 onto the aft cargo hook. The hookup teams then carefully dismount the load and remain close to the load as the helicopter removes slack from the sling legs. When successful hookup is assured, the hookup teams quickly exit the area underneath the helicopter to the designated rendezvous point.

NOTE: Brief the helicopter crew to relax the sling leg tension and hover to the side before releasing the web ring to prevent damaging the boat.

(4) Derigging. Derigging is the reverse of the preparation and rigging procedures in steps d (1) and d (2).

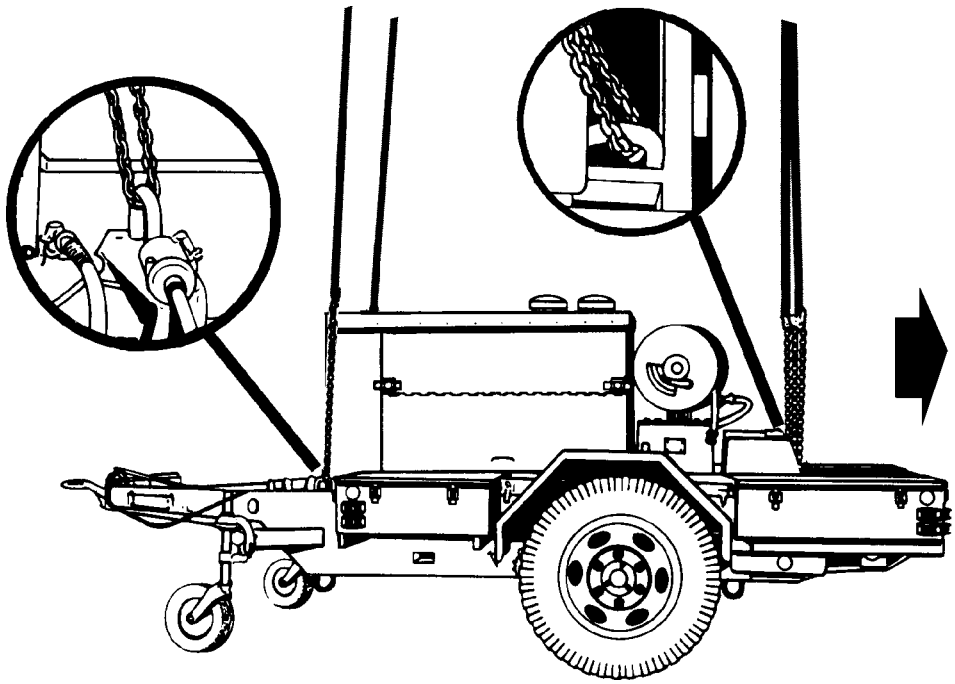

RIGGING STEPS

1. Place two sling legs on apex fitting number 1. Position sling set number 1 on top of the load.

2. Loop the chain end of the left and right sling legs through their respective lifting provisions located on the front corners of the trailer . Place the correct link from Table 8-30 in the grab hook.

3. Place two sling legs on apex fitting number 2. Position sling set number 1 on top of the load.

4. Loop the chain end of the left and right sling legs through their respective lifting provisions located on the rear corners of the trailer . Place the correct link from Table 8-30 in the grab hook.

5. Pad the chains where they contact the load.

6. Raise the apex fittings above the load. Cluster and tie or tape (breakaway technique) the sling legs in each sling set together to prevent entanglement during hookup and lift-off.

Figure 8-30. Tool Outfits on M353 Trailer

8-32. 35-Foot Riverine Assault Craft (RAC) With or Without Trailer

a. Applicability. The following items in Table 8-31 are certified for the helicopter(s) listed in the following table by the US Army Soldier Systems Center:

Table 8-31. 35-Foot Riverine Assault Craft (RAC) With or Without Trailer

NOMENCLATURE	MAX WEIGHT (POUNDS)	SLING SET	LINK COUNT FRONT/ REAR	TYPE OF AIRCRAFT	RECOMMENDED AIRSPEED (KNOTS)
35-Foot Riverine Assault Craft (RAC)	13,800	40K	3/10	CH-53	70
35-Foot Riverine Assault Craft (RAC) with Trailer	15,800	40K	3/10	CH-53	110

b. Materials. The following materials are required to rig this load:

(1) Sling set (40,000-pound capacity) with one additional apex fitting.

(2) Tape, adhesive, pressure-sensitive, 2-inch wide roll.

(3) Cord, nylon, Type III, 550-pound breaking strength.

(4) Webbing, cotton, 1/4-inch, 80-pound breaking strength.

(5) Strap, cargo, tiedown (10,000-pound capacity) (4 each).

c. Personnel. Four persons can prepare and rig this load in 15 minutes.

d. Procedures. The following procedures apply to this load:

(1) Preparation. Prepare the load using the following steps:

(a) Place dunnage under the tongue of the trailer and retract the landing gear leg.

(b) Ensure the trailer is secured to the hull with the three attaching straps and the forward (bow) chain. Pad the RAC where the straps make contact.

(c) Engage the parking brake or chock the wheels.

(d) Stack and secure any extra equipment at the lowest point in the RAC with tiedown straps or Type III nylon cord.

(e) Secure the weapons and install sight covers on the dial sights with tape or Type III nylon cord.

(f) Secure hatch cover, firing platforms, unused lines and equipment with tape or Type III nylon cord.

(2) Rigging. Rig the load according to the steps in Figure 8-31.

(3) Hookup. Two hookup teams are required for this load. The static discharge person discharges the static electricity. The forward hookup person stands on the forward deck and places apex fitting 1 onto the forward cargo hook. The aft hookup person stands on the aft transom deck and places apex fitting 2 onto the aft cargo hook. The hookup teams then carefully dismount the load and remain close to the load as the helicopter removes slack from the sling legs. When successful hookup is assured, the hookup teams quickly exit the area underneath the helicopter to the designated rendezvous point.

(4) Derigging. Derigging is the reverse of the preparation and rigging procedures in steps d (1) and d (2).

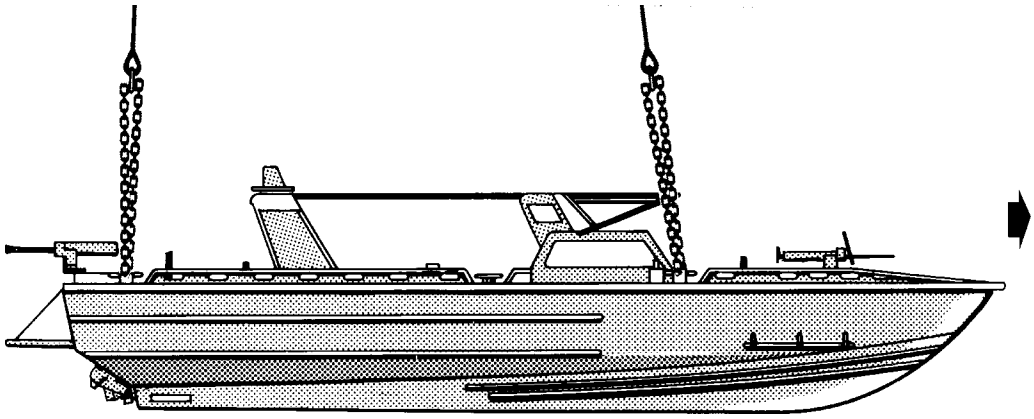

RIGGING STEPS

1. Place two sling legs on apex fitting number 1. Position sling set number 1 on top of the bow hatch.

2. Loop the chain end of the left and right sling legs through their respective lift provisions. Place the correct link from Table 8-31 in the grab hook.

3. Place two sling legs on apex fitting number 2. Position sling set number 2 on top of the canvas cover.

4. Loop the chain end of the left and right sling legs through their respective lift provisions. Place the correct link from Table 8-31 in the grab hook. Secure the excess chain with tape or Type III nylon cord.

5. Raise the apex fittings above the load. Cluster and tie or tape (breakaway technique) the sling legs in each sling set together to prevent entanglement during hookup and lift-off.

Figure 8-31. 35-Foot Riverine Assault Craft (RAC) With or Without Trailer

8-33. Water Purification Unit, Reverse Osmosis (ROWPU)

a. Applicability. The following item in Table 8-32 is certified for the helicopter(s) listed in the following table by the US Army Soldier Systems Center:

Table 8-32. Water Purification Unit, Reverse Osmosis (ROWPU)

NOMENCLATURE	MAX WEIGHT (POUNDS)	SLING SET	LINK COUNT FRONT/ REAR	TYPE OF AIRCRAFT	RECOMMENDED AIRSPEED (KNOTS)
Water Purification Unit, Reverse Osmosis, MC 257, 600 gph, Skid Mounted	7,400	15K	5/5	CH-53	90

b. Materials. The following materials are required to rig this load:

(1) Sling set (15,000-pound capacity) (2 each).

(2) Tape, adhesive, pressure-sensitive, 2-inch wide roll.

(3) Cord, nylon, Type III, 550-pound breaking strength.

(4) Webbing, cotton, 1/4-inch, 80-pound breaking strength.

c. Personnel. Two persons can prepare and rig this load in 15 minutes.

d. Procedures. The following procedures apply to this load:

(1) Preparation. Prepare the load using the following steps:

(a) Secure all boxes, containers, and loose equipment with tape or Type III nylon cord.

(b) Tape all glass fixtures, reflectors, and gages.

(2) Rigging. Rig the load according to the steps in Figure 8-32.

NOTE: When using the 15,000-pound capacity multileg sling set, tie or tape the inner sling legs to the outer sling legs.

(3) Hookup. Two hookup teams are required for this load. The static discharge person discharges the static electricity. The forward hookup person stands on top of the unit and places apex fitting 1 onto the forward cargo hook. The aft hookup person stands on top of the unit and places apex fitting 2 onto the aft cargo hook. The hookup teams then carefully dismount the load and remain close to the load as the helicopter removes slack from the sling legs. When successful hookup is assured, the hookup teams quickly exit the area underneath the helicopter to the designated rendezvous point.

(4) Derigging. Derigging is the reverse of the preparation and rigging procedures in steps d (1) and d (2).

NOTE: The water pump end is designated as the forward end.

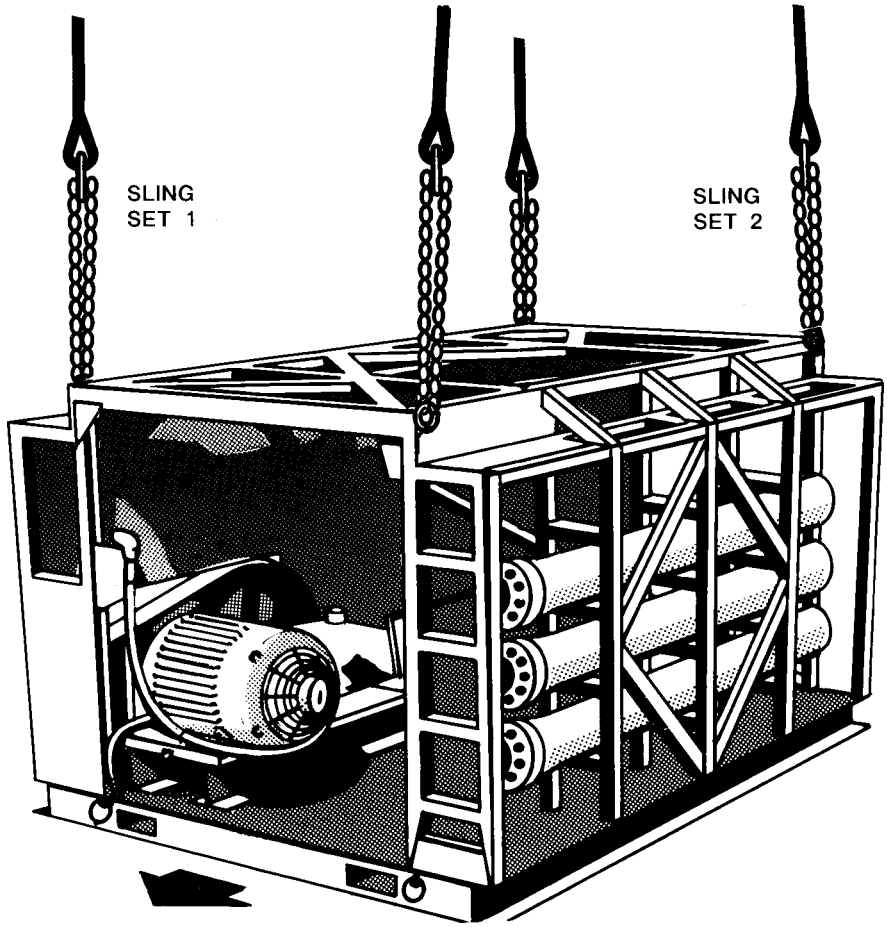

RIGGING STEPS

1. Position sling set number 1 on top of the pump end of the ROWPU.

2. Loop the chain end of the left and right sling legs through their respective lift provisions located on the top corners of the unit. Place the correct link from Table 8-32 in the grab hook.

3. Position sling set number 2 on top of the unit at the rear.

4. Loop the chain end of the left and right sling legs through their respective lift provisions located on the top corners of the unit. Place the correct link from Table 8-32 in the grab hook.

5. Raise the apex fittings above the load. Cluster and tie or tape (breakaway technique) the sling legs in each sling set together to prevent entanglement during hookup and lift-off.

Figure 8-32. Water Purification Unit, Reverse Osmosis

8-34. Water Purification Unit, Reverse Osmosis (ROWPU), Trailer Mounted

a. Applicability. The following item in Table 8-33 is certified for the helicopter(s) listed in the following table by the US Army Soldier Systems Center:

Table 8-33. Water Purification Unit, Reverse Osmosis (ROWPU), Trailer Mounted

NOMENCLATURE	MAX WEIGHT (POUNDS)	SLING SET	LINK COUNT FRONT/ REAR	TYPE OF AIRCRAFT	RECOMMENDED AIRSPEED (KNOTS)
Water Purification Unit, Reverse Osmosis, 600-gph, Trailer Mounted	17,800	25K	3/10	CH-47	100

b. Materials. The following materials are required to rig this load:

(1) Sling set (25,000-pound capacity) with one additional apex fitting.

(2) Tape, adhesive, pressure-sensitive, 2-inch wide roll.

(3) Cord, nylon, Type III, 550-pound breaking strength.

(4) Webbing, cotton, 1/4-inch, 80-pound breaking strength.

(5) Strap, cargo, tiedown, CGU-1/B (4 each).

(6) Felt sheet, cattle hair, Type IV, 1/2-inch or suitable padding

c. Personnel. Two persons can prepare and rig this load in 20 minutes.

d. Procedures. The following procedures apply to this load:

(1) Preparation. Prepare the load using the following steps:

(a) Drain the water from the unit.

(b) Retract the trailer jacks.

(c) Remove the canvas from the unit.

(d) Secure all hoses and loose equipment with tape or Type III nylon cord.

(e) Tape all reflectors, lights, and gages.

(f) Secure the generator doors with CGU-1/B straps.

(g) Ensure the fuel tanks are not over 3/4 full. Inspect the fuel tank cap, oil filler cap, and battery caps for proper installation.

(h) Engage the hand brake.

(2) Rigging. Rig the load according to the steps in Figure 8-33.

(3) Hookup. Two hookup teams are required for this load. The static discharge person discharges the static electricity. The forward hookup person stands on top of the generator and places apex fitting 1 onto the forward cargo hook. The aft hookup person stands on the frame and places apex fitting 2 onto the aft cargo hook. The hookup teams then carefully dismount the load and remain close to the load as the helicopter removes slack from the sling legs. When successful hookup is assured, the hookup teams quickly exit the area underneath the helicopter to the designated rendezvous point.

(4) Derigging. Derigging is the reverse of the preparation and rigging procedures in steps d (1) and d (2).

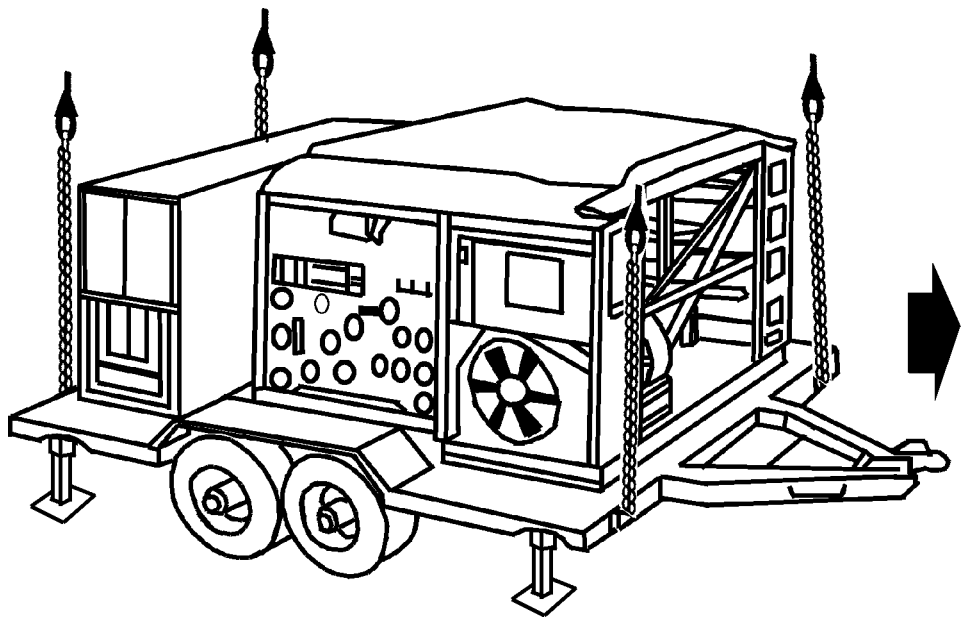

RIGGING STEPS

1. Place two sling legs on apex fitting number 1. Position sling set number 1 on top of the generator.

2. Loop the chain end of the left and right sling legs through their respective lift provisions located on the front corners of the trailer. Place the correct link from Table 8-33 in the grab hook.

3. Place two sling legs on apex fitting number 2. Position sling set number 2 on top of the tongue end of the unit.

4. Loop the chain end of the left and right sling legs through their respective lift provisions located on the rear corners of the trailer. Place the correct link from Table 8-33 in the grab hook. Secure the excess chain with tape or Type III nylon cord.

5. Pad the slings where they contact the unit.

6. Raise the apex fittings above the load. Cluster and tie or tape (breakaway technique) the sling legs in each sling set together to prevent entanglement during hookup and lift-off.

Figure 8-33. Water Purification Unit, Reverse Osmosis, Trailer Mounted

8-35. Inland Petroleum Distribution System (IPDS), Mainline Pump on 20-Foot Flatrack

a. Applicability. The following item in Table 8-34 is certified for the helicopter(s) listed in the following table by the US Army Soldier Systems Center:

Table 8-34. Inland Petroleum Distribution System (IPDS), Mainline Pump on 20-Foot Flatrack

NOMENCLATURE	MAX WEIGHT (POUNDS)	SLING SET	LINK COUNT FRONT/ REAR	TYPE OF AIRCRAFT	RECOMMENDED AIRSPEED (KNOTS)
Inland Petroleum Distribution System (IPDS), Mainline Pump on 20-Foot Flatrack	19,500	25K	2/30	CH-47	125

b. Materials. The following materials are required to rig this load:

(1) Sling set (25,000-pound capacity) with one additional apex fitting.

(a) Additional chain lengths, part number 38850-00053-102 (4 each).

(b) Additional coupling links, part number 664241 (4 each).

(2) Tape, adhesive, pressure-sensitive, 2-inch wide roll.

(3) Cord, nylon, Type III, 550-pound breaking strength.

(4) Webbing, cotton, 1/4-inch, 80-pound breaking strength.

c. Personnel. Three persons can prepare and rig this load in 20 minutes.

d. Procedures. The following procedures apply to this load:

(1) Preparation. Prepare the load using the following steps:

(a) The pump end of the flatrack is the forward end of the load.

(b) Secure all loose equipment with tape or Type III nylon cord.

(c) Attach an additional chain length to each sling leg chain using a coupling link.

(2) Rigging. Rig the load according to the steps in Figure 8-34.

(3) Hookup. Two hookup teams are required for this load. The static discharge person discharges the static electricity. The forward hookup person stands on the engine cover and places apex fitting 1 onto the forward cargo hook. The aft hookup person stands on the engine cover and places apex fitting 2 onto the aft cargo hook. The hookup teams then carefully dismount the load and remain close to the load as the helicopter removes slack from the sling legs. When successful hookup is assured, the hookup teams quickly exit the area underneath the helicopter to the designated rendezvous point.

NOTE: Brief the pilot to relax the sling tension and hover to the side of the load when releasing the apex fitting to prevent damaging the load.

(4) Derigging. Derigging is the reverse of the preparation and rigging procedures in steps d (1) and d (2).

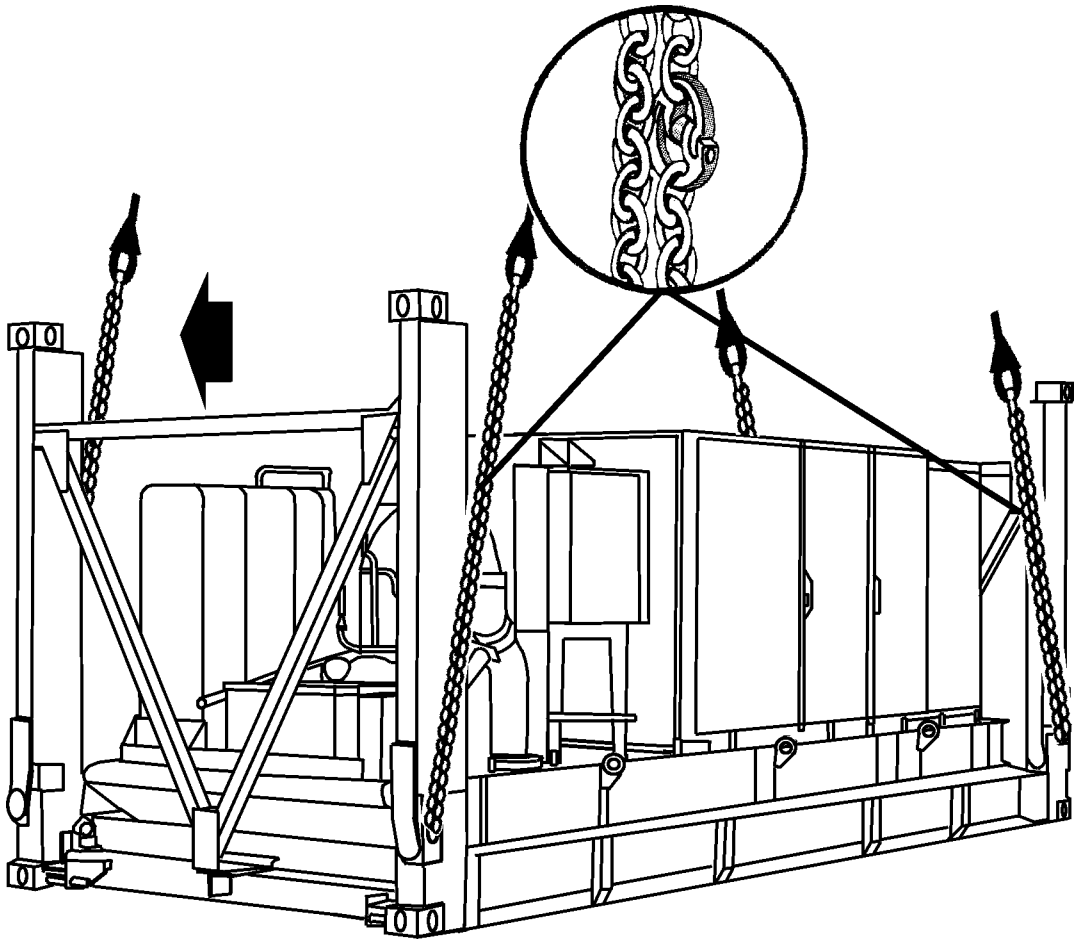

RIGGING STEPS

1. Place two sling legs on apex fitting number 1. Position sling set number 1 on top of the pump closet on the forward end.

2. Loop the chain end of the left and right sling legs through their respective lift provisions located on the front portion of the container. Place the correct link from Table 8-34 in the grab hook.

3. Place two sling legs on apex fitting number 2. Position sling set number 2 on top of the engine compartment near the aft end.

4. Loop the chain end of the left and right sling legs through their respective lift provisions located on the aft end of the pump. Place the correct link from Table 8-34 in the grab hook. Secure the excess chain with tape or Type III nylon cord.

5. Raise the apex fittings above the load. Cluster and tie or tape (breakaway technique) the sling legs in each sling set together to prevent entanglement during hookup and lift-off.

Figure 8-34. Inland Petroleum Distribution System (IPDS), Mainline Pump on 20-Foot Flatrack

8-36. Vibrating Roller, Caterpillar, RO-33

a. Applicability. The following item in Table 8-35 is certified for the helicopter(s) listed in the following table by the US Army Soldier Systems Center:

Table 8-35. Vibrating Roller, Caterpillar, RO-33

NOMENCLATURE	MAX WEIGHT (POUNDS)	SLING SET	LINK COUNT FRONT/ REAR	TYPE OF AIRCRAFT	RECOMMENDED AIRSPEED (KNOTS)
Vibrating Roller, Caterpillar, RO-33	16,425	25K	30/3	CH-47	120

b. Materials. The following materials are required to rig this load:

(1) Sling set (25,000-pound capacity) with one additional apex fitting..

(2) Tape, adhesive, pressure-sensitive, 2-inch wide roll.

(3) Cord, nylon, Type III, 550-pound breaking strength.

(4) Webbing, cotton, 1/4-inch, 80-pound breaking strength.

(5) Lumber, 2-inch x 4-inch (as required).

(6) Felt sheet, cattle hair, Type IV, 1/2-inch or suitable padding.

c. Personnel. Two persons can prepare and rig this load in 15 minutes.

d. Procedures. The following procedures apply to this load:

(1) Preparation. Prepare the load using the following steps:

(a) Place the transmission in neutral and set the parking brake.

(b) Ensure the fuel tank is not over 3/4 full. Ensure the fuel tank cap is in the vent position. Inspect the oil filter cap and battery caps for proper installation.

(c) Secure the seat cushion to the frame with tape or Type III nylon cord.

(d) Remove and secure the exhaust stack.

(e) Tape all lights and gauges. Secure all loose covers and panels with tape or Type III nylon cord.

(f) Tie down the steering wheel with Type III nylon cord.

(g) Place the wooden block in the pivot point at the center of the roller to prevent the two halves from flexing during flight.

(2) Rigging. Rig the load according to the steps in Figure 8-35.

(3) Hookup. The hookup team stands beside the roller. The static wand person discharges the static electricity with the static wand. The forward hookup person places apex fitting 2 onto the forward cargo hook. The aft hookup person places apex fitting 1 onto the aft cargo hook. The hookup team then moves clear of the load but remains close to the load as the helicopter removes slack from the sling legs. When successful hookup is assured, the hookup team quickly exits the area underneath the helicopter to the designated rendezvous point.

(4) Derigging. Derigging is the reverse of the preparation and rigging procedures in steps d (1) and d (2).

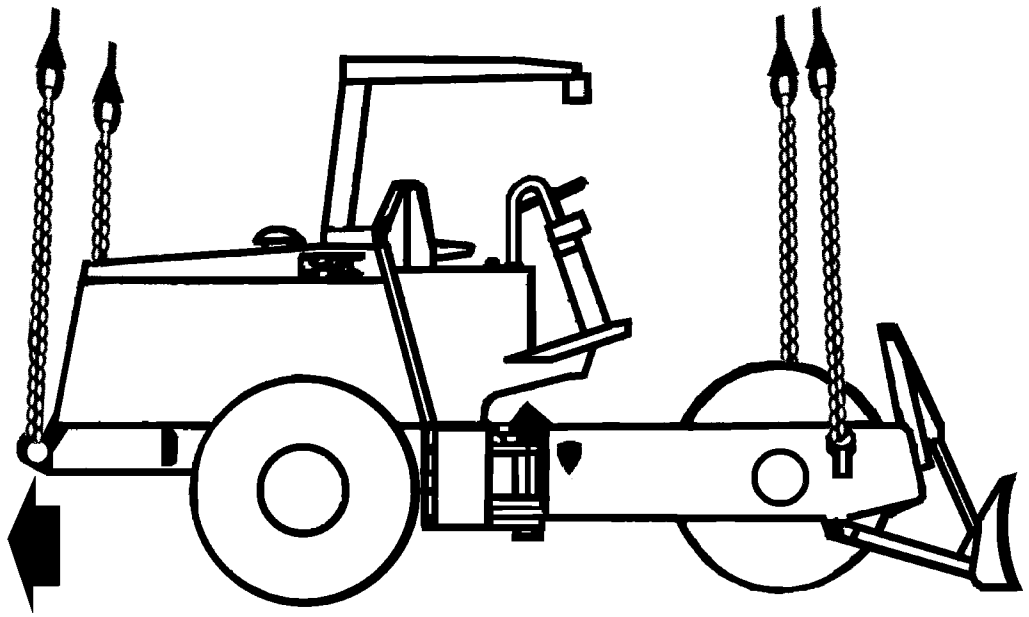

RIGGING STEPS

1. Connect 2 sling legs to apex fitting number 1. Position the apex fitting next to the front of the roller.

2. Loop the chain end of the sling legs through their respective lift provisions. Place the correct link from Table 8-35 in the grab hook.

3. Connect 2 sling legs to apex fitting number 2. Position the apex fitting on top of the aft end (engine compartment end) of the roller.

4. Loop the chain end of the sling legs through their respective lift provisions located on the aft end of the roller. Place the correct link from Table 8-35 in the grab hook.

5. Pad the chain where it contacts the engine compartment. Secure all excess chain with tape or Type III nylon cord.

6. Cluster and tie or tape (breakaway technique) the sling legs in each sling set together to prevent entanglement during hookup and lift-off.

Figure 8-35. Vibrating Roller, Caterpillar, RO-33

CHAPTER 9

CERTIFIED DUAL-POINT RIGGING PROCEDURES FOR LIQUID CONTAINERS

9-1. INTRODUCTION

This chapter contains rigging procedures for dual-point lift of liquid containers that have been certified for sling load. Each rigging procedure is found in a paragraph that includes a description of the load, materials required for rigging, and steps to complete the procedure. An applicability paragraph is also a part of each paragraph and identifies the certified loads. The certified dual-point rigging procedures for liquid containers are in this section. Paragraphs 9-2 through 9-4 give detailed instructions for rigging loads.

NOTE: Reach Pendants may be used on dual point loads. Place a Reach Pendant on each apex fitting. A static discharge person is not required when using a Reach Pendant.

9-2. Two Storage Modules, Fuel/Water (Side by Side)

a. Applicability. The following items in Table 9-1 are certified for the helicopter(s) listed in the following table by the US Army Soldier Systems Center:

Table 9-1. Two Storage Modules, Fuel/Water (Side by Side)

NOMENCLATURE	MAX WEIGHT (POUNDS)	SLING SET	LINK COUNT FRONT/ REAR	TYPE OF AIRCRAFT	RECOMMENDED AIRSPEED (KNOTS)
Two Sixcon Storage Modules, Fuel/Water, TAMCN B2085/B2086 (Empty), Side by Side	5,500	15K	3/3	CH-53	120
Two Sixcon Storage Modules, Fuel/Water, TAMCN B2085/B2086 (Full), Side by Side	20,100	40K	3/3	CH-53	120
One Sixcon, Storage Module, Fuel/Water, TAMCN B2085/B2086 (Empty) and One Sixcon Pump Module, Fuel/Water, TAMCN B1580/B1581, Side by Side	5,100	15K	3/3	CH-53	120
Two Sixcon Pump Modules, Fuel/Water, TAMCN B1580/B1581, Side by Side	4,700	15K	3/3	CH-53	120

b. Materials. The following materials are required to rig this load:

(1) Sling set (15,000-pound capacity) (2 each).

OR

(2) Sling set (40,000-pound capacity) with one additional apex fitting.

(3) Tape, adhesive, pressure-sensitive, 2-inch wide roll.

(4) Cord, nylon, Type III, 550-pound breaking strength.

(5) Webbing, cotton, 1/4-inch, 80-pound breaking strength.

c. Personnel. Two persons can prepare and rig this load in 15 minutes.

d. Procedures. The following procedures apply to this load:

(1) Preparation. Prepare the load using the following steps:

CAUTION
The Tandemloc horizontal connector, MFR Part NO. 712946-M-PZN, NSN 5410-01-363-7086, must be used to secure the Sixcons together. DO NOT USE ANY OTHER TYPE OF CONNECTOR.

(a) Connect the two modules together side by side using the horizontal connectors. Ensure the connectors are properly secured.

(b) Ensure the modules are in one of the configurations shown in Table 9-1.

(c) Secure all hatches, hose valves, and loose equipment with tape or Type III nylon cord.

(2) Rigging. Rig the load according to the steps in Figure 9-1.

NOTE: When using the 15,000-pound capacity multileg sling set, tie or tape the inner sling legs to the outer sling legs.

(3) Hookup. Two hookup teams are required for this load. The static discharge person discharges the static electricity. The forward hookup person stands on top of the front module and places apex fitting 1 onto the forward cargo hook. The aft hookup person stands on the top of the rear module and places apex fitting 2 onto the aft cargo hook. The hookup teams then carefully dismount the load and remain close to the load as the helicopter removes slack from the sling legs. When successful hookup is assured, the hookup teams quickly exit the area underneath the helicopter to the designated rendezvous point.

(4) Derigging. Derigging is the reverse of the preparation and rigging procedures in steps d (1) and d (2).

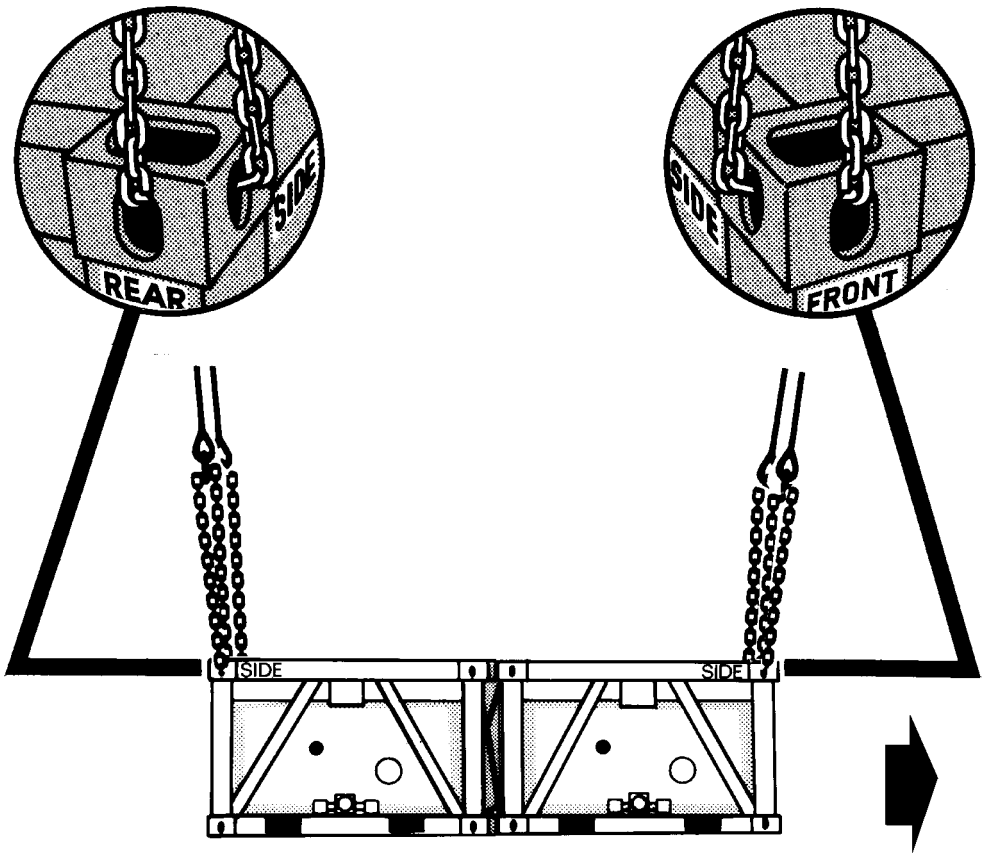

RIGGING STEPS

NOTE: All sling sets use the same link count

1. Place two sling legs on apex fitting number 1. Position apex fitting number 1 on top of the front module.

2. Loop the chain end of the left and right sling legs through the front and side of their respective lift provisions located on the top front corners of the module. Place the correct link from Table 9-1 in the grab hook.

3. Place two sling legs on apex fitting number 2. Position apex fitting number 2 on top of the rear module.

4. Loop the chain end of the left and right sling legs through the rear and side of their respective lift provisions located on the top rear corners of the module. Place the correct link from Table 9-1 in the grab hook.

5. Raise the apex fittings above the tractor. Cluster and tie or tape (breakaway technique) the sling legs in each sling set together to prevent entanglement during hookup and lift-off.

Figure 9-1. Two Storage Modules, Fuel/Water (Side by Side)

9-3. Three Storage Modules, Fuel/Water (Side by Side)

a. Applicability. The following items in Table 9-2 are certified for the helicopter(s) listed in the following table by the US Army Soldier Systems Center:

Table 9-2. Three Storage Modules, Fuel/Water (Side by Side)

NOMENCLATURE	MAX WEIGHT (POUNDS)	SLING SET	LINK COUNT FRONT/ REAR	TYPE OF AIRCRAFT	RECOMMENDED AIRSPEED (KNOTS)
Three Sixcon Storage Modules, Fuel/Water, TAMCN B2085/B2086 (Empty), Side by Side	8,300	15K	3/3	CH-53	120
Two Full Sixcon Storage Modules, Fuel/Water, TAMCN B2085/B2086 and One Empty Sixcon Storage Module, Side by Side	22,900	40K	3/3	CH-53	120
Two Empty Sixcon Storage Modules, Fuel/Water, TAMCN B2085/B2086 and One Full Sixcon Storage Module, Side by Side	15,600	40K	3/3	CH-53	120
Two Full Sixcon, Storage Modules, Fuel/Water, TAMCN B2085/B2086 and One Sixcon Pump Module, Fuel/Water, TAMCN B1580/B1581, Side by Side	22,500	40K	3/3	CH-53	120
Two Empty Sixcon, Storage Modules, Fuel/Water, TAMCN B2085/B2086and One Sixcon Pump Module, Fuel/Water, TAMCN B1580/B1581, Side by Side	7,900	15K	3/3	CH-53	120
One Full Sixcon, Storage Modules, Fuel/Water, TAMCN B2085/B2086 and Two Sixcon Pump Modules, Fuel/Water, TAMCN B1580/B1581, Side by Side	14,800	15K	3/3	CH-53	120
One Empty Sixcon, Storage Modules, Fuel/Water, TAMCN B2085/B2086and Two Sixcon Pump Modules, Fuel/Water, TAMCN B1580/B1581, Side by Side	7,500	15K	3/3	CH-53	120
Three Sixcon Pump Modules, Fuel/Water, TAMCN B1580/B1581, Side by Side	7,100	15K	3/3	CH-53	120
One Full and One Empty Sixcon, Storage Modules, Fuel/Water, TAMCN B2085/B2086and One Sixcon Pump Module, Fuel/Water, TAMCN B1580/B1581, Side by Side	15,200	40K	3/3	CH-53	120

NOTE: The configurations below are the only certified configurations.

1. **Empty Storage/Empty Storage/Empty Storage**
2. **Full Storage/Empty Storage/Full Storage**
3. **Empty Storage/Full Storage/Empty Storage**
4. **Full Storage/Pump/Full Storage**
5. **Empty Storage/Pump/Empty Storage**
6. **Pump/Full Storage/Pump**
7. **Pump/Empty Storage/Pump**
8. **Pump/Pump/Pump**
9. **Pump/Full Storage/Empty Storage**

b. Materials. The following materials are required to rig this load:

(1) Sling set (15,000-pound capacity) (2 each).

OR

(2) Sling set (40,000-pound capacity) with one additional apex fitting.

(3) Tape, adhesive, pressure-sensitive, 2-inch wide roll.

(4) Cord, nylon, Type III, 550-pound breaking strength.

(5) Webbing, cotton, 1/4-inch, 80-pound breaking strength.

c. Personnel. Two persons can prepare and rig this load in 15 minutes.

d. Procedures. The following procedures apply to this load:

(1) Preparation. Prepare the load using the following steps:

CAUTION

The Tandemloc horizontal connector, MFR Part NO. 712946-M-PZN, NSN 5410-01-363-7086, must be used to secure the Sixcons together. DO NOT USE ANY OTHER TYPE OF CONNECTOR.

(a) Connect the three modules together side by side using the horizontal connectors. Ensure the connectors are properly secured.

(b) Ensure the modules are either completely full or empty and in one of the configurations shown in the note after Table 9-2.

(c) Secure all hatches, hose valves, and loose equipment with tape or Type III nylon cord.

(2) Rigging. Rig the load according to the steps in Figure 9-2.

NOTE: When using the 15,000-pound capacity multileg sling set, tie or tape the inner sling legs to the outer sling legs.

(3) Hookup. Two hookup teams are required for this load. The static discharge person discharges the static electricity. The forward hookup person stands on top of the front module and places apex fitting 1 onto the forward cargo hook. The aft hookup person stands on the top of the rear module and places apex fitting 2 onto the aft cargo hook. The hookup teams then carefully dismount the load and remain close to the load as the helicopter removes slack from the sling legs. When successful hookup is assured, the hookup teams quickly exit the area underneath the helicopter to the designated rendezvous point.

(4) Derigging. Derigging is the reverse of the preparation and rigging procedures in steps d (1) and d (2).

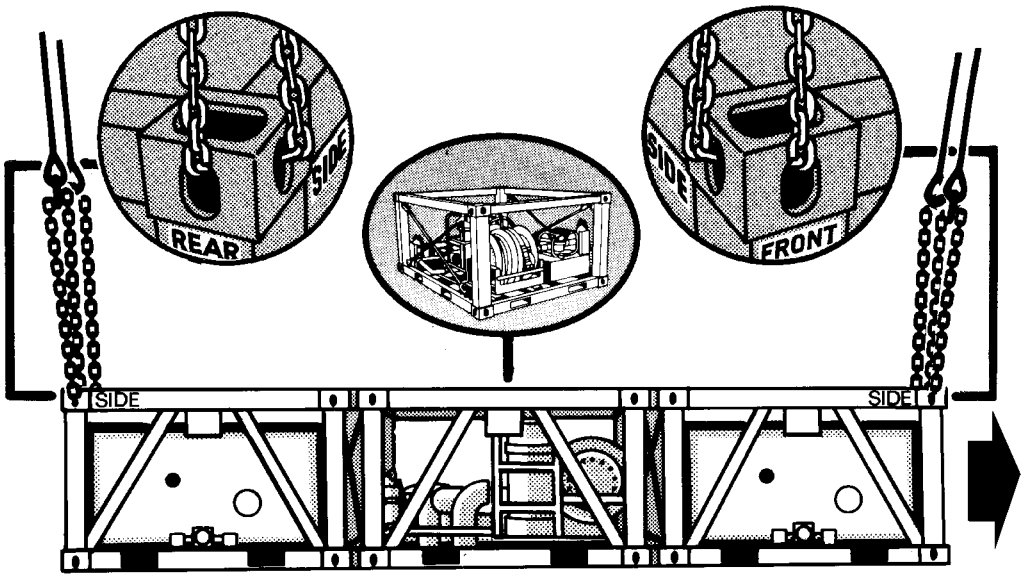

RIGGING STEPS

NOTE: All sling sets use the same link count

1. Place two sling legs on apex fitting number 1. Position apex fitting number 1 on top of the front module.

2. Loop the chain end of the left and right sling legs through the front and side of their respective lift provisions located on the top front corners of the module. Place the correct link from Table 9-2 in the grab hook.

3. Place two sling legs on apex fitting number 2. Position apex fitting number 2 on top of the rear module.

4. Loop the chain end of the left and right sling legs through the rear and side of their respective lift provisions located on the top rear corners of the module. Place the correct link from Table 9-2 in the grab hook.

5. Raise the apex fittings above the tractor. Cluster and tie or tape (breakaway technique) the sling legs in each sling set together to prevent entanglement during hookup and lift-off.

Figure 9-2. Three Modules, Fuel/Water (Side by Side)

9-4. Five 500-Gallon Fuel Drums

a. Applicability. The following item in Table 9-3 is certified for the helicopter(s) listed in the following table by the US Army Soldier Systems Center:

Table 9-3. Five 500-Gallon Fuel Drums

NOMENCLATURE	MAX WEIGHT (POUNDS)	SLING SET	LINK COUNT FRONT/-REAR	OF AIRCRAFT	RECOMMENDED AIRSPEED (KNOTS)
Drum, Fabric, Fuel, 500-Gallon	18,825	25K	3/3/3/3	CH-47	100

CAUTION
The Maximum weight listed is based on fuel drums filled to capacity with JP-8. Filling drums to capacity with other fluids of higher density, such as water, will result in higher weights that may overload the aircraft.

b. Materials. The following materials are required to rig this load:

(1) Sling set (25,000-pound capacity) (2 each).

(2) Tape, adhesive, pressure-sensitive, 2-inch wide roll.

(3) Cord, nylon, Type III, 550-pound breaking strength.

(4) Webbing, cotton, 1/4-inch, 80-pound breaking strength.

c. Personnel. Two persons can prepare and rig this load in 15 minutes.

d. Procedures. The following procedures apply to this load:

(1) Preparation. Prepare the load using the following steps:

(a) Align the drums side by side in a row.

(b) Ensure lifting clevises are serviceable.

(c) Rotate the drum hub so a clevis is on top.

(2) Rigging. Rig the load according to the steps in Figure 9-3.

(3) Hookup. Two hookup teams are required for this load. The hookup teams stand beside the load. The static discharge person discharges the static electricity. The forward hookup person places apex fitting 1 onto the forward cargo hook. The aft hookup person places apex fitting 2 onto the aft cargo hook. The hookup teams then carefully dismount the load and remain close to the load as the helicopter removes slack from the sling legs. When successful hookup is assured, the hookup teams quickly exit the area underneath the helicopter to the designated rendezvous point.

(4) Derigging. Derigging is the reverse of the preparation and rigging procedures in steps d (1) and d (2).

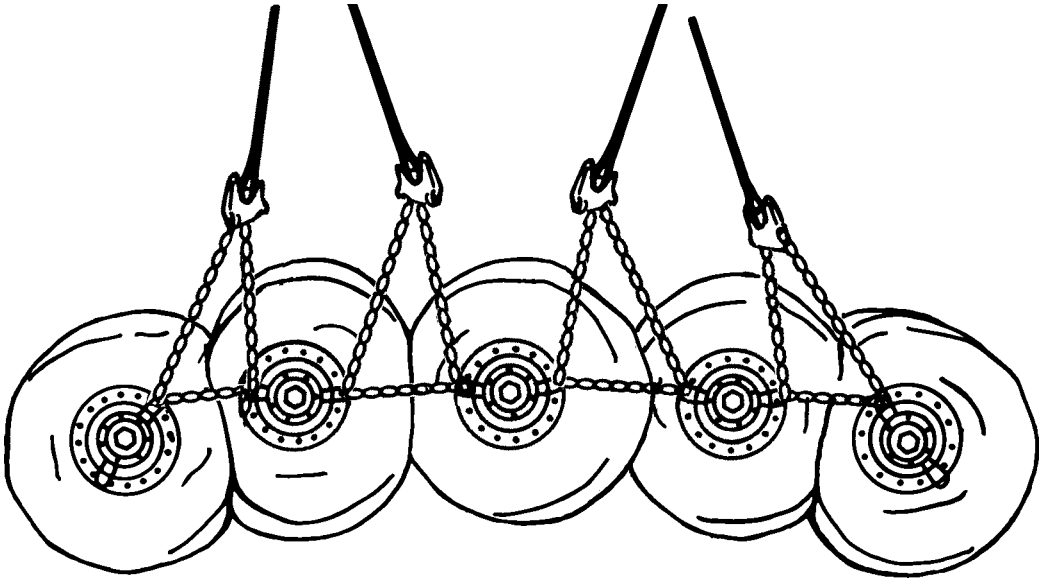

RIGGING STEPS

1. Position apex fitting number 1 on top of the second drum.

2. Route outer sling legs 1 and 2 to the first and second drums. Loop the chain end of sling leg 1 through the clevis on the left hub of the first drum, over and through the clevis of the second drum. Place the correct link from Table 9-3 in the grab hook. Repeat with sling leg 2 on the other side of the drums.

3. Route inner sling legs 3 and 4 of the first sling set to the second and third drums. Loop the chain end of sling leg 3 through the clevis on the left hub of the second drum, over and through the clevis of the third drum. Place the correct link from Table 9-3 in the grab hook. Repeat with sling leg 4 on the other side of the drums.

4. Position apex fitting number 2 on top of the fourth drum.

5. Route outer sling legs 1 and 2 to the third and fourth drums. Loop the chain end of sling leg 1 through the clevis on the left hub of the third drum, over and through the clevis of the fourth drum. Place the correct link from Table 9-3 in the grab hook. Repeat with sling leg 2 on the other side of the drums.

6. Route inner sling legs 3 and 4 of the second sling set to the fourth and fifth drums. Loop the chain end of sling leg 3 through the clevis on the left hub of the fourth drum, over and through the clevis of the fifth drum. Place the correct link from Table 9-3 in the grab hook. Repeat with sling leg 4 on the other side of the drums.

7. Raise the apex fittings above the drums. Cluster and tie or tape (breakaway technique) the sling legs in each sling set together to prevent entanglement during hookup and lift-off.

Figure 9-3. Five 500-Gallon Fuel Drums

CHAPTER 10

CERTIFIED DUAL-POINT RIGGING PROCEDURES FOR SHELTERS

10-1. INTRODUCTION

This chapter contains rigging procedures for dual-point lift of shelters that have been certified for sling load. Each rigging procedure is found in a paragraph that includes a description of the load, materials required for rigging, and steps to complete the procedure. An applicability paragraph is also a part of each paragraph and identifies the certified loads. The certified dual-point rigging procedures for shelters are in this section. Paragraphs 10-2 through 10-12 give detailed instructions for rigging loads.

NOTE: Reach Pendants may be used on dual point loads. Place a Reach Pendant on each apex fitting. A static discharge person is not required when using a Reach Pendant.

10-2. Communication or Electronic Systems Housed in S-250 Shelters

a. Applicability. The following items in Table 10-1 are certified for the helicopter(s) listed in the following table by the US Army Soldier Systems Center:

Table 10-1. S-250 Shelters

NOMENCLATURE	MAX WEIGHT (POUNDS)	SLING SET	LINK COUNT FRONT/ REAR	TYPE OF AIRCRAFT	RECOMMENDED AIRSPEED (KNOTS)
Sartellite Communications Shelter, AN/TSC-93B (V)1 or (V)2	3,250	10K	33/3	CH-47	100
Operation Control Group, AN/TPQ-36 Firefinder, Block II	2,200	10K	33/3	CH-47	90

b. Materials. The following materials are required to rig this load:

(1) Sling set (10,000-pound capacity) with one additional apex fitting.

(2) Tape, adhesive, pressure-sensitive, 2-inch wide roll.

(3) Cord, nylon, Type III, 550-pound breaking strength.

(4) Webbing, cotton, 1/4-inch, 80-pound breaking strength.

c. Personnel. Two persons can prepare and rig this load in 10 minutes.

d. Procedures. The following procedures apply to this load:

(1) Preparation. Prepare the load using the following steps:

(a) Remove and store all externally mounted equipment inside the shelter.

(b) Close and secure all doors, vents, hatches, and caps with tape or Type III nylon cord.

(c) Secure the Environmental Control Unit's cover with Type III nylon cord.

(2) Rigging. Rig the load according to the steps in Figure 10-1.

(3) Hookup. Two hookup teams stand on the roof of the shelter. The static discharge person discharges the static electricity. The forward hookup person (ECU end) places apex fitting 1 onto the forward cargo hook. The aft hookup person places apex fitting 2 onto the aft cargo hook. The hookup teams then carefully dismount the dozer and remain close to the load as the helicopter removes slack from the sling legs. When successful hookup is assured, the hookup teams quickly exit the area underneath the helicopter to the designated rendezvous point.

NOTE: Brief the helicopter crew to relax the sling leg tension and hover to the side of the load when releasing the apex fitting.

(4) Derigging. Derigging is the reverse of the preparation and rigging procedures in steps d (1) and d (2).

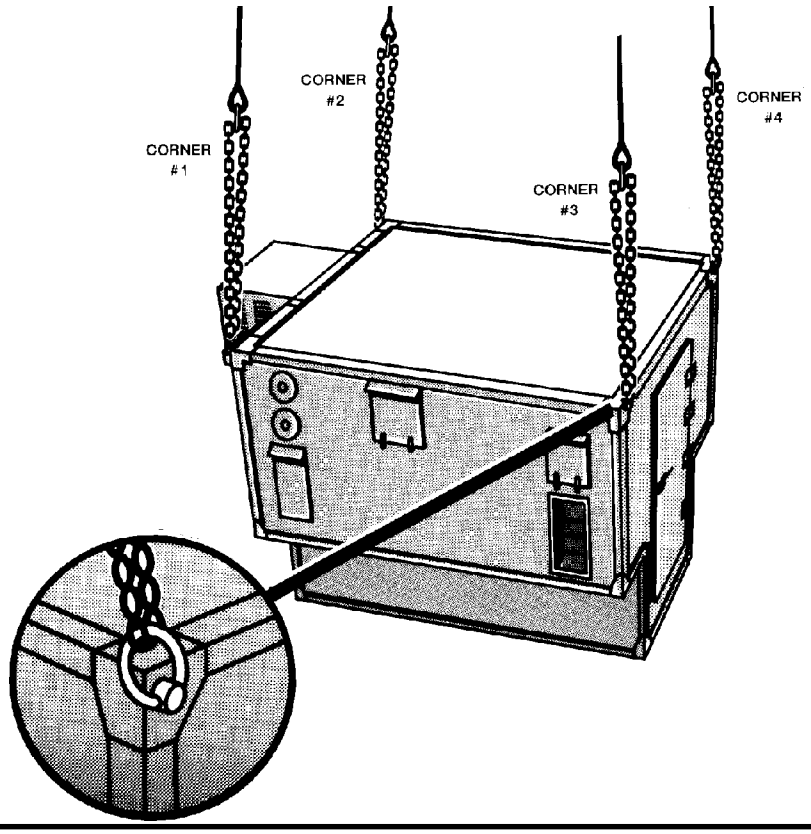

RIGGING STEPS

1. Place two sling legs on apex fitting number 1. Position apex fitting number 1 on top of the ECU end of the shelter.

2. Loop the chain end of the left and right sling legs through the front and side of their respective lift provisions located on the shelter corners. Place the correct link from Table 10-1 in the grab hook.

3. Place two sling legs on apex fitting number 2. Position apex fitting number 2 on top of the door end.

4. Loop the chain end of the left and right sling legs through the rear and side of their respective lift provisions located on the top shelter corners. Place the correct link from Table 10-1 in the grab hook.

5. Raise the apex fittings above the shelter. Cluster and tie or tape (breakaway technique) the sling legs in each sling set together to prevent entanglement during hookup and lift-off.

Figure 10-1. S-250 Shelters

10-3. Communication or Electronic Systems Housed in Lightweight Multipurpose Shelter (LMS)

a. Applicability. The following items in Table 10-2 are certified for the helicopter(s) listed in the following table by the US Army Soldier Systems Center:

Table 10-2. Lightweight Multipurpose Shelter

NOMENCLATURE	MAX WEIGHT (POUNDS)	SLING SET	LINK COUNT FRONT/ REAR	TYPE OF AIRCRAFT	RECOMMENDED AIRSPEED (KNOTS)
Operations Central Shelter, Firefinder, AN/TPQ-36(V)8, S-788	2,869	10K	ECU is the Front 20/3	CH-47	80
Biological Agent, Automatic, Integrated, Detection System, S-788	3,300	10K	Door is the Front 3/15	CH-47	100
Downsized Direct Support Section, Standard Integrated Command Post Systems, S-787/S-788	2,400	10K	ECU is the Front 3/3	CH-47 CH-53	70

b. Materials. The following materials are required to rig this load:

(1) Sling set (10,000-pound capacity) with one additional apex fitting.

(2) Tape, adhesive, pressure-sensitive, 2-inch wide roll.

(3) Cord, nylon, Type III, 550-pound breaking strength.

(4) Webbing, cotton, 1/4-inch, 80-pound breaking strength.

c. Personnel. Three persons can prepare and rig this load in 15 minutes.

d. Procedures. The following procedures apply to this load:

(1) Preparation. Prepare the load using the following steps:

(a) Secure all loose equipment inside the shelter with tape or Type III nylon cord.

(b) Close and secure all doors, vents, hatches, and caps with tape or Type III nylon cord.

(c) Secure the Environmental Control Unit's cover with tape or Type III nylon cord. Ensure the ECU frame mounting bolts are tight.

(d) Remove the SINGARS antennas and store and secure inside the shelter.

(e) Tie the front and aft lift provisions in the upright position.

(2) Rigging. Rig the load according to the steps in Figure 10-2.

(3) Hookup. Two hookup teams stand on the roof of the shelter. The static discharge person discharges the static electricity. The forward hookup person places apex fitting 1 onto the forward cargo hook. The aft hookup person places apex fitting 2 onto the aft cargo hook. The hookup teams then carefully dismount the load and remain close to the load as the helicopter removes slack from the sling legs. When successful hookup is assured, the hookup teams quickly exit the area underneath the helicopter to the designated rendezvous point.

NOTE: Brief the helicopter crew to relax the sling leg tension and hover to the side of the load when releasing the apex fitting.

(4) Derigging. Derigging is the reverse of the preparation and rigging procedures in steps d (1) and d (2).

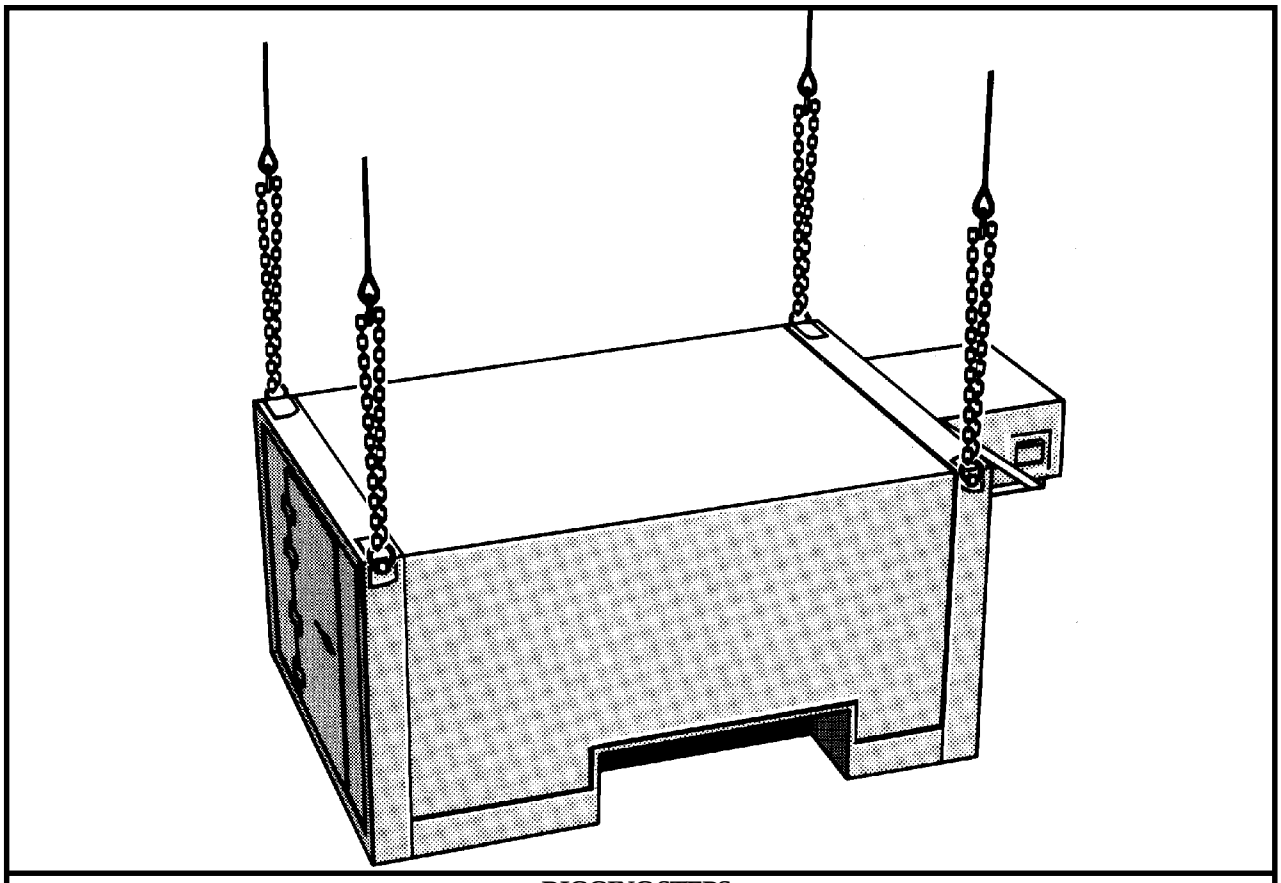

RIGGING STEPS

1. Place two sling legs on apex fitting number 1. Position apex fitting number 1 on top of the shelter.

2. Loop the chain end of the left and right sling legs through their respective lift provisions located on the front of the shelter. Place the correct link from Table 10-2 in the grab hook.

3. Place two sling legs on apex fitting number 2. Position apex fitting number 2 on top of the door end.

4. Loop the chain end of the left and right sling legs through their respective lift provisions located on the rear of the shelter. Place the correct link from Table 10-2 in the grab hook.

5. Raise the apex fittings above the shelter. Cluster and tie or tape (breakaway technique) the sling legs in each sling set together to prevent entanglement during hookup and lift-off.

Figure 10-2. Lightweight Multipurpose Shelter

10-4. Communication or Electronic Systems Housed in S-280 Shelters

a. Applicability. The following items in Table 10-3 are certified for the helicopter(s) listed in the following table by the US Army Soldier Systems Center:

Table 10-3. S-280 Shelters

NOMENCLATURE	MAX WEIGHT (POUNDS)	SLING SET	LINK COUNT FRONT/ REAR	TYPE OF AIRCRAFT	RECOMMENDED AIRSPEED (KNOTS)
Multiplexer Terminal Set, AN/TSQ-146(V)	6,190	10K	Door is Front 5/50	CH-47	120
Battery Servicing Shelter, AN/TSM-133	5,420	10K	Door is Front 3/30	CH-47	130
Repeater Set, Radio, AN/TRC-138A	4,720	10K	ECU is Front 3/32	CH-47	80
Radio Terminal Set, AN/TRC-173	3,790	10K	ECU is Front 3/32	CH-47	80
Repeater Set, Radio, AN/TRC-174	4,100	10K	ECU is Front 3/32	CH-47	80
Radio Terminal Set, AN/TRC-175	4,690	10K	ECU is Front 3/32	CH-47	80
Regency Net Force Terminal, AN/TRC-179(V)1	8,200	10K	Door is Front 3/30	CH-47	110
Meteorological Data System (MDS)	4,750	10K	ECU is Front 3/35	CH-47	130
Position Location Reporting System Master Station, AN/TSQ-129	6,050	15K	ECU is Front 3/25	CH-53	100
Enhanced Position Location Reporting System, Net Control Station, AN/TSQ-158	6,289	15K	ECU is Front 3/33	CH-53	100
Tactical Satellite Communications Terminal, AN/TSC-85B	6,200	10K	Door is Front 3/33	CH-47	100
IFTE Base Shop Test Facility, (BSTF), Basic, S-280C/G, AN/TSM-191(V)3	7,806	10K	ECU is Front 3/3	CH-47	120
IFTE Base Shop Test Facility, (BSTF), HAWK, S-280C/G, AN/TSM-191(V)2	7,748	10K	ECU is Front 3/3	CH-47	120

Table 10-3. S-280 Shelters (continued)

NOMENCLATURE	MAX WEIGHT (POUNDS)	SLING SET	LINK COUNT FRONT/ REAR	TYPE OF AIRCRAFT	RECOMMENDED AIRSPEED (KNOTS)
IFTE 60 Hz Storage Shelter, S-280C/G, S-744/TSM-191V	6,365	10K	ECU is Front 3/3	CH-47	110
IFTE 400 Hz Storage Shelter, S-280C/G, S-175/TSM-191V	5,119	10K	ECU is Front 3/3	CH-47	110
Communications Nodal Control Element (CNCE), AN/TSQ-111	10,000	25K	Door is Front 3/24	CH-47	120
Airborne Reconnaissance Low-Imagery (ARL-I), and Airborne Reconnaissance Low-Comint (ARL-C), Fly Away Kits, Types A1/B1/C1	8,500	10K	ECU is Front 3/15	CH-47	80
Joint Stars MGSM LRIP Shelter System, OA-9408/TSQ-168(V)1	8,700	10K	Door is Front 3/30	CH-47	100
E0145 Bottle Cleaning and Charging Station	6,400	15K	Door is Front 3/25	CH-53	70
E1022 Maintenance Facility Night Sight	6,400	15K	Door is Front 3/25	CH-53	70
Central Office, Telephone, Automatic, AN/TTC-42(V)	5,700	15K	Door is Front 3/25	CH-53	60
Airborne Mobile Direct Air Support Central (DASC), AN/UYQ-3A	5,600	15K	Door is Front 3/25	CH-53	60
AN/TYA-16B	3,325	15K	Door is Front 3/3	CH-53	60

b. Materials. The following materials are required to rig this load:

(1) Sling set (as listed in Table 10-3) with one additional apex fitting.

OR

(2) Sling set (15,000-pound capacity) (2 each).

(3) Tape, adhesive, pressure-sensitive, 2-inch wide roll.

(4) Cord, nylon, Type III, 550-pound breaking strength.

(5) Webbing, cotton, 1/4-inch, 80-pound breaking strength.

(6) Webbing, nylon, tubular, 1/2-inch, 1000-pound breaking strength.

c. Personnel. Two persons can prepare and rig this load in 15 minutes.

d. Procedures. The following procedures apply to this load:

(1) Preparation. Prepare the load using the following steps:

(a) Secure all loose equipment inside the shelter with tape or Type III nylon cord.

(b) Close and secure all doors, vents, hatches, and caps with tape or Type III nylon cord.

(c) Secure the Environmental Control Unit's cover with tape or Type III nylon cord. Ensure the ECU frame mounting bolts are tight.

(d) Secure any external hoses, cables, ladders, and power unit components with tape or Type III nylon cord.

(e) Tie the front and aft lift provisions in the upright position.

(2) Rigging. Rig the load according to the steps in Figure 10-3.

(3) Hookup. Two hookup teams stand on the roof of the shelter. The static discharge person discharges the static electricity. The forward hookup person places apex fitting 1 onto the forward cargo hook. The aft hookup person places apex fitting 2 onto the aft cargo hook. The hookup teams then carefully dismount the load and remain close to the load as the helicopter removes slack from the sling legs. When successful hookup is assured, the hookup teams quickly exit the area underneath the helicopter to the designated rendezvous point.

NOTE: Brief the helicopter crew to relax the sling leg tension and hover to the side of the load when releasing the apex fitting.

(4) Derigging. Derigging is the reverse of the preparation and rigging procedures in steps d (1) and d (2).

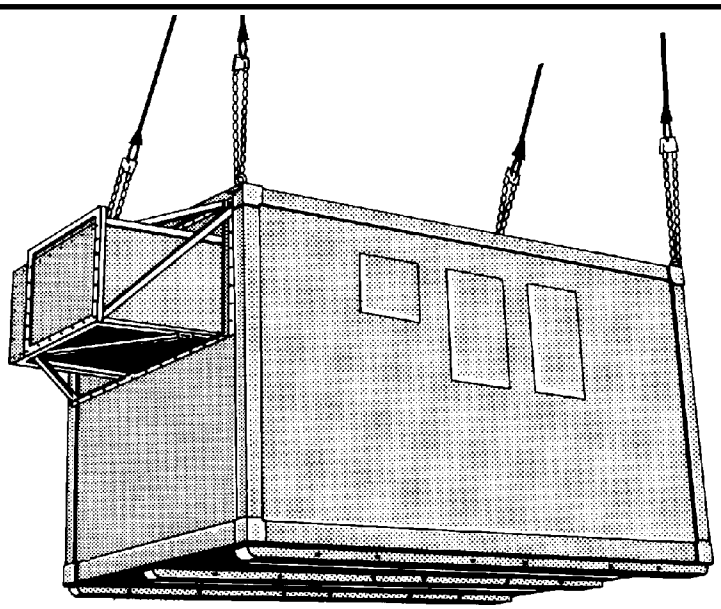

RIGGING STEPS

1. Place two sling legs on apex fitting number 1. Position apex fitting number 1 on top of the shelter.

2. Loop the chain end of the left and right sling legs through their respective lift provisions located on the shelter corners. Place the correct link from Table 10-3 in the grab hook.

3. Place two sling legs on apex fitting number 2. Position apex fitting number 2 on top of the shelter.

4. Loop the chain end of the left and right sling legs through their respective lift provisions located on the shelter corners. Place the correct link from Table 10-3 in the grab hook. Secure the excess chain with tape or Type III nylon cord.

5. Raise the apex fittings above the shelter. Cluster and tie or tape (breakaway technique) the sling legs in each sling set together to prevent entanglement during hookup and lift-off.

Figure 10-3. S-280 Shelters

10-5. 8-x 8-x 10-Foot Shelters

a. Applicability. The following items in Table 10-4 are certified for the helicopter(s) listed in the following table by the US Army Soldier Systems Center:

Table 10-4. 8-x 8-x 10-Foot Shelters

NOMENCLATURE	MAX WEIGHT (POUNDS)	SLING SET	LINK COUNT FRONT/ REAR	TYPE OF AIRCRAFT	RECOMMENDED AIRSPEED (KNOTS)
EMI, TAMCN C6110	7,700 Full WeightOnly	15K	Door is Front 5/5	CH-53	50
Electronic EMI HSOP Shelter	4,140	15K	Door is Front 10/3	CH-53	50
Air Radar Shelter, AN/TPS-73	14,500	40K	Door is Front 3/12	CH-53	50
Air Radar Shelter, AN/TPS-63B	7,360	15K	Door is Front 3/20	CH-53	70
Rigid EMD Communications Shelter	Required 7,000	15K	Door is Front 3/3	CH-53	50

b. Materials. The following materials are required to rig this load:

(1) Sling set (40,000-pound capacity) with one additional apex fitting.

OR

(2) Sling set (15,000-pound capacity) (2 each).

(3) Tape, adhesive, pressure-sensitive, 2-inch wide roll.

(4) Cord, nylon, Type III, 550-pound breaking strength.

(5) Webbing, cotton, 1/4-inch, 80-pound breaking strength.

c. Personnel. Two persons can prepare and rig this load in 15 minutes.

d. Procedures. The following procedures apply to this load:

(1) Preparation. Prepare the load using the following steps:

(a) Secure all loose equipment inside the shelter with tape or Type III nylon cord.

(b) Close and secure all doors, vents, hatches, and caps with tape or Type III nylon cord.

(c) Secure the Environmental Control Unit's cover with tape or Type III nylon cord. Ensure the ECU frame mounting bolts are tight.

(d) Secure any external hoses, cables, ladders, and power unit components with tape or Type III nylon cord.

(2) Rigging. Rig the load according to the steps in Figure 10-4.

NOTE: When using the 15,000-pound capacity multileg sling set, tie or tape the inner sling legs to the outer sling legs.

(3) Hookup. Two hookup teams stand on the roof of the shelter. The static discharge person discharges the static electricity. The forward hookup person places apex fitting 1 onto the forward cargo hook. The aft hookup person places apex fitting 2 onto the aft cargo hook. The

hookup teams then carefully dismount the load and remain close to the load as the helicopter removes slack from the sling legs. When successful hookup is assured, the hookup teams quickly exit the area underneath the helicopter to the designated rendezvous point.

NOTE: Brief the helicopter crew to relax the sling leg tension and hover to the side of the load when releasing the apex fitting.

(4) Derigging. Derigging is the reverse of the preparation and rigging procedures in steps d (1) and d (2).

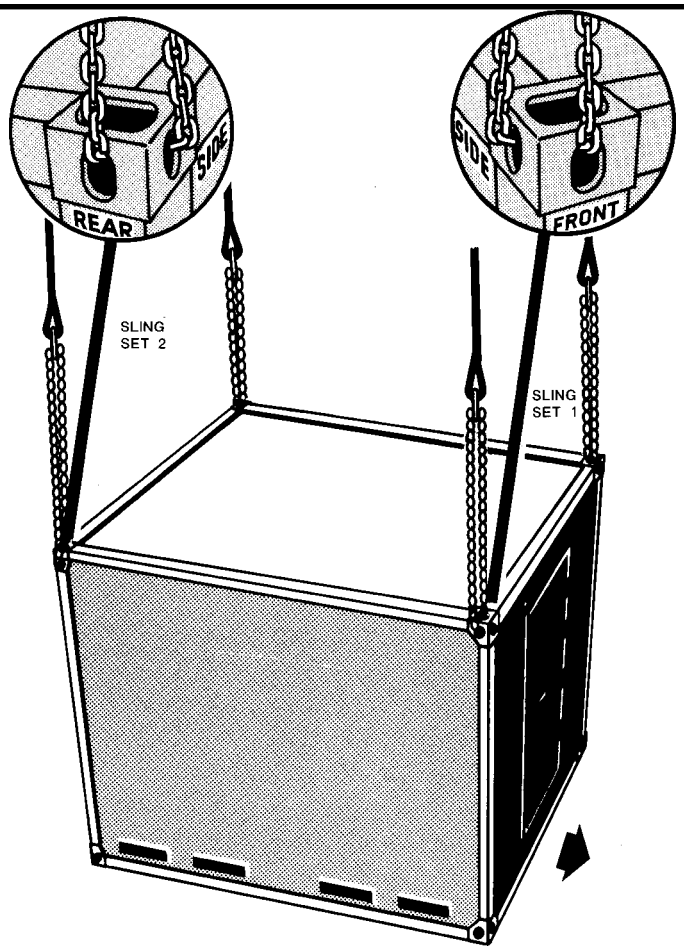

RIGGING STEPS

1. Place two sling legs on apex fitting number 1. Position apex fitting number 1 on top of the shelter.

2. Loop the chain end of the left and right sling legs through their respective lift provisions located on the shelter corners. Place the correct link from Table 10-4 in the grab hook.

3. Place two sling legs on apex fitting number 2. Position apex fitting number 2 on top of the shelter.

4. Loop the chain end of the left and right sling legs through their respective lift provisions located on the shelter corners. Place the correct link from Table 10-4 in the grab hook. Secure the excess chain with tape or Type III nylon cord.

5. Raise the apex fittings above the shelter. Cluster and tie or tape (breakaway technique) the sling legs in each sling set together to prevent entanglement during hookup and lift-off.

Figure 10-4. 8-x 8-x 10-Foot Shelters

10-6. 8-x 8-x 20-Foot Shelters

a. Applicability. The following items in Table 10-5 are certified for the helicopter(s) listed in the following table by the US Army Soldier Systems Center:

Table 10-5. 8-x 8-x 20-Foot Shelters

NOMENCLATURE	MAX WEIGHT (POUNDS)	SLING SET	LINK COUNT FRONT/ REAR	TYPE OF AIRCRAFT	RECOMMENDED AIRSPEED (KNOTS)
Communications Central, AN/TGC-37	16,733	40K	Door is Aft 30/30	CH-53	80
Rigid Shelter, General Purpose, TAMCN C6122	15,000	40K	Door is Front 10/5	CH-53	75
Electromechanical Induction (EMI)	15,000	40K	Door is Front 10/5	CH-53	70
Tactical Air Operations Module (TAOM), AN/TYQ-23	16,175	40K	Door is Front 16/3	CH-53	100
Tactical Air Operations Module (TAOM), AN/TYQ-23, Up Graded	15,187	40K	Door is Front 16/3	CH-53	100
Maintenance Repair Group Shelter, AN/TSM-170	10,900	15K	Door is Front 31/3	CH-53	90
Radar Surveillance Center, AN/TSQ-107	9,950	15K	Door is Front 21/3	CH-53	70
Control and Communications Shelter, AN/TSQ-131	14,050	40K	Door is Front 21/3	CH-53	80
Non-Divisional AVIM Shop, Machine/ Welding Shop	Min-11,000 Max-13,200	25K	5/5	CH-47	120
Non-Divisional AVIM Shop, Pneudraulics Shop	Min-11,000 Max-13,200	25K	5/5	CH-47	120
Non-Divisional AVIM Shop, Power Train Shop	Min-11,000 Max-13,200	25K	Door is Aft 5/5	CH-47	120
Non-Divisional AVIM Shop, Engine Shop	Min-11,000 Max-13,200	25K	Door is Aft 5/5	CH-47	120
Non-Divisional AVIM Shop, Sheet Metal / Paint Shop	Min-11,000 Max-13,200	25K	Door is Aft 5/5	CH-47	120
Non-Divisional AVIM Shop, Tool Crib Shop	Min-11,000 Max-13,200	25K	Door is Aft 5/5	CH-47	120
Non-Divisional AVIM Shop, Propeller / Rotor Shop	Min-11,000 Max-13,200	25K	Door is Aft 5/5	CH-47	120

Table 10-5. 8-x 8-x 20-Foot Shelters (continued)

NOMENCLATURE	MAX WEIGHT (POUNDS)	SLING SET	LINK COUNT FRONT/ REAR	TYPE OF AIRCRAFT	RECOMMENDED AIRSPEED (KNOTS)
Non-Divisional AVIM Shop, Electrical / Instrument Shop	Min-11,000 Max-13,200	25K	Door is Aft 5/5	CH-47	120
Non-Divisional AVIM Shop, Production / Quality Control Shop	Min-11,000 Max-13,200	25K	Door is Aft 5/5	CH-47	120
AN/TSQ-108A(V)2	13,050	15K	ECU is Aft 3-20	CH-53	80
Improved Direct Air Support Center	10,000	15K	Door is Front 9-Left Side 3-Right Side	CH-53	70
Shop Set, Maintenance Facility Night Sight, E1713	8,400	15K	Door is Front 3/35	CH-53	80
Shop Set, Maintenance Artillery, E1712	8,400	15K	Door is Front 3/35	CH-53	80
Shop Set, Maintenance Small Arms, E1714	8,400	15K	Door is Front 3/40	CH-53	80
Trojan Transportable Mini-Switch (TTMS) ISO Shelter	14,700	25K	Door is Front 3/3	CH-47	75
EMI, EMC, S717T, Communications, TAMCN A2336	6,400	15K	Door is Front 3/3	CH-53	80
Non-Expandable Communications, TAMCN A2337	10,000	15K	Door is Front 3/3	CH-53	80
Tactical Reconnaissance Processing Evaluation System (TERPES)	13,200	15K	Door is Front 15/3	CH-53	80
Trojan Air Transportable Electronic Reconnaissance System (TATERS), SCINS Communications Subsystem Shelter	13,320	25K	Data Plate is Front 3/20	CH-47	110
Trojan Air Transportable Electronic Reconnaissance System (TATERS), CHIPS Receiver Group Shelter	14,220	25K	Data Plate is 3/20	CH-47	90
Trojan Air Transportable Electronic Reconnaissance System (TATERS), PEELS Electric Power Plant Shelter	15,100	25K	Data Plate is Front 3/20	CH-47	80
Trojan Air Transportable Electronic Reconnaissance System (TATERS), TOTS Nonexpandable Shelter	10,720	25K	Data Plate is Front 3/20	CH-47	60
Containerized Shower (CS)	10,070	25K	Data Plate is Front 3/20	CH-47	60

b. Materials. The following materials are required to rig this load:

(1) Sling set (as listed in Table 10-5) with one additional apex fitting.

OR

(2) Sling set (15,000-pound capacity) (2 each).

(3) Tape, adhesive, pressure-sensitive, 2-inch wide roll.

(4) Cord, nylon, Type III, 550-pound breaking strength.

(5) Webbing, cotton, 1/4-inch, 80-pound breaking strength.

c. Personnel. Two persons can prepare and rig this load in 20 minutes.

d. Procedures. The following procedures apply to this load:

(1) Preparation. Prepare the load using the following steps:

(a) Secure all loose equipment inside the shelter with tape or Type III nylon cord.

(b) Close and secure all doors, vents, hatches, and caps with tape or Type III nylon cord.

(c) Secure the Environmental Control Unit's cover with tape or Type III nylon cord. Ensure the ECU frame mounting bolts are tight.

(2) Rigging. Rig the load according to the steps in Figure 10-5.

NOTE: When using the 15,000-pound capacity multileg sling set, tie or tape the inner sling legs to the outer sling legs.

(3) Hookup. Two hookup teams stand on the roof of the shelter. The static discharge person discharges the static electricity. The forward hookup person places apex fitting 1 onto the forward cargo hook. The aft hookup person places apex fitting 2 onto the aft cargo hook. The hookup teams then carefully dismount the load and remain close to the load as the helicopter removes slack from the sling legs. When successful hookup is assured, the hookup teams quickly exit the area underneath the helicopter to the designated rendezvous point.

NOTE: Brief the helicopter crew to relax the sling leg tension and hover to the side of the load when releasing the apex fitting.

(4) Derigging. Derigging is the reverse of the preparation and rigging procedures in steps d (1) and d (2).

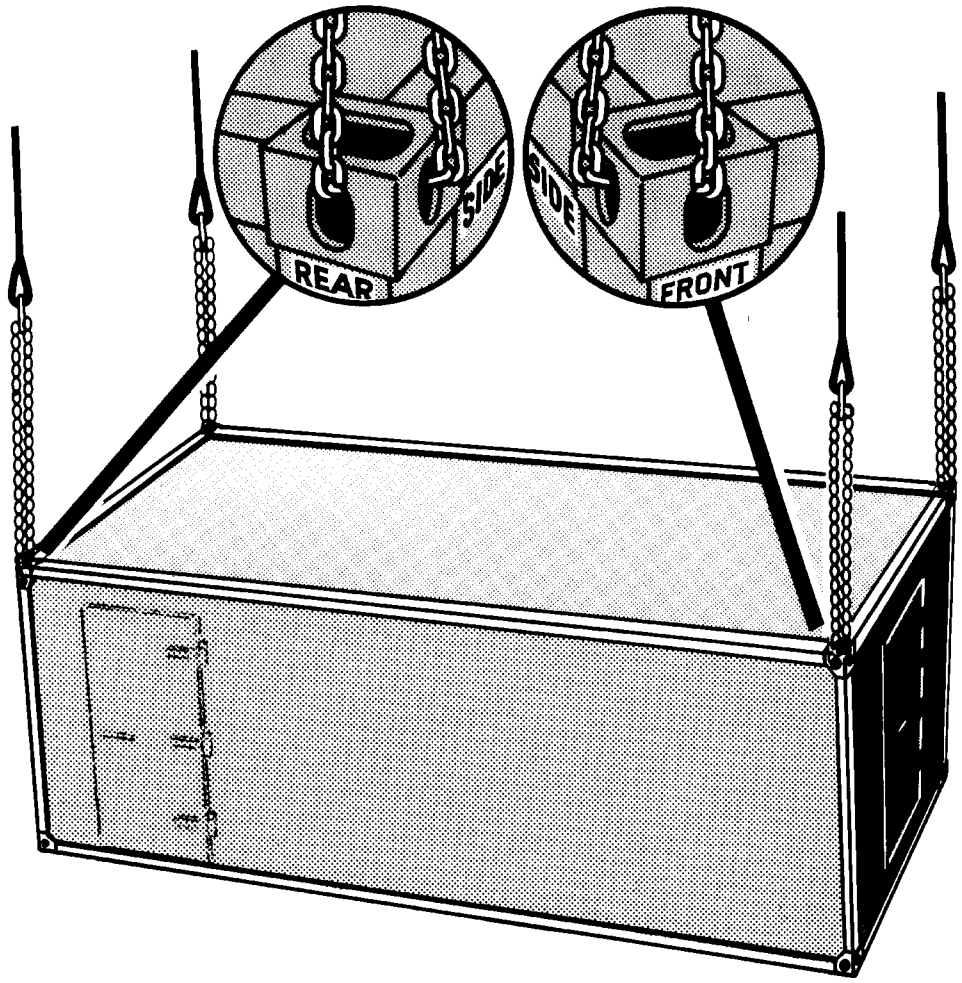

RIGGING STEPS

1. Place two sling legs on apex fitting number 1. Position apex fitting number 1 on top of the shelter.

2. Loop the chain end of the left and right sling legs through their respective lift provisions located on the front shelter corners. Place the correct link from Table 10-5 in the grab hook.

3. Place two sling legs on apex fitting number 2. Position apex fitting number 2 on top of the shelter.

4. Loop the chain end of the left and right sling legs through their respective lift provisions located on the aft shelter corners. Place the correct link from Table 10-5 in the grab hook. Secure the excess chain with tape or Type III nylon cord.

5. Raise the apex fittings above the shelter. Cluster and tie or tape (breakaway technique) the sling legs in each sling set together to prevent entanglement during hookup and lift-off.

Figure 10-5. 8-x 8-x 20-Foot Shelters

10-7. AN/TYC-5A Data Communications Terminal

a. Applicability. The following item in Table 10-6 is certified for the helicopter(s) listed in the following table by the US Army Soldier Systems Center:

Table 10-6. AN/TYC-5A Data Communications Terminal

NOMENCLATURE	MAX WEIGHT (POUNDS)	SLING SET	LINK COUNT FRONT/ REAR	TYPE OF AIRCRAFT	RECOMMENDED AIRSPEED (KNOTS)
Data Communications Terminal, AN/TYC-5A	7,451	15K	Door is Front 5/20	CH-53	50

b. Materials. The following materials are required to rig this load:

(1) Sling set (15,000-pound capacity) (2 each).

(2) Tape, adhesive, pressure-sensitive, 2-inch wide roll.

(3) Cord, nylon, Type III, 550-pound breaking strength.

(4) Webbing, cotton, 1/4-inch, 80-pound breaking strength.

c. Personnel. Two persons can prepare and rig this load in 10 minutes.

d. Procedures. The following procedures apply to this load:

(1) Preparation. Prepare the load using the following steps:

(a) Secure all loose equipment inside the shelter with tape or Type III nylon cord.

(b) Close and secure all doors, vents, hatches, and caps with tape or Type III nylon cord.

(c) Remove the transporter dolly lift sets if attached to the shelter.

(2) Rigging. Rig the load according to the steps in Figure 10-6.

NOTE: When using the 15,000-pound capacity multileg sling set, tie or tape the inner sling legs to the outer sling legs.

(3) Hookup. Two hookup teams stand on the roof of the shelter. The static discharge person discharges the static electricity. The forward hookup person (door end) places apex fitting 1 onto the forward cargo hook. The aft hookup person places apex fitting 2 onto the aft cargo hook. The hookup teams then carefully dismount the load and remain close to the load as the helicopter removes slack from the sling legs. When successful hookup is assured, the hookup teams quickly exit the area underneath the helicopter to the designated rendezvous point.

NOTE: Brief the helicopter crew to relax the sling leg tension and hover to the side of the load when releasing the apex fitting.

(4) Derigging. Derigging is the reverse of the preparation and rigging procedures in steps d (1) and d (2).

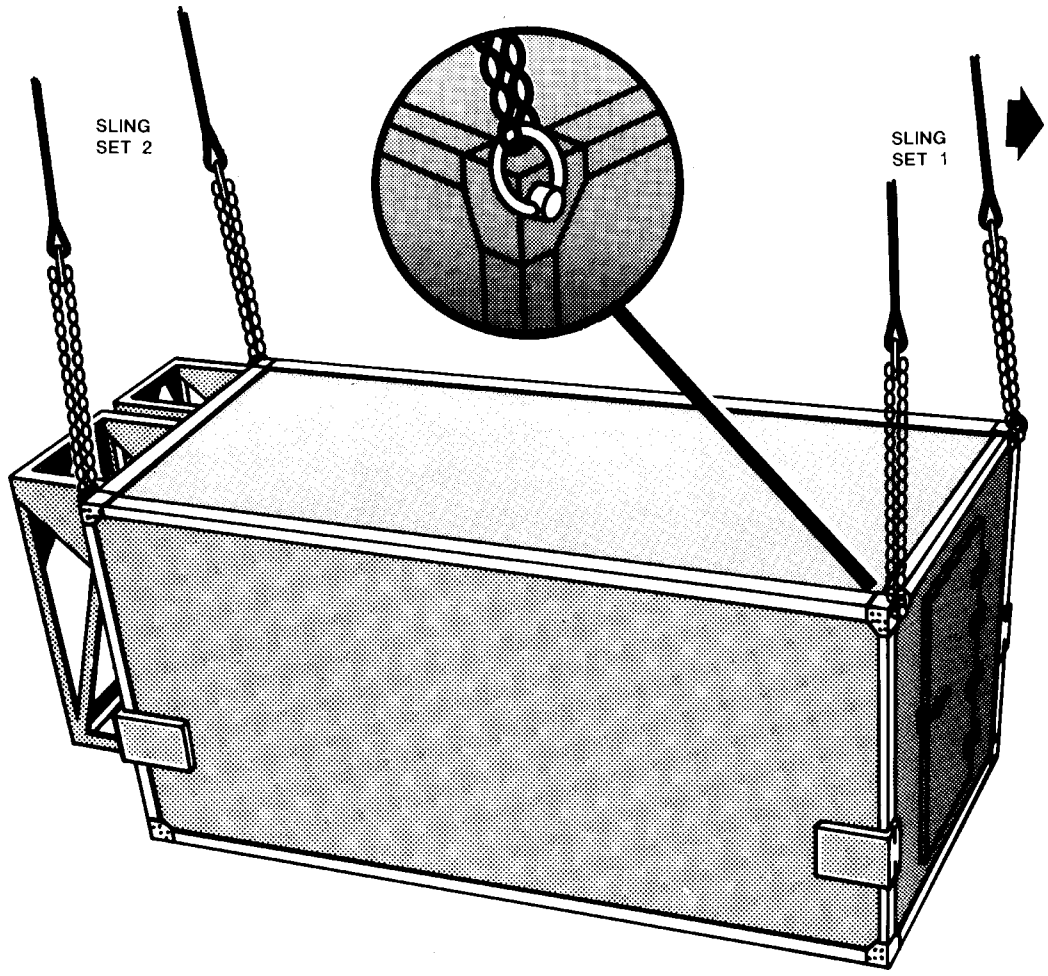

RIGGING STEPS

1. Position sling set number 1 on top of the door end of the shelter.

2. Loop the chain end of the left and right sling legs through their respective lift provisions located on the shelter corners. Place the correct link from Table 10-6 in the grab hook.

3. Position sling set number 2 on top of the shelter.

4. Loop the chain end of the left and right sling legs through their respective lift provisions located on the shelter corners. Place the correct link from Table 10-6 in the grab hook.

5. Raise the apex fittings above the shelter. Cluster and tie or tape (breakaway technique) the sling legs in each sling set together to prevent entanglement during hookup and lift-off.

Figure 10-6. AN/TYC-5A Data Communications Terminal

10-8. Shelter, Knockdown, 8- x 8- 20-Foot

a. Applicability. The following item in Table 10-7 is certified for the helicopter(s) listed in the following table by the US Army Soldier Systems Center:

Table 10-7. Shelter, Knockdown, 8- x 8- 20-Foot

NOMENCLATURE	MAX WEIGHT (POUNDS)	SLING SET	LINK COUNT FRONT/ REAR	TYPE OF AIRCRAFT	RECOMMENDED AIRSPEED (KNOTS)
Shelter, Knockdown, 8- x 8- 20-Foot	3,800	15K	5/10	CH-53	110

b. Materials. The following materials are required to rig this load:

(1) Sling set (15,000-pound capacity) (2 each).

(2) Tape, adhesive, pressure-sensitive, 2-inch wide roll.

(3) Cord, nylon, Type III, 550-pound breaking strength.

(4) Webbing, cotton, 1/4-inch, 80-pound breaking strength.

c. Personnel. Two persons can prepare and rig this load in 10 minutes.

d. Procedures. The following procedures apply to this load:

(1) Preparation. Prepare the load using the following steps:

(a) Ensure the shelter is properly knocked down and secured.

(b) Secure the knockdown shelter corner pins with tape.

(2) Rigging. Rig the load according to the steps in Figure 10-7.

NOTE: When using the 15,000-pound capacity multileg sling set, tie or tape the inner sling legs to the outer sling legs.

(3) Hookup. Two hookup teams stand on the shelter. The static discharge person discharges the static electricity. The forward hookup person places apex fitting 1 onto the forward cargo hook. The aft hookup person places apex fitting 2 onto the aft cargo hook. The hookup teams then carefully dismount the load and remain close to the load as the helicopter removes slack from the sling legs. When successful hookup is assured, the hookup teams quickly exit the area underneath the helicopter to the designated rendezvous point.

NOTE: Brief the helicopter crew to relax the sling leg tension and hover to the side of the load when releasing the apex fitting.

(4) Derigging. Derigging is the reverse of the preparation and rigging procedures in steps d (1) and d (2).

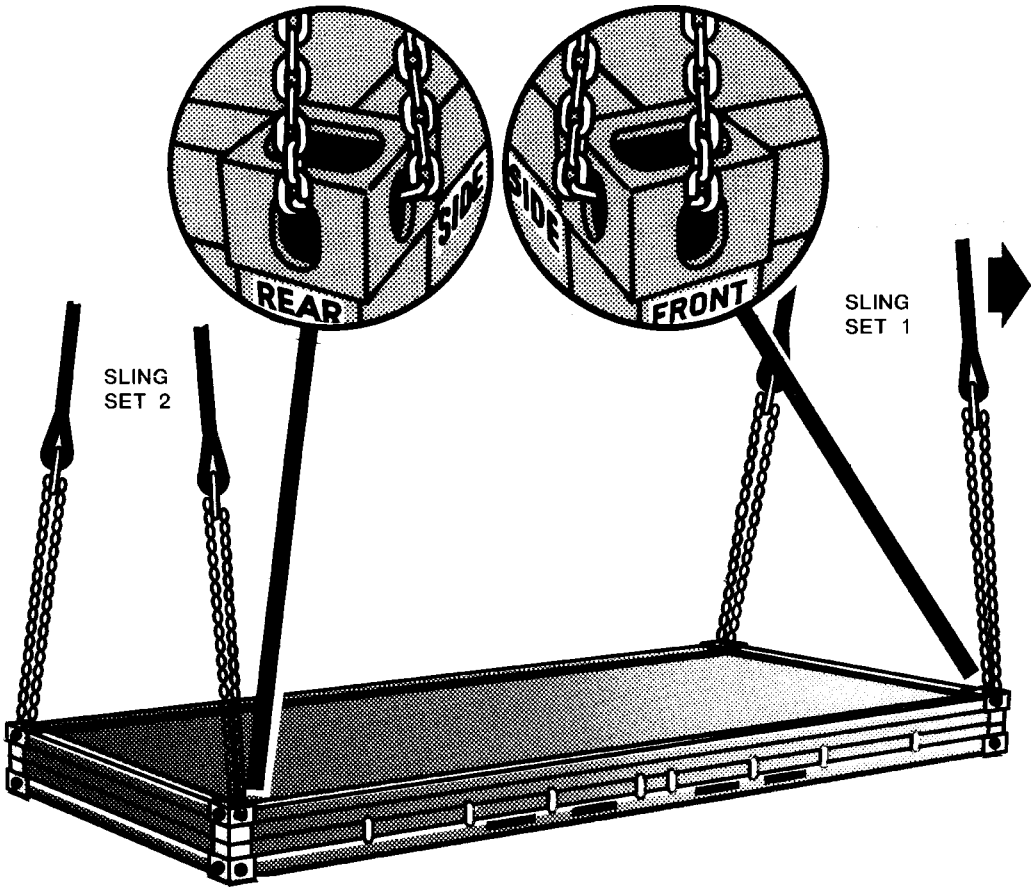

RIGGING STEPS

1. Position sling set number 1 on top of the shelter.

2. Loop the chain end of the left and right sling legs through the side and out the front of their respective lift provisions located on the shelter corners. Place the correct link from Table 10-7 in the grab hook.

3. Position sling set number 2 on top of the shelter.

4. Loop the chain end of the left and right sling legs through side and out the rear of their respective lift provisions located on the shelter corners. Place the correct link from Table 10-7 in the grab hook. Secure the excess chain with tape or Type III nylon cord.

5. Raise the apex fittings above the shelter. Cluster and tie or tape (breakaway technique) the sling legs in each sling set together to prevent entanglement during hookup and lift-off.

Figure 10-7. Shelter, Knockdown, 8- x 8- 20-Foot

10-9. Jam-Resistant Secure Communications (JRSC) Satellite Communications Terminal with Mobilizer

a. Applicability. The following item in Table 10-8 is certified for the helicopter(s) listed in the following table by the US Army Soldier Systems Center:

Table 10-8. Jam-Resistant Secure Communications (JRSC) Satellite Communications Terminal

NOMENCLATURE	MAX WEIGHT (POUNDS)	SLING SET	LINK COUNT FRONT/ REAR	TYPE OF AIRCRAFT	RECOMMENDED AIRSPEED (KNOTS)
Jam-Resistant Secure Communications (JRSC) Satellite Communications Terminal in Modified S-280 Shelter	20,730	25K	Door is Front 10/30	CH-47	60

b. Materials. The following materials are required to rig this load:

(1) Sling set (25,000-pound capacity) with one additional apex fitting.

(2) Tape, adhesive, pressure-sensitive, 2-inch wide roll.

(3) Cord, nylon, Type III, 550-pound breaking strength.

(4) Webbing, cotton, 1/4-inch, 80-pound breaking strength.

(5) Webbing, tubular, nylon, 1/2-inch, 1,000-pound breaking strength.

c. Personnel. Two persons can prepare and rig this load in 10 minutes.

d. Procedures. The following procedures apply to this load:

(1) Preparation. Prepare the load using the following steps:

(a) Raise and stow mobilizer wheels.

(b) Stow the mobilizer tongue in the up position using safety chain and Type III nylon cord. Secure the hoses and jack handles with tape or Type III nylon cord.

(c) Secure the mobilizer wheel assemblies to the shelter lift eyes. Route an end of 1/2-inch tubular nylon through the cutout in the mobilizer wheel rim and pass it through the shelter lift eye. Tie the ends together with a square knot and an overhand knot in each running end.

(d) Close and secure all doors, vents, and caps.

(2) Rigging. Rig the load according to the steps in Figure 10-8.

(3) Hookup. Two hookup teams stand on the shelter. The static discharge person discharges the static electricity. The forward hookup person stands on the door end of the shelter and places apex fitting 1 onto the forward cargo hook. The aft hookup person places apex fitting 2 onto the aft cargo hook. The hookup teams then carefully dismount the load and remain close to the load as the helicopter removes slack from the sling legs. When successful hookup is assured, the hookup teams quickly exit the area underneath the helicopter to the designated rendezvous point.

NOTE: Brief the helicopter crew to relax the sling leg tension and hover to the side of the load when releasing the apex fitting.

(4) Derigging. Derigging is the reverse of the preparation and rigging procedures in steps d (1) and d (2).

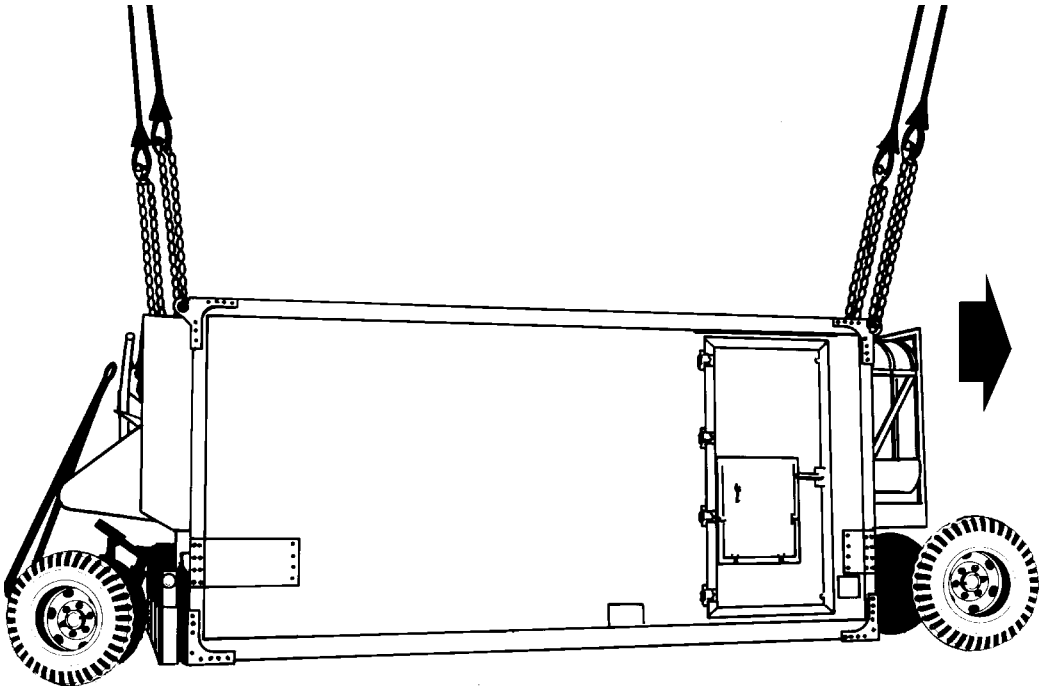

RIGGING STEPS

1. Place two sling legs on apex fitting number 1. Position apex fitting number 1 on top of the shelter (door end).

2. Loop the chain end of the left and right sling legs through their respective lift provisions located on the shelter corners. Place the correct link from Table 10-8 in the grab hook. Secure the excess chain with tape or Type III nylon cord.

3. Place two sling legs on apex fitting number 2. Position apex fitting number 2 on top of the shelter.

4. Loop the chain end of the left and right sling legs through their respective lift provisions located on the shelter corners. Place the correct link from Table 10-8 in the grab hook. Secure the excess chain with tape or Type III nylon cord.

5. Raise the apex fittings above the shelter. Cluster and tie or tape (breakaway technique) the sling legs in each sling set together to prevent entanglement during hookup and lift-off.

Figure 10-8. Jam-Resistant Secure Communications (JRSC) Satellite Communications Terminal

10-10. Downsized Digital Group Multiplexer (DGM) Assemblages

a. Applicability. The following items in Table 10-9 are certified for the helicopter(s) listed in the following table by the US Army Soldier Systems Center:

Table 10-9. Downsized Digital Group Multiplexer (DGM) Assemblages

NOMENCLATURE	MAX WEIGHT (POUNDS)	SLING SET	LINK COUNT FRONT/ REAR	TYPE OF AIRCRAFT	RECOMMENDED AIRSPEED (KNOTS)
AN/TRC-173A	3,500	10K	3/3	CH-47	100
AN/TRC-174A	3,425	10K	3/3	CH-47	100
AN/TRC-175A	3,350	10K	3/3	CH-47	100
AN/TRC-138B	3,525	10K	3/3	CH-47	100
AN/TRC-138C	3,430	10K	3/3	CH-47	100

b. Materials. The following materials are required to rig this load:

(1) Sling set (10,000-pound capacity) with one additional apex fitting.

(2) Tape, adhesive, pressure-sensitive, 2-inch wide roll.

(3) Cord, nylon, Type III, 550-pound breaking strength.

(4) Webbing, cotton, 1/4-inch, 80-pound breaking strength.

c. Personnel. Two persons can prepare and rig this load in 20 minutes.

d. Procedures. The following procedures apply to this load:

(1) Preparation. Prepare the load using the following steps:

(a) Ensure all internal equipment is properly stowed.

(b) Secure all cabinet drawers and doors with tape or Type III nylon cord.

(c) Secure all outer doors with tape.

(d) Secure the ECU cover with tape or Type III nylon cord.

(2) Rigging. Rig the load according to the steps in Figure 10-9.

CAUTION
These loads are certified for the center and aft hooks only. Pilots must ensure that hook jettisoning switches are engaged for center and aft hooks. DO NOT USE THE FORWARD HOOK.

(3) Hookup. Two hookup teams stand on the shelter. The static discharge person discharges the static electricity. The forward hookup person stands on the roadside door end of the shelter and places apex fitting 1 onto the center cargo hook. The aft hookup person places apex fitting 2 onto the aft cargo hook. **DO NOT USE THE FORWARD HOOK.** The hookup teams then carefully dismount the load and remain close to the load as the helicopter removes slack from the sling legs. When successful hookup is assured, the hookup teams quickly exit the area underneath the helicopter to the designated rendezvous point.

(4) Derigging. Derigging is the reverse of the preparation and rigging procedures in steps d (1) and d (2).

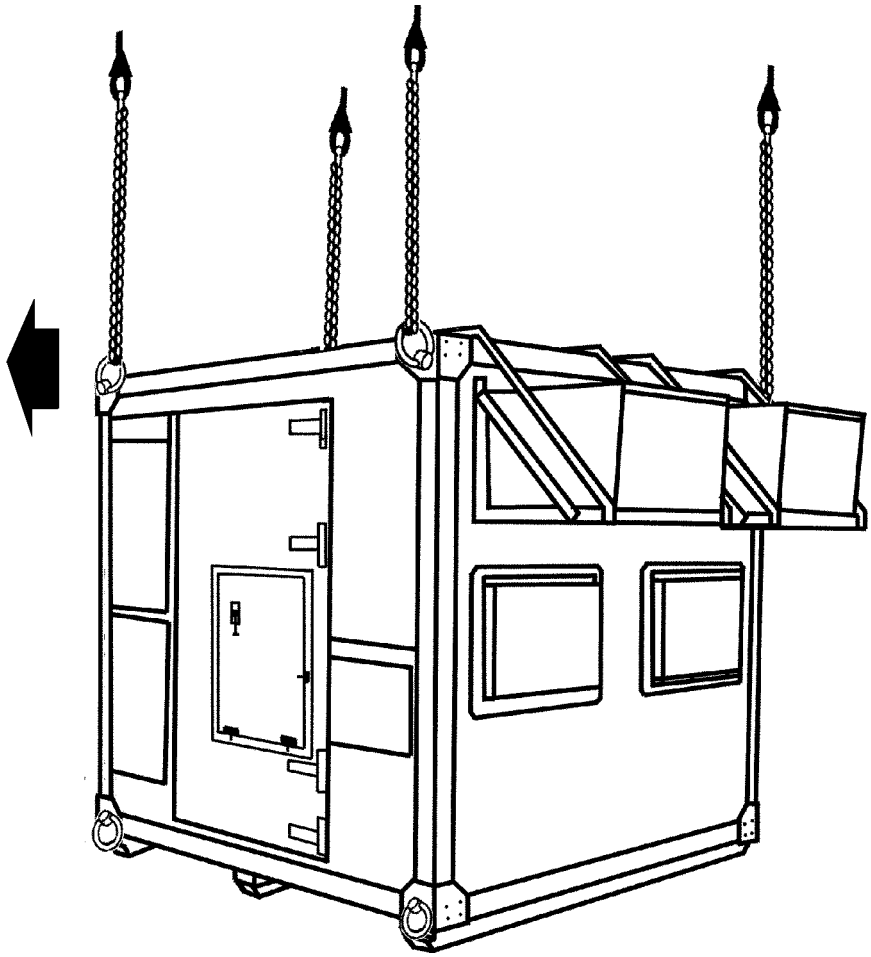

RIGGING STEPS

1. Place two sling legs on apex fitting number 1. Position apex fitting number 1 on top of the shelter.

2. Loop the chain end of the left and right sling legs through their respective lift provisions located on the shelter corners. Place the correct link from Table 10-9 in the grab hook.

3. Place two sling legs on apex fitting number 2. Position apex fitting number 2 on top of the shelter.

4. Loop the chain end of the left and right sling legs through their respective lift provisions located on the shelter corners. Place the correct link from Table 10-9 in the grab hook.

5. Raise the apex fittings above the shelter. Cluster and tie or tape (breakaway technique) the sling legs in each sling set together to prevent entanglement during hookup and lift-off.

Figure 10-9. Downsized Digital Group Multiplexer (DGM) Assemblages

10-11. NATO Airbase Satcom (NABS) Shelter Pallet, AN/TSC-93B(V)2

a. Applicability. The following item in Table 10-10 is certified for the helicopter(s) listed in the following table by the US Army Soldier Systems Center:

Table 10-10. NATO Airbase Satcom (NABS) Shelter Pallet, AN/TSC-93B(V)2

NOMENCLATURE	MAX WEIGHT (POUNDS)	SLING SET	LINK COUNT FRONT/ REAR	TYPE OF AIRCRAFT	RECOMMENDED AIRSPEED (KNOTS)
NATO Airbase Satcom (NABS) Shelter Pallet, AN/TSC-93B(V)2	5,751	10K	3/3	CH-47	130

b. Materials. The following materials are required to rig this load:

(1) Sling set (10,000-pound capacity) with one additional apex fitting.

(2) Tape, adhesive, pressure-sensitive, 2-inch wide roll.

(3) Cord, nylon, Type III, 550-pound breaking strength.

(4) Webbing, cotton, 1/4-inch, 80-pound breaking strength.

c. Personnel. Two persons can prepare and rig this load in 20 minutes.

d. Procedures. The following procedures apply to this load:

(1) Preparation. Prepare the load using the following steps:

(a) Secure all loose equipment on the pallet and in the shelter with tape or Type III nylon cord.

(b) Close and secure all doors, vents, and covers. Tape all exhaust covers.

(c) Remove the cargo cover and secure it inside the shelter.

(2) Rigging. Rig the load according to the steps in Figure 10-10.

CAUTION
Do not use the lift provisions on the shelter.

(3) Hookup. Two hookup teams stand on the shelter. The static discharge person discharges the static electricity. The forward hookup person places apex fitting 1 onto the forward cargo hook. The aft hookup person places apex fitting 2 onto the aft cargo hook. The hookup teams then carefully dismount the load and remain close to the load as the helicopter removes slack from the sling legs. When successful hookup is assured, the hookup teams quickly exit the area underneath the helicopter to the designated rendezvous point.

NOTE: Brief the helicopter crew to relax the sling leg tension and hover to the side of the load when releasing the apex fitting.

(4) Derigging. Derigging is the reverse of the preparation and rigging procedures in steps d (1) and d (2).

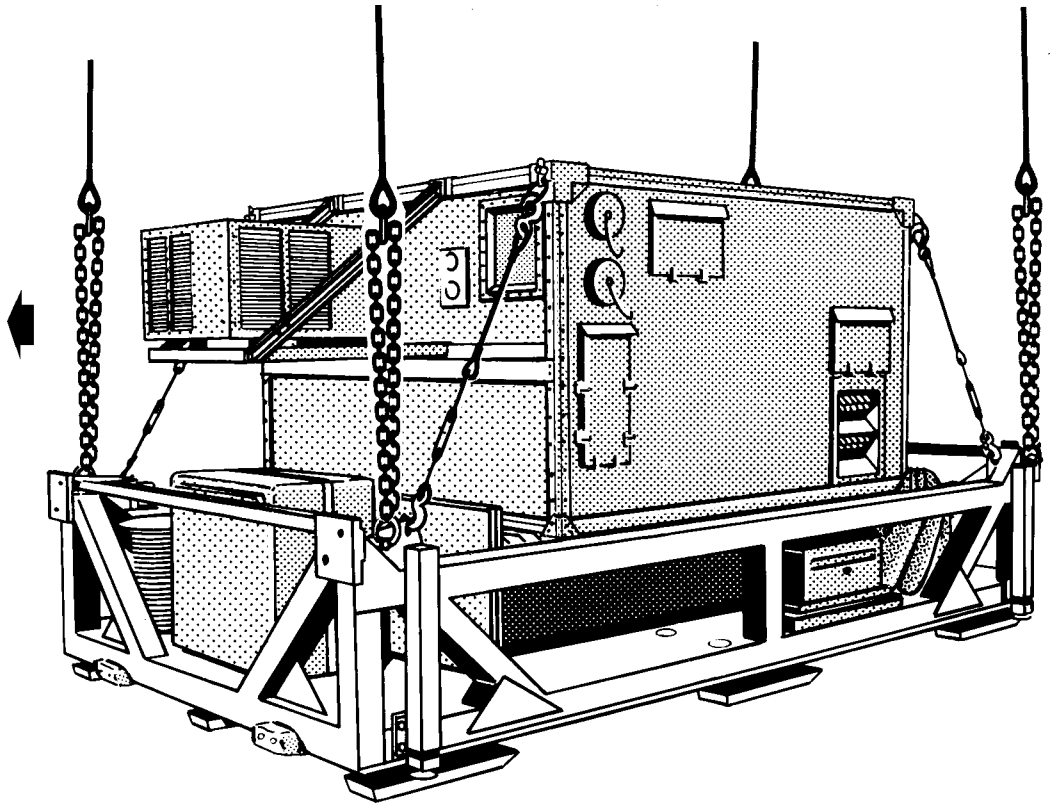

RIGGING STEPS

1. Place two sling legs on apex fitting number 1. Position apex fitting number 1 on top of the shelter.

2. Loop the chain end of the left and right sling legs through their respective lift provisions located on the forward corners of the pallet. Place the correct link from Table 10-10 in the grab hook.

3. Place two sling legs on apex fitting number 2. Position apex fitting number 2 on top of the shelter.

4. Loop the chain end of the left and right sling legs through their respective lift provisions located on the aft corners of the pallet. Place the correct link from Table 10-10 in the grab hook.

5. Raise the apex fittings above the shelter. Cluster and tie or tape (breakaway technique) the sling legs in each sling set together to prevent entanglement during hookup and lift-off.

Figure 10-10. NATO Airbase Satcom (NABS) Shelter Pallet, AN/TSC-93B(V)2

10-12. Trojan Air Transportable Electronic Reconnaissance System (TATERS) High Gain Antenna Group (HGAG) Shelter

a. Applicability. The following item in Table 10-11 is certified for the helicopter(s) listed in the following table by the US Army Soldier Systems Center:

Table 10-11. Trojan Air Transportable Electronic Reconnaissance System (TATERS) High Gain Antenna Group (HGAG) Shelter

NOMENCLATURE	MAX WEIGHT (POUNDS)	SLING SET	LINK COUNT FRONT/ REAR	TYPE OF AIRCRAFT	RECOMMENDED AIRSPEED (KNOTS)
Trojan Air Transportable Electronic Reconnaissance System (TATERS) High Gain Antenna Group (HGAG) Shelter	12,750	25K	3/20	CH-47	60

b. Materials. The following materials are required to rig this load:

(1) Sling set (25,000-pound capacity) with one additional apex fitting.

(a) Chain length, part number 38850-00053-102, from a 25,000-pound capacity sling set (8 each).

(b) Coupling link, part number 664241, from a 25,000-pound capacity sling set (8 each).

(2) Tape, adhesive, pressure-sensitive, 2-inch wide roll.

(3) Cord, nylon, Type III, 550-pound breaking strength.

(4) Webbing, cotton, 1/4-inch, 80-pound breaking strength.

c. Personnel. Two persons can prepare and rig this load in 25 minutes.

d. Procedures. The following procedures apply to this load:

(1) Preparation. Prepare the load using the following steps:

(a) Secure all loose equipment with tape or Type III nylon cord.

(b) Close and secure all doors, vents, and hatches with tape or Type III nylon cord.

(c) Add two additional chain lengths to each sling leg chain using the additional coupling links.

(2) Rigging. Rig the load according to the steps in Figure 10-11.

(3) Hookup. Two hookup teams stand on the HGAG. The static discharge person discharges the static electricity. The forward hookup person places apex fitting 1 onto the forward cargo hook. The aft hookup person places apex fitting 2 onto the aft cargo hook. The hookup teams then carefully dismount the load and remain close to the load as the helicopter removes slack from the sling legs. When successful hookup is assured, the hookup teams quickly exit the area underneath the helicopter to the designated rendezvous point.

(4) Derigging. Derigging is the reverse of the preparation and rigging procedures in steps d (1) and d (2).

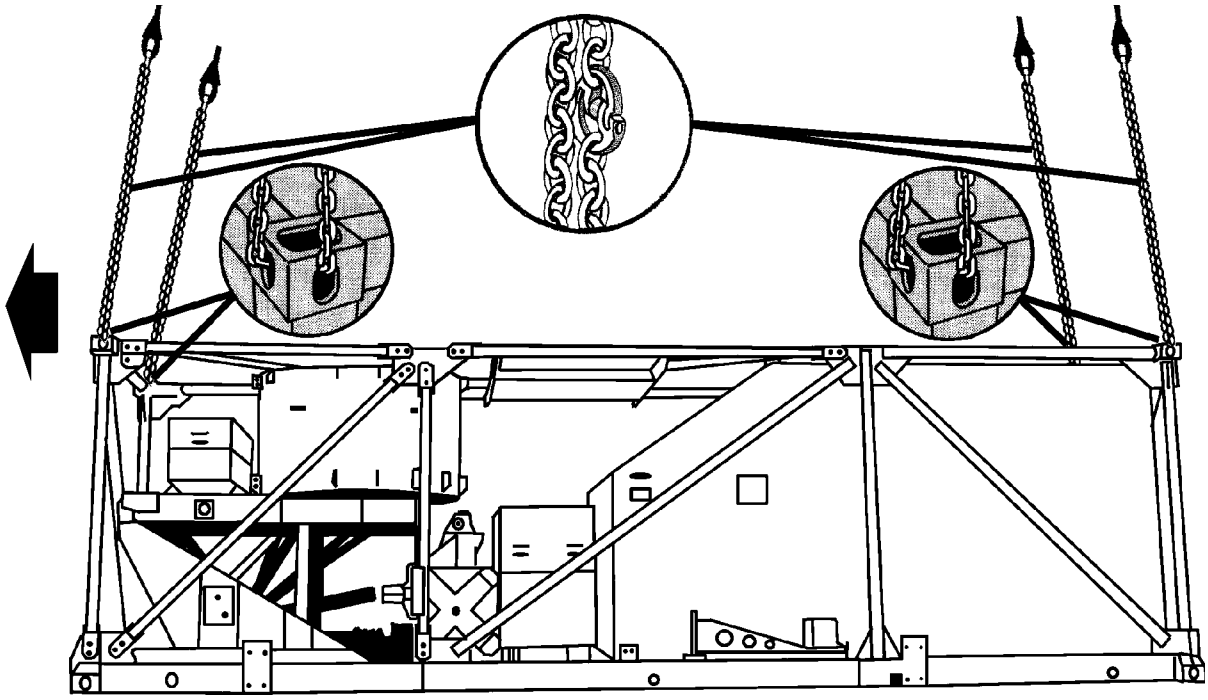

RIGGING STEPS

1. Place two sling legs on apex fitting number 1. Position apex fitting number 1 on top of the shelter.

2. Loop the chain end of the left and right sling legs through their respective lift provisions located on the forward corners. Place the correct link from Table 10-11 in the grab hook.

3. Place two sling legs on apex fitting number 2. Position apex fitting number 2 on top of the aft end of the shelter.

4. Loop the chain end of the left and right sling legs through their respective lift provisions located on the aft corners of the shelter. Place the correct link from Table 10-11 in the grab hook. Secure the excess chain with tape or Type III nylon cord.

5. Raise the apex fittings above the shelter. Cluster and tie or tape (breakaway technique) the sling legs in each sling set together to prevent entanglement during hookup and lift-off.

Figure 10-11. Trojan Air Transportable Electronic Reconnaissance System (TATERS) High Gain Antenna Group (HGAG) Shelter

CHAPTER 11

CERTIFIED DUAL-POINT RIGGING PROCEDURES FOR CONTAINERS

11-1. INTRODUCTION

This chapter contains rigging procedures for dual-point lift of containers that have been certified for sling load. Each rigging procedure is found in a paragraph that includes a description of the load, materials required for rigging, and steps to complete the procedure. An applicability paragraph is also a part of each paragraph and identifies the certified loads. The certified dual-point rigging procedures for containers are in this section. Paragraphs 11-2 through 11-5 give detailed instructions for rigging loads.

NOTE: Reach Pendants may be used on dual point loads. Place a Reach Pendant on each apex fitting. A static discharge person is not required when using a Reach Pendant.

11-2. Full-Up Power Pack (FUPP) Container, M1A1

a. Applicability. The following item in Table 11-1 is certified for the helicopter(s) listed in the following table by the US Army Soldier Systems Center:

Table 11-1. Full-Up Power Pack (FUPP) Container, M1A1

NOMENCLATURE	MAX WEIGHT (POUNDS)	SLING SET	LINK COUNT FRONT/ REAR	TYPE OF AIRCRAFT	RECOMMENDED AIRSPEED (KNOTS)
Full-Up Power Pack (FUPP) Container, M1A1, Metal or Fiberglass	13,620	25K	3/10	CH-47	120

NOTE: This container is only certified with the M1A1 FUPP and is NOT certified empty.

b. Materials. The following materials are required to rig this load:

(1) Sling set (25,000-pound capacity) with one additional apex fitting.

(2) Tape, adhesive, pressure-sensitive, 2-inch wide roll.

(3) Cord, nylon, Type III, 550-pound breaking strength.

(4) Webbing, cotton, 1/4-inch, 80-pound breaking strength.

(5) Strap, cargo, tiedown, CGU-1/B (as required).

c. Personnel. Two persons can prepare and rig this load in 15 minutes.

d. Procedures. The following procedures apply to this load:

(1) Preparation. Prepare the load using the following steps:

(a) Secure all equipment inside the container with tape, Type III nylon cord, or tiedown straps.

(b) Ensure all container doors and vents are closed and secured with tape or Type III nylon cord.

(2) Rigging. Rig the load according to the steps in Figure 11-1.

(3) Hookup. Two hookup teams stand on top of the

container. The static discharge person discharges the static electricity. The forward hookup person (transmission end) places apex fitting 1 onto the forward cargo hook. The aft hookup person places apex fitting 2 onto the aft cargo hook. The hookup teams then carefully dismount the container and remain close to the load as the helicopter removes slack from the sling legs. When successful hookup is assured, the hookup teams quickly exit the area underneath the helicopter to the designated rendezvous point.

(4) Derigging. Derigging is the reverse of the preparation and rigging procedures in steps d (1) and d (2).

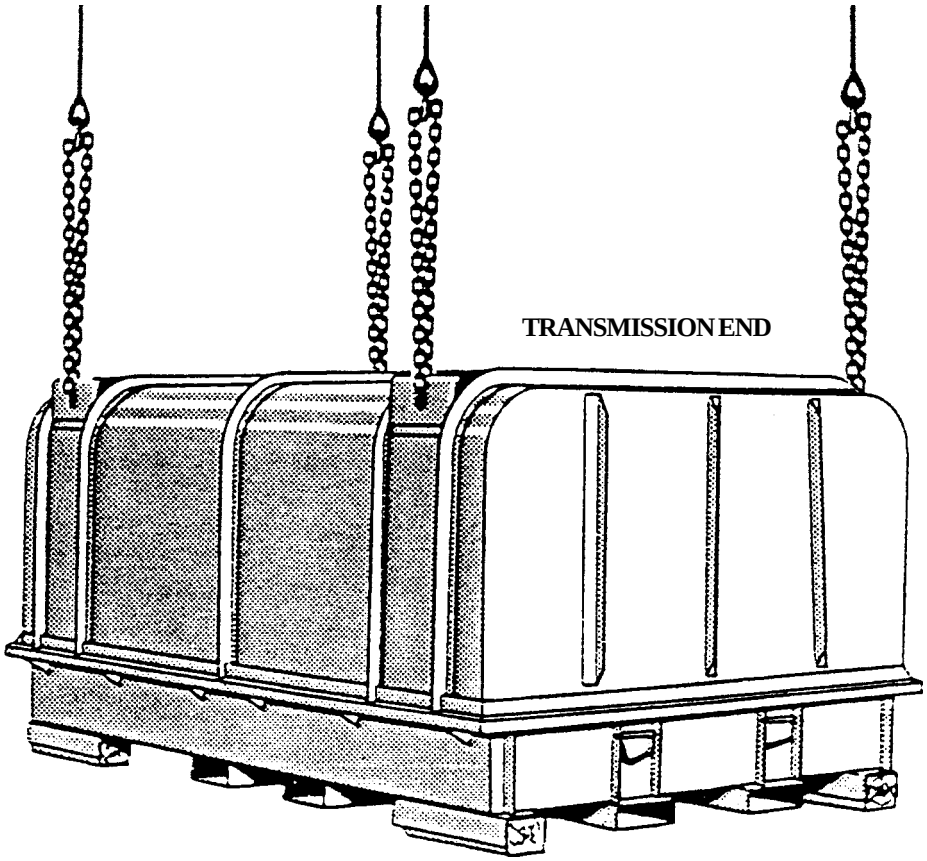

RIGGING STEPS

1. Place two sling legs on apex fitting number 1. Position apex fitting number 1 on top of the container (transmission end).

2. Loop the chain end of the left and right sling legs through their respective lift provisions located on the corners. Place the correct link from Table 11-1 in the grab hook.

3. Place two sling legs on apex fitting number 2. Position apex fitting number 2 on top of the container.

4. Loop the chain end of the left and right sling legs through their respective lift provisions located on the corners. Place the correct link from Table 11-1 in the grab hook. Secure the excess chain with tape or Type III nylon cord.

5. Raise the apex fittings above the shelter. Cluster and tie or tape (breakaway technique) the sling legs in each sling set together to prevent entanglement during hookup and lift-off.

Figure 11-1. Full-Up Power Pack (FUPP) Container, M1A1

11-3. Tandem Lift of Two ISU-90 Shipping/Storage Containers

a. Applicability. The following item in Table 11-2 is certified for the helicopter(s) listed in the following table by the US Army Soldier Systems Center:

Table 11-2. Two ISU-90 Shipping/Storage Containers

NOMENCLATURE	MAX WEIGHT (POUNDS)	SLING SET	LINK COUNT OUTSIDE/ INSIDE	TYPE OF AIRCRAFT	RECOMMENDED AIRSPEED (KNOTS)
Two (2) ISU-90 Shipping / Storage Containers, Tandem	7,500 Each 15,000 Total	25K	20/10	CH-47	90

WARNING
AS THE WEIGHT OF THE CONTAINERS DROP, THE AIRSPEED MUST ALSO DROP.

b. Materials. The following materials are required to rig this load:

(1) Sling set (25,000-pound capacity)(2 each).

(2) Tape, adhesive, pressure-sensitive, 2-inch wide roll.

(3) Cord, nylon, Type III, 550-pound breaking strength.

(4) Webbing, cotton, 1/4-inch, 80-pound breaking strength.

(5) Lumber, 4-inch x 6-inch x 72-inch (2 each).

(6) Lumber, 1-inch x 3-inch x 24-inch (2 each).

(7) Bolts, 1/2-inch x 6-inch (2 each).

(8) Nuts, 1/2-inch (2 each).

(9) Rope, 5/8-inch x 84-inch (2 each).

(10) Strap, cargo, tie-down, CGU-1/B (as required).

c. Personnel. Two persons can prepare and rig this load in 20 minutes.

d. Procedures. The following procedures apply to this load:

(1) Preparation. Prepare the load using the following steps:

(a) Secure all cargo inside the container.

(b) Secure all doors in the closed/locked position.

(c) Construct the top wooden separator by bolting the two 1-inch x 3-inch x 24-inch pieces of lumber to a 4-inch x 6-inch x 72-inch piece of lumber. Space the 1-inch x 3-inch x 24-inch pieces of lumber so they will fit in the 45 degree slots on the top of the ISU-90. Drill two additional 3/4-inch holes through the 4-inch x 6-inch x 72-inch piece of lumber 18-inches in from each end. Route one end of a piece of 5/8-inch rope up through through the 3/4-inch hole from bottom to top. Tie an overhand knot in the top running end. Route the running end of the second 5/8-inch rope up through the second 3/4-inch hole from bottom to top and tie an overhand knot in the top running end.

(d) Construct the bottom wooden separator by drilling two 3/4-inch holes in the second 4-inch x 6-inch x 72-inch piece of lumber 18-inches in from each end. Route the other running end of the ropes through the holes in the bottom separator from top to bottom and tie an overhand knot in each bottom running end.

(e) Raise the top wooden separator up to the top of the ISU-90 and slide the unbolted end of the two 1-inch x 3-inch x 24-inch pieces of lumber into the 45 degree slots on the top of the ISU-90.

(f) Move the second container as close as possible to the first container, end to end. Designate the heaviest container as the forward container.

(g) Pass a CGU-1/B through each inboard forklift point of each ISU-90. Connect the two CGU-1/Bs together and tighten.

(h) Encircle the top of the two ISU-90s by connecting the CGU-1Bs together. Tighten the CGU-1Bs.

CAUTION

THE CONTAINERS SHOULD BE AS CLOSE AS POSSIBLE IN WEIGHT. IF THE WEIGHT VARIES BY 500 POUNDS OR MORE, PLACE THE HEAVIER CONTAINER IN THE FORWARD POSITION. ENSURE THE WEIGHT INSIDE THE CONTAINERS IS EVENLY DISTRIBUTED.

(2) Rigging. Rig the load according to the steps in Figure 11-2.

(3) Hookup. Two hookup teams are used for this load. The static wand person discharges the static electricity with the static wand. The forward hookup person stands on top of the forward load and places apex fitting 1 onto the forward cargo hook. The aft hookup person stands on top of the rear load and places apex fitting 2 onto the aft cargo hook. The hookup team then carefully dismounts the load and remains close to the load as the helicopter removes slack from the sling legs. When successful hookup is assured, the hookup team quickly exits the area underneath the helicopter to the designated rendezvous point.

(4) Derigging. Derigging is the reverse of the preparation and rigging procedures in steps d (1) and d (2).

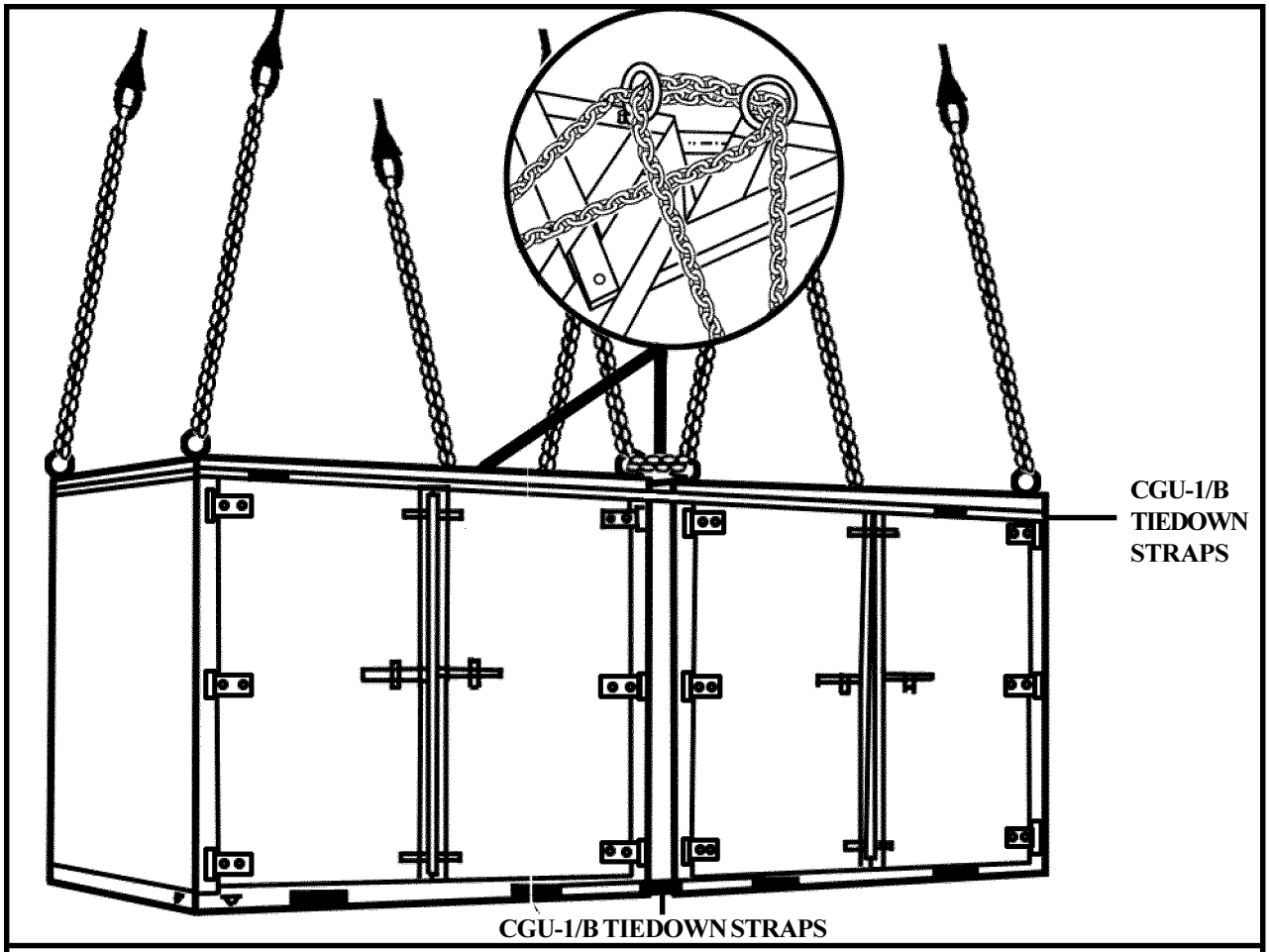

RIGGING STEPS

1. Position sling set one on top of the forward container.

2. Route outer sling legs 1 and 2 to the forward end of the forward container and inner legs 3 and 4 to the rear. Loop the chain end of sling legs 1 and 2 through their respective lift provisions located on the forward end of the container. Place the correct link from Table 11-2 in the grab hook. Loop the chain end of sling legs 3 and 4 through the lift provisions on the rear of the forward container and the front of the rear container. Place the correct link from Table 11-2 in the grab hook.

3. Position sling set two on top of the rear container.

4. Route outer sling legs 1 and 2 to the forward end of the rear container and inner legs 3 and 4 to the rear. Loop the chain end of sling legs 1 and 2 through the lift provisions on the front of the rear container and the rear of the front container. Place the correct link from Table 11-2 in the grab hook. Loop the chain end of sling legs 3 and 4 through their respective lift provisions located on the rear end of the rear container. Place the correct link from Table 11-2 in the grab hook.

5. Secure all excess chain with tape or Type III nylon cord.

6. Cluster and tie or tape (breakaway technique) the sling legs in each sling set on top of the containers to prevent entanglement during hookup and lift-off.

Figure 11-2. Two ISU-90 Shipping/Storage Containers

11-4. Army Tactical Missile Systems Multiple Launch Rocket System or Guided Missile Launch Assembly, Two Containers

a. Applicability. The following items in Table 11-3 are certified for the helicopter(s) listed in the following table by the US Army Soldier Systems Center:

Table 11-3. Army Tactical Missile Systems Multiple Launch Rocket System or Guided Missile Launch Assembly, Two Containers

NOMENCLATURE	MAX WEIGHT (POUNDS)	SLING SET	LINK COUNT FRONT/ REAR	TYPE OF AIRCRAFT	RECOMMENDED AIRSPEED (KNOTS)
Multiple Launch Rocket System with Two Rocket Pods/Containers, (with Six Rockets)	10,010	25K	3/3	CH-47	110
Two Enclosure Assembly Launch Pods, Guided Missile Launch Assembly	10,222	25K	3/3	CH-47	110

b. Materials. The following materials are required to rig this load:

(1) Sling set (25,000-pound capacity) with one additional apex fitting.

(2) Tape, adhesive, pressure-sensitive, 2-inch wide roll.

(3) Cord, nylon, Type III, 550-pound breaking strength.

(4) Webbing, cotton, 1/4-inch, 80-pound breaking strength.

(5) Strap, cargo, tiedown, CGU-1/B (as required).

(6) Felt sheet, cattle hair, Type IV, 1/2-inch or suitable padding.

c. Personnel. Two persons can prepare and rig this load in 30 minutes.

d. Procedures. The following procedures apply to this load:

(1) Preparation. Prepare the load using the following steps:

(a) Prepare GMLAs/RPCs for travel in accordance with standard procedures.

CAUTION
Do not mix the MLRS and the GMLA in the same load.

(b) Stack the GMLAs/RPCs one on top of the other ensuring both GMLAs/RPCs are facing the same direction.

(c) Lash the stacks of GMLAs/RPCs together using the CGU-1/B tiedown straps. Two of the straps should run through both sets of lifting provisions on each end of the GMLAs/RPCs, to keep them aligned during flight. Evenly space the remaining two straps between the lifting provisions, running them around the GMLAs/RPCs. **DO NOT ROUTE THE STRAPS OVER THE ROCKET TUBES.** Pad all straps in the area where they contact the edges of the GMLAs/RPCs.

(2) Rigging. Rig the load according to the steps in Figure 11-3.

NOTE: The firing end is considered to be the front of the load.

(3) Hookup. Two hookup teams stand on top of the

container. The static discharge person discharges the static electricity. The forward hookup person places apex fitting 1 onto the forward cargo hook. The aft hookup person places apex fitting 2 onto the aft cargo hook. The hookup teams then carefully dismount the container and remain close to the load as the helicopter removes slack from the sling legs. When successful hookup is assured, the hookup teams quickly exit the area underneath the helicopter to the designated rendezvous point.

(4) Derigging. Derigging is the reverse of the preparation and rigging procedures in steps d (1) and d (2).

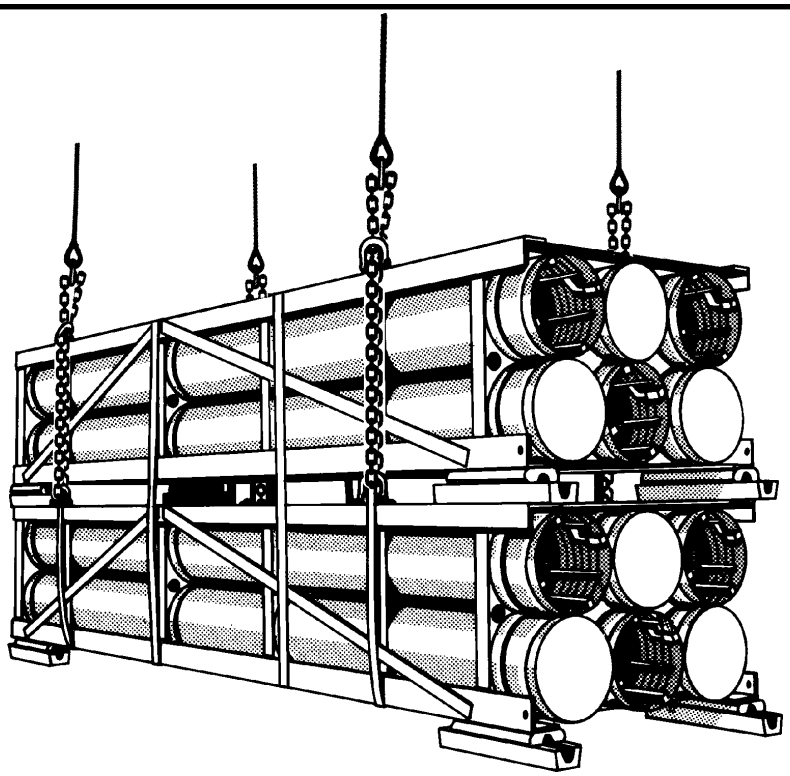

RIGGING STEPS

1. Place two sling legs on apex fitting number 1. Position apex fitting number 1 on top of the forward end of the GMLAs/RPCs.

2. Loop the chain end of the left and right sling legs through their respective top front lift provisions of the GMLAs/RPCs, through the front lifting provision on the bottom GMLAs/RPCs, and back through the front top lift provision on the top RP/C. Place the correct link from Table 11-3 in the grab hook.

3. Place two sling legs on apex fitting number 2. Position apex fitting number 1 on top of the aft end of the GMLAs/RPCs.

4. Loop the chain end of the left and right sling legs through their respective top rear lift provisions of the GMLAs/RPCs, through the rear lifting provision on the bottom GMLAs/RPCs, and back through the rear top lift provision on the top GMLAs/RPCs. Place the correct link from Table 11-3 in the grab hook.

5. Raise the apex fittings above the shelter. Cluster and tie or tape (breakaway technique) the sling legs in each sling set together to prevent entanglement during hookup and lift-off.

Figure 11-3. Army Tactical Missile Systems Multiple Launch Rocket System or Guided Missile Launch Assembly, Two Containers

11-5. Army Tactical Missile Systems Multiple Launch Rocket System or Guided Missile Launch Assembly, Four Containers

a. Applicability. The following items in Table 11-4 are certified for the helicopter(s) listed in the following table by the US Army Soldier Systems Center:

Table 11-4. Army Tactical Missile Systems Multiple Launch Rocket System or Guided Missile Launch Assembly, Four Containers

NOMENCLATURE	MAX WEIGHT (POUNDS)	SLING SET	LINK COUNT OUTER/ INNER	TYPE OF AIRCRAFT	RECOMMENDED AIRSPEED (KNOTS)
Multiple Launch Rocket System (MLRS) Four Enclosure Assembly Launch Pods	20,020	25K	3/14	CH-47	120
Guided Missile Launch Assembly (GMLA), Four Enclosure Assembly Launch Pods	20,444	25K	3/14	CH-47	120

b. Materials. The following materials are required to rig this load:

(1) Sling set (25,000-pound capacity) (2 each).

(2) Tape, adhesive, pressure-sensitive, 2-inch wide roll.

(3) Cord, nylon, Type III, 550-pound breaking strength.

(4) Webbing, cotton, 1/4-inch, 80-pound breaking strength.

(5) Strap, cargo, tiedown, CGU-1/B (16 each).

(6) Lumber, 2 X 4 X 65-inches (4 each).

(7) Nails, eightpenny (as required).

(8) Felt sheet, cattle hair, Type IV, 1/2-inch or suitable padding.

(9) Crane or forklift (15,000-pound capacity or larger).

c. Personnel. Four persons can prepare and rig this load in 30 minutes.

d. Procedures. The following procedures apply to this load:

(1) Preparation. Prepare the load using the following steps:

(a) Prepare the GMLAs/RPCs for sling loading in accordance with standard procedures.

(b) Prepare two pieces of dunnage to protect the GMLAs/RPCs by nailing two pieces of 2 X 4 X 65-inch lumber together, wide side to wide side.

(c) Make two stacks of GMLAs/RPCs. Use the crane or forklift to stack one stack of GMLAs/RPCs on top of the other with the projectiles facing the same direction. Label the stacks #1 and #2.

CAUTION
Do not mix the MLRS and the GMLA in the same load.

(d) Lash stack #1 together using four tiedown straps. Route a tiedown strap through both sets of lifting provisions on each end of the GMLAs/RPCs. Evenly space the remaining two tiedown straps between the lifting pro-

visions, routing the straps around the GMLAs/RPCs. **DO NOT ROUTE THE STRAPS OVER THE ROCKET TUBES.** Pad the straps where they contact the edges of the EALP.

(e) Lash stack #2 using the above procedures for stack #1.

(f) Position the two pieces of dunnage near the lifting provisions on each end of the GMLAs/RPCs. Secure the dunnage to the GMLAs/RPCs with Type III nylon cord.

(g) Position stack #1 against stack #2 using the crane or forklift. Ensure the dunnage is between the loads.

(h) Lash the top two GMLAs/RPCs together on each end. Connect two tiedown straps together to form each lashing.

(i) Lash the bottom two GMLAs/RPCs together on each end. Connect two tiedown straps together to form each lashing.

(j) Pad the straps where they contact the edges of the GMLAs/RPCs

(2) Rigging. Rig the load according to the steps in Figure 11-4.

NOTE: The firing end is considered the front of the load.

(3) Hookup. Two hookup teams stand on top of the container. The static discharge person discharges the static electricity. The forward hookup person places apex fitting 1 onto the forward cargo hook. The aft hookup person places apex fitting 2 onto the aft cargo hook. The hookup teams then carefully dismount the container and remain close to the load as the helicopter removes slack from the sling legs. When successful hookup is assured, the hookup teams quickly exit the area underneath the helicopter to the designated rendezvous point.

(4) Derigging. Derigging is the reverse of the preparation and rigging procedures in steps d (1) and d (2).

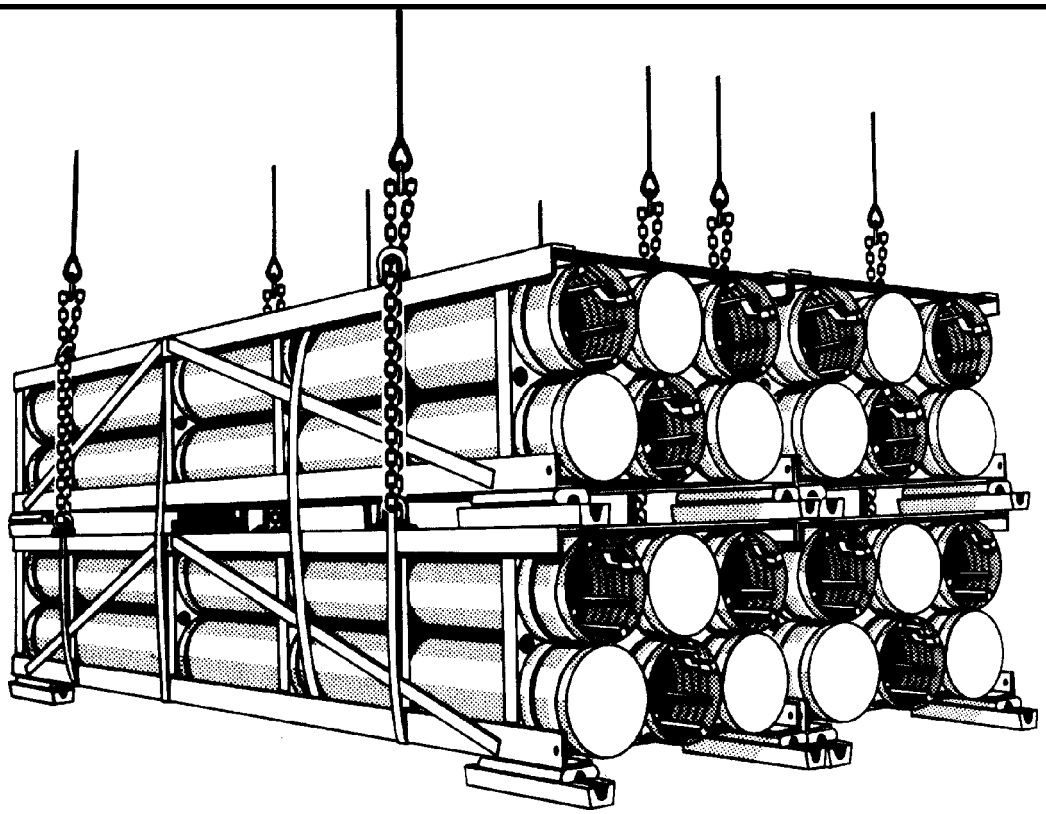

RIGGING STEPS

1. Position sling set number 1 on top of the forward end of the GMLAs/RPCs.

2. Loop the chain end of outer sling legs 1 and 2 through their respective top front lift provisions of the top GMLAs/RPCs, through the front lifting provision on the bottom GMLAs/RPCs, and back through the front top lift provision on the top GMLAs/RPCs. Place the correct link from Table 11-4 in the grab hook.

3. Loop the chain end of inner sling legs 3 and 4 through their respective top front lift provisions of the top , through the front lifting provision on the bottom GMLAs/RPCs, and back through the front top lift provision on the top GMLAs/RPCs. Place the correct link from Table 11-4 in the grab hook. Secure the excess chain with tape or Type III nylon cord.

4. Position sling set number 2 on top of the aft end of the GMLAs/RPCs.

5. Loop the chain end of outer sling legs 1 and 2 through their respective top rear lift provisions of the top GMLAs/RPCs, through the rear lifting provision on the bottom GMLAs/RPCs, and back through the rear top lift provision on the top GMLAs/RPCs. Place the correct link from Table 11-4 in the grab hook.

6. Loop the chain end of inner sling legs 3 and 4 through their respective top rear lift provisions of the top GMLAs/RPCs, through the rear lifting provision on the bottom GMLAs/RPCs, and back through the rear top lift provision on the top GMLAs/RPCs. Place the correct link from Table 11-4 in the grab hook. Secure the excess chain with tape or Type III nylon cord.

7. Raise the apex fittings above the container. Cluster and tie or tape (breakaway technique) the sling legs in each sling set together to prevent entanglement during hookup and lift-off.

Figure 11-4. Army Tactical Missile Systems Multiple Launch Rocket System or Guided Missile Launch Assembly, Four Containers

CHAPTER 12

CERTIFIED DUAL-POINT RIGGING PROCEDURES FOR RADAR AND SATELLITE EQUIPMENT

12-1. INTRODUCTION

This chapter contains rigging procedures for dual-point lift of radar and satellite equipment that has been certified for sling load. Each rigging procedure is found in a paragraph that includes a description of the load, materials required for rigging, and steps to complete the procedure. An applicability paragraph is also a part of each paragraph and identifies the certified loads. The certified dual-point rigging procedures for radar and satellite equipment are in this section. Paragraphs 12-2 through 12-5 give detailed instructions for rigging loads.

NOTE: Reach Pendants may be used on dual point loads. Place a Reach Pendant on each apex fitting. A static discharge person is not required when using a Reach Pendant.

12-2. OE 361/G Quick Reaction Satellite Antenna

a. Applicability. The following item in Table 12-1 is certified for the helicopter(s) listed in the following table by the US Army Soldier Systems Center:

Table 12-1. OE 361/G Quick Reaction Satellite Antenna

NOMENCLATURE	MAX WEIGHT (POUNDS)	SLING SET	LINK COUNT FRONT/ REAR	TYPE OF AIRCRAFT	RECOMMENDED AIRSPEED (KNOTS)
Antenna, Satellite, Quick Reaction (QRSA), OE-361/G	4,830	10K	3/30	CH-47	110

b. Materials. The following materials are required to rig this load:

(1) Sling set (10,000-pound capacity) with one additional apex fitting.

(2) Tape, adhesive, pressure-sensitive, 2-inch wide roll.

(3) Cord, nylon, Type III, 550-pound breaking strength.

(4) Webbing, cotton, 1/4-inch, 80-pound breaking strength.

(5) Felt sheet, cattle hair, Type IV, 1/2-inch or suitable padding.

c. Personnel. Four persons can prepare and rig this load in 30 minutes.

d. Procedures. The following procedures apply to this load:

(1) Preparation. Prepare the load using the following steps:

(a) Install the spreader bar assembly that is stored on the load. Hook the spreader bar assembly cables to the lift rings and secure the keepers with tape.

(b) Pad the spreader bar. Secure the padding with tape or cotton webbing.

(c) Pad the uppermost stacked antenna panel. Secure the padding with tape or cotton webbing.

(d) Secure the ladder, box covers, and any loose equipment with tape or Type III nylon cord.

(2) Rigging. Rig the load according to the steps in Figure 12-1.

NOTE: The ladder end is the front of the load.

(3) Hookup. Two hookup teams stand on top of the load between the stacked antenna panels and on either side of the center post. The static discharge person discharges the static electricity. The forward hookup person (ladder end) places apex fitting 1 onto the forward cargo hook. The aft hookup person places apex fitting 2 onto the aft cargo hook. The hookup teams then carefully dismount the container and remain close to the load as the helicopter removes slack from the sling legs. When successful hookup is assured, the hookup teams quickly exit the area underneath the helicopter to the designated rendezvous point.

CAUTION
Brief the helicopter crew to relax sling leg tension and to hover to the side of the load when releasing the apex fitting to prevent damaging the antenna.

(4) Derigging. Derigging is the reverse of the preparation and rigging procedures in steps d (1) and d (2).

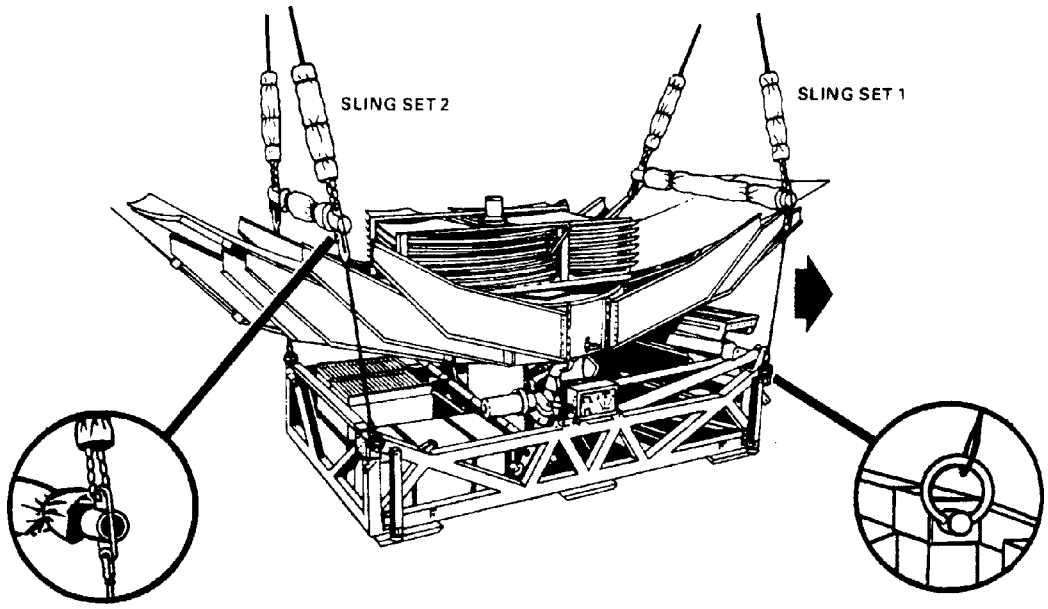

RIGGING STEPS

1. Place two sling legs on apex fitting number 1. Position apex fitting number 1 on top of the load (ladder end).

2. Loop the chain end of the left and right sling legs through their respective lift eyes located on the ends of the spreader bar. Place the correct link from Table 12-1 in the grab hook.

3. Place two sling legs on apex fitting number 2. Position apex fitting number 2 on top of the aft end of the load.

4. Loop the chain end of the left and right sling legs through their respective lift eyes located on the ends of the spreader bar. Place the correct link from Table 12-1 in the grab hook. Secure the excess chain with tape or Type III nylon cord.

5. Pad each grab hook. Secure the padding with tape or cotton webbing.

6. Raise the apex fittings above the load. Cluster and tie or tape (breakaway technique) the sling legs in each sling set together to prevent entanglement during hookup and lift-off.

Figure 12-1. OE 361/G Quick Reaction Satellite Antenna

12-3. NATO Air Base SATCOM (NABS) Power Pallet, AN/TSC-85B(V)2

a. Applicability. The following item in Table 12-2 is certified for the helicopter(s) listed in the following table by the US Army Soldier Systems Center:

Table 12-2. NATO Air Base SATCOM (NABS) Power Pallet, AN/TSC-85B(V)2

NOMENCLATURE	MAX WEIGHT (POUNDS)	SLING SET	LINK COUNT FRONT/ REAR	TYPE OF AIRCRAFT	RECOMMENDED AIRSPEED (KNOTS)
NATO Air Base SATCOM (NABS) Power Pallet, AN/TSC-85B(V)2	8,630	10K	3/3	CH-47	120

b. Materials. The following materials are required to rig this load:

(1) Sling set (10,000-pound capacity) with one additional apex fitting.

(2) Tape, adhesive, pressure-sensitive, 2-inch wide roll.

(3) Cord, nylon, Type III, 550-pound breaking strength.

(4) Webbing, cotton, 1/4-inch, 80-pound breaking strength.

c. Personnel. Two persons can prepare and rig this load in 20 minutes.

d. Procedures. The following procedures apply to this load:

(1) Preparation. Prepare the load using the following steps:

(a) Secure all cargo inside the shelter or on the pallet with tape or Type III nylon cord.

(b) Close and secure all access cover latches, vents, and doors. Tape all exhaust covers.

(c) Remove the cargo cover and stow it in the prime mover. **DO NOT STOW THE COVER ON THE PALLET.**

(2) Rigging. Rig the load according to the steps in Figure 12-2.

NOTE: The Required Individual Equipment (RIE) case end of the pallet is designated as the forward end of the load.

(3) Hookup. Two hookup teams are used for this load. The static wand person discharges the static electricity with the static wand. The forward hookup person stands on top of the generators and places apex fitting 1 onto the forward cargo hook. The aft hookup person stands on top of the generators and places apex fitting 2 onto the aft cargo hook. The hookup team then carefully dismounts the load and remains close to the load as the helicopter removes slack from the sling legs. When successful hookup is assured, the hookup team quickly exits the area underneath the helicopter to the designated rendezvous point.

CAUTION
Brief the helicopter crew to relax sling leg tension and to hover to the side of the load when releasing the apex fitting to prevent damaging the antenna.

(4) Derigging. Derigging is the reverse of the preparation and rigging procedures in steps d (1) and d (2).

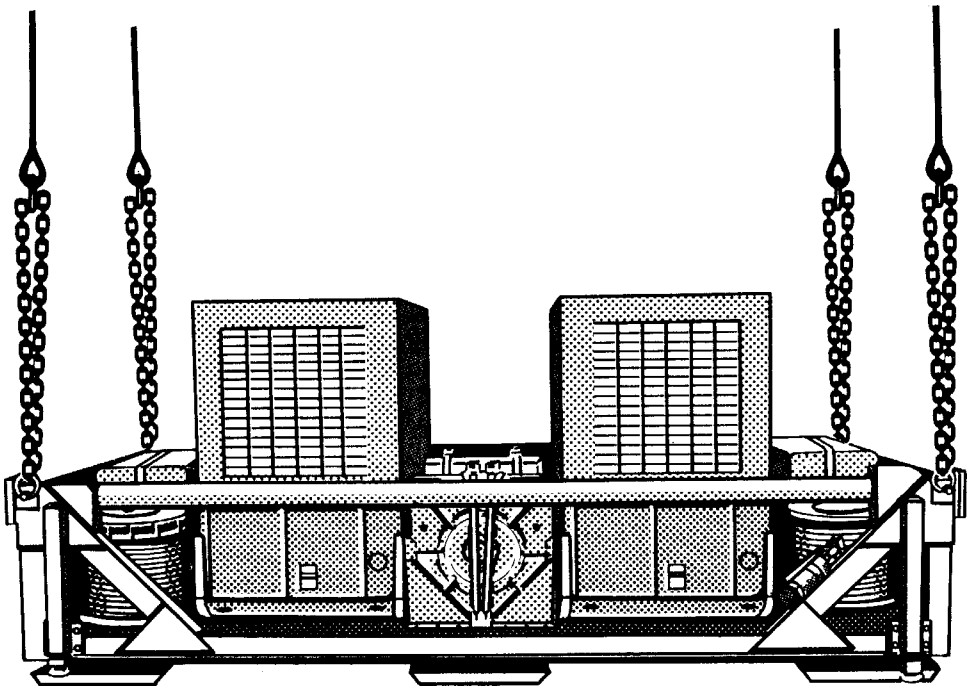

RIGGING STEPS

1. Place two sling legs on apex fitting number 1. Position apex fitting number 1 on top of the generator on the forward end.

2. Loop the chain end of the left and right sling legs through their respective lift provisions located on the corners of the pallet. Place the correct link from Table 12-2 in the grab hook.

3. Place two sling legs on apex fitting number 2. Position apex fitting number 2 on top of the generator on the aft end of the pallet.

4. Loop the chain end of the left and right sling legs through their respective lift provisions located on the corners of the pallet. Place the correct link from Table 12-2 in the grab hook.

NOTE: DO NOT use the lift provisions on the generators.

5. Raise the apex fittings above the load. Cluster and tie or tape (breakaway technique) the sling legs in each sling set together to prevent entanglement during hookup and lift-off.

Figure 12-2. NATO Air Base SATCOM (NABS) Power Pallet, AN/TSC-85B(V)2

12-4. Digital Group Multiplexer (DGM) Digital Antenna Mast Program (DAMP) Pallet Trailer

a. Applicability. The following items in Table 12-3 are certified for the helicopter(s) listed in the following table by the US Army Soldier Systems Center:

Table 12-3. Digital Group Multiplexer, Digital Antenna Mast Program, Pallet Trailer

NOMENCLATURE	MAX WEIGHT (POUNDS)	SLING SET	LINK COUNT FRONT/ REAR	TYPE OF AIRCRAFT	RECOMMENDED AIRSPEED (KNOTS)
Digital Group Multiplexer, Digital Antenna Mast Program, Pallet Trailer, 2 Antenna Configuration	13,400	25K	13/3	CH-47	100
Digital Group Multiplexer, Digital Antenna Mast Program, Pallet Trailer, 3 Antenna Configuration	14,600	25K	13/3	CH-47	110

b. Materials. The following materials are required to rig this load:

(1) Sling set (25,000-pound capacity) with one additional apex fitting.

(a) Chain length, part number 38850-00053-102, from a 25,000-pound capacity sling set (4 each).

(b) Coupling link, part number 664241, from a 25,000-pound sling set (4 each).

(2) Tape, adhesive, pressure-sensitive, 2-inch wide roll.

(3) Cord, nylon, Type III, 550-pound breaking strength.

(4) Webbing, cotton, 1/4-inch, 80-pound breaking strength.

(5) Webbing, tubular, nylon, 1/2-inch, 1,000-pound breaking strength.

(6) Felt sheet, cattle hair, Type IV, 1/2-inch or suitable padding.

c. Personnel. Two persons can prepare and rig this load in 30 minutes.

d. Procedures. The following procedures apply to this load:

(1) Preparation. Prepare the load using the following steps:

(a) Engage the trailer parking brakes.

(b) Tape the rubber flaps on the generator to the frame.

(c) Adjust the leveling jacks on the front of the trailer so the trailer is level.

(d) Attach an additional chain length to each sling leg chain with a coupling link.

(2) Rigging. Rig the load according to the steps in Figure 12-3.

(3) Hookup. Two hookup teams stand on top of the trailer. The static discharge person discharges the static electricity. The forward hookup person places apex fitting 1 onto the forward cargo hook. The aft hookup person places apex fitting 2 onto the aft cargo hook. The hookup teams then carefully dismount the trailer and remain close to the load as the helicopter removes slack from the sling legs. When successful hookup is assured,

the hookup teams quickly exit the area underneath the helicopter to the designated rendezvous point.

(4) Derigging. Derigging is the reverse of the preparation and rigging procedures in steps d (1) and d (2).

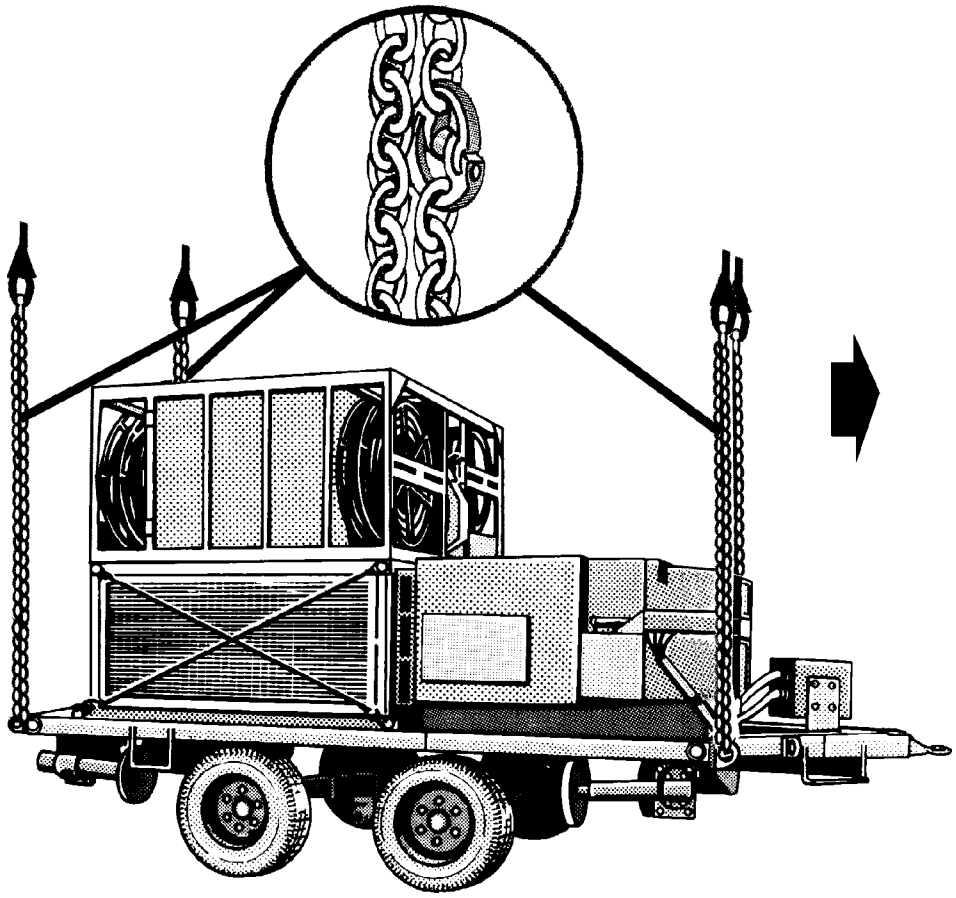

RIGGING STEPS

1. Place two sling legs on apex fitting number 1. Position apex fitting number 1 on top of the trailer.

2. Loop the chain end of the left and right sling legs through their respective front lift provisions located on the front corner of the trailer. Place the correct link from Table 12-3 in the grab hook. Secure the excess chain with tape or Type III nylon cord.

3. Place two sling legs on apex fitting number 2. Position apex fitting number 1 on top of the trailer.

4. Loop the chain end of the left and right sling legs through their respective rear lift provisions located on the rear corners of the trailer. Place the correct link from Table 12-3 in the grab hook.

5. Pad the chains and secure the padding with tape.

6. Raise the apex fittings above the trailer. Cluster and tie or tape (breakaway technique) the sling legs in each sling set together to prevent entanglement during hookup and lift-off.

Figure 12-3. Digital Group Multiplexer, Digital Antenna Mast Program, Pallet Trailer

12-5. Lightweight Generator Frame Assembly (AN/TSC-93B Reconfiguration), Satellite Communications Terminal

a. Applicability. The following item in Table 12-4 is certified for the helicopter(s) listed in the following table by the US Army Soldier Systems Center:

Table 12-4. Lightweight Generator Frame Assembly

NOMENCLATURE	MAX WEIGHT (POUNDS)	SLING SET	LINK COUNT FRONT/ REAR	TYPE OF AIRCRAFT	RECOMMENDED AIRSPEED (KNOTS)
AN/TSC-93B Satellite Communications Terminal without ALTA	3,644	10K	3/3	CH-47	120
AN/TSC-93B Satellite Communications Terminal with ALTA	3,957	10K	3/3	CH-47	120

b. Materials. The following materials are required to rig this load:

(1) Sling set (10,000-pound capacity) with one additional apex fitting.

(2) Tape, adhesive, pressure-sensitive, 2-inch wide roll.

(3) Cord, nylon, Type III, 550-pound breaking strength.

(4) Webbing, cotton, 1/4-inch, 80-pound breaking strength.

(5) Strap,cargo, tiedown, CGU-1/B (as required).

c. Personnel. Three persons can prepare and rig this load in 10 minutes.

d. Procedures. The following procedures apply to this load:

(1) Preparation. Prepare the load using the following steps:

(a) Secure all equipment with tiedown straps, Type III nylon cord, or tape.

(b) Remove and stow the protective cover. Secure the cover with Type III nylon cord.

(2) Rigging. Rig the load according to the steps in Figure 12-4.

(3) Hookup. Two hookup teams stand on top of the frame. The static discharge person discharges the static electricity. The forward hookup person places apex fitting 1 onto the forward cargo hook. The aft hookup person places apex fitting 2 onto the aft cargo hook. The hookup teams then carefully dismount the load and remain close to the load as the helicopter removes slack from the sling legs. When successful hookup is assured, the hookup teams quickly exit the area underneath the helicopter to the designated rendezvous point.

CAUTION
Brief the helicopter crew to relax sling leg tension and to hover to the side of the load when releasing the apex fitting to prevent damaging the antenna.

(4) Derigging. Derigging is the reverse of the preparation and rigging procedures in steps d (1) and d (2).

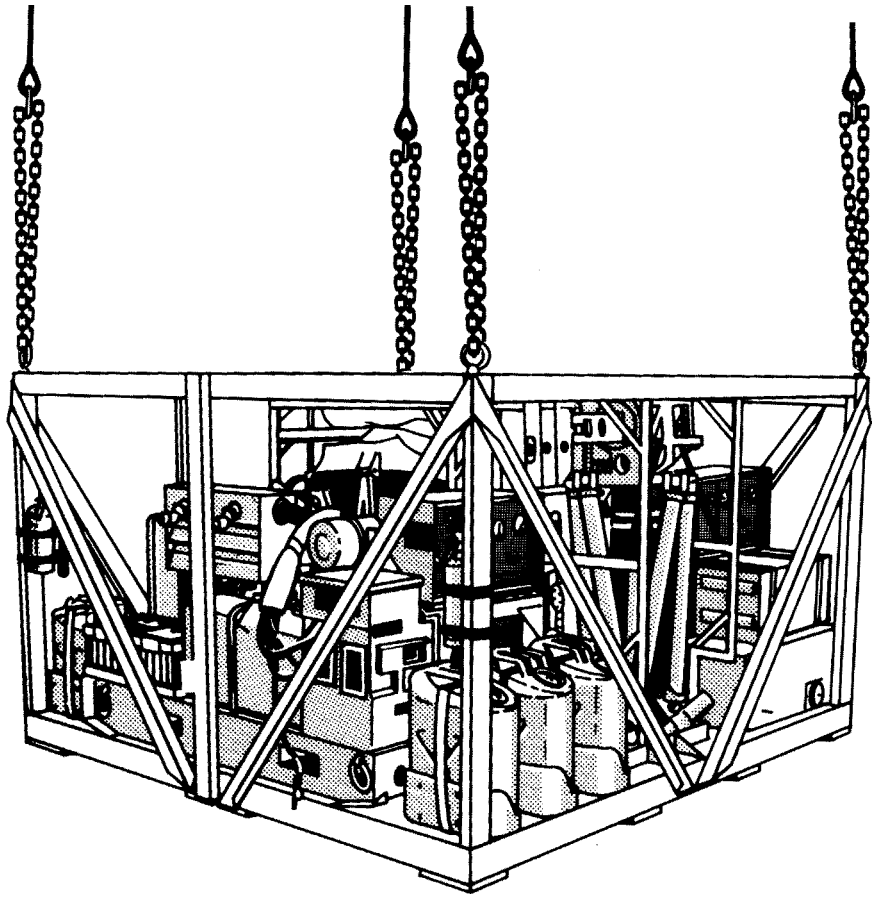

RIGGING STEPS

1. Place two sling legs on apex fitting number 1. Position apex fitting number 1 on top of the generator pallet.

2. Loop the chain end of the left and right sling legs through their respective front lift provisions located on the front corner of the pallet. Place the correct link from Table 12-4 in the grab hook.

3. Place two sling legs on apex fitting number 2. Position apex fitting number 1 on top of the generator pallet.

4. Loop the chain end of the left and right sling legs through their respective rear lift provisions located on the rear corners of the pallet. Place the correct link from Table 12-4 in the grab hook.

5. Raise the apex fittings above the load. Cluster and tie or tape (breakaway technique) the sling legs in each sling set together to prevent entanglement during hookup and lift-off.

Figure 12-4. Lightweight Generator Frame Assembly

CHAPTER 13

CERTIFIED DUAL-POINT RIGGING PROCEDURES FOR MISCELLANEOUS EQUIPMENT

13-1. INTRODUCTION

This chapter contains rigging procedures for dual-point lift of miscellaneous equipment that has been certified for sling load. Each rigging procedure is found in a paragraph that includes a description of the load, materials required for rigging, and steps to complete the procedure. An applicability paragraph is also a part of each paragraph and identifies the certified loads. The certified dual-point rigging procedures for miscellaneous equipment are in this section. Paragraphs 13-2 through 13-6 give detailed instructions for rigging loads.

NOTE: Reach Pendants may be used on dual point loads. Place a Reach Pendant on each apex fitting. A static discharge person is not required when using a Reach Pendant.

13-2. Palletized Loading System (PLS), M1077 Flatrack, Loaded

a. Applicability. The following item in Table 13-1 is certified for the helicopter(s) listed in the following table by the US Army Soldier Systems Center:

Table 13-1. Palletized Loading System (PLS), M1077 Flatrack, Loaded

NOMENCLATURE	WEIGHT (POUNDS)	SLING SET	LINK COUNT FRONT/ REAR	TYPE OF AIRCRAFT	RECOMMENDED AIRSPEED (KNOTS)
Palletized Loading System (PLS), M1077 Flatrack, Loaded	MIN: 6,500 MAX: 20,000	10K 25K	3/10 5/10	CH-47	120

b. Materials. The following materials are required to rig this load:

(1) Sling set (10,000-pound capacity) with one additional apex fitting.

OR

(2) Sling set (25,000-pound capacity) with one additional apex fitting.

(3) Tape, adhesive, pressure-sensitive, 2-inch wide roll.

(4) Cord, nylon, Type III, 550-pound breaking strength.

(5) Webbing, cotton, 1/4-inch, 80-pound breaking strength.

(6) PLS operating manual.

(7) Strap, cargo, tiedown, CGU-1/B (as required).

c. Personnel. Two persons can prepare and rig this load in 20 minutes.

d. Procedures. The following procedures apply to this load:

(1) Preparation. Prepare the load using the following steps:

NOTE: During the following steps, observe all CAUTIONS and WARNINGS noted in the Operating Manual.

(a) Position the load on the Flatrack, distributing the weight as evenly as posible.

(b) Restrain the cargo with CGU-1/B cargo tiedown straps.

(2) Rigging. Rig the load according to the steps in Figure 13-1.

NOTE: The A-frame end is considered the Aft end of the load.

(3) Hookup. Two hookup teams stand on top of the load. The static discharge person discharges the static electricity. The forward hookup person, (non-A-frame end), places apex fitting 1 onto the forward cargo hook. The aft hookup person places apex fitting 2 onto the aft cargo hook. The hookup teams then carefully dismount the pallet and remain close to the load as the helicopter removes slack from the sling legs. When successful hookup is assured, the hookup teams quickly exit the area underneath the helicopter to the designated rendezvous point.

(4) Derigging. Derigging is the reverse of the preparation and rigging procedures in steps d (1) and d (2).

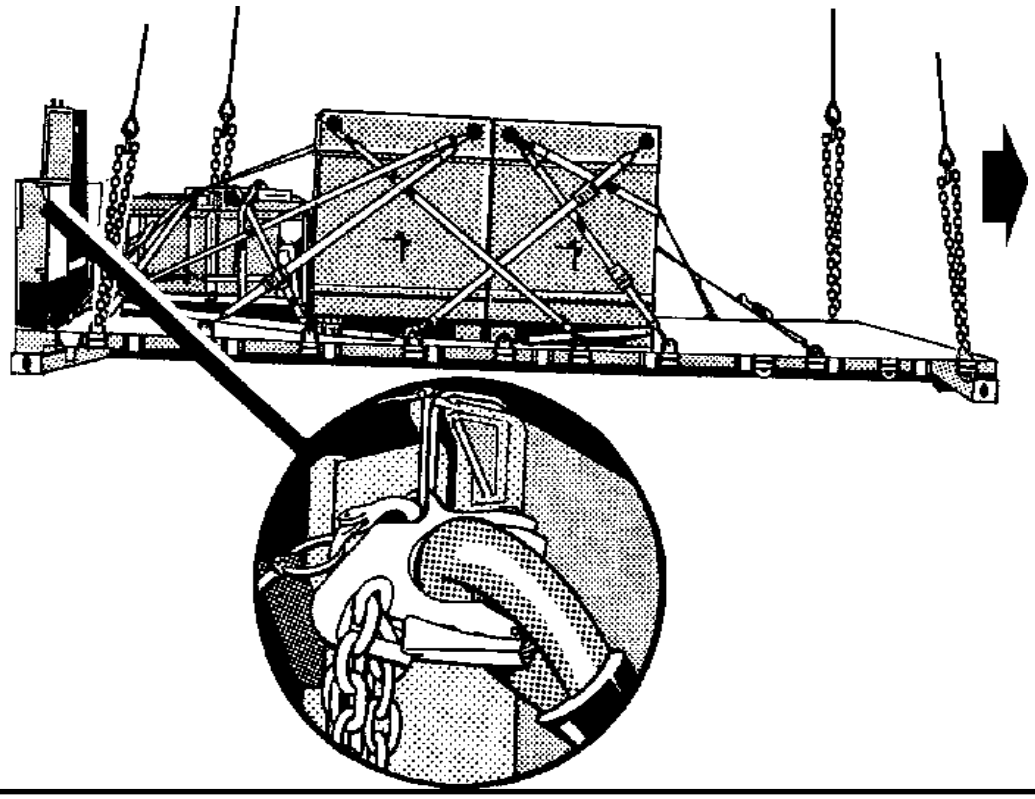

RIGGING STEPS

1. Place two sling legs on apex fitting number 1. Position apex fitting number 1 on top of the load (non A-frame end).

2. Loop the chain end of the left and right sling legs through their respective lift provision (tiedown ring closest to the end). Place the correct link from Table 13-1 in the grab hook.

3. Place two sling legs on apex fitting number 2. Position apex fitting number 2 on top of the load (A-frame end).

4. Loop the chain end of the left and right sling legs through their respective lift provision (tiedown ring closest to the end). Place the correct link from Table 13-1 in the grab hook. Secure the excess chain with tape or Type III nylon cord.

5. Tie (breakaway technique) the rear grab hooks to the A-frame.

6. Raise the apex fittings above the load. Cluster and tie or tape (breakaway technique) the sling legs in each sling set together to prevent entanglement during hookup and lift-off.

Figure 13-1. Palletized Loading System (PLS), M1077 Flatrack, Loaded

13-3. Palletized Loading System (PLS), M1077 Flatrack, Empty

a. Applicability. The following items in Table 13-2 are certified for the helicopter(s) listed in the following table by the US Army Soldier Systems Center:

Table 13-2. Palletized Loading System (PLS), M1077 Flatrack, Empty

NOMENCLATURE	MAX WEIGHT (POUNDS)	SLING SET	LINK COUNT FRONT/ REAR	TYPE OF AIRCRAFT	RECOMMENDED AIRSPEED (KNOTS)
Two M1077 Flatracks, Empty, Stacked	6,500	10K	3/10	CH-47	120
Three M1077 Flatracks, Empty, Stacked	9,750	10K	3/10	CH-47	120

b. Materials. The following materials are required to rig this load:

(1) Sling set (10,000-pound capacity) with one additional apex fitting.

(2) Tape, adhesive, pressure-sensitive, 2-inch wide roll.

(3) Cord, nylon, Type III, 550-pound breaking strength.

(4) Webbing, cotton, 1/4-inch, 80-pound breaking strength.

(5) PLS operating manual.

c. Personnel. Two persons can prepare and rig this load in 30 minutes.

d. Procedures. The following procedures apply to this load:

(1) Preparation. Prepare the load using the following steps:

NOTE: During the following steps, observe all CAUTIONS and WARNINGS noted in the Operating Manual.

(a) Position the flatracks one on top of the other, if required, and engage the twist locks as described in the operating manual.

(b) Safety tie the twist lock handles with Type III nylon cord to an adjacent cargo tiedown provision.

(2) Rigging. Rig the load according to the steps in Figure 13-2.

NOTE: The A-frame end is considered the Aft end of the load.

WARNING

Ensure the slings are attached to the bottom-most lift provisions for load securement and stability.

(3) Hookup. Two hookup teams stand on top of the load. The static discharge person discharges the static electricity. The forward hookup person (non-A-frame end) places apex fitting 1 onto the forward cargo hook. The aft hookup person places apex fitting 2 onto the aft cargo hook. The hookup teams then carefully dismount the pallet and remain close to the load as the helicopter removes slack from the sling legs. When successful hookup is assured, the hookup teams quickly exit the area underneath the helicopter to the designated rendezvous point.

(4) Derigging. Derigging is the reverse of the preparation and rigging procedures in steps d (1) and d (2).

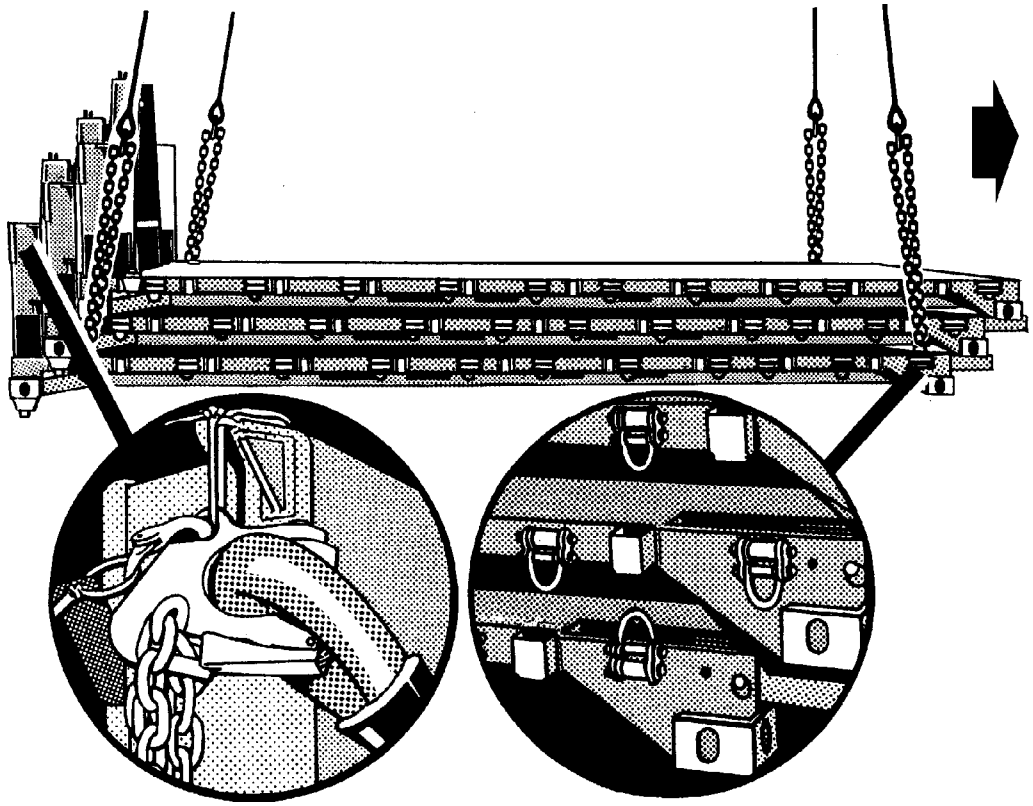

RIGGING STEPS

1. Place two sling legs on apex fitting number 1. Position apex fitting number 1 on top of the load (non A-frame end).

2. Loop the chain end of the left and right sling legs through their respective lift provision (tiedown ring closest to the end). Place the correct link from Table 13-2 in the grab hook.

3. Place two sling legs on apex fitting number 2. Position apex fitting number 2 on top of the load (A-frame end).

4. Loop the chain end of the left and right sling legs through their respective lift provision (tiedown ring closest to the end). Place the correct link from Table 13-2 in the grab hook. Secure the excess chain with tape or Type III nylon cord.

5. Tie (breakaway technique) the rear grab hooks to the A-frame.

6. Raise the apex fittings above the load. Cluster and tie or tape (breakaway technique) the sling legs in each sling set together to prevent entanglement during hookup and lift-off.

Figure 13-2. Palletized Loading System (PLS), M1077 Flatrack, Empty

13-4. Enhanced Palletized Loading System, Flatrack, Loaded

a. Applicability. The following item in Table 13-3 is certified for the helicopter(s) listed in the following table by the US Army Soldier Systems Center:

Table 13-3. Enhanced Palletized Loading System, Flatrack, Loaded

NOMENCLATURE	MAX WEIGHT (POUNDS)	SLING SET	LINK COUNT FRONT/ REAR	TYPE OF AIRCRAFT	RECOMMENDED AIRSPEED (KNOTS)
Enhanced Palletized Loading System, Flatrack, Loaded	Min: 10,500 Max: 22,000	25K	3/20	CH-47	80

b. Materials. The following materials are required to rig this load:

(1) Sling set (25,000-pound capacity) with one additional apex fitting.

(2) Tape, adhesive, pressure-sensitive, 2-inch wide roll.

(3) Cord, nylon, Type III, 550-pound breaking strength.

(4) Webbing, cotton, 1/4-inch, 80-pound breaking strength.

(5) PLS operating manual.

(6) Strap, cargo, tiedown, CGU-1/B (as required).

c. Personnel. Two persons can prepare and rig this load in 30 minutes.

d. Procedures. The following procedures apply to this load:

(1) Preparation. Prepare the load using the following steps:

NOTE: During the following steps, observe all CAUTIONS and WARNINGS noted in the operating manual.

(a) PLS personnel raise the end walls in accordance with TM 9-3990-206-14&P. The twist locks must be in the stowage position.

(b) Position the load on the flatrack, distributing the weight as evenly as posible.

(c) Restrain the cargo with CGU-1/B cargo tiedown straps.

(2) Rigging. Rig the load according to the steps in Figure 13-3.

NOTE: The A-frame end is considered the Aft end of the load.

(3) Hookup. Two hookup teams stand on top of the load. The static discharge person discharges the static electricity. The forward hookup person (non-A-frame end) places apex fitting 1 onto the forward cargo hook. The aft hookup person places apex fitting 2 onto the aft cargo hook. The hookup teams then carefully dismount the pallet and remain close to the load as the helicopter removes slack from the sling legs. When successful hookup is assured, the hookup teams quickly exit the area underneath the helicopter to the designated rendezvous point.

(4) Derigging. Derigging is the reverse of the preparation and rigging procedures in steps d (1) and d (2).

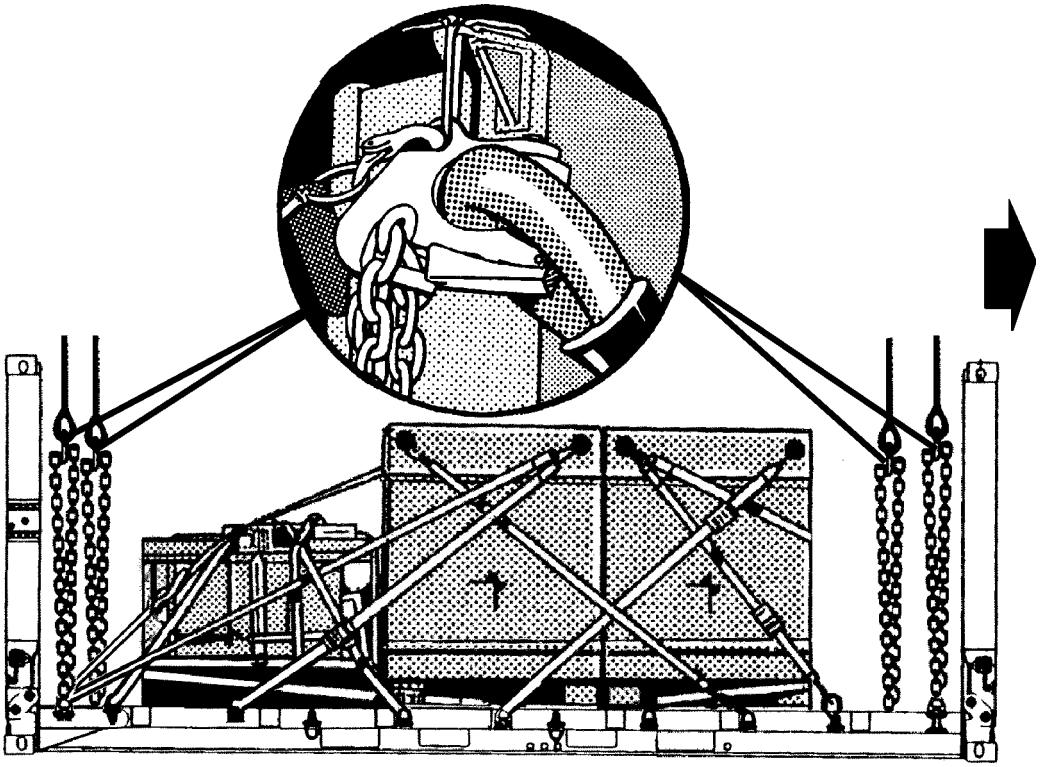

RIGGING STEPS

1. Place two sling legs on apex fitting number 1. Position apex fitting number 1 on top of the load (end wall end).

2. Loop the chain end of the left and right sling legs through their respective lift provision (tiedown ring closest to the end wall). Place the correct link from Table 13-3 in the grab hook.

3. Place two sling legs on apex fitting number 2. Position apex fitting number 2 on top of the load (A-frame end).

4. Loop the chain end of the left and right sling legs through their respective lift provision (tiedown ring closest to the A-frame end). Place the correct link from Table 13-3 in the grab hook. Secure the excess chain with tape or Type III nylon cord.

5. Tie (breakaway technique) the grab hooks to the end walls.

6. Raise the apex fittings above the load. Cluster and tie or tape (breakaway technique) the sling legs in each sling set together to prevent entanglement during hookup and lift-off.

Figure 13-3. Enhanced Palletized Loading System, Flatrack, Loaded

13-5. Enhanced Palletized Loading System, Flatrack, Empty

a. Applicability. The following items in Table 13-4 are certified for the helicopter(s) listed in the following table by the US Army Soldier Systems Center:

Table 13-4. Enhanced Palletized Loading System, Flatrack, Empty

NOMENCLATURE	MAX WEIGHT (POUNDS)	SLING SET	LINK COUNT FRONT/ REAR	TYPE OF AIRCRAFT	RECOMMENDED AIRSPEED (KNOTS)
One Enhanced Flatrack, Empty	7,400	25K	3/20	CH-47	80
Two Enhanced Flatracks, Empty, Stacked	14,800	25K	3/20	CH-47	80

b. Materials. The following materials are required to rig this load:

(1) Sling set (25,000-pound capacity) with one additional apex fitting.

(2) Tape, adhesive, pressure-sensitive, 2-inch wide roll.

(3) Cord, nylon, Type III, 550-pound breaking strength.

(4) Webbing, cotton, 1/4-inch, 80-pound breaking strength.

(5) PLS operating manual.

(6) Strap, cargo, tiedown, CGU-1/B (4 each).

c. Personnel. Two persons can prepare and rig this load in 20 minutes.

d. Procedures. The following procedures apply to this load:

(1) Preparation. Prepare the load using the following steps:

NOTE: During the following steps, observe all CAUTIONS and WARNINGS noted in the operating manual.

(a) PLS personnel should lower both end walls on all enhanced flatracks in accordance with the operating manual.

(b) Position the flatracks one on top of the other, if required, and engage the twist locks as described in the operating manual.

(c) Attach a tiedown strap on the fourth tiedown ring on the bottom flatrack. Route the strap over the end wall on the top flatrack and secure the strap to the fourth tiedown ring on the other side of the bottom flatrack. Tighten the strap and secure the excess with tape. Repeat this procedure using the third set of tiedown rings.

(d) Repeat the above procedure on the other end of the flatrack.

(2) Rigging. Rig the load according to the steps in Figure 13-4.

(3) Hookup. Two hookup teams stand on top of the load. The static discharge person discharges the static electricity. The forward hookup person places apex fitting 1 onto the forward cargo hook. The aft hookup person places apex fitting 2 onto the aft cargo hook. The hookup teams then carefully dismount the pallet and remain close to the load as the helicopter removes slack from the sling legs. When successful hookup is assured, the hookup teams quickly exit the area underneath the helicopter to the designated rendezvous point.

(4) Derigging. Derigging is the reverse of the preparation and rigging procedures in steps d (1) and d (2).

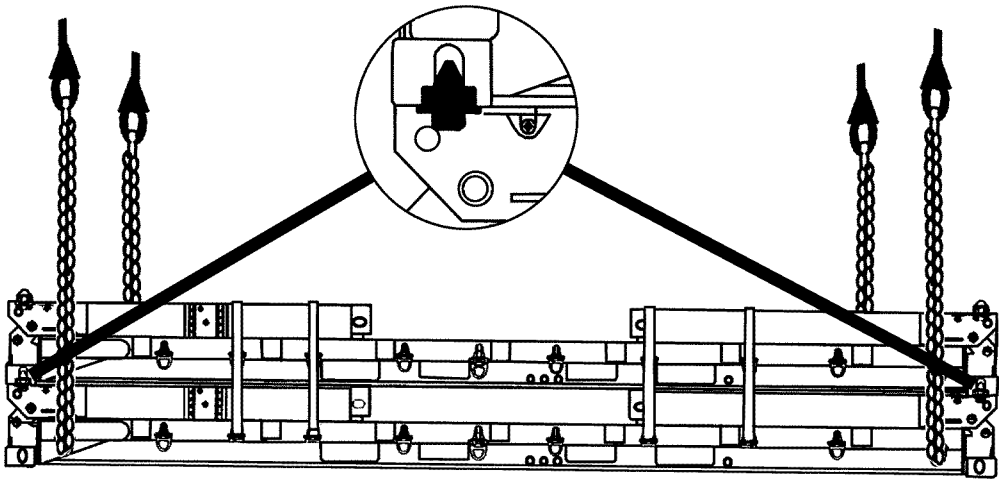

RIGGING STEPS

1. Place two sling legs on apex fitting number 1. Position apex fitting number 1 on top of the load.

2. Loop the chain end of the left and right sling legs through their respective lift provision on the bottom pallet (tiedown ring closest to the end). Place the correct link from Table 13-4 in the grab hook.

3. Place two sling legs on apex fitting number 2. Position apex fitting number 2 on top of the load.

4. Loop the chain end of the left and right sling legs through their respective lift provision on the bottom pallet (tiedown ring closest to the end). Place the correct link from Table 13-4 in the grab hook. Secure the excess chain with tape or Type III nylon cord.

5. Tie (breakaway technique) the rear grab hooks to the A-frame.

6. Raise the apex fittings above the load. Cluster and tie or tape (breakaway technique) the sling legs in each sling set together to prevent entanglement during hookup and lift-off.

Figure 13-4. Enhanced Palletized Loading System, Flatrack, Empty

13-6. Naval Special Warfare Rigid Inflatable Boat (NSWRIB) with or without Trailer

a. Applicability. The following items in Table 13-5 are certified for the helicopter(s) listed in the following table by the US Army Soldier Systems Center:

Table 13-5. Naval Special Warfare Rigid Inflatable Boat (NSWRIB) with or without Trailer

NOMENCLATURE	WEIGHT RANGE (POUNDS)	SLING SET	LINK COUNT FRONT/ REAR	TYPE OF AIRCRAFT	RECOMMENDED AIRSPEED (KNOTS)
Naval Special Warfare Rigid Inflatable Boat without Trailer	15,070- 18,230	25K 40K	7/61 3/45	CH-47 CH-53	70
Naval Special Warfare Rigid Inflatable Boat with Trailer	19,240- 22,400	25K 40K	7/61 3/45	CH-47 CH-53	70

b. Materials. The following materials are required to rig this load:

(1) Sling set (25,000-pound capacity) with one additional apex fitting.

OR

(2) Sling set (40,000-pound capacity) with one additional apex fitting.

(3) Tape, adhesive, pressure-sensitive, 2-inch wide roll.

(4) Cord, nylon, Type III, 550-pound breaking strength.

(5) Webbing, cotton, 1/4-inch, 80-pound breaking strength.

c. Personnel. Two persons can prepare and rig this load in 10 minutes.

d. Procedures. The following procedures apply to this load:

(1) Preparation. Prepare the load using the following steps:

NOTE: These loads may be flown with the sponsons inflated or deflated.

(a) Rotate the aft seat rack forward and secure it to the aft engine hand rail with Type III nylon cord.

(b) Secure the aft engine hand rail, lids, doors, and caps with tape or Type III nylon cord.

NOTE: When sling loading the NSWRIB off the trailer, ensure all the straps as well as the hard point connection that connects the boat to the trailer are disconnected.

NOTE: When sling loading the NSWRIB with trailer add the following procedures.

(c) Ensure the NSWRIB is properly secured to the trailer with the straps provided with the trailer.

1. There are five connection points on the boat (two on each side and one in the front) and nine connection points on the trailer (four on each side and one in the front).

2. The straps provided with the trailer should be 12,000-pound nylon webbing with 10,000-pound hooks on each end. An 11,000-pound load binder should also be used with the strap.

(d) Secure safety chains, intervehicular electrical cables, and brake cables on top of the drawbar tape or Type III nylon cord.

(e) Lower the lunette close to the ground and secure it in place with a 5,000-pound tiedown strap and load binder.

(f) Engage the parking brake and secure it in the engaged position.

(2) Rigging. Rig the load according to the steps in Figure 13-5.

NOTE: This load is flown with the bow of the boat in front.

(3) Hookup. Two hookup teams stand on deck of the boat. The static discharge person discharges the static electricity. The forward hookup person places apex fitting 1 onto the forward cargo hook. The aft hookup person places apex fitting 2 onto the aft cargo hook. The hookup teams then carefully dismount the boat and remain close to the load as the helicopter removes slack from the sling legs. When successful hookup is assured, the hookup teams quickly exit the area underneath the helicopter to the designated rendezvous point.

(4) Derigging. Derigging is the reverse of the preparation and rigging procedures in steps d (1) and d (2).

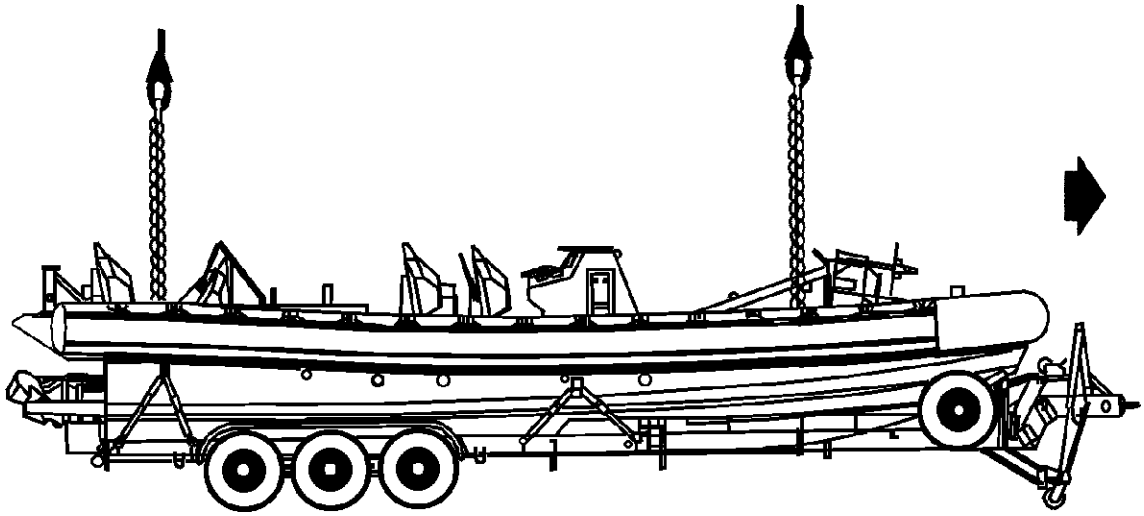

RIGGING STEPS

1. Place two sling legs on apex fitting number 1. Position apex fitting number 1 on the bow of the boat.

2. Loop the chain end of the left and right sling legs through their respective lift provisions on the front of the deck. Place the correct link from Table 13-5 in the grab hook. Secure the excess chain with tape or Type III nylon cord.

3. Place two sling legs on apex fitting number 2. Position apex fitting number 2 on the deck at the stern of the boat.

4. Loop the chain end of the left and right sling legs through their respective lift provision on the stern of the boat. Place the correct link from Table 13-5 in the grab hook. Secure the excess chain with tape or Type III nylon cord.

5. Raise the apex fittings above the load. Cluster and tie or tape (breakaway technique) the sling legs in each sling set together to prevent entanglement during hookup and lift-off.

Figure 13-5. Naval Special Warfare Rigid Boat (NSWRIB) with or without Trailer

CHAPTER 14

SUITABLE DUAL-POINT RIGGING PROCEDURES

14-1. INTRODUCTION

This chapter contains rigging procedures for dual-point lift of loads that are suitable for sling load. Each rigging procedure is found in a paragraph that includes a description of the load, materials required for rigging, and steps to complete the procedure. An applicability paragraph is also a part of each paragraph and identifies the suitable loads. The dual-point rigging procedures for suitable loads are in this section. Paragraphs 14-2 through 14-6 give detailed instructions for rigging loads.

NOTE: Reach Pendants may be used on dual point loads. Place a Reach Pendant on each apex fitting. A static discharge person is not required when using a Reach Pendant.

14-2. M35A1/A2 2 1/2-Ton Cargo Truck

a. Applicability. The following item in Table 14-1 is suitable for sling loading by the helicopter(s) listed in the following table:

WARNING

DO NOT LIFT THIS LOAD WITH THE ORIGINAL VEHICLE LIFT PROVISIONS

Table 14-1. M35A1/A2 2 1/2-Ton Cargo Truck

NOMENCLATURE	MAX WEIGHT (POUNDS)	SLING SET	LINK COUNT FRONT/ REAR	TYPE OF AIRCRAFT	RECOMMENDED AIRSPEED (KNOTS)
M35A1/A2 2 1/2-Ton Cargo Truck	13,180	25K	35/3	CH-47	90

b. Materials. The following materials are required to rig this load:

(1) Sling set (25,000-pound capacity) with one additional apex fitting.

(2) Tape, adhesive, pressure-sensitive, 2-inch wide roll.

(3) Cord, nylon, Type III, 550-pound breaking strength.

(4) Webbing, cotton, 1/4-inch, 80-pound breaking strength.

(5) Strap, cargo, tiedown, CGU-1/B (as required).

c. Personnel. Two persons can prepare and rig this load in 15 minutes.

d. Procedures. The following procedures apply to this load:

(1) Preparation. Prepare the load using the following steps:

(a) Remove the cargo compartment canvas and bows. Secure the canvas and bows in the bed of the truck.

(b) Remove the cab top canvas, lower the windshield, fold the canvas over the windshield, and secure with Type III nylon cord.

(c) Secure the windshield in the down position with the CGU-1/B cargo tiedown strap.

(d) Safety tie the hood closed with Type III nylon cord around the hood latch and the grill.

(e) Ensure the fuel, oil filler, radiator, and battery caps are properly installed and secured. Ensure the battery compartment door is closed. Ensure the fuel tank is not over 3/4 full.

(f) Secure the seat cushions and doors with Type III nylon cord.

(g) Engage the emergency brake and place the transmission in neutral.

(h) Straighten the front wheels and secure the steering wheel with Type III nylon cord.

(2) Rigging. Rig the load according to the steps in Figure 14-1.

NOTE: Ensure the hook on the grab hook faces away from the vehicle.

(3) Hookup. Two hookup teams are used for this load. The static discharge person discharges the static electricity. The forward hookup person stands on the passenger seat and places apex fitting 1 onto the forward cargo hook. The aft hookup person stands in the truck bed and places apex fitting 2 onto the aft cargo hook. The hookup teams then carefully dismount the load and remain close to the load as the helicopter removes slack from the sling legs. When successful hookup is assured, the hookup teams quickly exit the area underneath the helicopter to the designated rendezvous point.

(4) Derigging. Derigging is the reverse of the preparation and rigging procedures in steps d (1) and d (2).

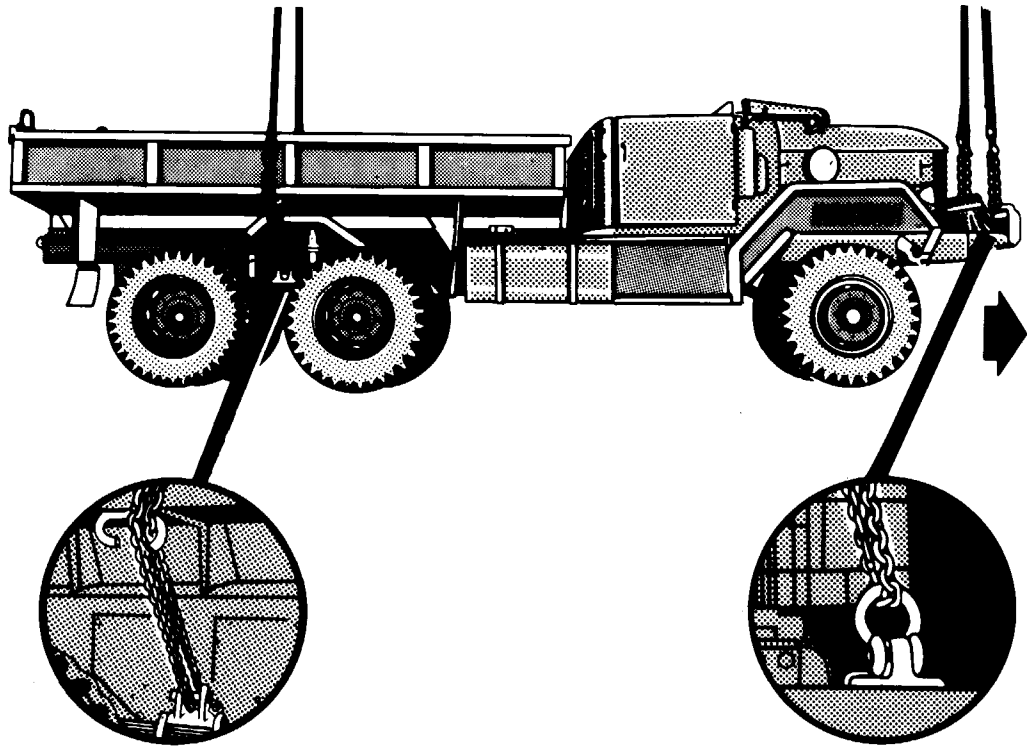

RIGGING STEPS

1. Place two sling legs on apex fitting number 1. Position apex fitting number 1 on top of the hood.

2. Loop the chain end of the left and right sling legs through their respective lift provision located on the front bumper. Place the correct link from Table 14-1 in the grab hook. Secure the excess chain with tape or Type III nylon cord.

3. Place two sling legs on apex fitting number 2. Position apex fitting number 2 on the cargo bed.

4. Loop the chain end of the left and right sling legs through their respective lift provision located on top of the spring housing between the rear wheels. Place the correct link from Table 14-1 in the grab hook.

5. Pull each grab hook up against the side of the truck and tie the chain in the chain guide bracket. Pull both grab hooks together over top of the bed and tie together with 1/4-inch cotton webbing.

6. Raise the apex fittings above the load. Cluster and tie or tape (breakaway technique) the sling legs in each sling set together to prevent entanglement during hookup and lift-off.

Figure 14-1. M35A1/A2 2 1/2-Ton Cargo Truck

14-3. M149-Series Water Trailer

a. Applicability. The following items in Table 14-2 are suitable for sling loading by the helicopter(s) listed in the following table:

Table 14-2. M149-Series Water Trailer

NOMENCLATURE	MAX WEIGHT (POUNDS)	SLING SET	LINK COUNT FRONT/ REAR	TYPE OF AIRCRAFT	RECOMMENDED AIRSPEED (KNOTS)
Water Trailer, M149/M149A1	MIN: 2,540 MAX: 6,060	10K	3/3	CH-47	60
Water Trailer, M149A2	MIN: 2,800 MAX: 6,320	10K	3/3	CH-47	60

WARNING
THE M149, M149A1, AND M149A2 WATER TRAILERS, WITHOUT THE MODIFIED CLEVIS TYPE LIFT PROVISIONS, ARE NOT CERTIFIED FOR SLING LOADING BECAUSE OF INADEQUATE LIFT PROVISION STRENGTH WHEN THE TRAILER IS FULL

b. Materials. The following materials are required to rig this load:

(1) Sling set (10,000-pound capacity) with one additional apex fitting.

(2) Tape, adhesive, pressure-sensitive, 2-inch wide roll.

(3) Cord, nylon, Type III, 550-pound breaking strength.

(4) Webbing, cotton, 1/4-inch, 80-pound breaking strength.

c. Personnel. Two persons can prepare and rig this load in 10 minutes.

d. Procedures. The following procedures apply to this load:

(1) Preparation. Prepare the load using the following steps:

(a) Secure the light cable and air hoses to the drawbar with tape or Type III nylon cord.

(b) Place the support leg and wheel in the down position.

(c) Tape the top edge of the rear of the water tank.

(d) Engage both hand brakes. Close and secure the fill port and tape if necessary.

(2) Rigging. Rig the load according to the steps in Figure 14-2.

(3) Hookup. Two hookup teams are used for this load. The static discharge person discharges the static electricity. The forward hookup person stands on the fender and places apex fitting 2 onto the forward cargo hook. The aft hookup person stands on the tongue and places apex fitting 1 onto the aft cargo hook. The hookup teams then carefully dismount the load and remain close to the load as the helicopter removes slack from the sling legs. When successful hookup is assured, the hookup teams quickly exit the area underneath the helicopter to the designated rendezvous point.

(4) Derigging. Derigging is the reverse of the preparation and rigging procedures in steps d (1) and d (2).

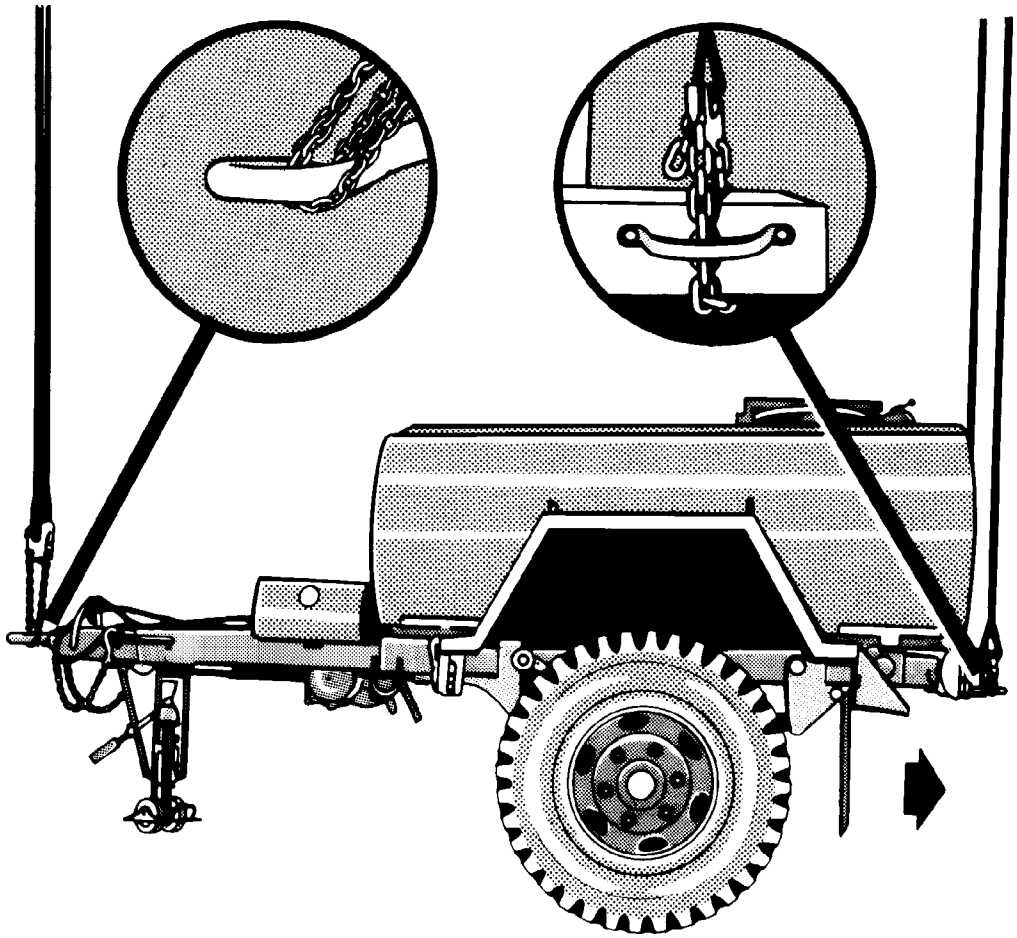

RIGGING STEPS

1. Place two sling legs on apex fitting number 1. Position apex fitting number 1 on top of the water tank.

2. Loop the chain end of the left and right sling legs through the lunette. Place the correct link from Table 14-2 in the grab hook.

3. Place two sling legs on apex fitting number 2. Position apex fitting number 2 on top of the water tank
.

4. Using the rear lift provisions as a guide to keep the chains in place, route the chain end of the left sling leg down between the tank and the crossmember, under the rear crossmember, and back up through the lift provision. Place the correct link from Table 14-2 in the grab hook. Repeat the procedure with the right chain leg and the right rear lift provision.

5. Raise the apex fittings above the load. Cluster and tie or tape (breakaway technique) the sling legs in each sling set together to prevent entanglement during hookup and lift-off.

Figure 14-2. M149-Series Water Trailer

14-4. M114A1 155-mm Howitzer

a. Applicability. The following item in Table 14-3 is suitable for sling loading by the helicopter(s) listed in the following table:

Table 14-3. M114A1 155-mm Howitzer

NOMENCLATURE	MAX WEIGHT (POUNDS)	SLING SET	LINK COUNT FRONT/ REAR	TYPE OF AIRCRAFT	RECOMMENDED AIRSPEED (KNOTS)
M114A1 155-mm Howitzer	12,660	25K	55/3	CH-47	90

b. Materials. The following materials are required to rig this load:

(1) Sling set (25,000-pound capacity) with one additional apex fitting.

(2) Tape, adhesive, pressure-sensitive, 2-inch wide roll.

(3) Cord, nylon, Type III, 550-pound breaking strength.

(4) Webbing, cotton, 1/4-inch, 80-pound breaking strength.

(5) Clevis assembly, large, MS 70087-3 (1 each).

(6) Strap, cargo, tiedown, CGU-1/B (as required).

c. Personnel. Two persons can prepare and rig this load in 15 minutes.

d. Procedures. The following procedures apply to this load:

(1) Preparation. Prepare the load using the following steps:

(a) Stow all howitzer equipment, including sights, in thier proper place except the spade key. Stow the spade key in the section chest. Secure all equipment with tape or Type III nylon cord.

(b) Secure the section chest on the rear of the trails by routing a CGU-1/B tiedown strap through the handles of the chest and both trail lifting handles. Secure the excess strap with tape.

(c) Secure the spades to the brackets with Type III nylon cord. Secure all cables and hoses to the trail sides with tape or Type III nylon cord.

(d) Secure the trail latching handle in the closed position with Type III nylon cord and insert the trail locking pin.

(e) Position the ballistic shield in the raised position and remove and secure all gun covers.

(f) Engage the hand brake.

(2) Rigging. Rig the load according to the steps in Figure 14-3.

(3) Hookup. Two hookup teams are used for this load. The static discharge person discharges the static electricity. The forward hookup person stands on the wheels and places apex fitting 1 onto the forward cargo hook. The aft hookup person stands on the trails and places apex fitting 2 onto the aft cargo hook. The hookup teams then carefully dismount the load and remain close to the load as the helicopter removes slack from the sling legs. When successful hookup is assured, the hookup teams quickly exit the area underneath the helicopter to the designated rendezvous point.

(4) Derigging. Derigging is the reverse of the preparation and rigging procedures in steps d (1) and d (2).

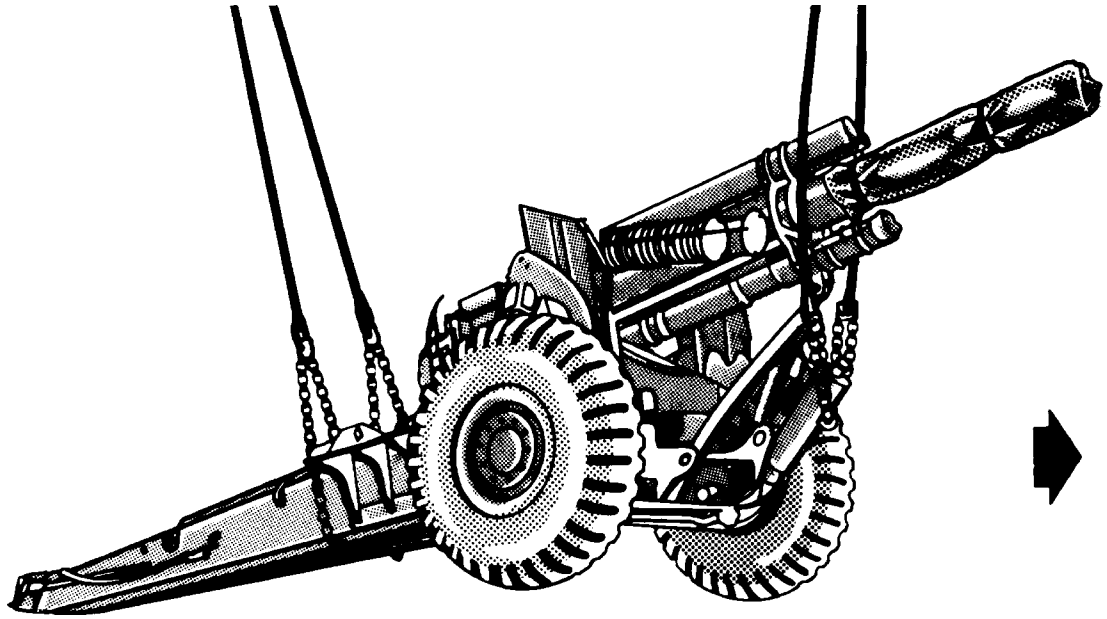

RIGGING STEPS

1. Place two sling legs on apex fitting number 1. Position apex fitting number 1 on top of the barrel.

2. Loop the chain end of the left sling leg through the firing jack locking pin receiver. Place the correct link from Table 14-3 in the grab hook. Repeat the procedure with the right sling leg on the right side of the barrel. Secure the excess chain with tape or Type III nylon cord.

3. Place two sling legs on apex fitting number 2. Position apex fitting number 2 on top of the breech.

4. Route the chain end of the left sling leg through the large clevis, down through the center of the trails, under the left trail, and up through the spade key bracket on the outside of the left trail. Place the correct link from Table 14-3 in the grab hook.

5. Route the chain end of the other sling leg through the large clevis, down through the center of the trails, under the right trail, and up through the aft spade key bracket on the outside of the right trail. Place the correct link from Table 14-3 in the grab hook.

6. Raise the apex fittings above the load. Cluster and tie or tape (breakaway technique) the sling legs in each sling set together to prevent entanglement during hookup and lift-off.

Figure 14-3. M114A1 155-mm Howitzer

14-5. One Conex Container

a. Applicability. The following item in Table 14-4 is suitable for sling loading by the helicopter(s) listed in the following table:

Table 14-4. One Conex Container

NOMENCLATURE	MAX WEIGHT (POUNDS)	SLING SET	LINK COUNT FRONT/ REAR	TYPE OF AIRCRAFT	RECOMMENDED AIRSPEED (KNOTS)
One Conex Container	1,578	10K	Listed in Rigging Steps	CH-47	60

b. Materials. The following materials are required to rig this load:

(1) Sling set (10,000-pound capacity) with one additional apex fitting.

(2) Tape, adhesive, pressure-sensitive, 2-inch wide roll.

(3) Cord, nylon, Type III, 550-pound breaking strength.

(4) Webbing, cotton, 1/4-inch, 80-pound breaking strength.

(5) Strap, cargo, tiedown, CGU-1/B (4 each).

c. Personnel. Two persons can prepare and rig this load in 5 minutes.

d. Procedures. The following procedures apply to this load:

(1) Preparation. Prepare the load using the following steps:

(a) Close the conex doors.

(b) Secure the doors with CGU-1/B tiedown straps.

(2) Rigging. Rig the load according to the steps in Figure 14-4.

(3) Hookup. Two hookup teams stand on top of the container. The static discharge person discharges the static electricity. The forward hookup person places apex fitting 1 onto the forward cargo hook. The aft hookup person places apex fitting 2 onto the aft cargo hook. The hookup teams then carefully dismount the load and remain close to the load as the helicopter removes slack from the sling legs. When successful hookup is assured, the hookup teams quickly exit the area underneath the helicopter to the designated rendezvous point.

(4) Derigging. Derigging is the reverse of the preparation and rigging procedures in steps d (1) and d (2).

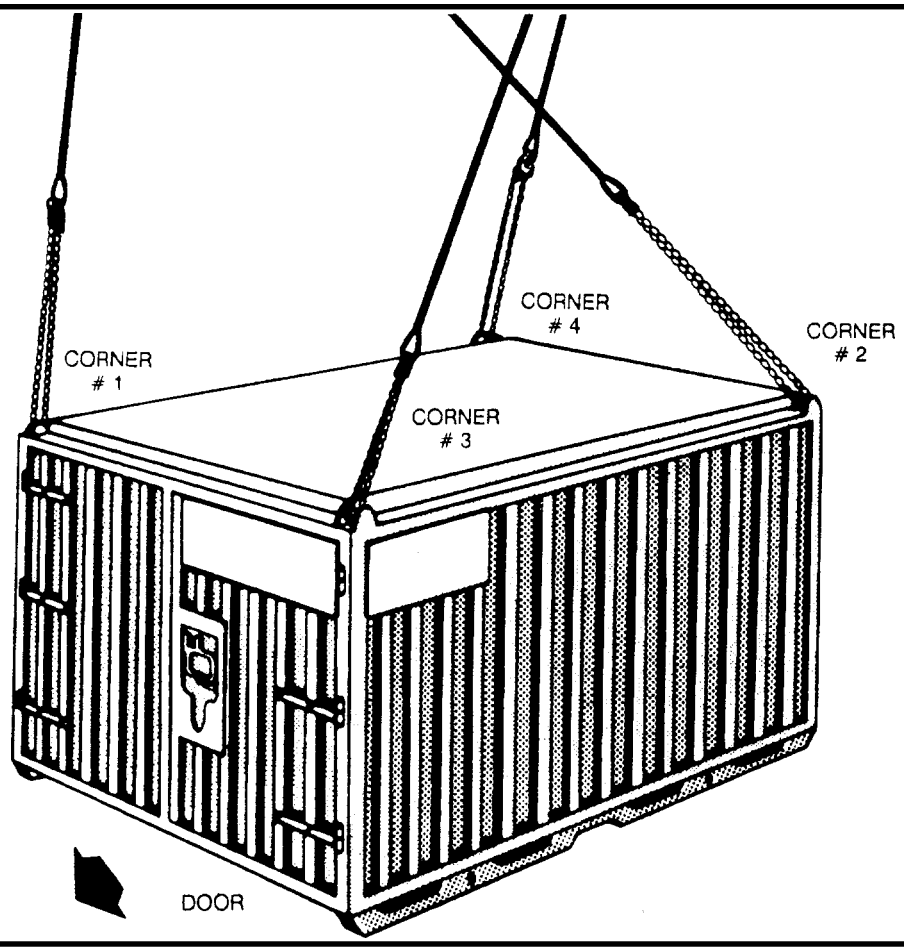

RIGGING STEPS

1. Place two sling legs on apex fitting number 1. Position apex fitting number 1 on top of the door end of the container.

2. Loop the chain end of one sling leg through the lift provision on the top of corner one and insert link 86 in the grab hook. Secure the excess chain with tape or Type III nylon cord.

3. Loop the chain end of the other sling leg through the lift provision on the top of corner 2 and insert link 3 in the grab hook.

4. Place two sling legs on apex fitting number 2. Position apex fitting number 2 on top of the container.

5. Route one sling leg to the outside of sling leg 2 and loop the chain end through the lift provision on the top of corner 3. Insert link 51 in the grab hook. Secure the excess chain with tape or Type III nylon cord.

6. Route the other sling leg to the outside of sling leg 2 and loop the chain end through the lift provision on the top of corner 4. Insert link 86 in the grab hook. Secure the excess chain with tape or Type III nylon cord.

7. Raise the apex fittings above the load. Cluster and tie or tape (breakaway technique) the sling legs in each sling set together to prevent entanglement during hookup and lift-off.

Figure 14-4. One Conex Container

14-6. One MILVAN Container

a. Applicability. The following item in Table 14-5 is suitable for sling loading by the helicopter(s) listed in the following table:

Table 14-5. One MILVAN Container

NOMENCLATURE	MAX WEIGHT (POUNDS)	SLING SET	LINK COUNT FRONT/ REAR	TYPE OF AIRCRAFT	RECOMMENDED AIRSPEED (KNOTS)
One MILVAN Container	4,710	10K	3/33	CH-47	60

b. Materials. The following materials are required to rig this load:

(1) Sling set (10,000-pound capacity) with one additional apex fitting.

(2) Tape, adhesive, pressure-sensitive, 2-inch wide roll.

(3) Cord, nylon, Type III, 550-pound breaking strength.

(4) Webbing, cotton, 1/4-inch, 80-pound breaking strength.

c. Personnel. Two persons can prepare and rig this load in 10 minutes.

d. Procedures. The following procedures apply to this load:

(1) Preparation. Prepare the load by closing and securing the container doors.

(2) Rigging. Rig the load according to the steps in Figure 14-5.

(3) Hookup. Two hookup teams stand on top of the container. The static discharge person discharges the static electricity. The forward hookup person (door end) places apex fitting 1 onto the forward cargo hook. The aft hookup person places apex fitting 2 onto the aft cargo hook. The hookup teams then carefully dismount the load and remain close to the load as the helicopter removes slack from the sling legs. When successful hookup is assured, the hookup teams quickly exit the area underneath the helicopter to the designated rendezvous point.

(4) Derigging. Derigging is the reverse of the preparation and rigging procedures in steps d (1) and d (2).

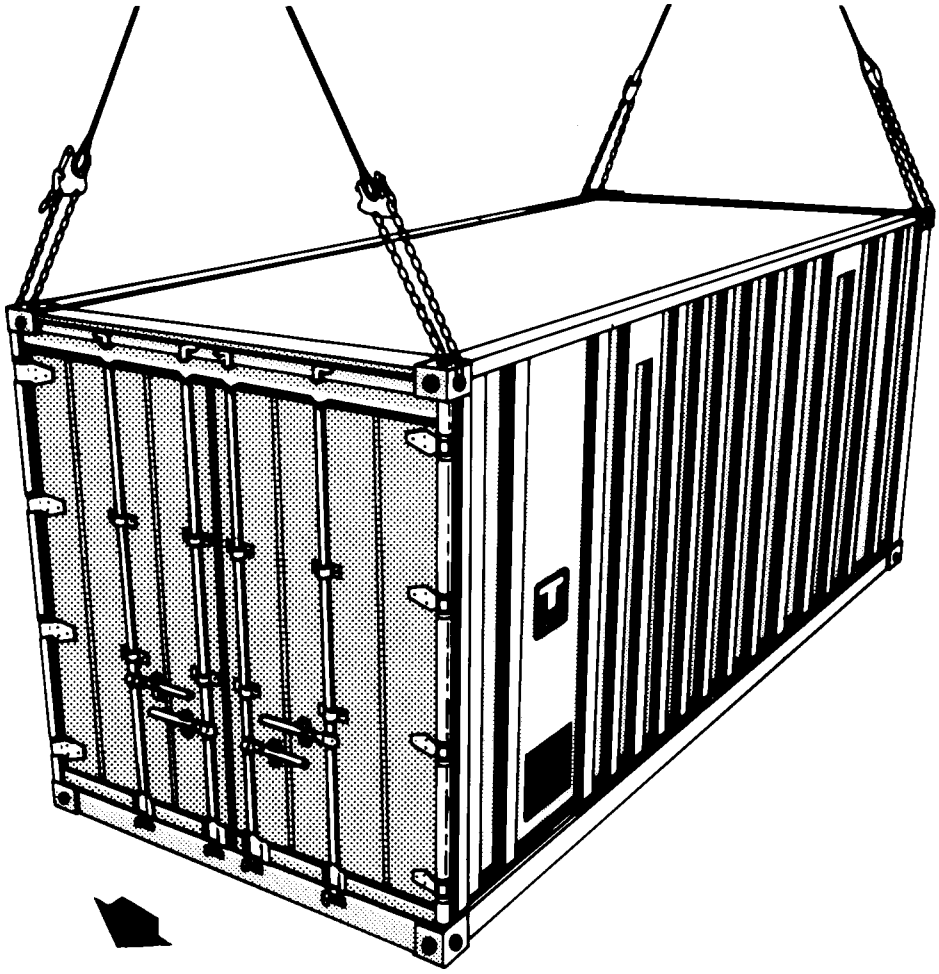

RIGGING STEPS

1. Place two sling legs on apex fitting number 1. Position apex fitting number 1 on top of the container (door end).

2. Loop the chain end of the left and right sling legs through their respective openings on the side of the corner lift provision. Place the correct link from Table 14-5 in the grab hook.

3. Place two sling legs on apex fitting number 2. Position apex fitting number 2 on the container.

4. Loop the chain end of the left and right sling legs through their respective openings on the side of the corner lift provision. Place the correct link from Table 14-5 in the grab hook. Secure the excess chain with tape or Type III nylon cord.

5. Raise the apex fittings above the load. Cluster and tie or tape (breakaway technique) the sling legs in each sling set together to prevent entanglement during hookup and lift-off.

Figure 14-4. One MILVAN Container

APPENDIX A

NATIONAL STOCK NUMBERS FOR SLINGS, NETS, AND SPARE PARTS

10,000-POUND CAPACITY SLING SET AND COMPONENTS

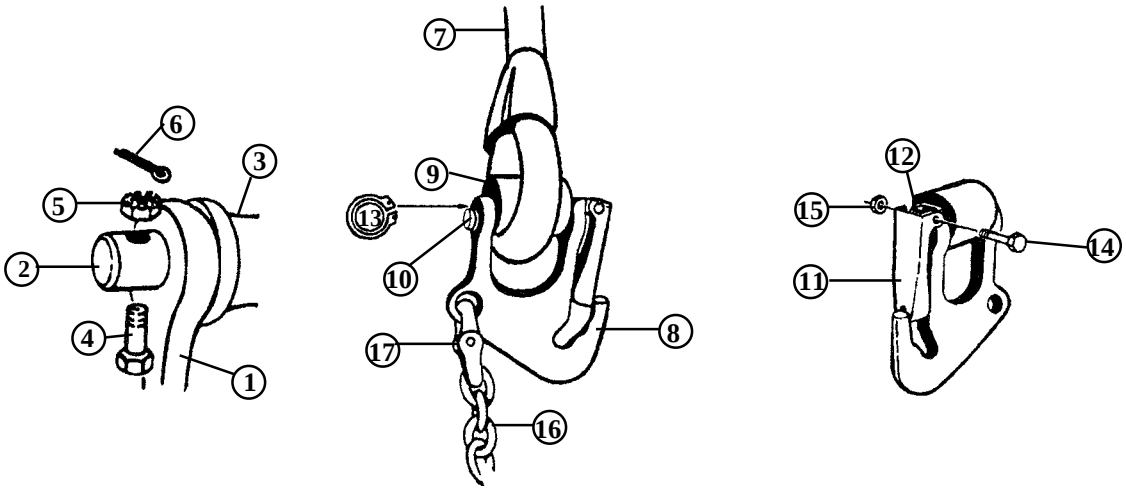

10,000- or 25,000-Pound Capacity Sling Set (Circled Numbers Correspond with NSNs of Identified Part)

	NSN	PART NUMBER	DESCRIPTION	Qty
	1670-01-027-2902	38850-00001-043	Sling Set Assembly Complete LIN T79003	1 ea
1	4030-01-048-4045	38850-00004-045	Apex Fitting Assembly	1 ea
2	5315-01-115-3482	38850-00008-101	Pin, Apex Fitting	1 ea
3	5365-01-235-0908	38850-00015-104	Spacer, Apex	1 ea
4	5306-00-944-1536	NAS1306-16D	Bolt	1 ea
5	5310-00-207-9274	AN 320C6	Nut, Castellated	1 ea
6	5315-00-234-1864	MS 24665-302	Cotter Pin	1 ea
7	4020-01-047-6814	38850-00009-055	Rope Assembly, Black	4 ea
8	4030-01-048-4046	38850-00011-041	Grabhook Assembly	4 ea
9	5365-01-109-2543	38850-00015-101	Spacer, Grabhook	4 ea
10	5315-01-121-0497	38850-00008-103	Pin, Spacer	4 ea
11	4030-01-100-1684	38850-00017-101	Keeper, Grabhook	4 ea
12	5360-01-115-6833	38850-00019-101	Keeper, Spring	4 ea
13	5365-01-046-3670	MS 3217-1050	Snap Ring	4 ea
14	5306-00-771-7621	NAS 1303-21	Bolt, Shear	4 ea
15	5310-00-807-1467	MS 21042-3	Nut, Lock	4 ea
16	4010-01-058-4772	38850-00053-101	Chain, 8-foot length	4 ea
17	4010-01-193-9331	577-0615	Link, Coupling	4 ea
18	8460-00-606-8366	Mil-K-41835	Kit Bag, Flyer's	1ea

25,000-POUND CAPACITY SLING SET AND COMPONENTS

	NSN	PART NUMBER	DESCRIPTION	Qty
	1670-01-027-29020	38850-00001-044	Sling Set Assembly Complete LIN T790039	1 ea
1	4030-01-048-4044	38850-00004-046	Apex Fitting Assembly	1 ea
2	5315-01-119-9065	38850-00008-102	Pin, Apex Fitting	1 ea
3	1670-01-235-0907	38850-00015-105	Spacer, Apex	1 ea
4	5306-00-944-2659	NAS1306-22D	Bolt	1 ea
5	5310-00-207-9274	AN 320C6	Nut, Castellated	1 ea
6	5315-00-234-1864	MS 24665-302	Cotter Pin	1 ea
7	1670-01-047-6815	38850-00009-056	Rope Assembly	4 ea
8	4030-01-048-4047	38850-00011-046	Grabhook Assembly	4 ea
9	1670-010-109-2544	38850-00015-102	Spacer, Grabhook	4 ea
10	5315-01-121-2874	38850-00008-104	Pin, Spacer	4 ea
11	4030-01-100-1685	38850-00017-102	Latch, Safety Hook	4 ea
12	5360-01-115-6833	38850-00019-101	Keeper, Spring	4 ea
13	5365-00-261-3918	MS 3217-1075	Snap Ring	4 ea
14	5306-00-771-7621	NAS 1303-21	Bolt, Shear	4 ea
15	5310-00-807-1467	MS 21042-3	Expanded Washer	4 ea
16	4010-01-058-4771	38850-00053-102	Chain, 8-foot length	4 ea
17	4010-01-041-9751	664241	Link, Coupling	4 ea
18	8460-00-606-8366	Mil-K-41835	Kit Bag, Flyer's	1ea

15,000-POUND CAPACITY MULTILEG SLING ASSEMBLY

NSN	PART NUMBER	DESCRIPTION	Qty
1670-001-902-3080	3900061	Sling multi-leg assembly, LIN T780571 TAMCN B2030	1 ea
5365-00-946-8719	AC6000292	Web ring assembly	1 ea
1670-00-719-6243	MS24553-1	Link assembly, web ring	1 ea
1670-00-946-8631	3110167	Sling leg assembly	4 ea
NA	3910112-5	Keeper, 5-inch, leg assembly	4 ea
NA	391011-1	Keeper, 6 1/4-inch, leg assembly	4 ea
1670-00-719-6343	MS 24553-1	Link assembly, sling leg	4 ea
NA	31610	Grab link	4 ea
NA	FE7623-3	Keeper, grab link	4 ea
NA	34012-18	Spring, keeper, grab link	4 ea
5310-00-167-0818	NAS1145f0363f	Washer keeper, grab link	4 ea
5315-00-812-3765	MS20392-2033	Pin, keeper, grab link	4 ea
5315-00-839-2325	MS24665-132	Cotter pin, keeper, grab link	4 ea
NA	31611	Coupling link	4 ea
NA	34080-4	Chain	4 ea

40,000-POUND CAPACITY SLING SET AND COMPONENTS

NSN	PART NUMBER	DESCRIPTION	Qty
3940-01-183-2118	TAMCN B2035	Sling set assembly, complete	1 ea
4030-01-199-9562	FE8109-1	Apex shackle assembly	1 ea
NA	FE8109-5	Shackle	1 ea
NA	FE8109-3	Pin, shackle,apex	1 ea
NA	FE8109-2	Spacer, shackle, apex	1 ea
5306-00-763-7931	NAS1306-21D	Bolt, shear	1 ea
5310-00-176-8110	AN320-6	Nut, castellated, plain, hex	1 ea
5315-00-234-1864	MS24665-302	Cotter pin	1 ea
3940-01-194-9364	JETSWMC-2000	Sling leg	4 ea
4030-01-197-1629	FE8103-1	Shackle assembly	4 ea
NA	FE8103-4	Spacer, grab link	4 ea
5306-00-151-1482	AN12-42	Bolt, grab link	4 ea
5310-00-167-1292	AN310-12	Nut, plain, castellated, plain, hex	4 ea
5315-00-285-7161	MS20392-2033	Pin, cotter	4 ea
NA	34012-18	Spring, keeper, grab link	4 ea
5310-00-167-0818	AN960-10	Washer, keeper, grab link	4 ea
5315-00-839-2325	MS24665-132	Cotter pin keeper, grab link	4 ea
4010-01-081-5114	577-0815	Coupling link	4 ea
NA	607050	Chain, 8-foot	4 ea

FLAT WEB NYLON SLINGS

TYPE X NYLON AERIAL DELIVERY SLING

NSN	Description
3940-00-675-5001	Sling, endless donut, 10-inch
1670-00-393-0460	Ring assembly, 25,000-pound capacity

TYPE XXVI NYLON MULTILOOP LINE

NSN	Description
1670-01-062-6301	2-loop, 3 foot
1670-01-062-6306	4-loop, 3 foot
1670-01-062-6304	2-loop, 9 foot
1670-01-062-6305	4-loop, 9 foot
1670-01-063-7760	2-loop, 11 foot
1670-01-062-6310	4-loop, 11 foot
1670-01-062-6303	2-loop, 12 foot
1670-01-062-6307	4-loop, 12 foot
1670-01-063-7761	2-loop, 16 foot
1670-01-062-6308	4-loop, 16 foot
1670-01-062-6302	2-loop, 20 foot
1670-01-064-4453	4-loop, 20 foot
1670-01-062-6309	4-loop, 28 foot
1670-01-062-6313	3-loop, 60 foot
1670-01-064-4454	6-loop, 60 foot
1670-01-062-6311	2-loop, 120 foot
1670-01-062-6312	6-loop, 120 foot
1670-01-107-7651	3-loop, 140 foot

ROUNDSLINGS

NSN	CAPACITY	LENGTH
1670-01-388-6789	5,300-pound	8 foot
1670-01-388-8480	8,400-pound	8 foot
1670-01-388-3845	5,300-pound	17 foot
1670-01-388-8479	8,400-pound	17 foot
1670-01-388-3917	13,200-pound	30 foot
1670-01-388-3901	21,200-pound	65 foot
1670-01-388-3965	21,200-pound	70 foot

5,000- AND 10.000-POUND CAPACITY CARGO NETS AND COMPONENTS

NSN	Part Number	Description	Qty
1670-01-058-3811	6018-5	Net, 5,000-pound capacity, LIN N02776, TAMCN J3121	1 ea
1670-01-058-3810	6018-10	Net, 10,000-pound capacity, LIN N02708, TAMCN J3120	1 ea
1670-01-070-5276	6019	Apex fitting	1 ea
1670-01-067-9989	6020	Hook	4 ea
4020-01-118-5826	M7515-7N	Repair cord, used on part no. 6018-5	As req
4020-01-119-5994	6018-20	Repair cord, used on part no. 6018-10	As req
8030-01-152-2286	WB460-23	Antiabrasion compound, olive drab	As req
8030-01-154-2327	WB460-7012	Antiabrasion compound, black	As req
1080-00-108-1155	13226EO964-2	Transportease	1 ea*
8460-00-606-8366	MIL-K-41835	Kit bag, flyers	1 ea*

* Alternate NSN is 1080-00-107-8580. These cases are designed and marked for use with the camouflage screen. Camouflage system markings should be replaced with “Helicopter External Cargo Net, 10,000-pound capacity.”

PROTECTIVE EQUIPMENT

NSN	Description
4240-00-052-3776	Eye goggles
8415-01-158-9445	Gloves, electrical workers, size 9
8415-01-158-9446	Gloves, electrical workers, size 10
8415-01-158-9447	Gloves, electrical workers, size 11
8415-01-158-9448	Gloves, electrical workers, size 12
8415-00-268-7859	Gloves, leather
4240-00-759-3290	Headset (USAF)
4240-00-762-2582	Headset (USAF)
8415-00-071-8786	Helmet, flight deck (USN/USMC/USAF)
6515-00-137-6345	Plugs, ear, hearing protection

MISCELLANEOUS EQUIPMENT AND MATERIAL

NSN	Description
4030-00-360-0304	Clevis assembly, small, MS 70087-1
5305-00-726-2553	Bolt, Screw Cap, Hexagon Head
5310-00-835-2037	Nut, Plain, Hexagon
4030-00-678-8562	Clevis assembly, medium, MS 70087-2, Shackle
5305-00-940-8069	Bolt, Screw Cap, Hexagon Head
5310-00-842-1190	Nut, Plain, Hexagon
4030-00-090-5354	Clevis assembly, large, MS 70087-3, Shackle
5305-00-177-5617	Bolt, Screw Cap, Hexagon Head
5310-00-891-3428	Nut, Plain, Hexagon
4020-00-240-2146	Cord, nylon, Type III, 550-pound breaking strength
8305-00-958-3685	Felt sheeting, 1/2-inch thick, 30-inch wide
8305-00-191-1101	Felt sheeting, 1/2-inch thick, 60-inch wide
7510-00-079-0286	Ink, marking, parachute, orange-yellow, marker
7520-00-634-6583	Ink, marking, parachute, orange-yellow, liquid
7510-00-230-2734	Ink, marking, parachute, strata-blue, marker
7520-00-286-5362	Ink, marking, parachute, strata-blue, liquid
5825-00-917-3738	Light, beacon, beanbag
6260-01-074-4230	Light, chemical wand, 30-minute glow time, Yellow
6260-00-106-7478	Light, chemical wand, 6-hour glow time, Green
6260-01-074-4229	Light, chemical wand, 12-hour glow time, Green
1670-00-783-5988	Link assembly, Type IV
1670-00-212-1149	Rachet, Adjustable, Assembly, Tiedown
1670-00-516-8405	Tiedown, Cargo, Aircraft, 10,000-pound capacity
1670-00-753-3928	Pad, energy-dissipating, honeycomb
8135-00-664-6958	Padding, cellulose, 20-inch by 60-foot
8135-00-808-6446	Padding, cellulose, 24-inch by 125-foot
8345-00-174-6865	Panel, marker, red-yellow, VS-17, orange
4020-00-231-2581	Rope, 3/8-inch, TR605, Natural
4020-00-968-1357	Rope, fibrous, 1/2-inch, MIL-R-17343
6850-00-264-9038	Solvent, dry cleaning, PD-680
7510-00-266-5016	Tape, adhesive, pressure-sensitive, 2-inch wide roll, green

MISCELLANEOUS EQUIPMENT AND MATERIAL (CONTINUED)

7510-00-074-4969	Tape, adhesive, pressure-sensitive, 2-inch wide roll, red
1670-00-725-1437	Tie-down strap, CGU-l/B, 5,000-pound capacity
5340-01-204-3009	Tie-down strap, web nylon, 5,000-pound capacity
1670-00-937-0271	Tie-down strap, web nylon, 10,000-pound capacity
5365-00-937-0147	D-Ring, aerial delivery
3990-00-937-0272	Load binder assembly
1670-00-986-1139	Quick-fit strap fastener

Two-point link assembly components:

5306-00-435-8994	Bolt, 1-inch diameter, 4-inch long (2 each)
5310-00-232-5165	Nut, 1-inch diameter (2 each)
1670-00-003-1954	Plate, side, 5 1/2-inch long (2 each)
5365-00-007-3414	Spacer, large
1670-00-574-8044	Wand, static discharge
5920-01-192-5535	Wand, static discharge, 3-foot, PN 1610AS100-1, TAMCN C6254
5920-01-347-0728	Wand, static discharge, 5-foot, PN 1610AS100-2, TAMCN C6252
8305-00-082-5752	Webbing, nylon, tubular, 1/2-inch, 1,000-pound breaking strength
8305-00-268-2411	Webbing, cotton, 1/4-inch, 80-pound breaking strength

EXTERNAL LIFT DEVICES

1670-00-587-3421	Bag, cargo, A-22, LIN B 14181, TAMCN C4070
3940-00-892-4380	Cargo net, 14-foot square, 10-inch mesh
3940-00-892-4374	Cargo net, 14-foot square, 8-inch mesh
1450-01-219-4360	Mk105 pendant
1450-00-414-7172	Mk105 hoisting sling assembly, 6,000-pound capacity
4020-00-881-8736	Mk105 sling leg assembly
4020-01-365-3115	Pendant, reach, 11,000-pound capacity
4020-01-337-3185	Pendant, reach, 25,000-pound capacity
1670-01-003-0803	Releasable swivel hook pendant sling AC6000500 Mod 1
1450-00-169-6927	Sling, pallet, Mk86, LIN S80670
1398-00-004-9175	Sling, pallet, Mk100, LIN S80738
1670-00-103-6617	Swivel hook sling leg, AC6000153 (USMC, USN)

APPENDIX B

SLING CONVERSION CHARTS

10,000-POUND SLING SET CHAIN LINK NUMBER	25,000-POUND SLING SET CHAIN LINK NUMBER	40,000-POUND SLING SET CHAIN LINK NUMBER	15,000-POUND MULTILEG SLING SET CHAIN LINK NUMBER
	3		51
	4		52
3	5		53
4	6		54
5	6		54
6	7	3	55
7	8	4	56
8	9	4	57
9	9	5	57
10	10	6	58
11	11	6	59
12	11	7	59
13	12	7	60
14	13	8	61
15	14	9	62
16	14	9	62
17	15	10	NO FURTHER CONVERSIONS FOR 15,000-POUND MULTILEG SLING SET
18	16	11	
19	16	11	
20	17	12	
21	18	13	
22	19	13	
23	19	14	
24	20	15	
25	21	15	
26	21	16	
27	22	16	
28	23	17	
29	24	18	
30	24	28	
31	25	19	
32	26	20	
33	27	20	
34	27	21	

SLING CONVERSION CHARTS (CONTINUED)

10,000-POUND SLING SET CHAIN LINK NUMBER	25,000-POUND SLING SET CHAIN LINK NUMBER	40,000-POUND SLING SET CHAIN LINK NUMBER	15,000-POUND MULTILEG SLING SET CHAIN LINK NUMBER
35	28	21	NO FURTHER CONVERSIONS FOR 15,000-POUND MULTILEG SLING SET
36	29	22	
37	30	22	
38	31	23	
39	31	24	
40	32	24	
41	33	25	
42	34	25	
43	34	26	
44	35	26	
45	36	27	
46	37	28	
47	38	28	
48	39	29	
49	39	29	
50	40	30	
51	41	30	
52	42	31	
53	43	32	
54	44	32	
55	45	33	
56	45	33	
57	46	34	
58	47	34	
59	48	35	
60	49	36	
61	50	36	
62	50	37	
63	51	37	
64	52	38	
65	53	38	
66	54	39	
67	54	40	
68	55	40	
69	56	41	
70	57	41	

SLING CONVERSION CHARTS (CONTINUED)

10,000-POUND SLING SET CHAIN LINK NUMBER	25,000-POUND SLING SET CHAIN LINK NUMBER	40,000-POUND SLING SET CHAIN LINK NUMBER	15,000-POUND MULTILEG SLING SET CHAIN LINK NUMBER
71	57	42	NO FURTHER CONVERSIONS FOR 15,000-POUND MULTILEG SLING SET
72	58	42	
73	59	43	
74	60	44	
75	61	44	
76	61	45	
77	62	46	
78	63	46	
79	64	47	
80	65	48	
81	65	48	
82	66	49	
83	67	49	
84	68	50	
85	68	51	
86	69	51	
87	70	52	
88	71	53	
89	72	53	
90	72	54	
91	73	55	
92	74	55	
93	75	56	
94	76	57	
95	76	57	
96	77	58	
97	78	58	
98	79	59	
99	79	60	
100	80	60	
101	81	61	
102	82	62	
103	83	62	
104	83	63	
105	84	64	
106		64	
107		65	

GLOSSARY

ACRONYMS AND ABBREVIATIONS

ACP	assault command post
AETC	auxiliary equipment transportation container
AFATADS	advanced field artillery tactical data systems
ARL-C	airborne reconnaissance low-comint
ARL-I	airborne reconnaissance low-imagery
AS	aviation section
ASK	acoustic suppression kit
ATG	antenna transceiver group
BCP	battery command post
bn	battalion
BSTF	base shop test facility
CAFSM	compressed air-foam system, mobile
CBC	cargo bed cover
CHIPS	commom hardware intelligence processing subsystem
CMTH	contact maintenance truck, heavy
CNCE	communications nodal control element
CONEX	container express
COPS	crash-out package system
CS	containerized shower
DASC	direct air support central
DAMP	digital antenna mast program
DGM	digital group multiplexer
DOD	Department of Defense
DPPC	deployable print production center
DTSS-L	digital topographic support system-light
EALP	enclosure assembly launch pods
EBFL	extendable boom forklift
ECU	environmental control unit
EFOGM	enhanced fiber optic guided missile
ELAMS	expandable light airmobile shelter
EMI	electromechanical induction
EPLRS	enhanced position location reporting system
FAAR	forward area alerting radar
FME	field maintenance equipment
FOPS	falling objects protection system
FUPP	full-up power pack
GMLA	guided missile launch assembly
GPH	gallons per hour
GPM	gallons per minute
GVW	gross vehicle weight
HEMAT	heavy expanded mobility ammunition trailer
HGAG	high gain antenna group
H-HMMWV	heavy high-mobility multipurpose wheeled vehicle
HIPIR	high-power illuminator radar
HMD	high mobility downsized
HMDA	high mobility digital group multiplexer assemblage
HMMH	high mobility materiel handler
HMMWV	high-mobility multipurpose wheeled vehicle
HMT	high mobility trailers
HZ	hertz
IAS	intelligence analysis system
IEW	intelligence and electronic warfare
IFAV	interim fast attack vehicle
IMETS	integrated meteorological systems
IPDS	inland petroleum distribution system
JRSC	jam-resistant secure communications
JSTAR	joint surveillance target attack radar
JTIDS	joint tactical information distribution system
KW	kilowatt(s)
LAV	light armored vehicle
lbs	pounds
LIN	line number
LMS	lightweight multipurpose shelter
LMTV	light medium tactical vehicle
LTACFIRE	lightweight tactical fire control system
LVAD	low velocity airdrop
MANPADS	man portable air defense system
MASINT	measurement and signal intelligence
MDS	meteorological data system
MGB	medium girder bridge
MHG	meteorological hydrogen generator
MIL STD	military standard
MLRS	multiple launch rocket system
mm	millimeter
MR	mobile radio
MRBS	mobile radio broadcasting subsystem
MSFDCS	multiservice flight data collection sheet
MT	mobile television
MTBS	mobile television broadcasting subsystem
MTMCTEA	Military Traffic Management Command Transportation Engineering Agency
MTV	medium tactical vehicle
NABS	NATO airbase satcom
NATO	North Atlantic Treaty Organization
NAVAIR	Naval Air Systems Command
NCS-E(D)	downsized net control station
NSN	national stock number
NSWRIB	Naval Special Warfare Rigid Inflatable Boat
OC	operations central
OCG	operational control group

PCP	platoon command post
PEELS	primary electrical equipment life support
PLS	palletized loading system
PN	part number
POC	platoon operations center
PPU	primary power unit
PSV/MC	platoon support van/maintenance center
PTO	pioneer tool outfit
QRSA	quick reaction satellite antenna
RAC	riverine assault craft
RIE	required individual equipment
RLST	remote landing site tower
ROPS	roll-over protection system
ROWPU	reverse osmosis water purification unit
RP/C	rocket pod/container
SCINS	satellite communications intelsat nodal subsystem
SE	shop equipment
SEE	small emplacement excavator
SICPS	standardized integrated command post systems
SIU	sensor interface unit
SIXCON	six-compartment container
SMART-T	secure mobile anti-jam radar tactical terminal
SMMS	sensor mobile monitoring system
SOMS	special operations media systems
SSC	US Army Soldier Systems Center
SSS	single shelter switch
TAMCN	Table of Authorized Material Control Number
TAOM	tactical air operations module
TATERS	trojan air transportable electronic reconaissance system
TERPES	tactical reconnaissance processing evaluation system
TM	technical manual
TMS	tactical messaging system
TOTS	temporary occupancy troop shelter
TOW	tube launched, optically tracked, wireguided
TQG	tactical quiet generator
TRSS	tactical remote sensor system
TSS	tracked suspension system
TTCS	tactical terminal control system
TTMS	trojan transportable miniswitch
US	United States
USA	United States Army
USMC	United States Marine Corps
W/WO	with/without

REFERENCES

REQUIRED PUBLICATIONS

Required publications are sources that users must read in order to understand or to comply with this publication.

MULTISERVICE PUBLICATION

AFJMAN 24-204/TM 38-250/NAVSUP PUB 505/MCO P 4030.19F/DLAM 4145.3, Packaging and Materials Handling: Preparing Hazardous Materials for Military Air Shipment. November 1994.

FM 10-450-3/MCRP4-23E, Vol I/NWP 3-04.11/AFJMAN 11-223, VOL I/COMDTINST M13482.2A
Multiservice Helicopter Sling Load: Basic Operations and Equipment. April 1997.

FM 10-450-4/MCRP4-23E,VOL II/NWP 3-04.12/AFJMAN 11-223, VOL II/COMDTINST M13482.3A
Multiservice Helicopter Sling Load: Single-Point Load Rigging Procedures. May 1998.

MIL STD 913 - Requirements for the Certification of Sling Loaded Equipment for External Transportation by Department of Defense Helicopters. February 1997.

TM 9-1425-2585-10-1 - System Description of M48A2 (Chaparral Air Defense Guided Missile System). June 1984.

TM 9-3990-206-14&P - Operator's, Unit, Direct Support and General Support Maintenance Manual (Including Repair Parts and Special Tools List) for Palletized Load System (PLS) Flatrack Model M1077. March 1994.

FM 10-450-5
MCRP 4-23E, VOL III
NWP 3-04.13
AFJMAN 11-223, VOL III
COMDTINST M13482.4A
30 AUGUST 1999

By Order of the Secretary of the Army:

ERIC K. SHINSEKI
General, United States Army
Chief of Staff

Official:

JOEL B. HUDSON
Administrative Assistant to the
Secretary of the Army
9916607

DISTRIBUTION:

Active Army, Army National Guard, and U. S. Army Reserve: To be distributed in accordance with the initial distribution number 114649, requirements for FM 10-450-5.