U.S. Department of Homeland Security
United States Coast Guard

Commandant
United States Coast Guard

US Coast Guard Stop 7501
2703 Martin Luther King Jr. Ave SE
Washington, DC 20593-7501
Staff Symbol: CG-CVC
Phone: (202) 372-1224

COMDTCHANGENOTE 16000
25 JUN 2014

COMMANDANT CHANGE NOTICE 16000

Subj: CH-1 TO THE MARINE SAFETY MANUAL VOLUME II, COMDTINST M16000.7B

1. PURPOSE. This Commandant Change Notice publishes a change to The Marine Safety Manual Volume II, COMDTINST M16000.7B.

2. ACTION. All Coast Guard unit commanders, commanding officers, officers-in-charge, deputy/assistant commandants, and chiefs of headquarters staff elements shall comply with the provisions of this Commandant Change Notice. Internet release is authorized.

3. DIRECTIVES AFFECTED. With the addition of this Commandant Change Notice, The Marine Safety Manual Volume II, COMDTINST M16000.7B, is updated. The following Navigation and Vessel Inspection Circulars (NVIC) are cancelled: 08-68 and 03-88 Ch. 1. The following Policy Letters are cancelled: CG-CVC Policy Letter 12-08, MOC Policy Letter Nos. 1-00, 02-01, 02-02, 03-01, 01-03, 05-03 and 02-05, CG-543 Policy Letters 10-03 and 11-06, CG-3PCV Policy Letter 07-04, and G-PCV Policy Letter 06-05.

4. DISCUSSION. This does not constitute a substantial change to the content of the previous version of this Manual. The primary reason for this change is to incorporate existing policy into the Manual to reduce the number of places Coast Guard members have to reference for guidance. Numerous non-technical changes have been made throughout the document including correcting misspellings and incorrect paragraph numbering.

5. DISCLAIMER. This guidance is not a substitute for applicable legal requirements, nor is it itself a rule. It is intended to provide operational guidance for Coast Guard personnel and is not intended to nor does it impose legally-binding requirements on any party outside the Coast Guard.

DISTRIBUTION – SDL No. 164

	a	b	c	d	e	f	g	h	i	j	k	l	m	n	o	p	q	r	s	t	u	v	w	x	y	z
A																										
B		x			x									x			x									
C												x														
D	x	x	x	x							x															
E														x												
F			x							x																
G																										
H																										

NON-STANDARD DISTRIBUTION:

6. MAJOR CHANGES.

a. CG-CVC Policy Letter 12-08, Guidance Implementing the International Convention on the Control of Harmful Anti-Fouling Systems on Ships, has been incorporated into the Manual. The guidance in the policy letter for domestic vessels can be found in section B3 on pages 43-45 and for foreign vessels in section D1 on pages 31-32.

b. CG-MOC Policy letter No. 1-00, Acceptance of the International Code of Safety for High-Speed Craft (HSC Code) as Equivalent to Meeting Title 46, Code of Federal Regulations (CFR), Subchapter H or Subchapter I, has been incorporated into the Manual. The guidance in the policy letter can be found in section B4 on pages 73-74.

c. CG-543 Policy Letter 10-03, Banning of Foreign Vessels, has been incorporated into the Manual. The guidance in the policy letter can be found in section D2 on pages 12-16.

d. CG-3PCV Policy Letter 07-04, Regulatory Interpretations For Notice of Arrival Regulation, and G-PCV Policy Letter 06-05, Regulatory Interpretation for Notice of Arrival Regulation, have been incorporated into the Manual. The guidance in these policy letters can be found in section D4 on pages 24-25.

e. CG-MOC Policy Letter 02-05, Navigation Safety Equipment Testing Required Under 33 CFR 164.25 For Cruise Ships, has been incorporated into the Manual. The guidance in the policy letter can be found in section D7 on page 6.

f. CG-MOC Policy Letter 05-03, Operator Requirements for Foreign Flagged Cruise Ships Using Lifeboats as Tenders, has been incorporated into the Manual. The guidance in the policy letter can be found in section D7 on pages 28and 34.

g. The content of Section B8, Offshore, has been incorporated into the new Section G, Outer Continental Shelf Activities. Section B8 will remain as a place holder for future additions to the MSM. Portions of NVICs 07-68, 12-69, 06-72 Ch. 1, 04-78 Ch. 1, 10-81 Ch. 1, 10-82 Ch. 1, 07-84, 03-87, 1-89, 2-89, 10-92 Ch. 2, 02-95 Ch. 2, 02-99 and 02-07 are contained within newly created Section G, Outer Continental Shelf Activities. Portions of CG-543 Policy Letters 07-02 and 10-01 are included in this section. NVICs 08-68 and 03-88 Ch. 1 are included in their entirety and hereby cancelled per paragraph 3. CG-MOC Policy Letters 02-01, 03-0, 01-03, 02-02 and CG-543 Policy Letter are included in their entirety and cancelled per paragraph 3. Details regarding the location of the cancelled policy letters and NVIC's are provided below.

h. NVIC 03-88, Ch. 1, Letters of Compliance to foreign Documented Mobile Offshore Drilling Units Operating on the Outer Continental Shelf of the United States, has been incorporated into the Manual. The guidance in the NVIC can be found in Section G, pages G3-3 through 18.

i. NVIC 08-68, Classification of Vessels as Self-propelled, has been incorporated into the Manual. The guidance in the NVIC can be found in Section A, page A6-10.

j. CG-MOC Policy Letter 03-01, Pressure Vessel internal Examination and Relief valve testing for Foreign Flag MODUs Operation on the Outer Continental Shelf, has been incorporated into the Manual. The guidance in the policy letter can be found in Section G, pages G3-12 and G3-16.

k. CG-MOC Policy Letter 02-01, Regular Complement of Crew Determinations for Units Engaged in Outer Continental Shelf (OCS) Activities, has been incorporated into the Manual. The guidance in the policy letter can be found in Section G, page G1-11.

l. CG-MOC Policy Letter 02-02, Fixed Platform Inspection Program, has been incorporated into the Manual. The guidance in the policy letter can be found in Section G, page G5-3.

m. CG-MOC Policy Letter 03-01, In-Service Inspection Program (ISIP) for Floating Facilities in the OCS, has been incorporated into the Manual. The guidance in the policy letter can be found in Section G, pages G1-12 and G4-8.

n. CG-543 Policy Letter 11-06, Risked Based Targeting of Foreign Flagged Mobile Offshore Drilling Units (MODUs), has been incorporated into the Manual. The guidance in the policy letter can be found in Section G, pages G3-22 through 31.

o. Other guidance to the field that has been sent through monthly message traffic has been incorporated into the appropriate sections of the Manual. Due to the numerous changes and the shifting down of pages, Section D Chapters 1 and 2 have been replaced in their entirety.

7. ENVIRONMENTAL ASPECT AND IMPACT CONSIDERATIONS.

a. The development of this Commandant Change Notice and the general policies contained within it have been thoroughly reviewed by the originating office in conjunction with the Office of Environmental Management, and are categorically excluded (CE) under current USCG CE # 33 from further environmental analysis, in accordance with Section 2.B.2. and Figure 2-1 of the National Environmental Policy Act Implementing Procedures and Policy for Considering Environmental Impacts, COMDTINST M16475.1 (series). Because this Commandant Change Notice contains guidance on, and provisions for, compliance with applicable environmental mandates, Coast Guard categorical exclusion #33 is appropriate.

b. This directive will not have any of the following: significant cumulative impacts on the human environment; substantial controversy or substantial change to existing environmental conditions; or inconsistencies with any Federal, State, or local laws or administrative determinations relating to the environment. All future specific actions resulting from the general policies in this Commandant Change Notice must be individually evaluated for compliance with the National Environmental Policy Act (NEPA), DHS and Coast Guard NEPA policy, and compliance with all other environmental mandates. Due to the administrative and procedural nature of this Commandant Change Notice, and the environmental guidance provided within it for compliance with all applicable environmental laws prior to promulgating any directive, all applicable environmental considerations are addressed appropriately in this Commandant Change Notice.

8. DISTRIBUTION. No paper distribution will be made of this Change Notice. An electronic version will be located on the following Commandant (CG-612) web sites. Internet: http://www.uscg.mil/directives/, and CGPortal: https://cgportal2.uscg.mil/library/directives/sitepages/home.aspx.

9. PROCEDURE. Remove and replace the following sections of The Marine Safety Manual Volume II, COMDTINST M16000.7B:

Remove	Replace
Page A2-7 – A2-17	Page A2-7 – A2-17
Page A3-3 – A3-29	Page A3-3 – A3-29
	Page B3-43 – B3-45
Page B4-73 – B4-86	Page B4-73 – B4-88
Page D1-1 – D1-48	Page D1-1 – D1-53
Page D2-1 – D2-22	Page D2-1 – D2-27
	Page D3-6
Page D4-18- D4-24	Page D4-18 – D4-24
Page D6-17 – D6-36	Page D6-17 – D6-37
Page D7-18	Page D7-18
Page D7-20	Page D7-20
Page B8-1 – 41	Section G (Chapters 1-6)

10. RECORDS MANAGEMENT CONSIDERATIONS. This Commandant Change Notice has been thoroughly reviewed during the directives clearing process, and it has been determined that there are records scheduling requirements, in accordance with Federal Records Act, 44 U.S.C. 3101 et seq., NARA requirements, and Information and Life Cycle Management Manual, COMDTINST M5212.12 (series). This policy has significant or substantial change to existing records management requirements, or inconsistencies with existing determinations relating to documentation requirements.

11. FORMS/REPORTS. The forms called for in this Manual are available in USCG Electronic Forms on the Standard Workstation or on the Internet: http://www.uscg.mil/forms/; CGPortal at https://cgportal.uscg.mil/delivery/Satellite/uscg/References; and Intranet at http://cgweb.comdt.uscg.mil/CGForms.

12 REQUEST FOR CHANGES. Request for changes to the Marine Safety Manual Volume II, COMDTINST M16000.7B may be sent to Commandant (CG-CVC-1) at (202) 372-1224 or CG-CVC-1@uscg.mil.

P. F. THOMAS /s/
Rear Admiral, U.S. Coast Guard
Assistant Commandant for Prevention Policy

USCG Marine Safety Manual, Vol. II: Materiel Inspection

TABLE OF CONTENTS

A. Marine Inspection Administration **A1-1**

1. Authority and Provisions for Merchant Vessel Inspections. A1-1
2. Administration of Merchant Vessel Inspections A2-1
3. Documentation of Vessel Inspections A3-1
4. Approval of Plans and Specifications A4-1
5. Vessel Construction, Conversions, Alterations, and Repairs A5-1
6. Miscellaneous Vessel Inspection Activities A6-1

B. Domestic Inspection Programs **B1-1**

1. Inspection of Vessels for Certification B1-1
2. Vessel Reinspections, Annual Inspections, and Periodic Inspections B2-2
3. Hull Examinations B3-1
4. Inspection Procedures Applicable to Vessel Types, Classes, and Categories B4-1
5. Inspection of Public Vessels B5-1
6. Pollution Prevention B6-1
7. Marine Facilities and Structure B7-1
8. (Chapter held for future update) B8-1
9. Alternate Compliance Program B9-1
10. The Streamlines Inspection Program (SIP) B10-1

C. Inspection of Engineering Systems, Equipment, and Materials **C1-1**

1. Marine Equipment and Materials C1-1
2. Inspections of Vessel Equipment and Materials C2-1
3. Factory and Shop Inspections of Equipment and Materials C3-1
4. Inspection of Steering Systems C4-1
5. Inspection of Inert Gas Systems C5-1

D. Port State Control **D1-1**

1. General Aspects of Port State Control Examinations D1-1
2. Procedures Applicable to Exercising Control Over Foreign Vessels Under U.S. Jurisdiction D2-1
3. Procedures to Ensure Accountability for Port State Control Examinations and Detentions D3-1
4. Targeting of Foreign Vessels D4-1
5. Procedures Applicable to Foreign Freight Vessels D5-1
6. Procedures Applicable to Foreign Tank Vessels D6-1
7. Procedures Applicable to Foreign Passenger VesselsB6 – 14 D7-1

E. International Conventions, Treaties, Standards, and Regulations **E1-1**

1. MARPOL 73/78 Vessel Requirements E1-1
2. Inspections Relative to SOLAS Requirements E2-1
3. Safety Management Ststems (SMS) E3-1
4. International Convention on Load Lines, 66/88 E4-1

TABLE OF CONTENTS

F. Carriage of Hazardous Materials **F1-1**
1. Hazardous Materials Safety F1-1
2. Carriage of Combustible and Flammable Cargo F2-1
3. Carriage of Bulk Liquid Chemicals F3-1
4. Carriage of Bulk Liquid Gases F4-1
5. Other Hazardous Materials Concerns F5-1

G. Outer Continental Shelf Activities **G1-1**
1. Regulations, Policy and Guidance for a Unit Conducting OCS Activity G1-1
2. Procedures Applicable to MODUs (U.S.) G2-1
3. Procedures Applicable to MODUs (Foreign) G3-1
4. Procedures Applicable to Floating OCS Facilities G4-1
5. Procedures Applicable to Fixed Offshore Facilities to Platforms G5-1
6. Procedures Applicable to Other Vsls Engaged in OCS Activities G6-1

CHAPTER 1: AUTHORITY AND PROVISIONS FOR MERCHANT VESSEL INSPECTIONS

A. AUTHORITY FOR THE INSPECTION OF VESSELS

1. General

The Coast Guard administers navigation and vessel inspection laws and regulations governing marine safety. It is the Coast Guard's responsibility to inspect the vessels regulated by those laws. Each marine safety unit must maintain current copies of Titles 33 and 46 of the Code of Federal Regulations (CFR). A statute's applicability to a particular vessel is based on many factors, including the vessel's trade, route, length, tonnage, and/or number of passengers. To avoid misunderstandings, the applicability of each statute should be determined with a particular vessel, type of vessel, or operation in mind. Most statutes establish general requirements for inspection and authorize the Coast Guard to prescribe specific standards by regulation. However, certain statutes contain specific requirements for vessel standards and procedures.

2. Authority

46 U.S.C. 3305, 3307, and 3714 provide the legal basis for Coast Guard inspection of vessels that are subject to inspection under 46 U.S.C. 3301. 43 U.S.C. 1356 provides the legal basis for Coast Guard regulations pertaining to vessels engaged in Outer Continental Shelf activities. 46 U.S.C. 3306 and 3703 direct the Secretary of the Department of Homeland Security (DHS) to prescribe regulations to carry out these requirements.

3. Delegation of Authority from SECDHS

DHS has delegated authority to the Commandant of the U.S. Coast Guard to administer certain navigation and inspection laws. The Commandant accomplishes this by prescribing regulations published in Titles 33, 46 and 49 of the CFR. These regulations incorporate international laws to which the United States is signatory (see Part D of this Chapter), as well as various classification society and industry technical standards. Specific authorities and the process by which regulations are adopted, changed, and deleted are described in 33 CFR 1.05 and in the Marine Safety Manual (MSM) Volume I, Administration and Management, COMDTINST M16000.6 (series), Chapter 2.

4. Responsibility of the Officer-In-Charge, Marine Inspection (OCMI)

Under 33 CFR 1.01-20, the Officer in Charge, Marine Inspection (OCMI) has the final authority and responsibility for carrying out vessel inspection functions within the OCMI's zone. Signature authority for certain inspection documents may be redelegated pursuant to 46 CFR 2.01-30. (See MSM, Volume I, Administration and Management, COMDTINST M16000.6 (series), Chapter 2, Paragraph 2.I.2.a.(2).) The flow of functional authority from the Commandant to the OCMI and the OCMI to subordinates is described in 46 CFR 1.01-10 and 1.01-15. Descriptions of the duties and responsibilities of the OCMI and other Marine Inspection (MI) Program personnel are presented in MSM Volume I, Administration and Management, COMDTINST M16000.6 (series).

---

5. Handling Violations of Other Laws

It is essential that all inspection personnel have a working knowledge of the laws under which they are operating. Certain laws concerning the safety of vessels are administered by other agencies, e.g., the U.S. Customs Service (Jones Act), the Federal Communications Commission, the Occupational Safety and Health Administration, the Bureau of Safety and Environmental Enforcement and the Department of Labor. When a vessel is known to be in violation of laws administered by agencies other than the Coast Guard, the agency having jurisdiction should be notified of the circumstances. In some instances, the Coast Guard and another agency will sign a Memorandum of Understanding (MOU). A MOU prescribes specific procedures to be followed to ensure that inspection and enforcement activities of each agency are complimentary to each agency. See MSM Volume X, Interagency Agreements and Acronyms, COMDTINST M16000.15A (series), for a complete listing of all MOUs. Violations of laws administered by the Coast Guard that do not pertain to marine safety should be reported to the cognizant Coast Guard District Commander.

B. REGULATIONS AND STATUTES

---

1. Code of Federal Regulations (CFR)

The OCMI should maintain current copies of all rules and regulations affecting vessel inspections for use by inspection personnel. Current year copies of the CFR should be available for inspectors to use in performing their duties. Regulations, and the subsequent changes to them, are not effective until published in the *Federal Register*. The following is a partial list of the CFR subchapters applicable to marine safety and vessel inspection:

Title 46 CFR		
Subchapter	**Part**	**Subject**
A	1-9	Procedures Applicable to the Public
B	10-16	Merchant Marine Officers and Seamen
C	24-29	Uninspected Vessel
D	30-40	Tank Vessels
E	42-46	Load Lines
F	50-64	Marine Engineering
G	66-69	Documentation and Measurement of Vessels
H	70-89	Passenger Vessels
I	90-106	Cargo and Miscellaneous Vessels
I-A	107-109	Mobile Offshore Drilling Units
J	110-113	Electrical Engineering
K	114-122	Small Passenger Vessels Carrying More Than 150 Passengers or with Overnight Accommodations for More Than 49 Passengers
L	125-139	Offshore Supply Vessels
N	146-149	Dangerous Cargoes
O	150-155	Certain Bulk Dangerous Cargoes
Q	159-165	Equipment, Construction and Material: Specifications and Approval
R	166-169	Nautical Schools
S	170-174	Subdivision and Stability
T	175-187	Small Passenger Vessels
U	188-196	Oceanographic Research Vessels
V	197-198	Marine Occupational Safety and Health Standards
W	199	Lifesaving Appliances and Arrangements

Title 33 CFR		
Subchapter	**Part**	**Subject**
A	19	Waivers of Navigation and Vessel Inspection Laws and Regulations
D	80	Navigation Rules
H	105	North Atlantic Passenger Routes
N	140-147	Outer Continental Shelf (OCS) Activities
O	151-159	Pollution
P	160	Ports and Waterways Safety

Title 49 CFR		
Subchapter	**Part**	**Subject**
C	171-179	Hazardous Materials Regulations

2. U.S. Code (U.S.C.), Titles 33, 46, and 50

The OCMI should also maintain current copies of Titles 33, 46, and 50 U.S.C.. The following is a list of significant sections of Titles 33, 46, and 50 U.S.C. applicable to marine safety and vessel inspection:

Title 33 U.S.C.	
Citation	**Subject**
33 U.S.C. 1221-1232	Statutes for Notice of Arrival and navigation safety regulations.

Title 46 U.S.C.	
Citation	**Subject**
46 U.S.C. 5101 – 5116	Load line requirements for foreign vessels.
46 U.S.C. 2101(12), 3306(a)(5) and 49 U.S.C. 1801 -1812	Safety requirements for carriage of dangerous articles and substances aboard foreign vessels.
46 U.S.C. 2101(12), (21) and (35), 3504 and 3505	Safety requirements for foreign vessels carrying passengers from any U.S. port to any other place or country.
46 U.S.C. 2101(12), (21), (22) and (35), and Chapter 35	Inspection and certification requirements for all foreign passenger vessels which embark passengers at and carry passengers from a U.S. port. These statutes are also relevant for vessels with valid International Convention For The Safety Of Life At Sea (SOLAS) 74/78 Certificates or Canadian Certificates of Inspection that must be examined to verify compliance with the flag administration's safety verification requirements.
46 U.S.C. 2101(12) and (39), 3301(10) and Chapter 37	Safety requirements that apply, with certain stipulations, to all foreign vessels regardless of tonnage, size, or manner of propulsion, whether or not carrying freight or passengers for hire, that enter U.S. navigable waters while carrying liquid bulk cargoes that are-- a. Flammable or combustible;

Title 46 U.S.C.	
Citation	**Subject**
	b. Oil of any type or in any form, including petroleum, fuel oil, sludge, oil refuse and oil mixed with wastes, except dredged spoil; c. Designated as a hazardous substance under Section 311(b) of the Federal Water Pollution Control Act (FWPCA) (33 U.S.C. 1321); or d. Designated as hazardous materials under Section 104 of the Hazardous Materials Transportation Act (HMTA) (49 U.S.C. 1803).
46 U.S.C. 2101(21) and 3304	Permission for U.S. vessels transporting cargo to carry a limited number of individuals without being considered a "passenger vessel" for most inspection purposes, and extension of this privilege to cargo vessels of those nations that accord reciprocal treatment.
46 U.S.C. 2101(33) and 3301(7)	Directs that safety requirements of 46 U.S.C. Chapter 33 are applicable to seagoing motor vessels of 300 or more GT.
46 U.S.C. 2101(35) and 3301(8)	Safety requirements for foreign small passenger vessels carrying more than six passengers from a U.S. port.

Title 50 U.S.C.	
Citation	**Subject**
50 U.S.C. 191	Requirements for security of vessels, harbors and waterfront facilities, and provision for control of the movement of foreign vessels in U.S. waters by the local OCMI/Captain of the Port (See MSM Volume VI).

C. BOUNDARY LINE AND TERRITORIAL SEA

1. Boundary Lines

a. 46 U.S.C. 3301(6) and (7) require inspection of seagoing barges and motor vessels whose definitions in 46 U.S.C. 2101(32) and (33) rely on the use of the Boundary Line.

b. 46 U.S.C. 5102(b)(6) exempts from the load line statutes a U.S. vessel engaged in a domestic voyage that does not cross the Boundary Line, except a voyage on the Great Lakes.

c. 46 U.S.C. 8304 limits the application of the Officers Competency Certificate Convention, Geneva, 1936, to the high seas, defined as being "seaward of the Boundary Line".

d. The vessel Bridge-to-Bridge Radiotelephone Act (33 U.S.C. 1201 et. seq.) requires the carriage of radiotelephones on board certain vessels inside the Boundary Line on the navigable waters of the United States (i.e., inside the 3-mile limit).

e. 33 U.S.C. 152 limits the length of towing hawsers when operating inside the Boundary Line.

f. 46 U.S.C. 3302(d) exempts certain vessels that operate inside the Boundary Line within the waters of southeastern Alaska and the State of Washington from inspection requirements. In addition to the above, the "Commercial Fishing Industry Vessel Safety Act of 1988" (46 U.S.C. 4502(b)) requires the carriage of safety equipment by certain uninspected commercial fishing industry vessels when operating beyond the Boundary Line.

NOTE: The U.S. Boundary Lines, as specified in 46 CFR Part 7, are used to determine the applicability of the six statutes listed under 46 CFR 7.1 and summarized above.

2. U.S. Territorial Sea

a. On 28 December 1988, the President of the United States, by virtue of his foreign relations authority and consistent with international law, proclaimed a 12 nautical mile territorial sea.

(1) The proclamation did not extend the contiguous zone.

(2) The U.S. territorial sea extension applies to waters adjacent to the coasts of the Commonwealth of Puerto Rico, Guam, American Samoa, U.S. Virgin Islands, Commonwealth of the Northern Mariana Islands and any other territory or possession over which the United States exercises sovereignty.

b. Effect upon Coast Guard enforcement activities. This proclamation extended the territorial sea only for international purposes and did not alter Coast Guard law enforcement activities. The proclamation did not change existing Federal and State laws.

(1) The statutory definitions and applications of jurisdictional terms such as "territorial seas," "territorial waters," "navigable waters," and other similar terms remain unchanged unless legislation is enacted to change a specific law.

(2) For the purposes of enforcing U.S. domestic laws, the U.S. territorial sea is 3 nautical miles, the outer limit of the U.S. contiguous zone is 12 nautical miles, and the meaning of U.S. customs waters is unchanged. Accordingly, congressional action is necessary to extend the geographic application of a State or Federal law beyond 3 nautical miles.

D. INTERNATIONAL CONVENTIONS AND TREATIES RELATED TO MARINE INSPECTION TO WHICH THE U.S. IS PARTY

The International Maritime Organization (IMO) is a specialized agency of the United Nations concerned solely with maritime affairs. There are approximately 160 member nations in IMO, including the United States. IMO is responsible for international conventions, treaties, and resolutions to improve maritime safety. The organization consists of an Assembly, a Council, a Secretariat, and five specialized committees. The committee that proposes standards for steering and other technical matters is the Maritime Safety Committee, which meets twice a year. Countries that are party to international conventions and treaties are listed in MSM Volume I, Administration Management, COMDTINST M16000.6 (series), Chapter 11. For information on specific international conventions, treaties, standards, and regulations, see MSM Volume II, Materiel Inspection, COMDTINST M16000.7a (series), Section E.

1. International Convention For The Safety Of Life At Sea (SOLAS), 1974

a. The International Convention For The Safety Of Life At Sea (SOLAS), 1974, became binding upon the United States on 25 May 1980.

(1) The Convention contains standards and procedures affecting the inspection of certain passenger vessels and cargo vessels making international voyages.

(2) The 1978 Protocol to SOLAS 74, adopted by the International Conference on Tanker Safety and Pollution Prevention, modified the original Convention and became effective on 1 May 1981; together they are known as SOLAS 74/78.

b. Convention requirements. For the most part, the inspection requirements of the Convention, with the exception of radio equipment requirements, have been or are in the process of being incorporated into CFR Title 33 and 46

c. Thorough knowledge of the Convention's terms is essential to understanding the regulations. For additional guidance on this Convention, see MSM Volume II, Materiel Inspection, COMDTINST M16000.7a (series),Chapters E2, D1, and D7.

2. International Convention on Load Line (ICLL), 1966

a. General. The International Load Line Convention (ICLL) contains standards for determining loading limits for vessels, the structure of vessels, protection of openings, guard rails, freeing ports, and means of access to crew's quarters. The ILLC has been incorporated into 46 CFR Subchapter E.

(1) The ILLC requirements are administered for the Coast Guard by the American Bureau of Shipping (ABS). Other assigning authorities have not been approved by the Commandant except for uninspected fish processing vessels.

(2) The MSM Volume IV, Techincal, COMDTINST M16000.9 (series), describes the responsibilities of the OCMI and inspection personnel.

b. Vessel Load Line Amendments of 1986. A double standard has existed since 1968 when the ICLL changed to a length criterion of 79 feet while the 1935 Coastwise Loadline Act remained based on a tonnage criterion of 150 GT. On 21 October 1986, the Omnibus Reconciliation Act of 1986 (Public Law 99-509) was enacted. This included provisions to revise and consolidate laws related to load lines.

(1) The Omnibus Reconciliation Act of 1986 brought all vessels under the requirements of the International Voyage Load Line Act of 1973, except in those cases where the additional requirements would not be justified for reasons of safety. The public was given ample opportunity to address implementation of the new law as it may have impacted the provisions of existing regulations and policies. Although certain existing provisions may appear to be eliminated by the new law, many could be continued under the special exemptions provision under 46 U.S.C. 5108.

(2) The Omnibus Reconciliation Act of 1986 applied to ships 79 feet or more in length on international or domestic voyages, a change from the 150 GT criterion for domestic voyages.

(a) Since 1968, vessels of 79 feet or more in length on international voyages have been required to have a load line.

(b) New vessels which are 79 feet or more in length, under 150 GT, and on domestic voyages may be assigned a load line, but are not required to have one until the implementing regulations are promulgated.

(c) Existing vessels on domestic voyages are subject to load line requirements based on tonnage.

(3) Until the regulations are amended to conform to the new law, the existing regulations will continue in effect.

(a) Previously published policies based on the old regulations or the old law in the MSM and elsewhere will also remain in effect.

(b) Additionally, existing limited domestic voyage approvals allowed by local policy, whether or not they are currently in the regulations, may continue in effect.

(c) When the new regulations are promulgated and in effect, all vessels on domestic voyages which were built after 1 January 1986 will have to comply with the load line requirements except as specifically exempted. Any existing policies that are discontinued by the rulemaking could, under the new law, also result in certain requirements being applied retroactively to existing vessels.

(d) Questions regarding load line application and enforcement should be directed to Commandant (CG-CVC).

3. International Convention for the Prevention of Pollution from Ships, 1973 as modified by the 1978 Protocol (MARPOL 73/78)

a. General. The principal object of the International Convention for the Prevention of Pollution from Ships, 1973, as modified by the 1978 Protocol (MARPOL 73/78) is the protection of the marine environment from pollution arising from the deliberate, negligent, or accidental release of oil and other harmful substances. Most of the technical measures, including the requirements for vessels and reception facilities, are included in six annexes to this Convention, as follows:

(1) Annex I - Oil.

(2) Annex II - Noxious Liquid Substances Carried in Bulk (e.g., chemicals).

(3) Annex III - Harmful Substances Carried in Packages.

(4) Annex IV - Sewage.

(5) Annex V - Garbage.

(6) Annex VI – Air Pollution.

b. Annexes I and II. The Act to Prevent Pollution From Ships (33 U.S.C. 1901 et seq.) is the implementing U.S. legislation for MARPOL and Annexes I and II. Annex I entered into force on 2 October 1983 and Annex II entered into force on 6 April 1987.

c. Annexes III through VI. These are optional, i.e., a government may, at the time of acceding to or ratifying the Convention, declare that it does not accept any or all of these Annexes. The United States has accepted Annex V, which came into force on 31 December 1988. Annex IV is not yet in force.

---

4. International Regulations for Preventing Collisions at Sea, 1972 (COLREGS)

The International Regulations for Preventing Collisions at Sea (COLREGS) are published in COMDTINST M16672.2, Navigation Rules, International - Inland. COLREGS prescribe the basic rules that control the behavior of vessels at sea to prevent collisions. Questions concerning the navigation rules should be directed to Commandant (CG-WWM).

5. International Convention relating to Intervention on the High Seas in Cases of Oil Pollution Casualties, 1969

This Convention affirms the right of a coastal nation to take all necessary measures on the high seas to prevent or mitigate the danger to its coastline or related interest from pollution by oil, or the threat thereof, following a maritime casualty. Such actions may only be taken after due consultation with appropriate interests, including the flag state(s) of the ship(s) involved, the owners of the ship(s) or cargoes in question, and, when circumstances permit, independent experts appointed for this purpose. Marine safety personnel may not conduct such interventions without the specific approval of the Commandant. A coastal nation that exceeds these measures is liable to pay compensation for any damages caused by its unilateral actions. The Convention contains provisions for the settlement of disputes through negotiation, conciliation, and arbitration. For further guidance, consult COMDTINST M16000.14 (MSM Volume IX, Marine Environmental Protection, COMDTINST M16000.14 (series)).

---

6. International Convention for Safe Containers, 1972

This Convention seeks to maintain a high level of safety of human life in the transport and handling of cargo containers, while facilitating their international use in intermodal transportation.

---

7. Convention on the Prevention of Marine Pollution by Dumping of Wastes and Other Matter, 1972

This Convention, commonly known as the "London Dumping Convention," promotes the effective control of all sources of marine pollution. It tasks party nations to take all practical steps to prevent pollution from dumping wastes and other matter liable to create hazards to human health, to harm living resources and marine life, or to interfere with other legitimate uses of the sea. The Marine Protection, Research, and Sanctuaries Act of 1972 (MPRSA, 33 U.S.C. 1401 et seq.) was amended on 22 March 1974 to reflect the provisions of this Convention. MPRSA prohibits or controls the dumping of wastes and other matter, in whatever form or condition. The following is a summary of the key MPRSA requirements:

a. The dumping of wastes or other matter listed in Annex I of the Convention is prohibited;

b. The dumping of wastes or other matter listed in Annex II requires special prior permission; and

c. In times of emergency, usually prohibited dumping may occur to secure the safety of lives, vessels, aircraft, or structures at sea.

---

8. Officers' Competency Certificates Convention, 1936

Every nation that is party to this Convention must establish minimum requirements of professional capacity for the master, chief engineer, and navigating and engineering officers in charge of watches aboard merchant vessels of that country, and must issue certificates of competency to qualified officers. This Convention has been implemented by statute and regulation in 46 U.S.C. 8304 and 46 CFR 15.701, respectively, for vessels of 200 GT or more.

---

9. Certification of Able Seaman Convention, 1946

This Convention requires persons serving as able seamen aboard merchant vessels of nations party to this Convention to be qualified to perform any duty in the deck department, and to possess certificates of qualification granted in accordance with the provisions of the Convention.

---

10. STCW 95

The International Convention on Standards of Training, Certification and Watchkeeping for Seafarers, 1978, as amended in 1995 (STCW 95) was adopted on 07 July 1995 and entered into force internationally on 01 February 1997. The major highlights of the 1995 amendments include the following: creation of the STCW Code, changes in tonnage limitations, certification and endorsements, rest periods, requirement of English proficiency, basic safety training, vessel familiarization, and company responsibility

NOTE: See MSM Volume II, Materiel Inspection, COMDTINST M16000.7B (series), Chapter D2, for guidance on exercising control under STCW Article X, and Regulation 1(4) and NVIC 3-98 for guidance on the STCW 95.

---

11. International Labor Organization (ILO) Convention No. 147

International Labor Organization (ILO) Convention No. 147, The Convention concerning Minimum Standards in Merchant Ships (ILO 147) was adopted at the 62nd session of the International Labor Conference on 13 October 1976. It entered into force internationally on 28 November 1981; upon the United States' deposit of its instrument of ratification, it

entered into force on 15 June 1989. ILO 147 serves as an umbrella convention for 15 other ILO conventions concerning a variety of maritime related health, welfare and workplace safety issues. ILO 147 concerns three basic areas: safety standards, including standards of competency, hours of work and manning; appropriate social security matters; and shipboard conditions of employment and shipboard living arrangements. A guidebook, Inspection of Labour Conditions on Board Ship: Guidelines for Procedure (ISBN 92-2-107096-4), may be obtained from ILO Publications, The International Labour Office, CH-1211, Geneva 22, Switzerland.See MSM Volume II, Materiel Inspection, COMDTINST M16000.7B (series), Chapter D2, for guidance on exercising control under ILO 147 Article 4 and COMDTINST 16711.12.

E. PURPOSE OF MARINE SAFETY MANUAL, VOLUME II, MATERIEL INSPECTION, COMDTINST M16000.7B (SERIES)

1. Responsibility of the Marine Inspector

It is neither necessary nor possible to memorize the multitude of laws and regulations that the Coast Guard must enforce. However, it is incumbent upon, and the responsibility of, the marine inspector to have a working knowledge of both U.S. and international laws and regulations so that he/she can recognize a deficiency when one occurs and can quickly locate the statutory citation related to a particular requirement.

2. Content

The following chapters contain information and guidance intended to promote consistent interpretation and application of U.S. and international laws and regulations related to merchant vessel inspections. The regulations and the guidance contained in this volume are not intended to cover all contingencies that may be encountered during vessel inspections. This manual generally does not restate requirements that are specifically and clearly covered in the law, Federal regulations, or international conventions. There is no substitute for experience and sound judgment to ensure that good marine practice is being followed. In addition, any information in this volume may be supplemented, altered, or waived in specific cases by the Commandant, district commander, or OCMI. To that end, it is imperative that the OCMI maintain a current and complete library containing the applicable laws and regulations.

3. Other Guidance

This volume must be used in conjunction with other applicable instructions, notices, and publications such as Commandant Instructions, Law Bulletins, and Navigation and Vessel Inspection Circulars (NVICs). For easy reference, a list of recommended resources is included at the end of this chapter.

F. VESSEL INSPECTION POLICY

---

1. Inspections

The goal of vessel inspection policy is to protect individuals, their private property, and the marine environment from the consequences of incidents involving materially unsafe vessels. Generally, vessels are inspected while they are not engaged in navigation. However, at times it is more conducive to vessel owners and operators to schedule an in-water inspection, such as an inspection for certification or midperiod inspection, during a leg of a vessel's voyage. OCMIs should take advantage of underway inspections, as they allow the inspector to observe crew performance and witness the operation of a vessel's machinery and other equipment. The inspection of a vessel is intended to determine its reasonable, probable compliance with published minimum safety standards over a projected period of time. The issuance of a Certificate of Inspection (COI) attests to that reasonable probability.

---

2. Coast Guard Concerns

The Coast Guard's objective is to administer vessel inspection laws and regulations and promote safe, well-equipped vessels that are suitable for their intended service. It is not the Coast Guard's intent to place unnecessary economic and operational burdens upon the maritime industry. When determining inspection requirements and procedures, inspection personnel must recognize and give due consideration to the following factors:

a. That the burden for proposing acceptable repairs rests upon the vessel's owner, not upon the repair facility or the inspector.

b. That delays to vessels, which can be costly, need to be balanced against the risks imposed by continued operation of the vessel, with safety of life, property, and the environment always the predominant factors rather than economics.

c. That certain types of construction, equipment, and/or repairs are more economically advantageous to the vessel operator and can provide the same measure of safety.

d. That some repairs can be safely delayed and can be more economically accomplished at a different place and time.

e. That the overall safety of a vessel and its operating conditions, such as route, hours of operations, and type of operation, should be considered in determining inspection requirements.

f. That vessels are sometimes subject to the operational requirements of organizations and agencies other than the Coast Guard.

g. That a balance must be maintained between the requirements of safety and practical operation. Arbitrary decisions or actions that contribute little to the vessel's safety must be avoided.

---

3. Appeals and Waivers

Decisions made by the OCMI; the District Commander; the Marine Safety Center; a recognized classification society when acting on behalf of the Coast Guard; the National Maritime Center; Director, Great Lakes Pilotage; and vessel documentation matters may be appealed by the affected party as described in 46 CFR 1.03. Pursuant to the 2010 Coast Guard Authorization Act, Pub. L. 111-281, which amended Section 102 of Chapter 5 of Title 14, United States Code, the following section details the requirements for individuals involved in appeals and waivers:

Except for the Commandant of the Coast Guard, any individual adjudicating an appeal or waiver of a decision regarding marine safety, including inspection or manning and threats to the environment, shall—
(1) be a qualified specialist with the training, experience, and qualifications in marine safety to effectively judge the facts and circumstances involved in the appeal and make a judgment regarding the merits of the appeal; or
(2) have a senior staff member who—
(a) meets the requirements of paragraph (1);
(b) actively advises the individual adjudicating the appeal; and
(c) concurs in writing on the decision on appeal.

Efforts to resolve any disagreements should always be made first at the local level. If agreement cannot be reached with the OCMI, the affected party should submit a formal appeal in writing as indicated in 46 CFR 1.03.

G. APPLICABLE TANK VESSEL REQUIREMENTS

When a vessel carries combustible and flammable cargoes in bulk, those portions of the vessel used for the carriage of these cargoes must also meet the requirements of 46 CFR Subchapter D (tank vessels). The following portions of 46 CFR Subchapter D apply to all vessels, if the vessel carries Grade D and above products.

1. 46 CFR 32.45 Electrical Installations

Refer to 46 CFR 32.45: Electrical Installations.

2. 46 CFR 32.50 Pumps, Piping, and Hose for Cargo Handling

Refer to 46 CFR 32.50: Pumps, Piping, and Hose for Cargo Handling.

3. 46 CFR 32.55 Ventilation and Venting

Refer to 46 CFR 32.55: Ventilation and Venting.

4. 46 CFR 32.60 Hull Requirements for Tank Vessels on or After July 1, 1951

Cargo piping and pump room requirements are especially significant. Cargo piping must comply with 46 CFR 32.50-15(a)(1) and 32.50-15 (3)(b) and (c).Cargo piping must not pass through machinery spaces. Combining this with the requirements of 46 CFR 32.60-20(a) necessitates a separate space for the cargo pump. The equipment in this space must comply with 46 CFR 32.45 and 111.105-31. A hazardous area drawing in accordance with 46 CFR 110.25-1(i) is required.

H. REQUIRED PUBLICATIONS

Chapter 2 of the Directives, Publications and Reports Index (DPRI) (COMDTNOTE 5600) lists the effective publications and periodicals that marine safety units must maintain.

I. RECOMMENDED REFERENCES

In addition to the publications listed in the DPRI, OCMIs should maintain the latest editions of pertinent international conventions and standards, industry standards and technical publications deemed necessary for reference and the proper training of personnel. The OCMI should obtain sufficient numbers and varieties of these publications to keep personnel abreast of the latest developments in ship operation, construction, repair, etc. The following publications are considered good reference and training materials that should be maintained, as necessary, based on the individual needs of a unit. In light of the Coast Guard's increasing acceptance of industry developed standards, OCMIs should place special emphasis on obtaining the specific standards listed either in the regulations or below.

1. A Guide to the Non-Destructive Testing of Non-Butt Welds in Commercial Ships, Parts I and II, Ship Structure Committee (SSC).

2. A Guide to Sound Ship Structures, D'Archangelo.

3. American National Standards Institute (ANSI) Steel Pipe Flanges and Flanged Fittings, ANSI B.16.5, American Society for Testing and Materials (ASTM).

4. ANSI Standard for Steel Valves, ANSI B.16.34, ASTM.

5. ANSI Standards for Power Piping, ANSI B.31.1, ASTM.

6. Approved Welding Electrodes, Wire-Flux and Wire Gas Combinations, American Bureau of Shipping (ABS).

7. ASME Boiler and Pressure Vessel Code, The American Society of Mechanical Engineers (ASME).

8. ASTM Standards:

   i. F-1121-87(2010), International Shore Connections for Marine Applications

ii. F-1122-04(2010), Quick Disconnect Couplings

iii. F-1196-00(2013), Sliding Watertight Door Assemblies

iv. F-1197-00(2012), Sliding Watertight Door Control Systems

v. F-1271-90(2012), Spill Valves for Use in Marine Tank Liquid Overpressure

Protection Applications

vi F-XXX2, Tank Vent Pressure-Vacuum Relief Valves

vii. F-1273-91(2013), Tank Vent Flame Arrestors

ix. F-XXX4, Tank Vent Flame Screens

9. Boilerworker First and Chief, Bureau of Naval Personnel (NAVPERS) 10537, U.S. Navy.

10. Carbon Dioxide Extinguishing Systems, NFPA-12, National Fire Protection Association (NFPA).

11. Code for the Construction and Equipment of Mobile Offshore Drilling Units (MODU Code), IMO Resolution A.414(XI).

12. Care of Fire Hose, NFPA-198, NFPA.

13. Code of Safety for Dynamically Supported Craft, IMO.

14. Code of Safety for Diving Systems, IMO.

15. Code of Safety for Special Purpose Ships, IMO Resolution A.534(13).

16. Considerations for the Prevention of Furnace Explosions and Superheater Damage in Merchant Ship Boilers During Light-Offs, T&R R-23, the Society of Naval Architects and Marine Engineers (SNAME).

17. Control of Gas Hazards on Vessels to be Repaired, NFPA-306, NFPA.

18. Dangerous Properties of Industrial Materials, Sax.

19. Defects and Failures in Pressure Vessels and Piping, Helmut Thielsch. Reinhold Publishing Corp., New York.

20. Dry Chemical Extinguishing Systems, NFPA-17, NFPA.

21. Engineering Materials Handbook, Mantell. McGraw-Hill Book Co., New York.

22. Fiberglass Boat Design and Construction, Scott and DeGraff.

23. Fiberglass Boats, DuPlessis and DeGraff.

24. Fire Hose Coupling Screw Threads, NFPA-194, NFPA.

25. Fire Protection of Vessels During Construction, Repair and Lay-Up, NFPA-312, NFPA.

26. Flammable Liquids Code, NFPA-30, NFPA.

27. Flash Point Index of Trade Name Liquids, NFPA-325A, NFPA.

28. Foam Extinguishing Systems, NFPA-11, NFPA.

29. General Information for Grain Loading, International Cargo Gear Bureau, Inc.

30. Guide for Construction of Shipboard Elevators, ABS.

31. Guide for Container Equipment Inspection, Institute of International Container Lessors, Ltd.

32. Guide for Inert Gas Installations on Vessels Carrying Oil in Bulk, ABS.

33. Guide for Repair, Welding, Cladding and Straightening of Tail Shafts, ABS.

34. Guide for Centralized Control and Automation of Ship's Steam Propulsion Plant, T&R R3-23, SNAME.

35. Guide for Shipboard Centralized Control and Automation, ABS.

36. Guide for Steel Hull Welding, American Welding Society (AWS).

37. Guide for Underwater Inspection in Lieu of Drydocking Survey, ABS.

38. Guidelines for the Design and Construction of Offshore Supply Vessels.

39. Halon 1301, National Fire Prevention Association, NFPA-12A, NFPA (1987).

40. Handbook of Ship Calculations, Construction and Operation, Hughes.

41. Handbook of Test Methods and Practices, Naval Ship Systems Command (NAVSHIPS) 918828, U.S. Navy.

42. Handbook of Wooden Boat Construction, Chapelle.

43. Handbook on Sanitation of Vessel Construction, PHS No. 393, U.S. Public Health Service (USPHS).

44. Handbook on Sanitation of Vessels in Operation, PHS No. 68, USPHS.

45. Inert Gas Systems, IMO Publication, 1983 Edition, Reprinted 1987.

46. Inspection Manual, NFPA.

47. International Code for the Construction and Equipment of Ships Carrying Dangerous Chemicals in Bulk (IBC Code). The IBC Code is mandatory under both Chapter VII of SOLAS and Annex II of MARPOL 73/78 for chemical tankers constructed on or after 1 July 1986.

48. International Gas Carrier (IGC) Code. The IGC Code is mandatory under Chapter VII of SOLAS for gas carriers constructed after 1 July 1986.

49. Bulk Chemical (BCH) Code. The BCH Code is mandatory under Annex II of MARPOL 73/78 for chemical tankers constructed before 1 July 1986.

50. International Convention for Safe Containers, IMO.

51. International Safety Guide for Oil Tankers and Terminals (ISGOTT), 3rd Edition, International Chamber of Shipping.

52. Introduction to Steel Shipbuilding, Baker.

53. Lloyd's Register of Shipping Rules and Regulations for the Classification of Yachts and Small Craft (Lloyd's Rules).

54. Manual of Safe Practices in Offshore Operations, Offshore Operations Committee.

55. Marine Chemists Directory (current year), NFPA.

56. Marine Design Manual for Fiberglass Reinforced Plastics, McGraw-Hill.

57. Marine Engineering, Harrington. SNAME, 1971.

58. Marine Engineers Handbook, Lamberton and Marks.

59. Modern Ships, John M. LaDage. Cornell Maritime Press.

60. National Electrical Code, NFPA-70, NFPA.

61. National Electrical Safety Code, Handbook H 30, National Bureau of Standards, U.S. Department of Commerce.

62. Nondestructive Testing Handbook, Vol. I and II, R. C. McMaster, ed. The Society for Nondestructive Testing; Roland Press.

63. Personnel Qualification and Certification in Nondestructive Testing, Recommended Practice No. SNT-TC-1A, American Society for Nondestructive Testing.

64. Pleasure and Commercial Motor Craft, NFPA-302, NFPA.

65. Portable Fire Extinguishers, NFPA-10, NFPA.

66. Principles of Magnetic Particle Testing, Betz.

67. Principles of Naval Architecture, SNAME.

68. Principles of Penetrants, Betz.

69. Provisional Rules for the Approval of Filler Metals for Welding Higher Strength Steels, ABS.

70. Radiographs of Welds, International Institute of Welding (IIW).

71. Recommended Practice for Electrical Installations on Shipboard, Standard No. 45, Institute of Electrical and Electronic Engineers (IEEE).

72. Regulations for the Control of Pollution by Noxious Liquid Substances in Bulk, Annex II of MARPOL 73/78.

73. Requirements for Radiographic Inspection of Hull Welds, ABS.

74. Requirements for the Certification of the Construction and Survey of Cargo Gear on Merchant Vessels, ABS.

75. Requirements for the Certification of the Construction and Survey of Self-Unloading Cargo Gear on Great Lakes Vessels, ABS.

76. Rules and Regulations for the Classification of Yachts and Small Craft, Lloyd's Register of Shipping.

77. Rules for Building and Classing Aluminum Vessels, ABS.

78. Rules for Building and Classing Bulk Carriers for Service on the Great Lakes, ABS.

79. Rules for Building and Classing Mobile Offshore Drilling Units, ABS.

80. Rules for Building and Classing Reinforced Plastic Vessels, ABS.

81. Rules for Building and Classing Steel Barges for Offshore Service, ABS.

82. Rules for Building and Classing Steel Vessels, ABS.

83. Rules for Building and Classing Steel Vessels for Service on Rivers and Intracoastal Waterways, ABS.

84. Rules for Building and Classing Steel Vessels Under 61 Meters, ABS.

85. Rules for Building Wooden Hulls, ABS.

86. Rules for Nondestructive Inspection of Hull Welds, ABS.

87. Safety and Health In Dock Work - Code of Practice, The International Labor Organization (ILO).

88. Safety Code for Elevators, Dumbwaiters and Escalators, ANSI.

89. Safety Manual for Marine Oil-Fired Watertube Boilers, The National Safety Council.

90. Safety of Life At Sea (SOLAS 48, 60 and 74), IMO.

91. Ship Design and Construction, SNAME, 1980.

92. Ship to Ship Transfer Guide (Petroleum), International Chamber of Shipping/Oil Companies International Marine Forum.

93. Ship to Ship Transfer Guide (Liquefied Gases), International Chamber of Shipping/Oil Companies International Marine Forum.

94. SOLAS 74/83, Consolidated Text.

95. SOLAS 74, 1983 Amendments, Vol. III (IGC Code).

96. SOLAS 74, 1988 and 1989 Amendments.

97. Specifications by the American Society for Testing and Materials (All Parts), ASTM.

98. Standard Marking System for Valves, Fittings, Flanges and Unions, MSS-SP 25, The Manufacturers Standardization Society (MSS).

99. Standards for the Installation of Sprinkler Systems, NFPA-13, NFPA.

100. Standards for Marine-Type Electric Lighting Fixtures, Subject 595, Underwriters Laboratories, Inc. (UL).

101. Standards and Recommended Practices for Small Craft, American Boat and Yacht Council, Inc., (ABYC).

102. Standards of the American Welding Society, (AWS).

103. Standards of the Compressed Gas Association, (CGA).

104. Standards of the Marine Department, Underwriters Laboratories, Inc.

105. Standards of the Tubular Exchanger Manufacturers Association, (TEMA).

106. Static Electricity, NFPA-77, NFPA.

107. Steel Construction Manual, The American Institute of Steel Construction.

108. Storage and Handling of Liquefied Petroleum Gases, NFPA-58, NFPA.

109. Tanker Handbook for Deck Officers, C. Baptist.

110. Threshold Limit Values for Chemical Substances and Physical Agents in the Workroom Environment, (Annual) American Conference of Governmental Industrial Hygienists.

111. United States Code Annotated, Title 46.

112. Welding Handbook, Sections 1-5 (latest editions), AWS.

113. Wire Rope and Strand, Federal Specification RR-W410C.

114. X-Ray Standards for Production and Repair Welds, NAVSHIPS 250-692-2, U.S. Navy.

NOTE: Various maintenance manuals published by the manufacturers of boilers, turbines, aluminum components, etc., are also useful resources.

J. UNITED STATES MARITIME ADMINISTRATION (MARAD)

The Merchant Marine Act of 1936 (46 App. U.S.C. 1101 et seq.), as amended by the Merchant Marine Act of 1970, states that it is United States policy to foster the development and encourage the maintenance of a merchant marine. The agency charged with implementing this policy is the U.S. Maritime Administration (MARAD). In September 1981, MARAD became an agency of the Department of Transportation. Liaison between MARAD and the Coast Guard is intended to promote attainment of the mutual goal of merchant vessel safety.

K. HAZARDOUS MATERIAL DETERMINATIONS AND AUTHORITY

The regulations for combustible and flammable liquids carried on a vessel fall under either or both of the statutes discussed in the following paragraphs. For greater detail on the carriage of hazardous materials, see MSM II, Materiel Inspection, COMDTINST M16000.7A (series), Section F.

1. Hazardous Materials Transportation Act (HMTA) of 1974

The Hazardous Materials Transportation Act (HMTA) of 1974 can be found in 49 U.S.C. 1801-1812. For packaged material, the HMTA defines a hazardous material as "a substance or material that has been determined by the Secretary of the Department of Transportation (SECDOT) to be capable of posing an unreasonable risk to health, safety, and property when transported in commerce, and which has been so designated" (see 49 CFR 171.8). This is a very broad definition and includes many commodities that may not be allowed for shipment in bulk.

---

2. 46 U.S.C. 2101

For the purpose of bulk transportation, Title 46 U.S.C. defines a hazardous material as any liquid material or substance that is:

a. Flammable or combustible;

b. **Designated a hazardous substance under Section 311(b) of** the FWPCA, as amended (33 U.S.C. 1321); or

c. Designated a hazardous material under Section 104 of the HMTA (49 U.S.C. 1803).

CHAPTER 2: ADMINISTRATION OF MERCHANT VESSEL INSPECTIONS

A. ASSIGNMENT OF MARINE INSPECTORS

1. Introduction

Many factors have a bearing on the number of inspectors that are assigned to an inspection. One inspector (either deck or engineering) is usually sufficient to inspect small vessels such as tank barges, seagoing barges, or small passenger vessels. Larger vessels or those requiring an accelerated inspection may require two inspectors (deck and engineering) and perhaps more, as the need arises. The number and technical qualifications of inspectors necessary to conduct an adequate inspection or examination is at the discretion of the Officer in Charge, Marine Inspection (OCMI).

2. Training and Experience

Every inspector is considered either a deck inspector or an engineering inspector. The OCMI should ensure that all inspectors are cross-trained, within the limits of their capabilities, to serve in both capacities. Thus, an engineering inspector will normally be expected to be capable of making examinations such as the checking of repairs to a lifeboat. A deck inspector will likewise be expected to be capable of making simple engineering examinations, such as checking a fire pump.

3. Overseas Inspections

The United States is routinely asked to conduct inspections in overseas locations where our inspectors may be exposed to potential threats to their physical security. Coast Guard inspectors are easily identified as Americans and, if identified as Coast Guard officers, easily associated with the military. Although we have a responsibility to U.S. ship owners and operators and seafarers to carry out our commercial vessel safety mission, we are also responsible for ensuring the safety of our people. OCMIs must also keep in mind the potential impact that overseas inspection decisions may have on both local and national policy. Sector and Activity Commanders should follow the procedures outlined below when responding to requests for overseas inspections.

a. Requests for overseas inspections. Requests for overseas inspections should be routed within each office at a sufficiently high level to address the policy issues involved.

b. General requests. General requests inquiring whether the Coast Guard is sending inspectors into certain areas should be answered carefully to ensure that the

response does not include a statement that the Coast Guard is not traveling to a particular country. This can, and has, caused political consternation both within our government and with foreign governments. Responses to this type of general request should contain statements to the effect that no general Coast Guard travel bans exist and that inspector availability and assessment of the threat to personnel is done on a specific, case-by-case basis.

c. Threat assessment. The latest threat assessments should be reviewed when considering requests to conduct inspections of specific ships or in specific areas. To obtain these, contact district (oil), the International Affairs Office at Coast Guard Headquarters.

d. The State Department also issues travel advisories for U.S. citizens. The Citizens Emergency Center at the State Department in Washington, D.C. provides general information on possible danger areas for U.S. citizens around the world. They may be contacted at (202) 647-5225.

e. Message notification. If a preliminary decision is made to send an inspector overseas, then the OCMI must request country clearance from the cognizant U.S. Embassy or Consulate by message in accordance with COMDTINST 5000.5E.

f. The message must include the name of the inspector, the dates of travel, the purpose of the travel, a statement regarding whether assistance by post officials is/is not envisioned, and the name, position title, and telephone number of a contact person. See Figure 2-1 for the required message format and wording.

FIGURE 2-1: SAMPLE COUNTRY CLEARANCE REQUEST MESSAGE

FROM: YOUR PLA
TO: AMEMBASSY (IN CAPITAL LETTERS)
USDAO (IN CAPITAL LETTERS)
INFO: AMCOUNSUL (IF NEAR TO DESTINATION)
APPROPRIATE UNIFIED COMMAND (SEE LIST BELOW)
COMDT COGARD WASHINGTON DC//G-CI/G-OIN/G-OIS//
COGARD INTELCOORDCEN WASHINGTON DC
COMLANTAREA OR COMPACAREA COMMANDER
DISTRICT COMMANDER
SECSTATE WASHINGTON DC
ACTEUR, FESEC, MARSEC, GANTSEC IF APPROPRIATE
UNCLAS//N05050// (NOTE: ALL COMMANDANT TRAVEL SHOULD BE "CONFIDENTIAL.")
SUBJ: COUNTRY CLEARANCE REQUEST FOR COAST GUARD PERSONNEL
IAW THE DOD FOREIGN CLEARANCE GUIDE, REQUEST CLEARANCE AS FOLLOWS:
A. CITIES AND COUNTRIES TO BE VISITED.
B. FULL NAME, GRADE, POSITION TITLE, AND SECURITY CLEARANCE OF VISITOR(S).
C. SPECIFIC PURPOSE OF VISIT. (INCLUDE WHETHER CLASSIFIED INFORMATION WILL BE DISCLOSED ANJD THE AUTHORITY FOR DISCLOSURE). (AVOID ACRONYMS. A FULL EXPLANATION IN EASILY UNDERSTOOD TERMS IS REQUIRED.)
D. DATE AND NATURE OF INVITATIONS ON WHICH VISIT IS BASED, IF APPROPRIATE.
E. PROPOSED ITINERARY, INCLUDING ESTIMATED DATES/TIMES OF ARRIVAL AND DEPARTURE AND MODE OF TRANSPORTATION AT EACH PLACE.
F. ALTERNATE VISIT DATE, IF VISIT CANNOT BE ACCOMMODATED AT PREFERRED TIME.
G. NAME, GRADE, AND POSITION TITLE OF KEY PERSONNEL TO BE VISITED.
H. LOGISTICAL/ADMINISTRATIVE SUPPORT REQUIRED, INCLUDING BILLETING AND GROUND/AIR TRANSPORTATION. (IF NONE REQUIRED, FOLLOWING STATEMENT SHOULD BE INCLUDED: "ALL ARRANGEMENTS FOR TRAVEL AND ACCOMMODATIONS ARE BEING HANDLED BY TRAVELER; NO POST ASSISTANCE IS ANTICIPATED").
I. NAME AND PHONE NUMBER OF CG POINT OF CONTACT.
J. COMPLETE EXPLANATION IF REQUEST DOES NOT MEET REQUIRED LEAD TIME.
K. INCLUDE THE FOLLOWING STATEMENT "WE WILL ASSUME THAT COUNTRY CLEARANCE IS GRANTED UNLESS A NEGATIVE REPLY IS

RECEIVED" IN ALL MESSAGES WITH THE EXCEPTION OF MESSAGES TO AUSTRIA, BRAZIL, CUBA, FINLAND, LEBANON, NORTHERN IRELAND, PERU, RUSSIA AND SWEDEN. NOTE: THIS LIST MAY ALTER DUE TO POLITICAL CHANGES, CONSULT G-CI IF IN DOUBT.

USCINCLANT NORFOLK VA//J55// FOR CARIBBEAN
USCINCCENT MACDILL AFB FL// FOR MIDDLE EAST, EGYPT, HORN OF AFRICA AND PAKISTAN
USCINCEUR VAIHINGEN GF//ECJ4-SAA//FOR EUROPE (INCLUDING TURKEY, ISRAEL, LEBANON), AFRICA, RUSSIA
USCINCPAC HONOLULU HI//J5//FOR PACIFIC, AUSTRALIA, ASIA, INDIAN OCEAN COUNTRIES, RUSSIA
USCINCSO QUARRY HEIGHTS PM//SCCG//FOR CENTRAL AND SOUTH AMERICA

No Unified Command Notification Required for MEXICO or CANADA, *HOWEVER, PLEASE NOTE: Coast Guard personnel requesting clearance to Canada should address their request*
TO: AMEMBASSY OTTAWA//ECON//
INFO: USDAO OTTAWA CA

NOTE: Coast Guard Personnel are EXEMPT from obtaining DOD Special Area Clearance.

g. Overseas examinations of foreign vessels. Title 46 U.S.C. 3317 authorizes the Coast Guard to be reimbursed for examinations of foreign vessels conducted at foreign ports or places at the request of the owner or managing operator of the vessel.

(1) Based on this authorization, the Coast Guard conduct those overseas examinations on foreign vessels which will prove most beneficial to our Port State Control efforts while conserving time and resources.

(2) Activities which may warrant overseas travel include initial control verification exams of passenger vessels and examinations of other vessels of particular interest due to their unique design or type of cargo carried (e.g., liquefied gases). Most other foreign vessel exams will be conducted in U.S. ports.

(3) Field units which receive requests for overseas examinations of foreign vessels must contact Commandant (CG-CVC-2) for approval. Commandant (CG-CVC-2) will evaluate the request, and, if it is approved, will coordinate/organize any augmentation teams necessary to assist the field unit to perform the examination.

h. Denial of overseas inspection request. If a preliminary decision is made not to send an inspector, Commandant (CG-CVC-2) should be notified before any further action is taken. Commandant (CG-CVC-2) will contact the cognizant Coast Guard offices to ensure that all available information has been considered, and then advise the OCMI of any new information that bears on the preliminary decision. Responsibility for the final decision rests with the OCMI. Commandant (CG-CVC-2) must be advised of the final decision.

i. Inspector's responsibilities. When traveling overseas, the inspector should make his or her own travel arrangements directly with transportation carriers. The use of foreign carriers is also permitted to obtain indirect routing around high risk areas.

(1) Inspectors may use their own means of payment or a Government-issued credit card issued under the Travel Charge Card Program to facilitate overseas ticketing.

(2) Currently, these government-issued credit cards indicate that the holder is an employee of the U.S. Government. For this reason, inspectors should use discretion with this card.

(3) Cognizant OCMIs should ensure expeditious reimbursements of expenses with the district travel office in accordance with the Joint Travel Regulations.

j. Reporting of overseas inspections. Marine Safety Information System (MSIS) reports for inspections conducted overseas must have the proper country code indicated in the appropriate field of the Marine Inspection Activity Report (MIAR).

---

4. Performance of Reimbursable Overtime by Civilian Marine Inspectors

Depending on workloads and the availability of trained personnel, it may, at times, be necessary to assign civilian marine inspectors to duties that may involve the payment of overtime compensation.

a. Computation for services. 46 U.S.C. 2111 is to be used for computing overtime compensation for services performed after hours, on Sundays, and on holidays. Saturdays are considered normal work days. Overtime, other than that specifically provided for in Title 46, is computed according to 5 U.S.C. 5542.

b. Reimbursements from industry. Reimbursements from industry for overtime services by civilian inspectors are not to be viewed as an offset to the district's civilian overtime ceiling. 46 U.S.C. 2111 requires that overtime is paid to the employee out of annual appropriations and that reimbursements from industry are deposited in the U.S. Treasury. Rather than sidestepping the district's civilian overtime ceiling, the provisions of the statute will actually cause the overtime account to be drawn down more rapidly as payments to civilian documentation officers and inspectors are considerably more generous than those paid to other employees.

c. Availability of district funding. Presently, there are no means by which the Coast Guard may recover the deposits of overtime reimbursements from the Treasury. This may create a problem when overtime funding is no longer available at the district level. Until a means is established to recover the reimbursements deposited in the Treasury to supplement the overtime ceilings, Commandant (G-MOC) should be contacted regarding the possibility of providing program funds to cover overtime expenses for the purpose of preventing any disruption in our services.

d. Assignment of civilian inspectors. When assigning civilian inspectors, OCMIs should exercise care to ensure that the same companies are not repeatedly burdened with the extra cost while others escape the added expense altogether. This will avoid the appearance of unfairly treating any particular party. Also, a written acknowledgement must first be obtained from the vessel operators that they will reimburse the Government for overtime costs.

B. Regulations

The marine inspector is bound to encounter situations in which regulations that seem applicable are actually inappropriate for the situation or not in the best interest of overall safety. During the inspection of a vessel, an inspector must take care to ensure that each regulation being applied is relevant to the vessel and situation. Inspectors should be alert to such situations. Before requiring changes based on such a judgment call, an inspector should seek advice from the Chief, Inspection Division (CID), the Chief, Prevention Department (PDH) or the OCMI. When in doubt, the OCMI should request advice from the District Commander (or the Commandant, via the chain of command).

C. INSPECTION DEFICIENCIES

The guidance outlined below is not intended to provide detailed instruction on how to use the MISLE database. The MISLE Portal page (https://cgportal2.uscg.mil/communities/misle/SitePages/Home.aspx.) and various TRACEN Yorktown Marine Inspection "C" Schools are designed to provide user guides and various levels of training on the specific uses of MISLE.

Marine inspectors should follow the guidance provided in the CG-CVC-1 Mission Management System (MMS) work instruction for properly documenting deficiencies in MISLE. This instruction is located on the MISLE Portal page under the MISLE User Guides tab.

1. Definition

A deficiency is any failure to meet minimum requirements of the vessel inspection laws or regulations. An item (equipment, system, component, or structure) is considered deficient if:

a. It is presently unsatisfactory to the inspector; or

b. It has a reasonable possibility of becoming unsatisfactory prior to the next required inspection (COI, annual, periodic or hull examination).

2. Notice of Deficiency Using Vessel/Facility Inspection Requirements, Form CG-835

a. If, during the course of any vessel inspection or examination, the vessel or its equipment is found not to comply with the requirements of vessel inspection laws or regulations, the inspector should point out the deficiencies and discuss all required corrective actions with the vessel's owner or the owner's representative.

(1) When necessary, depending on the seriousness of the deficiency, the inspector should explain that failure to correct the deficiencies before completion of the inspection or examination may result in refusal to issue, or withdrawal, of the vessel's Certificate of Inspection (COI).

(2) The marine inspector should advise the vessel owner/representative that they may speak to the OCMI about any deficiency that will not be corrected by the date specified on the deficiency report. Depending on the nature of the deficiency, the OCMI may then decide whether or not to extent the compliance deadline.

(3) When authorized by the OCMI, deferment of correction of minor deficiencies may be settled by discussions between the vessel owner/representative and the inspector. If the owner or his or her representative desires further clarification or reconsideration of any requirements, that person should consult the OCMI.

(4) Deficiencies that may affect the vessel's seaworthiness, are unusually complex, or may indicate a problem with a system or item on other vessels, shall be entered into MISLE as soon as possible. Deficiencies must be entered in MISLE even if they were corrected prior to the end of the inspection. Entering corrected deficiencies allows for the effective use of the safety performance tracking capability afforded by MISLE.

b. The master/representative of the vessel must be notified of any deficiencies the marine inspector finds. Other officers with primary interest in the inspection, such as the chief mate or chief engineer, should also be kept fully informed, even though a port engineer or other owner's representative may be more directly concerned with correction of the deficiencies.

(1) The inspector's notification of the deficiency may be verbal or in writing, as circumstances dictate (see A2.C.3 below). Written notification of the requirement to correct a deficiency shall be on Vessel/Facility Inspection Requierments, Form CG-835, IAW 46 CFR 2.01-10.

(2) The original copy of Vessel/Facility Inspection Requierments, Form CG-835 should be issued to the vessel's master or, if not available, to either the chief engineer or the owner/representative. If issued to the owner/representative, that person's capacity with respect to the vessel (title), should be noted on the form.

d. When a vessel is permitted to depart with outstanding deficiencies following an inspection, the inspector shall ensure the time period for correction of those deficiencies is clearly annotated on the CG-835 form. The inspector shall ensure that outstanding deficiencies and any corrected deficiencies that may have directly affected the seaworthiness of the vessel, are entered into MISLE as soon as possible.

(1) On subsequent visits to the vessel, inspectors shall determine the status of any outstanding requirements by reviewing the vessel's record of deficiencies in MISLE prior to boarding the vessel. If there is a question regarding any outstanding requirements, the issuing office should be contacted. Deficiencies from prior exams should be cleared if they are corrected, or reissued with a new compliance date.

(2) Whether deficiencies are corrected or not, the witnessing inspector must make explanatory entries for each deficiency with the port, date, and his or her signature on the Vessel Inspection Record. MISLE should then be updated and the issuing office will be notified automatically by MISLE.

(3) Monthly reports should be pulled to ensure there are no outstanding requirements issued from your office.

---

3. When to Issue Vessel/Facility Inspection Requirements, Form CG-835

a. Notice of Vessel/Facility Inspection Requirements, Form CG-835 must be issued to cover outstanding deficiencies in the following cases:

(1) When it is apparent that the correction of a deficiency may be subject to controversy between the ship owner or operator and the Coast Guard.

(2) When it is desirable to make exact requirements a matter of record.

(3) When some deficiencies have not been corrected by the end of the inspection and are permitted to remain outstanding.

(4) When deficiencies have not been corrected before the vessel proceeds to another inspection zone for completion or continuation of an inspection.

(5) When it is anticipated that an inspection will be completed by another inspector.

(6) When the owner's representative requests a written requirement to cover items considered by the inspector to be deficiencies.

b. When deficiencies are not controversial and corrective action is being taken, the inspector may use discretion in determining whether or not to issue them on a CG-835 form. However, the deficiencies should still be documented and entered into MISLE so the data can be used to identify trends in the future. Written

requirements on form CG-835 should not be issued at the request of the owner's representative or a crewmember to cover repairs or changes initiated by the owner when such repairs or changes would not have been required by the inspector. However, when such repairs or changes are undertaken, they must be accomplished to the satisfaction of the inspector.

---

4. How to Write Deficiency Requirements

a. Inspectors should exercise special care when writing requirements to correct deficiencies.

(1) The master should be notified, in clear and concise language, of the nature of a deficiency and the steps that must be taken to correct it.

(2) Unless statutes, regulations, instructions, or established marine practice dictate otherwise, the method of correction should be left to the discretion of the owner or the owner's representative, subject to the inspector's approval.

b. Basis for requirements. Vessel/Facility Inspection Requirements, CG-835 requirements should be based on specific regulatory requirements. Where the regulations allow, requirements may be based on the discretion of the OCMI. Requirements should be clearly worded so that the master, chief engineer, or owner will understand the deficiency to be corrected. Requirements that cannot be supported by regulations or definitive OCMI policy should not be issued.

c. Completeness. Each written requirement should clearly describe the deficiency and include the required corrective action (e.g. repair in kind, prove proper operation). Requirements will normally have completion dates based upon policy established by the OCMI.

(1) The inspector should avoid vague statements, such as "Bring into compliance with 46 CFR."

(2) A statement of the inspector's authority (law or regulation) is not necessary on Vessel/Facility Inspection Requirements, Form CG-835 unless specifically required by the OCMI. However, when a particular law or regulation contains information that might clarify the terms of the requirements or suggest alternate means of compliance, reference to such sources may be made. It is recognized that requirements may be written under conditions requiring haste or circumstances where reference to authorities is not feasible.

d. Local modifications. In some inspection zones, standard wording has been adopted for frequently recurring requirements on Vessel / Facility Inspection Requierments, Form CG-835. This practice has proven to be advantageous to inspectors and vessel owners and operators, particularly in the inspection of small passenger vessels.

---

5. Notations in Inspection Reports

Refer to MSM Volume II, Material Inspection, COMDTINST M16000.7A (series), Chapter A3 for instruction on making notations in inspection reports.

---

6. Letters of Outstanding Deficiencies

a. Deficiencies may remain outstanding at the completion of an inspection or examination provided that they are not contrary to law, and, in the OCMI's opinion, they will not materially affect the safety of the vessel or the environment during the time they remain uncorrected. These deficiencies will normally fall into the following categories:

(1) Minor requirements, such as those for signs or small repairs, that can be readily accomplished by the ship's crew.

(2) Relatively minor items of equipment that are not then available but have been placed on order.

(3) Repairs that can be safely postponed and accomplished where those interested can most conveniently perform them.

(4) Deficiencies that remain outstanding when a vessel moves from one zone to another to complete an inspection.

(5) Deficiencies that can be more readily corrected when the vessel is in drydock.

(6) Deficiencies on vessels being laid up and placed out of operation.

(7) Deficiencies that are being appealed.

b. Notification procedures. Upon completion of the inspection or examination, all deficiencies for which a Vessel/Facility Inspection Requirements, CG-835 was issued must be entered into MISLE.

c. Extensions of time. Time limits for deficiency corrections may be extended for good cause by the issuing OCMI, the district commander, or the Commandant. The time limit on a deficiency should not normally be extended by another OCMI or district commander without the agreement of the OCMI who issued the requirement. In no case should a requirement be modified or cancelled by a person other than the issuing OCMI.

---

7. Deficiencies Reported by the Crew

a. General. All licensed officers are required by 46 U.S.C. 3315 to assist the marine inspector and to point out all known defects and imperfections. Inspectors should ask the master and chief engineer about deficiencies and should be receptive to all reports of deficiencies made by the ship's officers and crew.

(1) Each reported deficiency should be investigated and corrective action required when appropriate. The inspector should include a note concerning each complaint of deficiency in the inspector's report.

(2) Inspectors should be aware that 46 U.S.C. 3315 prohibits the disclosure of the sources of information about deficiencies.

b. Approaches from safety committees. Many vessels have safety committees under company or union sponsorship that meet regularly to consider safety matters. Almost all of these, particularly where materiel items are involved, are of concern to the Coast Guard.

(1) It is likely that inspectors will be approached by spokespersons of ships' safety committees, either verbally or by written petition. When such contact is made, the inspector must note those matters and inform the OCMI of the complaints and actions taken.

(2) This is necessary because copies of complaints are often forwarded to various officials, including the Commandant and members of Congress. The Commandant may then contact the OCMI for additional information.

---

8. Condemning Equipment in Use

a. OCMIs should not condemn or impose additional or different requirements on approved equipment or other inspection items that another OCMI has passed or accepted, except in the following cases:

(1) When deficiencies exist and were undiscovered due to inspection errors or omissions.

(2) When the item has since been damaged or has otherwise deteriorated to such an extent that it is no longer fit for the service intended.

(3) When the requirements of law or regulation have changed and the change is retroactive.

(4) When the route or service of the vessel is being changed, or alterations are being made to the vessel that make changes necessary for compliance with different regulations.

(5) When directed by the Commandant.

b. Resolution of disputed approvals. When an OCMI considers equipment or other inspection items previously approved by the Commandant or an OCMI to be unsuitable because of workmanship, arrangements, or design, the OCMIs should attempt to resolve the matter between themselves.

(1) If the problem cannot be resolved, no further action should be taken until a decision has been made by the cognizant district commander(s).

(2) When district commanders cannot reach agreement, the matter should be referred to Commandant (CG-CVC).

---

9. Deficiencies Overlooked at Prior Inspections

Deficiencies that were overlooked, by error or omission, during a previous inspection or by previous inspectors during the same inspection should normally be required to be corrected. The inspector should consult previous inspection records and contact the previous inspectors to determine the status of the item(s) in question. The current inspector should ensure that the item has not been previously approved or accepted as satisfactory before making additional requirements. The vessel owner should be given all possible consideration in the correction of items found to be deficient because of

inspection errors or omissions. Unless immediate correction of such items is considered critical to the safety of the vessel, the OCMI should allow a reasonable amount of time for their correction.

---

10. Changing of Inspectors During Inspections

Changing inspectors during an inspection should be avoided. When circumstances require such a change, there must be a clear understanding between the inspectors concerning approved items and outstanding deficiencies. Proper use of the Inspection Book, CG-840 and Vessel/Facility Inspection Requirements, Form CG-835 will facilitate this understanding. The relieving inspector should not change requirements imposed by the first inspector or impose additional requirements concerning items previously approved or accepted as satisfactory, unless the relieving inspector has received authority from the OCMI; Chief, Prevention Department; or the CID. These officers should confer with the first inspector before authorizing a change in requirements or imposing additional requirements.

---

11. Resolution of Requirements Between Inspection Zones

a. General procedures. When a vessel changes inspection zones during an inspection, or when any deficiencies issued by one OCMI may be completed in another zone, the requirements issued by the first OCMI must be passed to the next OCMI. If a vessel changes its home port or primary port of operation to another zone, the OCMI should ensure that any outstanding inspection cases are filed and that deficiencies are entered into MISLE.

b. Monitoring procedures. OCMIs must ensure that any deficiency requirements issued in another zone are completed. The OCMI who issued the notice of deficiency and the OCMI who last certificated the vessel will be notified automatically by MISLE that the requirements have been satisfied.

(1) Additional requirements should not normally be imposed on a vessel approved in one zone when it moves to another zone for a similar operation and route.

(a) When there is disagreement between OCMIs as to deficiencies or requirements, the matter should be referred to the district commander(s) for resolution.

(b) If the district commander(s) cannot reach agreement, the matter should be referred to Commandant (CG-CVC).

(2) Unless the situation is extremely hazardous, additional requirements should not be imposed before the matter is resolved. When an OCMI finds it necessary to change or impose additional requirements because of hazardous conditions, he or she should notify the first OCMI, the district commander(s) and Commandant (CG-CVC) by phone or email.

c. Transfer of records. When previous inspection records will help resolve questions concerning a vessel inspected in another zone, the OCMI should obtain a copy of such records.

D. SPECIAL CONSIDERATIONS

1. Introduction

The vessel inspection regulations include provisions for special actions and considerations for certain circumstances. In many cases, the Commandant or district commander holds the discretion to give special consideration. In some cases, the OCMI is given this authority and may further delegate the authority to inspectors. Other regulations authorize the inspector to make discretionary rulings on matters within the limits of unit policy. Provisions for special consideration should be used to provide practical application of the regulations and avoid unreasonable requirements, actions, or decisions unnecessary to maintaining an adequate degree of safety. This policy applies only to those regulations that expressly authorize these special provisions, i.e., 46 CFR 30.15, 70.15, 90.15, 108.105, 175.15, and 188.15.

2. OCMI's Role

Certain sections of the small passenger vessel regulations in 46 CFR Subchapters T and K authorize the OCMI to permit departures from specific requirements when warranted by special circumstances or arrangements. OCMIs must recognize that local practices have often proved safe and appropriate for local conditions, even if they do not conform specifically to regulations.

3. Inspector's Role

In their inspection reports, marine inspectors should note all items that require interpretations of regulations, and on which the OCMI, district commander, or the Commandant has given an interpretation or decision. Such items include equivalents, substitutions, acceptance of non-approved equipment, non-standard fuel tanks, certain marine engineering items, etc. Inspectors should also enter a note in MISLE to document the decision for future reference.

E. MAINTENANCE OF VESSEL INSPECTION RECORDS

1. Required Records

46 U.S.C. 3310 requires the Coast Guard to keep adequate inspection records. The OCMI should ensure that records of all actions pertaining to vessel inspection are maintained as required. Directives and file systems should be maintained in accordance with the Coast Guard Directives System, Commandant Instruction (COMDTINST) M5215.6 (series) and COMDTINST 5210.5 (series). Inspection records and files should be retained, destroyed, or transferred as required by the Paperwork Management Manual, COMDTINST M5212.12. (See Chapter 3).

2. Transfer of Records Between OCMIs

The inspection records covering the initial construction and inspection of all vessels, except those inspected under 46 CFR Subchapters T and K, must be maintained by the OCMI conducting the initial inspection, subject to the disposal instructions in COMDTINST M5212.12. With the exception of the vessels noted in the following paragraph, all current records, except those for the initial inspection, must be transferred to the zone where a vessel transfers its principal port of operation. Vessels inspected under 46 CFR Subchapters T and K should also have their initial inspection files transferred to the OCMI of the zone in which the vessel currently operates. When a vessel's principal area of operation shifts from one zone to another, its files must be transferred permanently from the first OCMI to the OCMI of the vessel’s new zone. In the case of a vessel that has temporarily shifted principal zones of operation, the files should be temporarily transferred when they are needed to resolve inspection questions. When transferring original files, the transferring office must retain copies in the event of mail loss or damage. Further, the receiving OCMI should ensure the vessel is added to the unit’s Fleet of Responsibility (FOR) in MISLE.

3. Certified Copies of Inspection Records

a. At times, certified copies of inspection records will be needed for court proceedings. These certified copies may be made by a photographic copying process, or by copying the record word for word when the record consists of entries on a form and the same type of form is available. The copy requiring certification should be certified by the OCMI (or acting OCMI) in a manner similar to the following (any questions concerning certification should be referred to the district legal officer):

> "I hereby certify that the attached is a true copy of the original record of inspection covering the inspection of the SS WHIZZ between 8 and 12 May 1985, on file in my office, and of which I am the custodian.
>
> Signed and dated at Philadelphia, PA this 15th date of May, 1985.
>
> (Signature)
>
> By John Doe, Captain, U.S. Coast Guard
> Officer in Charge, Marine Inspection
> Philadelphia, PA."

b. Certification of copies. If practical, the certified copy should be stamped with the Coast Guard seal.

(1) The certification must be attached to the record. It is not necessary to certify each page of an inspection report.

(2) Instructions with regard to charges for certification of documents are contained in 33 CFR 1.25 and 49 CFR 7.91. For policy concerning the release of investigative records to a court, see MSM Volume V, Investigations and Enforcement, COMDTINST M16000.10A (series).

(3) See Figure A2-2 for a sample certification of true copy.

FIGURE 2-2

CERTIFICATE OF TRUE COPY

(To be included in future revision)

CHAPTER 3: DOCUMENTATION OF VESSEL INSPECTIONS

A. VESSEL INSPECTION REPORTS AND RECORDS

1. Standard Forms

Standard inspection record and report forms, whether manually typed or generated through the Marine Information for Safety and Law Enforcement (MISLE), are the primary media for transmitting information from the marine inspector to the Officer in Charge, Marine Inspection (OCMI). The OCMI is legally responsible for the certification of vessels. These standard inspection record and report forms should--

a. Eliminate or reduce the collection and duplication of unnecessary information;

b. Provide uniform guides that may be modified to accommodate local conditions and needs for administration or for a particular inspection; and

c. Serve as the permanent record of inspections and certifications.

2. Use of Standard Forms

Due to the variety of vessel types and inspection requirements, it is important that the inspection forms do not limit or otherwise delineate the scope of an inspection. OCMIs are vested with the authority to modify the use of standard forms in order to meet local needs. For such modifications, the OCMI should maintain the primary objective of reducing the paperwork load on both the inspectors and the clerical staff. Practices to eliminate or reduce paperwork that are prohibited by instructions governing the use of forms must not be used.

B. VESSEL INSPECTION DOCUMENTS

This chapter also provides guidance to standardize entries on inspection documents that are issued to and maintained on board commercial vessels. To avoid potential problems from time lags in recording inspection data, a MISLE activity must be opened at the start of every vessel inspection rather than when the inspection is completed. This will assist vessel file users to determine if a required inspection is past due or has been undertaken in another OCMI zone. At a vessel's initial inspection for certification, the inspector should review all pertinent MISLE products to ensure that all information that should appear on the Certificate of Inspection (COI) and other documents is obtained for entry into MISLE. At each subsequent annual, periodic, drydock/hull exam, or inspection for certification, the inspector should review the COI and other vessel documents to verify their accuracy. The inspector should ensure that any changes that have occurred, such as change in owner or operator, propulsion, operating area, etc., are properly documented prior to the issuance of either an amended or new COI, or other documents.

C. VESSEL INSPECTION DOCUMENTATION

1. General Discussion

The accuracy and completeness of inspection reports is vital. These reports serve as public records of vessel inspections and reflect upon the professionalism of the inspector, the marine inspection program, and the Coast Guard as a whole. A MISLE activity is required for all inspections. Inspectors should follow the provisions of this section when preparing optional inspection booklets, CG-840, available on the CG Portal at the Commandant (CG-CVC) Web site. To help document inspection activities, use of the most recent version these booklets is encouraged.

2. Use of Booklets

Each 840 booklet is set up in outline form to serve a memory-jogging tool with appropriate reference citations. The booklets are considered job aids; however, the inspector may use a booklet as a draft record of the items checked during an inspection for later transfer to MISLE. The booklets were developed to be as complete as possible, with the goal of covering all items that should be examined during a particular inspection. However, the booklets may not encompass all facets of a particular vessel. Inspectors are cautioned against relying only on the items listed in a booklet in order to conduct a thorough inspection (see other chapters in this manual for further guidance in carrying out the various types of inspections).

3. Merchant Marine Inspection Requirement Form CG-835

Vessel/Facility Inspection Requirements, Form CG-835 is used to record all vessel conditions, equipment, or materials that do not comply with the requirements of statutes, regulations, or "good marine practice." See MSM Volume II, Materiel Inspection COMDTINST 16000.7B (series), Chapter A2 for additional guidance on the issuance of this form. Copies of all issued Vessel/Facility Inspection Requirements, Forms CG-835 should be included with the MISLE activity documentation and filed in the vessel’s “hard copy” file.

a. Outstanding deficiencies issued on Vessel/Facility Inspection Requirements, Form CG-835. Outstanding deficiencies issued on Vessel/Facility Inspection Requirements, Form CG-835 must also be entered in MISLE.

(1) A numbered block in an inspection booklet should not be initialed if an item is unsatisfactory. In such cases, the inspector should describe the deficiency on the blank page opposite the item, with the date of the entry.

(2) If the deficiency is corrected prior to completion of inspection, the numbered block may then be initialed, but the deficiency must still be entered into MISLE.

(3) If the item is not completed satisfactorily before completion of the inspection, and a requirement is issued on Merchant Marine Inspection Requirement Form CG-835, this should likewise be noted on the page opposite the item.

b. Partially completed items. Partially completed items should either be noted in the 840 booklet or in the inspection narrative in such a way that the status of each item can be easily understood by other inspectors.

c. Remarks. The inspector must make any remark entries in the “Remarks” inspection narrative section (including inspection narrative) for each inspection visit to a vessel.

d. Inspectors are encouraged to use a personal notebook or working copy of the CG-840 booklet to record daily remarks on inspections that last several days, weeks, or months. This will assist the inspector in drafting the final narrative summary at the conclusion of the inspection. Personal notebooks are the property of the individual inspector and need not be retained, submitted for review, or included in the official record.

e. Duplication in the inspection narrative of the check-off blocks in the Inspection Books, CG-840 is unnecessary. If an item is found satisfactory and the block is initialed by the inspector, repetition of that information in the inspection narrative is redundant. However, if repairs or replacements were required to make the item satisfactory, then a brief note in the inspection narrative inspection narrative may be appropriate.

f. Information that will assist subsequent inspectors in the conduct of their inspection should be included in the inspection narrative. For example, identification of which specific components were examined among a random sampling of a large group would aid future inspectors in their selection of which components to examine at their inspection.

Examples of entries:
"Visited vessel in company with [owner's representative] on [Date] at [Place] to conduct drydock examination for credit. This is a standard single-skin tank barge, with 8 integral cargo tanks, a void space in the forward rake, and a box void aft as shown by sketch. There is one cylindrical 7500 gallon diesel fuel tank on deck. The barge is approved for the carriage of Grade B and lower products."
"Examined all pressure/vacuum valves and flame screens after they were opened for inspection; all were found satisfactory with the exception of those noted on page [blank page number opposite the inspection item]."
"Examination of the vessel's eight combination fire nozzles revealed they were in good condition and suitable for this type of vessel, which requires only the solid stream nozzle. However, as these nozzles (described on page 9) are not Coast Guard approved, the matter was referred to the OCMI. After I witnessed a test that indicated superior performance of these nozzles compared to the approved straight-bore, the OCMI permitted acceptance under special consideration provisions of 46 CFR 175.25-1."
"All items listed on pages 4 through 7 were inspected and found satisfactory except as noted."
"Visited vessel to inspect progress of construction of the hull and internal structural members. All work was proceeding satisfactorily in accordance with approved plans. Several areas in the port fuel tank were marked for pickup welding."
"Witnessed a satisfactory 4 foot hydro on No. 2 P cargo tank, including examination of hull and deck area in way of tank. A final inspection of the vessel's entire underwater body was made prior to launching and found satisfactory. Initial drydock examination completed."
"Initial inspection for certification completed with four (4) outstanding deficiencies noted by attached Vessel/Facility Inspection Requirements, Form CG-835s. Issued temporary Certificate of Inspection this date and recorded information in Bridge Record Card."

g. Inspectors must record the following additional items:

(1) Spaces not entered. The inspector should make an entry in the inspection narrative regarding spaces that were inaccessible during an inspection for certification or annual and periodic inspections.

(a) All inspectors should make a pre-inspection check of previous inspection books and/or MISLE data to discover which spaces, if any, have not been entered in the recent history of the vessel.

(b) Because of careful recordkeeping, such a review of inspection books and MISLE data should produce an inventory of spaces entered/not entered throughout a vessel's history. Arrangements should be made to facilitate

inspection of those spaces that are due for inspection to ensure the structural integrity of the vessel.

(2) Extensive repairs/alterations. The inspector should briefly describe any extensive repairs/alterations in the inspection narrative. The inspector may attach a copy of shipyard specifications to the inspection report in lieu of writing a detailed description of the repair or alteration in the inspection narrative (e.g., "Extensive bottom and side shell plating required replacement due to general wastage. See attached specifications.").

h. Record of inspection page. The inspector must indicate on this page whether or not the vessel is fit for its intended route. The inspector should print his/her name on the record of inspection page and then sign where indicated.

(1) If the vessel is not considered fit for service, then the Chief, Inspection Department should be notified as soon as possible.

(2) The record of inspection page should also include the name of the vessel representative who accompanied the inspector during the inspection and that individual's contact information.

i. Record of unsatisfactory conditions or deficiencies identified. The process of recording deficiencies detected during the course of an inspection has always been conducted informally by marine inspectors through personal records, notes, or, in some cases, a formal work list which is provided to the owner's representative. By standardizing this existing process, we can make productive use of this valuable, and previously lost, information.

(1) As marine inspection program managers, representatives of the various Headquarters Divisions are often called upon by legislators and others in and out of government to produce records which show the value added by the marine inspection program.

(2) It is a mistake to interpret the scarcity of deficiencies noted in MISLE as proof that the Coast Guard does not find anything wrong during vessel inspections. MISLE records only show deficiencies that remain outstanding after the conclusion of an inspection, a number which ideally should be zero. Nonetheless, it is important to document and present a complete picture of the marine inspector's role in detecting vessel safety deficiencies.

(3) There are several advantages to increased visibility of the marine inspector's role. This additional information will improve the Coast Guard's ability to measure and monitor areas that are problematic and should become the focus of policy, procedures, or regulation. The Coast Guard will also be able to better

focus training for inspectors on vessels and/or systems with high deficiency rates. Finally, this information will enable us to evaluate the effectiveness of the owners/operators, classification societies, and other flag administrations in carrying out their maritime safety responsibilities.

(4) In addition to the information the inspection narrative, inspectors must complete a list of deficiencies identified during an inspection. This list must include all deficiencies noted by the inspector, including those corrected on the spot, those corrected prior to completion of the inspection, and those outstanding at the completion of the inspection. If the inspector prefers, they may use the inspection narrative section of the Inspection Book, CG-840 or a local form to list their deficiencies in place of the sample form provided.

(5) At the conclusion of the inspection, the inspector must ensure that all deficiencies identified during the inspection are entered into MISLE.

D. PERFORMANCE OF AUTOMATED MACHINERY AND EQUIPMENT

See 46 CFR Part 62 for automation regulations. Upon completion of underway tests of initial installations, the inspector must submit a letter reporting the performance of the vessel's automated machinery and equipment to Commandant (CG-CVC) in accordance with COMDTINST 16711.1 (series). See Chapter 6 of this volume and NVICs 1-69, 7-73, and 6-84 for additional information concerning automated main and auxiliary machinery.

E. U.S. PUBLIC HEALTH SERVICE (PHS) INSPECTION RECORDS

The Public Health Service (PHS) promulgates official certificates for sanitary inspections of commercial vessels. These certificates may be retained onboard.

F. LOCALLY MAINTAINED RECORDS

1. Measurement of Furnaces, Form CG-836

When the OCMI deems it necessary, the inspector should complete Form CG-836 after inspecting a firetube boiler. The completed report should be retained in the vessel's file.

2. Renewals of Fusible Plugs

When fusible plugs are renewed at other than the inspection for certification and no marine inspector is in attendance, the vessel’s Chief Engineer must submit a written report to the OCMI. The OCMI must ensure that the report is complete and consistent with the information requirements of 46 CFR 2.20-40(c) and 52.01-50(k). These reports should be included in the vessel's inspection records.

G. MARINE INFORMATION FOR SAFETY AND LAW ENFORCEMENT (MISLE)

1. Purpose

The purpose of MISLE is two-fold: to build safety performance histories of vessels, marine facilities, involved parties, and hazardous cargoes; and to focus and redirect marine safety activities and resources using these histories in analysis of safety degradation patterns and equipment failures.

H. CERTIFICATE OF INSPECTION (COI), STANDARD MISLE FORM

1. COI Entries—First Page

Information entered in the MISLE Vessel File Operating Details (VFOD) comprises the majority of page one of a COI. VFOD is where the OCMI specifies manning, route, number of passengers permitted for a vessel, as well as details regarding the carriage of passengers and cargo. The VFOD is divided into three sections used to collect information that will appear on the COI. The first section is used to specify the route of the vessel (using the Route Code), number of passengers permitted, and minimum crew required. For passenger vessels authorized for multiple routes with varying crew and passenger restrictions, the summary section should contain the crew and passenger requirements for the most restrictive of the routes authorized (e.g., if authorized 149 passengers on a “Coastwise” route and 99 passengers on an “Oceans” route, specify the Oceans route requirements). The second section of the VFOD specifies the manning requirements for the vessel. As above, if the vessel is authorized for multiple routes, the manning requirement for the most restrictive route must be entered. The third section of the VFOD is used to specify the details regarding the vessel's route, manning, cargo and passenger carriage, and any other conditions of operation. In this section, the OCMI may specify manning and passenger carriage restrictions for vessels authorized for multiple routes. Consult the applicable MISLE Transaction Guides for specific details concerning other MISLE products to be used for making entries.

2. Amplifying Guidance on Particular Portions of the COI

a. Passengers – general. It is the OCMI’s responsibility to determine the number of passengers that a vessel can accommodate and can carry with prudence and safety. (As explained in the following paragraphs, this does not apply to ferryboats.)

(1) The OCMI should not permit the number of passengers allowed to exceed that allowed by law or regulation. The number allowed should be based on specific criteria including, but not limited to, the vessel's intended operating area, lifesaving equipment carried, stability, deck area and or rail space.

(2) Maximum number on ferry vessels. 46 U.S.C. 3501 provides an exception for the number of passengers permitted to be carried on a ferry vessel, as stated on its COI. The maximum number of passengers permitted on a ferry will appear on the COI as "FERRY" when "FERRY" is entered as the Vessel Use Code in the Vessel File Design product (VFDD).

NOTE: When stability is a factor in limiting the maximum number of persons that can be carried safely on any ferry vessel, the total number of persons permitted aboard should be stated in the stability letter.

b. Persons on board other than the minimum operating crew. This policy is intended to give uniform guidance on how the manning data should be entered in MISLE for persons other than the minimum required crew.

(1) Other required crew. Other required crew consists of maintenance persons the OCMI has required due to special design or operation of a vessel. The number required should be listed with a specific description in the space provided.

(2) Other persons in crew. Other persons in crew are licensed and documented crew employed onboard to operate and maintain the vessel in addition to the minimum number of crew set by regulatory requirements. This includes persons in the stewards' department, additional licensed or documented crew which the owner wishes to carry to perform maintenance while underway, and hotel staff.

(3) Persons in addition to crew. These are individuals in addition to the crew on an inspected vessel which is not required to be inspected as a passenger vessel. This term includes persons onboard a vessel who are not employed in the business of the vessel. These persons are not required to hold a merchant mariner's certificate. Reference is made to 46 U.S.C. 3304 concerning the number of individuals in addition to the crew permitted on vessels other than passenger carrying vessels.

(4) Industrial personnel and scientific personnel. Industrial and scientific personnel are distinct from passengers, other required crew, other persons in crew, and persons in addition to crew. The number of industrial and scientific personnel employed aboard a vessel affects its structural fire protection requirements. For definitions of industrial and scientific personnel, see 46 CFR 90.10-15 and 46 CFR 188.10-71, respectively.

(a) If an industrial vessel of 300 GT or more is carrying over 12 industrial personnel, or an oceanographic research vessel is carrying over 16 scientific personnel, the vessels must be inspected for compliance with applicable structural fire protection regulations. The number of authorized industrial and scientific personnel must be identified, and their duties specifically described, on the COI through the MISLE VFOD "free form" blocks.

(b) Artificially inflating the other persons in crew and/or persons in addition to crew categories to avoid compliance with structural fire protection regulations or passenger vessel regulations is not permitted.

c. Reduced crews. When reduced crews are authorized for less than 24-hour operation, the OCMI must make a COI endorsement under "Route Permitted and Conditions of Operation." Multiple endorsements may be made on a vessel's COI when necessary to address changes in conditions or employment. For additional information, consult the MSM, Volume III, Marine Industry Personnel COMDTINST M16000.8B (series).

d. Small passenger vessels. See MSM Volume III, Marine Industry Personnel COMDTINST M16000.8B (series) Chapter 19 for detailed guidance on manning.

e. See MSM Volume II, Materiel Inspection COMDTINST M16000.7A (series), A3.H.3.a below for information regarding allowable reductions in the carriage of child size life preservers when extended size devices are carried onboard.

f. Automation. When the OCMI has approved a reduced manning level on the basis of an installation of automated control or monitoring systems, the COI must be appropriately endorsed in accordance with 46 CFR 62.50 and MSM Volume III, Marine Industry Personnel, COMDTINST M16000.8B, Chapters 21 and 23.

g. Route permitted and conditions of operation. This is the narrative portion in which the major route designation is stated, i.e., oceans coastwise; Great Lakes; lakes, bays and sounds; or rivers.

h. Limitations imposed or extensions granted on routes based on reasons like stability criteria, unique construction, operating areas, or operating characteristics of the vessel should be described by bodies of water, geographic points, distances from shore or geographic points, duration of voyage, daylight operation only, etc. Further conditions of operation, where applicable, would include manning endorsements and any other special endorsements deemed necessary by the OCMI.

NOTE: The route code entered does not map into the narrative portion.

i. Barges.

(1) Financial responsibility. Prior to the Oil Pollution Act of 1990 (OPA 90), the financial responsibility requirements of the Federal Water Pollution Control Act, as amended, provided for a reduction in the liability limits on inland oil barges for the removal of oil discharged into U.S. waters. For this purpose, inland oil barges were defined as non-self-propelled vessels carrying oil in bulk as cargo and certificated to operate only in the inland waters of the United States. OPA 90 removed these limits of liability. Therefore, for financial responsibility/liability purposes, it is not necessary to distinguish between inland oil barges and other oil barges on a COI.

NOTE: This reminder replaces previous text (superseded by OPA 90) regarding reduced financial responsibility for inland oil barges. Routes should continue to be limited for other reasons such as design and class limitations.

(2) Permissive crewing. Where a vessel owner/operator voluntarily elects to crew a barge not otherwise required to be crewed, the vessel's Route Permitted and Conditions of Operation section of the COI should be endorsed: "The vessel may carry [##] persons as maintenance persons with no duties connected with the navigation of the vessel." On seagoing barges over 100 GT, the endorsement should include the statement: "All maintenance persons must possess a merchant mariners certificate, and a minimum of 75 percent of those persons aboard must be U.S. citizens." This endorsement may be further modified to limit the route on which personnel may be aboard based upon load line, lifesaving equipment, or other relevant factors.

(3) Watchstanders. It is unnecessary to endorse a watchstander on tank barges, as he/she is to be included in the crew requirements.

(4) Carriage of vehicles. Endorsements for the carriage of vehicles on tank barges may be stated as "Permitted to carry vehicles - total weight 8,000 kg per unit; axle load 2,500 kg per axle. Vehicles may not be operated."

---

3. COI Entries - Attachments

Attachments to the COI are issued when there is more information required for a particular vessel than will fit onto the first page. This includes additional endorsements (see MSM Volume, Materiel Inspection, COMDTINST M16000.7A, II 3.H.4, below) and information on vessel particulars such as cargo authority and/or loading restrictions for tank vessels/barges, lifesaving and fire fighting equipment, machinery inspection status, stability letter, and pressure vessels. The following provides information on some

of the more frequently used and/or critical detail products. This is by no means an all encompassing list; review the MISLE user guide to ensure that each vessel has all applicable information entered accurately.

a. Lifesaving details.

(1) The number of persons for which lifesaving equipment is to be provided should normally be the same as the total persons carried; however, for ferry vessels, this figure should be the same as the number of life preservers required. It is only necessary to list the minimum number of items required by regulations; excess equipment does not need to be listed.

(2) NVIC 14-92 deals with use and carriage of lifejackets (life preservers) with height/weight limits that are lower than the traditional 41 kg (90 lb) for adults. Lifejackets with other, lower height/weight limits marked on them may be used to meet mandatory carriage requirements for persons as the label indicates. Adjustments to carriage requirements for life preservers may be made on the COI according to NVIC 14-92. When lifejackets on board have a lower limit of 1.45 m (57 in) or less, only 5 percent additional child-size devices must be carried on vessels with no limitation on adult or child passengers on its COI. Carriage of a mixture of lifejacket models/styles with lower size limits is not acceptable as the basis for reducing child-size lifejacket carriage requirements.

(3) Children and COI Endorsements. If no child-size lifejackets are carried on board, the vessel's COI must be endorsed--

(a) "For the carriage of ADULTS ONLY"; or

(b) "For the carriage of persons taller than XX m or weighing over WW kg. Replacement lifejackets must have an approval for all persons over XX m/WW kg or a smaller lower limit."

NOTE: When the paragraph (b) endorsement is used, the height/weight limits (XXX m/WW kg) are 1.45 m/34kg (57 in/75 lb) for the life preservers listed in enclosure (2) of NVIC 14-92. For life preservers with lower limits below 1.45 m (57 in), the height/weight limits must be taken from their label. A zero ("0") should be entered for the number of child's lifejackets in the Lifesaving Details section of the COI.

(4) The total number of persons that can be accommodated must be according to the nameplates on the items. The capacity of the rescue boat need not be included. A lifeboat suitable for rescue purposes must be listed as a lifeboat.

(5) This data should reflect the number of items that are actually carried to meet the minimum total capacity (number of persons) required by regulation. The total capacity of the required items must be listed.

b. Cargo authority.

(1) Carriage of oil. Each U.S. tankship and integrated tug/tank barge unit of 20,000 or more deadweight tons permitted to carry "oil" (46 U.S.C. 2101(20)) has the cargo authority is listed on its COI to specify the type of cargo it is authorized to carry, the applicable subchapter, and the loading constraints related to structure and stability.

(a) The proper authorization endorsement is determined from the applicable regulations in 33 CFR Part 157 and 46 CFR 32.53. Cargo grade restrictions are entered under "Highest Grade."

(b) The value for "Capacity" must be that of all integral cargo tanks, and the "Units" must be in barrels.

(c) If the vessel carries 46 CFR Subchapter O cargo, then the appropriate CFR Part must be indicated. Data regarding "Loading Constraints" will be provided by Commandant (G-MSC) and is to be entered as appropriate.

(d) Special cargo restrictions and/or exemptions, such as those found in 46 CFR 36.01-5 and 46 CFR 38.01-5 must be listed by endorsement under "Route Permitted and Conditions of Operation." The following are samples of appropriate wording for "Authorization" entries:

i. "Crude oil and flammable or combustible liquids."

ii. "Products and flammable or combustible liquids other than crude oil."

iii. "Products and combustible liquids."

iv. "Crude oil, products, and flammable or combustible liquids."

v. "Flammable liquids other than oil."

2. MARPOL Annex II/Noxious liquid substances (NLS). See NVIC 03-06 for information on applicable certificates, cargo record books, and endorsement to the Certificate of Inspection.

(a) “See “Cargo Authority” Located In “Conditions of Carriage.”

(b) Conditions of Carriage. The following statement should appear at the beginning of the COI "Conditions of Carriage" section: “Per 46 CFR 150.130, the person in charge of the barge (vessel) is responsible for ensuring that the compatibility requirements of 46 CFR 150 are met.”

(c) Once all the tank groups' characteristics and requirements have been verified by an inspector as matching those on a tank vessel's LAC, the following text from the MSC's plan approval letter should be entered in VFCC under another "Cargo Authority" heading: “Only those cargoes named in the vessel's list of authorized cargoes bearing marine safety center approved stamp dated (date) may be carried, and then only in the tanks indicated.”

3. Inland tank barges. The following statement should appear at the beginning of the COI of an inland tank barge under "Conditions of Carriage": “Per 46 CFR 150.130, the person in charge of the barge (vessel) is responsible for ensuring that the compatibility requirements of 46 CFR 150 are met. Cargoes must be checked for compatibility using the figures, tables, and appendices of 46 CFR 150 in conjunction with the reactive group numbers from the 'React Grp' column listed above the 'Specific Dangerous (i.e., hazardous) cargo authority' section.”

4. Vessels not in compliance with MARPOL Annex II. A self-propelled vessel or oceangoing non-self-propelled vessel, certificated under Subchapter D and which is not in compliance with the MARPOL Annex II regulations, should have a COI endorsement that excludes the carriage of NLS cargoes, e.g., "Vessel may not carry cargoes that are designated as NLS in 46 CFR 30.25, Table 30.25-1, 33 CFR 151.47, and 33 CFR 151.49." The standard cargo authority entered for the COI of these vessels is only by grade(s) of flammable or combustible liquids and does not distinguish NLS cargoes.

c. Additional marine inspection details. Hull examination dates/intervals should be entered in as an attachment to the COI. Other vessel particulars and systems such as fixed fire fighting systems, steering gear, and machinery can be entered into MISLE by referring to the MISLE user guide.

4. COI Entries - Additional Endorsements

a. Military Sealift Command (MSC) vessels. The following entries should be made for MSC vessels that are certificated:

(1) For vessel service, enter PUBLIC VESSEL only if the following conditions are met:

(a) The vessel is Navy owned and operated by a MSC civilian crew; or

(b) The vessel is demise chartered by the MSC and is operated by its own civilian crew.

(2) Vessels which are time chartered by the MSC, or are either Navy owned or demise chartered and operated by a contract operator are not considered public vessels. The class of vessel is as appropriate.

(3) Under "Route Permitted and Conditions of Operation," insert the following endorsement: “Naval vessel, in Service, civilian manned. This vessel has been inspected and certificated in accordance with the standards applicable to military sealift command vessels.”

NOTE: The term "in service" refers to MSC vessels that are manned by civilian crews, as opposed to those manned by naval crews and termed "in commission."

(4) "Persons in Addition To the Crew" should reflect the number of persons carried onboard a vessel who are connected with the business of the vessel but not classed as crew or passengers. Such persons include military liaison staff on transports or fleet support vessels, technicians and scientists on oceanographic research vessels, military guards on certain cargo vessels, etc. Such personnel should be reflected in the total persons allowed.

b. Seasonal restrictions. COI statements of seasonal restrictions should be as descriptive as possible, specifying details such as limitations on vessel routes and the scope of passenger-carrying authorizations. Seasonal limitations are intended to ensure the overall seaworthiness of the vessel and the safety of the passengers carried under differing operational conditions without completely halting the operation of the vessel during any specific period of time.

c. Manning requirements for vessels towing inspected passenger barges. These should be indicated on the COI issued to the barge (see the MSM Volume III, Marine Industry Personnel, COMDTINST M16000.8B (series)).

d. Endorsements for special cargoes. The endorsements required by 46 CFR 36.01-5 and 38.01-5 should be made as indicated.

e. Endorsements listing cargo names and relief valve calculations. See 46 CFR Part 154.17. Such endorsements should also be made for liquefied gas cargoes regulated solely under 46 CFR Subchapter D.

---

5. Crew Requirements

a. Maintenance persons. Maintenance persons may be listed in one of the available slots for required manning. A specific departmental affiliation may be included, e.g., engine maintenance person.

b. The qualifications of a position, as appropriate, may be further specified under "Route Permitted and Conditions of Operation," e.g., deck maintenance person (any deck rating), engine maintenance person (junior engineer, electrician, deck engine mechanic), or maintenance person (any deck or engine rating). Whenever a maintenance person is listed without departmental affiliation, it is left to the master's discretion to determine where and how to use that person. This action--

(1) Allows the master and chief engineer a degree of latitude in determining the ship's internal organization; and

(2) Minimizes the possibility of direct Coast Guard involvement in contractual matters of labor management.

NOTE: See MSM Volume III, Marine Industry Personnel, COMDTINST M16000.8B (series), for additional guidance.

b. Radio officers. When the requirement for a Radio Officer is solely to reinforce the Federal Communications Commission's authority, an asterisk should be entered in the slot for "Radio Officer," with the following endorsement made under "Route Permitted and Conditions of Operation": “If Required By the Federal Communications Commission.”

c. Liquefied gas carriers. The COI for a liquefied gas vessel should clearly state that the cargo officer and cargo systems engineer are non-watchstanders. A notation should be made under "Routes Permitted and Conditions of Operation" specifying that "The chief mate shall be designated the cargo officer and be non-watchstanding" and "The (first or second) assistant engineer shall be designated the cargo systems engineer and be non-watchstanding." The latter designation should be made by the OCMI.

d. Certificated engineering personnel. These should not be required on the COIs of river and other vessels exempted from this by 46 U.S.C. 8701 and 8702.

e. Statement of minimum complement. By law, the COI must state the minimum complement of licensed and certificated personnel necessary for the safe operation of the vessel; this requirement should be strictly followed.

f. Radar observer endorsements. These are not necessary, except on certificates for hydrofoils or air cushion vehicles (see MSM Volume III, Marine Industry Personnel, COMDTINST M16000.8B (series)). The regulatory requirements are sufficient without other special notations.

I. TEMPORARY CERTIFICATE OF INSPECTION, FORM CG-854

Temporary Certificate of Inspection Form CG-854, authorized by 46 U.S.C. 3309, provides evidence of the satisfactory completion of an inspection for certification. It has all the force and effect of a full term COI and permits operation of a vessel pending receipt of the COI generated by MISLE. This temporary COI is intended for use when the immediate issuance of a full term COI is not possible at the completion of an inspection. When the full term COI can be issued in time to meet the vessel's needs, a temporary COI should not be issued. A temporary COI should never be issued to a vessel that does not qualify for a COI. The vessel's master should be given one copy of the temporary COI while the OCMI retains the original. It is not the Commandant's intention that a COI be withheld pending correction of minor deficiencies after a temporary COI has been issued.

FORM CANCELLATION: Form CG-2801A, List of Merchant Vessels Under Construction or Conversion. Vessel owner/operators are no longer required to submit Form CG-2801A, List of Merchant Vessels Under Construction or Conversion.

The form was used to record Coast Guard inspection resources used for new construction of inspected vessels, uncertificated Military Sealift Command vessels, or vessel conversions. It included information on involvement by the American Bureau of Shipping under the Memorandum of Understanding dated 27 April 1982. This information historically has been used on an infrequent basis by Headquarters personnel; making monthly submissions unnecessary.

Despite its infrequent use, the inspection manhours reported on the subject form are still very important. This information represents a significant expenditure of MI program resources at many ports, particularly for new construction or conversion cases that may last for several months or years. The manhours are eventually used by Headquarters to substantiate both the billet structure in the MI program and future budget requests for resource allocations.

Each OCMI must account for and maintain these MI resource expenditures at the local level. Upon certification, all manhours expended since the initial inspection began, including plan review manhours expended by the unit, must be entered by inspection type into the activity narrative in MISLE.

All of the manhours should not be attributed to “initial certification.” If the vessel is not certificated, for whatever reason, the expended manhours must be entered into the MISLE activity before the activity is closed, thereby enabling this information to be retrieved for reporting purposes. The importance of accurate, complete and timely MISLE data entry cannot be overemphasized, even for those cases in which a vessel is

not certificated and the MISLE activity is closed.

J. AMENDING THE COI

Amendments to COIs should be made through the MISLE system. In cases where amendments involving last drydock dates or other changes will require a reissuance and reprinting of a vessel's COI, handwritten annual and periodic inspection entries on the COI will be lost when the COI is reissued. To prevent the loss of these entries on a reissued COI, an amendment should be made to the COI in MISLE whenever an annual or periodic inspection is conducted. This will ensure the inspections are recorded when COIs are reissued for any reason.

K. APPLICATION FOR WAIVER AND WAIVER ORDER, FORM CG-2633

This form must be completed and submitted as required by 46 CFR 2.45 and as indicated on the form itself. Copies of waivers issued must be forwarded to Commandant (G-543), as required by the subject matter. When the waiver is referred to the Commandant for action, the OCMI should submit a forwarding letter explaining the circumstances of the case.

L. PERMIT TO PROCEED TO ANOTHER PORT FOR REPAIRS, FORM CG-948

See MSM Volume II, Materiel Inspection, COMDTINST M16000.7A (series), Chapter C4.

M. PERMIT TO CARRY EXCURSION PARTY, FORM CG-949

1. Purpose

The OCMI should use Permit to Carry Excursion Party, Form CG-949, to allow a vessel to engage in a temporary excursion operation not permitted by its COI. This occurs when a passenger vessel is permitted to carry extra passengers or to operate on an extended route, or when a cargo or miscellaneous vessel is permitted to carry recreation parties on a 1-day basis. The permit should be issued for a limited period of time only, and should be considered a temporary supplement to the COI. The word "temporary" is stressed; an Excursion Permit should not be used as a device to circumvent normal inspection requirements.

2. Distribution

The Original copy of Permit to Carry Excursion Party, Form CG-949 should be issued directly to the master, operator, owner, or agent of the vessel; one copy should be electronically scanned and added to "documents" in MISLE. Additional copies may be obtained by the master, operator, owner, or agent of the vessel upon written request to the OCMI.

N. SOLAS CERTIFICATES

1. Passenger Ship Safety Certificate (PSSC), Form CG-968

The number of small passenger vessels certificated with international routes has steadily increased. When certificated for an international route, these vessels require a Passenger Ship Safety Certificate (PSSC) issued in accordance with SOLAS 74/83 in addition to the COI. See MSM Volume II, Materiel Inspection, (COMDTINST M.16000.7A (series), Chapter E2 regarding small passenger vessels subject to SOLAS.

a. Notification of Approval for SOLAS PSSC, Form CG-969A. Once a vessel desiring an international route has satisfactorily completed the initial inspection for certification, the OCMI should submit SOLAS PSSC, Form CG-969A to Commandant (CG-CVC). This form is normally accompanied by Federal Communications Commission (FCC) Form 806. Except for primary lifesaving equipment, only equipment required by SOLAS should be entered on the form.

b. SOLAS Exemption Certificate, Form CG-967. Exemptions granted by the OCMI in accordance with Regulations II-1/1(c), II-2/1(e) and III/3(a) of SOLAS 74/83 should be listed on the reverse side of SOLAS PSSC, Form CG-969A. This information should be included at the time of the initial inspection for issuance of a PSSC. The Exemption Certificate is issued in conjunction with the PSSC or a Cargo Ship Safety Equipment Certificate (Form CG-3347).

c. Issuance of PSSC and Exemption Certificates.

(1) Initial issue. Commandant (CG-CVC) issues the initial PSSC and Exemption Certificates based on SOLAS PSSC, Form CG-969A. The originals of the certificates, with copies, are forwarded to the certificating OCMI for distribution. The following statement must be entered on the Exemption Certificate (CG-967).

> "The below mentioned survey showed that this ship complied with the requirements of the below regulations or equivalent provisions accepted by the Government of the United States of America and substituted, therefore, in accordance with Regulation I/5 and reported in IMO SLS.14/CIRC.87 of 15 November 1989 (copy attached)."

(a) A copy of IMO SLS.14/CIRC.87 must be attached to the Exemption Certificate. Vessels receiving safety certificates under this arrangement must be issued 1 year COIs to correspond with the PSSC.

(b) These vessels must have drydock examinations at least once every 12 months. The authorized international route must be specified on the COI. If applicable, the vessel must have the appropriate Load Line Certificate.

(c) Compliance with, or exemption from, SOLAS radiotelegraphy and radiotelephony requirements must be verified by the FCC. Copies of PSSCs issued under this arrangement must be forwarded to Commandant (CG-CVC).

2. Subsequent issue. The OCMI is authorized to reissue subsequent recurring SOLAS PSSCs and Exemption Certificates. If any changes have been made to the exemptions originally granted by the OCMI, they must be submitted to Commandant (CG-CVC) for approval, in which case the certificates will be treated as an initial issue. Copies of reissued certificates should be forwarded to Commandant (CG-CVC).

---

2. SOLAS Cargo Ship Safety Certificates

a. Introduction. Cargo vessels and tankships of 500 and more GT that engage in international voyages are subject to SOLAS and are required to have the following SOLAS certificates as applicable:

(1) Cargo Ship Safety Construction Certificate, CG-4359 (Rev. 2-80).

(2) Supplement to the Cargo Ship Safety Construction Certificate, CG-4359-A (Rev. 2-81).

(3) Cargo Ship Safety Equipment Certificate, CG-3347 (Rev. 06-93).

(a) Supplement to the Cargo Ship Safety Equipment Certificate, CG-3347A (Rev. 2-81).

(b) Attachment to the Cargo Ship Safety Equipment Certificate, CG-3347B (Rev. 06-93).

b. Cargo Ship Safety Construction Certificate (SAFCON). This certificate may be issued, at the owner's discretion, by either the Coast Guard or the American Bureau of Shipping (ABS) on behalf of the Coast Guard. This certificate should be issued at the completion of a vessel's drydock exam with a period of validity of 5 years from the date of issue. When the ABS issues a SAFCON, ABS should provide the supplement and endorse the certificate as necessary. When the Coast Guard issues a SAFCON, the distribution should be the same as for the vessel's COI.

c. Cargo Ship Safety Equipment Certificate (SEC). The SEC should be issued by the Coast Guard at the completion of a vessel's inspection for certification. The SEC should expire when the COI expires.

(1) Except for primary lifesaving equipment, equipment required by SOLAS and actually on board should be noted by numbers of items present on the SEC form; equipment required by SOLAS but not on board should be noted by a zero.

(2) SOLAS certificates must not contain asterisks or notes indicating requirements or shortages. The Exemption Certificate noted above is necessary to reflect equipment omissions or authorized shortages.

d. Attachments. Attachments to the SEC and the SAFCON are forms generated by the International Maritime Organization (IMO) for issuance to cargo ships, including tankships, to indicate the completion of either unscheduled or mandatory annual surveys. Since SOLAS 74 became binding, the IMO has generated two attachments for the SEC and one for the SAFCON.

(1) An attachment for each certificate was developed for the 1978 SOLAS Protocol. A provision in that Protocol allowed the use of endorsements in lieu of the attachments. The Coast Guard chose to use such endorsements instead of the attachments. For surveys relating to the 1978 SOLAS Protocol, the following endorsement must be typed or stamped on the reverse of a SEC or SAFCON issued by the Coast Guard:

"In implementation of Regulation 6(B), Chapter I of the Protocol of 1978 Relating to the International Convention for the Safety of Life at Sea, 1974, the Government of the United States of America has instituted mandatory annual surveys."

Mandatory Annual Survey

Place Date

U.S. Coast Guard

NOTE: The SAFCON should have space for three mandatory annual surveys.

(2) A second attachment to the SEC (noted in N.2.a above) was developed to show compliance with the 1983 SOLAS Amendments. This attachment is issued by the Coast Guard at the same time as the SEC, is considered to be a part of the SEC, and has the same expiration date as the SEC. Paragraph II of the SEC is to be left blank with an asterisk to refer to this attachment.

e. Supplements. The supplements to the SEC and SAFCON certificates, listed in paragraph N.2.a.(1) and (2) above, are to be issued to tankships of 10,000 or more GT or 20,000 or more DWT, and to those 10 years and more of age. The supplement is considered to be a part of the relevant certificate to which it refers, and their dates of expiration should coincide.

O. CERTIFICATE OF COMPLIANCE (COC), FORM CG-3585

The Certificate of Compliance (COC) shall be used to document foreign vessel examinations of oil tankers, chemical tankers, gas carriers, passenger vessels, mobile offshore drilling units, and floating installations. The COC form includes detailed instructions for Port State Control Officers and marine inspectors based on the type of vessel, the authority used for the exam (port state control or domestic authority), and whether any deficiencies were identified.

P. IMO CERTIFICATES OF FITNESS (COF)

46 CFR Part 153 contains the regulations for the carriage of hazardous liquid cargoes by self-propelled vessels. 46 CFR Part 154 contains the regulations for the carriage of bulk liquefied gases by self-propelled vessels. These regulations implement the IMO Code for the Construction and Equipment of Ships Carrying Dangerous Chemicals in Bulk (BCH)

(Resolution MSC.9(53)) and the IMO Code for the Construction and Equipment of Ships Carrying Liquefied Gases in Bulk (Resolution A.328(IX)), respectively. Two additional IMO Codes were developed and made mandatory under SOLAS for ships built after 1 July 1986. These are the International Code for the Construction and Equipment of Ships Carrying Dangerous Chemicals in Bulk (IBC Code) (Resolution MSC 4(48)) and the International Code for the Construction and Equipment of Ships Carrying Liquefied Gases in Bulk(IGC) (Resolution MSC 5(48)). Each of these codes provides for the issuance of COFs to vessels that comply with the standards of these codes.

1. Considerations for Application

There are some liquefied gas ships that, due to their early date of construction, are not subject to the IMO Gas Code (Resolution A.328(IX)). IMO Resolution A.329(IX), adopted 12 November 1975, provides that gas ships delivered after 31 October 1976, but prior to implementation of the IMO Gas Code, must be reviewed in accordance with the provisions of the code to a reasonable and practical extent. It was recommended that these vessels be issued an IMO Gas Code COF, with endorsements listing the specific provisions of the IMO Gas Code with which they do not comply.

2. Issuance

a. COF for the Carriage of Liquefied Gases in Bulk, Form CG-5148.

(1) Upon request from the master, owner, or agent of a vessel that complies with the IMO Gas Code, the OCMI should issue a COF for a period not to exceed 2 years, dated to expire with the vessel's COI and SOLAS Cargo Ship Safety Equipment Certificate. It should be endorsed to indicate compliance with the International Gas Carrier Code (Resolution MSC 5(48)) if the vessel complies with that Code.

(2) For a vessel not subject to the Gas Code, Annex 4A of the certificate should be used to list those areas of the IMO Gas Code with which the vessel does not comply. This should be attached to the COF.

b. COF for the Carriage of Dangerous Chemicals in Bulk, Form CG-5148A. Upon request from the master, owner, or agent of a tank vessel that complies with the IMO Chemical Code, the OCMI should issue Form CG-5148A. The certificate should be issued for a period of 5 years, dated to expire with the vessel's COI and SOLAS Cargo Ship Safety Equipment Certificate. The COF should be endorsed to indicate compliance with either the BCH or the IBC, whichever applies.

3. Certificate Entries

Many of the entries on COF for the Carriage of Liquefied Gases in Bulk, Forms CG-5148 and COF for the Carriage of Dangerous Chemicals in Bulk, CG-5148A require data developed during the technical review process. The MSC will tabulate the data required for the certificate as it is developed and forward it to the cognizant OCMI. This will avoid lengthy file searches when the vessel is ready to be certificated.

4. Copies Required and Distribution

Forms COF for the Carriage of Liquefied Gases in Bulk, CG-5148 and COF for the Carriage of Dangerous Chemicals in Bulk, CG-5148A should be prepared with sufficient copies for the following distribution:

a. Original: Issued to the master, owner, or agent of the vessel, to be maintained on board the vessel.

b. Two copies to Commandant (CG-CVC), via District (p).

c. One copy is the issuing OCMI's file copy.

d. One copy to the MSC for vessel file.

e. One copy to the owner or agent of the vessel (if requested).

Q. VESSEL INSPECTION RECORD CARD, FORM CG-2832

In addition to the MISLE data, Vessel Inspection Record Card, Form CG-2832 provides the inspector with ready information as to the inspection status of a specific vessel when it is boarded for various inspections. Recent inspection information from a previous port, which may not yet be entered into MISLE, should be recorded on this form. The use of this form does not diminish the OCMI’s discretion regarding types or frequency of inspections. Rather, it is a tool with which the OCMI can better determine the need for further inspections. This form must be carried on ocean and coastwise cargo vessels (including tank vessels) of 500 or more GT, and ocean and coastwise passenger vessels of any gross tonnage (except those inspected under 46 CFR Subchapters T and K). It must be posted in the pilothouse in a suitably installed frame.

1. Entries

At the conclusion of each inspection, the inspector should enter the type of inspection conducted, pertinent remarks, drills conducted, port of inspection, his/her signature, and the date on Vessel Inspection Record Card, Form CG-2832. Each inspector who boards a vessel should examine this record to learn what inspections have been conducted, verify the correctness of the inspection status in MISLE, and determine whether any further inspections are necessary. Entries should be made in ink and in accordance with the instructions printed on the form and the policy below.

a. Initial entries. Upon completion of the inspection for certification, the inspector should fill out Vessel Inspection Record Card, Form CG-2832 and post it in the installed pilothouse frame.

(1) When a vessel is permitted to proceed to another port before inspection is completed, the initial inspector should enter "Began" and the type of inspection and date (e.g., "Began COI").

(2) When a subsequent inspector has completed the inspection, that inspector should enter on a new line "Completed" and the type of inspection (e.g., "Completed COI"). When another type of inspection, such as a drydock examination or a lifeboat weight test, is performed during the course of the inspection for certification, the inspector should only enter "Annual, Periodic COI".

b. Subsequent inspections. At the completion of each annual and periodic inspection, the inspector should make an entry on a new line under "Type of Inspection."

(1) When two or more distinct inspections are conducted at the same time, all should be entered on the same line, if possible.

(2) In the case of continuing inspections involving more than one port, only those parts of the inspections that are completed at the same port should be entered on the same line. Individual visits made during the course of an inspection should not be entered.

c. Remarks. This section is for information that will aid subsequent inspectors. For example, when conducting inspections incidental to repairs, an inspector should make a brief entry in “Remarks” indicating the nature of the repairs or alterations.

(1) If the inspector does not enter all tanks or cargo holds during a COI, he or she should list those tanks or holds that were entered in the “Remarks” section. For drydock examinations, the inspector should indicate which sea valves were opened and inspected.

(2) When a vessel is permitted to sail with outstanding deficiencies after any type of inspection, an entry should be made in the "Remarks" section to inform subsequent inspectors.

d. Drills. The inspector should check both columns for every entry, even when the type of inspection is defined as including one or both drills. When a fire or boat drill is held independently of another inspection, the inspector should enter "Drills" in the first column and appropriate notations in the other columns.

e. Port, signature, and date. These should be entered upon completion of the inspection. Only the inspector making the entry should sign the card, even when two or more inspectors participate in the total inspection.

f. Transferred information. If lifeboat weight tests are not conducted at the time that a new Form CG-2832 is posted, the date of the last weight test and the port where the test was witnessed should be transferred to the new card. Likewise, when remarks on the old card concerning cargo tanks, cargo holds, or sea valves have not changed, the information should be transferred. This information should be the first entry on the new card and should be signed by the inspector.

g. Additional cards required. To reflect all inspections of the vessel, it may be necessary to keep extra blank Vessel Inspection Record Cards on board the vessel.

---

2. Disposition of Outdated Cards

After the inspection for certification, the previous Vessel Inspection Record Card(s) may be destroyed or placed in the OCMI's file.

R. MOBILE OFFSHORE DRILLING UNIT (MODU) SAFETY CERTIFICATE, FORM CG-5334

The OCMI issues Mobile Offshore Drilling Unit (MODU) Safety Certificate, Form CG-5334 to Mobile Offshore Drilling Units (MODUs) that comply with the applicable provisions of IMO Resolution A.414 (XI) (the "MODU Code"). The MODU Code was adopted on 15 November 1979, upon request by unit operators. Distribution of Mobile Offshore Drilling Unit (MODU) Safety Certificate, Form CG-5334 should be the same as for a COI.

Except for primary lifesaving equipment, only equipment required by the IMO MODU Code and actually aboard should be entered in paragraph 3 of Mobile Offshore Drilling

Unit (MODU) Safety Certificate, Form CG-5334 (e.g., 2 lifeboats for 80 persons, 4 inflatable life rafts for 80 persons, 84 life jackets, and 8 life buoys). Exemptions granted in accordance with section 1.4 of the MODU Code should be listed in paragraph 4 of the form. If additional space is needed to complete these paragraphs, the reverse of the form may be used.

S. TRACKING ITEMS OF SPECIAL NOTE AND SPECIAL DESIGN FEATURES IN MISLE

One of the primary advantages of MISLE is that it provides the OCMI with the ability to call up a particular vessel, whether U.S. or foreign flag, and obtain a readout of the inspection history of that vessel.

DOCTRINE

1. Inspection Notes (General)

When conditions are discovered during an inspection that should be highlighted for scrutiny at later inspections, the inspector should enter an inspection note in MISLE under the “Notes” tab. The note must be assigned a "Retain Until" date. The note will remain current until this date. After this date passes, the note will remain part of the vessel’s MISLE file, but will only be viewable when “view all notes” box is selected in the Notes tab.

---

2. Inspection Notes (Special Design Features)

Based on the plan review of a vessel, the MSC may advise the OCMI of special design features on a vessel that require entry into MISLE Inspection Note. Conditions of particular note on a vessel must be made a permanent part of the vessel's MISLE inspection at initial or subsequent inspections, as appropriate. Copies of applicable correspondence should be scanned and added to “documents.” For vessels that travel to, and are inspected by, different zones, the Inspection Note will alert the OCMI to the particular conditions that must receive specific attention by the inspector at each inspection.

a. Special design features. Technological advances in the design, construction, and outfitting of vessels frequently outdate specific requirements in existing regulations.

b. Structural deficiencies. Reviews of Report of Equipment Failure on Inspected Vessel, Form CG-2752, Report of Structural Failure, Collision Damage or Fire Damage to Inspected Vessel, and other casualty studies have revealed that a particular vessel or vessel class may experience initial or recurring structural failures due to either poor design or repair techniques.

(1) When such a situation is discovered, Commandant should be notified. See MSM Volume II, Materiel Inspection, COMDTINST M16000.7A (series), Chapter A5 concerning structural failure reports for more information.

(2) Such conditions should also become a permanent part of the vessel's inspection record in MISLE.

(3) Structural deficiencies that are identified as a class problem by Commandant will be noted by Commandant (CG-CVC) for all vessels in that class.

CHAPTER 4: APPROVAL OF PLANS AND SPECIFICATIONS

A. INTRODUCTION

It is the Commandant's responsibility to determine that vessels subject to inspection meet the requirements of the applicable sections of the Code of Federal Regulations (CFR). The primary means of accomplishing this task, in addition to actual inspection of a vessel by field units, is the review and approval of vessel plans and specifications. The general requirements for plans, drawings, or blueprints are found in 46 CFR 2.90-1. For detailed specifications, see NVIC 8-84.

B. SUBMITTAL PROCEDURES

Plans may be submitted to the Officer in Charge, Marine Inspection (OCMI), the Marine Safety Center (MSC), Commandant (CG-CVC), or to the American Bureau of Shipping (ABS) in accordance with NVIC 3-84 or the Memorandum of Understanding between the Coast Guard and ABS, as discussed in NVIC 10-82, CH-2.

1. Submittal to the OCMI

When the OCMI receives a set of plans, he or she should determine the extent of the new construction or conversion project and decide whether the OCMI or the MSC will review the plans. In many cases, the OCMI may determine that he or she does not have either the personnel or the technical resources to conduct plan review. In such instances, the plans should be examined for the presence of any items that warrant special attention, and then forwarded to the MSC for review. Once the OCMI has reviewed the plans, they should be stamped "Approved," "Disapproved," "Return for Revision," or "Examined." The stamp should include the date and the OCMI's signature. At least one set of the plans should then be returned to the originator with a cover letter that includes any outstanding comments. The OCMI should retain at least one set of the plans on file.

2. Submittal to the MSC

Vessel plans may be submitted directly to the MSC. When this is the case, the MSC normally will not begin plan review until the cognizant OCMI has received an application for Inspection for Certification. Three copies of each plan should be submitted to the MSC for review. Upon completion of plan review, one set of the plans will be returned, with the comment letter, directly to the originator; one set will be retained by the MSC; and a third set will be forwarded to the OCMI with jurisdiction over the vessel. Because of personal knowledge the OCMI may have of the vessel and its intended service or operating area, the OCMI may determine that certain items do not comply with applicable regulations or do not provide the required degree of safety. In these cases, the MSC should be notified promptly of any items that the OCMI considers

worthy of special consideration or reconsideration. OCMIs should communicate with the MSC or Commandant (CG-CVC), as appropriate, when requests are received for inspection of new construction, major repairs, or conversions for which approved plans and related correspondence are not held.

3. Submittal to ABS

The provisions of NVICs 10-82, Change 2, and 3-84 apply to the submittal of vessel plans to ABS.

C. PLANS AND SPECIFICATION DESIGNATIONS

Whenever plans of inspected vessels are submitted, they must be identified by vessel name and official number whenever known. In the case of a new vessel, designation by shipyard work order number or hull number is sufficient until the vessel name is known; then the vessel's name must be added to the plan. In the conversion of an existing vessel, the new name should be used if it is known, as well as the former name and type designation. Tank vessel plans must be accompanied by information concerning the grades of liquid cargo the vessel will carry and its proposed service. Tank barges shall also be designated as manned or unmanned.

D. SPECIAL SUBMITTAL PROCEDURES

1. Submittal of Electrical Plans

a. Submittal to the OCMI. When electrical plans required by 46 CFR 110.25 are submitted to the OCMI, the following plans must be forwarded to the MSC for action:

(1) Switchboard wiring diagrams.

(2) Switchboard material and nameplate lists.

(3) Elementary wiring diagrams of metering and automatic switch gear.

(4) Descriptions of operation of propulsion control and bus transfer switch gear.

(5) Elementary one-line wiring diagrams of power systems.

(6) Electric plant summaries showing connected loads and calculated operating loads for various conditions of operation.

(7) Elementary wiring diagrams of steering gear alarm circuits, ventilation shutdown control general alarm systems, and fire protection systems.

(8) Elementary wiring diagrams and isometric or deck wiring diagrams of electric watertight door systems and power operated lifeboat winches.

(9) Hazardous locations drawings.

b. Review by either OCMI or MSC. Other plans listed in 46 CFR 110.25 but not listed above may be acted upon directly by the OCMI, or they may be transmitted to the MSC for action.

c. Revisions to plans. Subsequent revisions of the plans listed above may be addressed directly by the OCMI, or they may be submitted to the MSC for action. When major changes or revisions are made on these plans, they must be forwarded to the MSC for action.

---

2. Submittal of Cargo Gear Plans

Plans for cargo gear that have been reviewed and approved by ABS or the International Cargo Gear Bureau, Inc. (ICGB) need not be submitted to the Coast Guard for further review and approval.

---

3. Submittal of Boiler Plans

Boilers must be designed in accordance with 46 CFR Parts 52 or 53. These parts adopt Section I and Section IV of the American Society of Mechanical Engineers (ASME) Code with modifications to account for the marine environment. It is imperative that the additional requirements in 46 CFR Parts 52 or 53 are identified and met in the design stage to avoid possible rejection of the boiler during installation. For boilers constructed in accordance with 46 CFR Part 52, plans and calculations must be certified by a Registered Professional Engineer (RPE) licensed by one of the fifty states of the United States, the District of Columbia, or U.S. Territories. The RPE's license must be current at the time he or she certifies any plans or calculations. The RPE’s certification must appear on each design drawing and on the front page of the design calculations. In addition, the professional engineer should provide a signed statement that the boiler meets the applicable Coast Guard design requirements. The plans must be submitted as early as possible to the MSC for review prior to installation of the boilers. The plans will be reviewed only to the extent necessary to establish that the correct procedures for design

certification are being followed. Submission of plans and calculations is not required for boilers constructed in accordance with 46 CFR Part 53. Boilers which are automatically controlled must have their control plans approved (see 46 CFR Part 63).

---

4. Submittal of Pressure Vessel Plans

a. Requirements. Plans and calculations for Class I-L and II-L pressure vessels and for those pressure vessels that contain hazardous materials must be submitted to the MSC for approval.

(1) For other pressure vessels, see 46 CFR 54.01-5 and 54.01-15 for the applicable regulations.

(2) Plans required to be available to the inspector under 46 CFR 54-01-5(e) need only be requested for pressure vessels of unusual design, service or pressure.

b. Certification by a RPE. A RPE may certify a sepia or original drawing if they include the date of certification. Blueprints made from a certified sepia or original drawing are acceptable provided the copy of the RPE's certification is legible. Some RPEs certify a plan by stamping it; others by signing and dating a plan and then embossing the signature with a raised seal. If the document is certified with a raised seal on the original plan (sepia, etc.), then the information contained thereon must be reproducible on all copies.

c. Method of certifying plans. All plans must be certified by RPE as compliant with Section VIII, Division 1 of the ASME Code, as modified by 46 CFR Part 54.

(1) There are no requirements as to the specific wording that the RPE must use for this certification.

(2) The certification may appear on the original plan, from which copies may be made, or the RPE may individually sign and certify each copy of the plan.

(3) Certification may appear on each page of the calculations, or there may be one certification for the entire set of calculations.

(4) The method of certification should be to the satisfaction of the OCMI, but it is recommended that a consistent method is used that either provides for the notation of each plan or the creation of a cover letter with a certification statement. Such a cover letter must include a list of all applicable plans by number, title, and revision or alteration.

d. Alterations. Alterations and revisions to plans must be dated. Revisions made to a plan after it is certified by a RPE but before the pressure vessel is installed must

be checked and certified again by the RPE as being in compliance with the Code and 46 CFR Part 54. Alterations or repairs to pressure vessels that have been put into service need not be certified by a RPE, but must be approved and inspected by the cognizant OCMI.

---

5. Submittal of structural fire protection plans for certain small passenger vessels

Structural fire protection plans for new construction small passenger vessels that will either carry more than 150 passengers or which have overnight accommodations for more than 49 passengers must be submitted to the MSC for action.

a. Plans returned for revision. In cases when the MSC finds major or numerous minor structural fire protection deficiencies, the MSC will return the plans to the owner or designer for revision. Appeals or questions concerning the extent of required design changes should be directed to the MSC. The MSC should consult with the OCMI when resolving appeals or considering requests for equivalency.

b. Plans approved, with comments. When a plan includes numerous minor deficiencies or areas that are unclear to the plan reviewer, but that can be resolved more readily by the OCMI, the plans are marked "Approved with Comments" and forwarded to the cognizant OCMI.

(1) At this point, the MSC has completed action on the plan and the responsibility for assuring compliance and resolving comments shifts to the OCMI. The OCMI then has the discretion to either require compliance with the MSC's comments or to accept alternate arrangements that satisfy the intent of the regulations.

(2) Questions of compliance with comments forwarded with an approved plan and appeals of inspection issues should be addressed to the OCMI.

c. Resolving outstanding deficiencies. The status of all structural fire protection plan submissions should be verified by the responsible inspector during the final inspection for certification.

(1) If any plans remain that are still marked "Return for Revision," it is incumbent upon the OCMI and the MSC to work together closely to determine the status of any outstanding deficiency, and the necessary corrective action to be taken.

(2) Serious deficiencies should result in either a delay in certification until the plans are revised and approved and the deficiency corrected, or the issuance of a Vessel/Facility Inspection Requirements, Form CG-835, to complete the plan

review process and make any necessary modifications within a specified period of time. Restrictions on the number of passengers authorized may also be appropriate.

---

6. Submittal of Plans for SOLAS Foreign Passenger Vessels

a. Vessels over 100 GT. Plan review is considered a matter of routine for foreign flag vessels over 100 GT with berth or stateroom accommodations for at least 50 passengers. 46 U.S.C. 3505 prevents a foreign vessel from departing a U.S. port with passengers embarked if the Secretary determines that the vessel is not in compliance with SOLAS.

(1) NVIC 1-85 addresses the procedures for plan submittal for verification of a vessel's compliance with the applicable fire safety standards. This plan review, although not required by law or regulation, is essential to the timely conduct of the initial Control verification Examination (CVE). If the owner/operator/builder fails to take advantage of this opportunity, it is likely that a full and thorough inspection will not be possible without significant delay.

(2) When an OCMI has advance knowledge of an initial U.S. voyage of a vessel in this category, he/she should make known to the appropriate vessel representatives the importance of plan submission.

b. Lead time. Plans should be submitted to the MSC at least 45 days prior to the vessel’s arrival at its first U.S. port of call. Earlier submission is encouraged, but plans should not be submitted more than 90 days prior to the vessel’s arrival at its first U.S. port of call.

c. Verification. The goal of MSC’s plan review is to verify compliance with the applicable standards and to facilitate the initial CVE, not to bestow approval. Plans submitted to the MSC should indicate Flag Administration approval. Upon completion of both fire safety and stability plan review, the MSC will forward the review results and the plans to the OCMI. The submitter will be informed of the results, particularly if the MSC notes deficiencies or requires more information.

d. Conceptual review. If, in the design stage or early in the construction stage, an owner or builder wants to discuss design to ensure acceptance, the OCMI should direct them to CG-CVC for conceptual review. When vessels have employed novel design features based on interpretation of SOLAS, even timely plan review under NVIC 1-85 may not ensure the vessel will be acceptable for U.S. operations. The OCMI should encourage these vessel owners or builders to be in

contact with Commandant (CG-CVC) early in the design or construction phases, unless deemed clearly unnecessary.

E. SEQUENCE OF PLAN SUBMITTALS

1. General Requirements

For the proper evaluation of vessel construction plans, it is essential that the following basic plans for all vessels, except those inspected under 46 CFR Subchapter T, are forwarded prior to submittal of the other plans listed in 46 CFR.

a. Specifications (hull, machinery, and electrical).

b. General arrangement.

c. Midship section

d. Lines.

e. Curves of form.

f. Calculation of intact stability.

g. Capacity.

h. One-line wiring diagram of the electrical system.

2. Passenger Vessels

In the case of passenger vessels inspected under 46 CFR Subchapter H, the following additional plans must also be submitted:

a. Floodable length curves.

b. Calculations of stability in intact and final flooding conditions.

c. Fire control plan.

F. PLANS FOR IDENTICAL TANK BARGES

A new barge is sometimes identical in structure and piping to that of a previously approved barge. To avoid duplication and unnecessary submittal of plans for construction of such a barge, the following procedures should be followed:

1. Proposed Barges

For proposed barges that are going to be identical to previously-approved barges, only general design, hull structure, electrical, and piping plans must be submitted to the MSC for approval.

NOTE: A barge that is based on an already-approved barge must be built in the same yard as the original barge.

2. Extensions of Approvals

When a barge is identical in construction to a previously-approved barge, it is unnecessary to submit new plans.

The cognizant OCMI can give the new barge an extension of the existing barge's approval by letter. The MSC should be informed of the new barge's hull and contract numbers so that its records can be kept current.

3. Non-structural Details

The construction details of any barge that do not involve the vessel structure, such as connections or deck fittings, can be approved by the OCMI in lieu of the MSC.

4. Alterations

When previously-approved construction is changed by a significant alteration, the plans discussed in Subpart F.1 of this chapter must be resubmitted to the MSC for consideration.

The OCMI will determine the significance of the alteration on the merits of the particular case.

G. APPROVAL PROCEDURES

The information provided below is in addition to the requirements for these plans contained in the applicable subchapters of 46 CFR and sections of 33 CFR. These standards are suitable for typical vessels. The same degree of safety that these standards establish for typical vessels must be maintained in plans for a vessel of unusual form, arrangement, or construction.

1. Passenger Vessel Plans

a. General standards. The ABS Rules for Building and Classing Steel Vessels will generally be accepted as a standard for the review of structural plans for the construction, alteration, or repair of typical passenger vessels.

b. Uses of insulation and covering materials. Approved structural insulation, bulkhead panels, and deck coverings may be used to achieve various structural fire protection classifications for steel bulkheads and decks required by 46 CFR 72.05.

(1) The Coast Guard published NVIC 9-97, a "Guide to Structural Fire Protection Aboard Merchant Vessels" to provide information for shipbuilders and others concerned. The sketches accompanying this NVIC show the types, thicknesses, and relative positions of materials necessary to meet Class A-60, A-30, or A-15 requirements. The NVIC does not include Class A-0 construction because no insulation is required on structural steel bulkheads or decks to meet Class A-0 requirements.

(2) Since it is impossible to anticipate all combinations of materials that a vessel might use, approval will be given to arrangements differing from these sketches if the alternative arrangements provide equivalent integrity and heat transmission properties.

(3) For lists of approved insulation, bulkhead panels, and incombustible materials, see the Equipment Lists, Commandant Instruction (COMDTINST M16714.3, previously CG-190). Current changes are published in the *Federal Register* and the *Federal Register* reprint.

2. Cargo and Misc. Vessel Plans

The ABS Rules for Building and Classing Steel Vessels or Rules for Building and Classing Steel Vessels under 61 Meters (200 Feet) in Length will generally be accepted as a standard for the review of structural plans for the construction, alteration, or repair of cargo and miscellaneous vessels.

3. MODUs

The ABS Rules for Building and Classing MODUs and Det Norske Veritas Rules for Classification of Mobile Offshore Units will generally be accepted as standards for the review of structural plans for the construction, alteration, or repair of MODUs.

4. Tank Vessel Plans

a. Plan approval. The ABS Rules for Building and Classing Steel Vessels will generally be accepted as a standard for the review of structural plans for the construction, alteration, or repair of tank ships. The ABS Rules for Building and Classing Steel Vessels for Service on Rivers and Intracoastal Waterways and the Rules for Building and Classing Steel Barges for Offshore Service are accepted as standards for the determination of scantlings for tank barges.

b. Construction details affecting cleaning/gas-freeing of cargo tanks. One must take particular care to avoid any arrangement of the structural members that would prevent effective cleaning or gas-freeing of a liquid cargo tank. A plan should show that there are adequate provisions for drainage in all longitudinal and transverse members within a tank. Any arrangement of longitudinals, stiffeners, skegs, bilge keels, fenders, or other members that results in the creation of a possible gas pocket, either in the cargo tanks or in areas contiguous to these tanks, should generally not be approved.

5. Plans for Scuppers, Sanitary Discharges, Tank Overflows, Overboard Discharges, Etc.

Various NVICs include explanatory discussions and sketches of installations that will be approved. Proposed methods other than those specifically illustrated in these NVICs may be approved if they meet the applicable requirements of 46 CFR 56.50-95.

CHAPTER 5: VESSEL CONSTRUCTION, CONVERSIONS, ALTERATIONS, AND REPAIRS

A. INTRODUCTION

The inspection of a vessel during construction or conversion is normally considered an initial inspection. The scope of such inspections and the standards for construction of vessels and equipment are covered in the applicable regulations. See MSM Volume II, Material Inspection, COMDTINST 16000.7A (series), Chapter A4 concerning approval of plans and specifications, and MSM Volume II, Material Inspection, COMDTINST 16000.7A (series),Chapter B1 concerning inspection of vessels for certification.

Inspections must be conducted during construction and upon completion of the work, as necessary, to determine that the vessel may be safely operated in the service in which it is employed. Reports or inspections by the Officer in Charge, Marine Inspection (OCMI) are not required for minor repairs by replacements with spare parts. However, when repairs are accomplished in a foreign port or under emergency conditions at sea, they must be reported to the OCMI at the first port where the vessel calls after such repairs are made. The OCMI must determine, based on the report they receive, if it is necessary for a marine inspector to attend the vessel and if the repair should be considered temporary or permanent. Whenever feasible, extensive examinations or tests (such as for boilers) may be delayed until the next periodic inspection. Final acceptance of repairs must not be made until the OCMI finds all aspects of the repair satisfactory.

B. REFERENCES

1. Regulations

Requirements for notifying the Coast Guard of repairs or alterations affecting the safety of a vessel or its machinery, or movement of a vessel to another port for repairs, are contained in 46 CFR 2.01-15. The following regulations also require that the OCMI be notified of repairs or alterations affecting the safety of the vessel and mandate, if the vessel is subject to inspection, that inspections be held:

TYPE	CFR CITATION
Tank Vessels	46 CFR 31.10-25
Marine Engineering	46 CFR 50.05-10
Passenger Vessels	46 CFR 71.55
Cargo and Miscellaneous Vessels	46 CFR 91.45
Electrical Engineering	46 CFR 110.25
Public Nautical School Ships	46 CFR 167.30-1
Subdivision and Stability	46 CFR 170.005
Small Passenger Vessels	46 CFR 176.120 (Sub T) 46 CFR 115.120 (Sub K)
Oceanographic Research Vessels	46 CFR 189.45-1

2. American Bureau of Shipping (ABS) Publications

The American Bureau of Shipping (ABS) has produced numerous publications that contain requirements and instructions for the production of sound, effective hull welds. Rules for Building and Classing Steel Vessels and Rules for Building and Classing Steel Barges for Offshore Service are examples of these publications, which are generally accepted by the Coast Guard as standards. See MSM Volume II, Material Inspection, COMDTINST 16000.7A (series),Chapter A2 for a list of ABS publications.

3. American Society of Mechanical Engineers (ASME) Code

46 CFR 57.02-1 states that the Coast Guard has adopted Section IX, "Welding and Brazing Qualifications," of the ASME Code, with certain limitations and modifications. Section IX, as modified by 46 CFR Part 57, is used as a standard for judging the quality of piping and machinery welds.

4. Navigation and Vessel Inspection Circular (NVIC) 7-68

Inspection personnel must become thoroughly familiar with the contents of NVIC 7-68, "Notes on Inspection and Repair of Steel Hulls." This NVIC provides guidance on the inspection and repair of steel-hulled vessels for certification. for more details, see MSM Volume II, Material Inspection, COMDTINST 16000.7A (series),Chapter B1.

C. CONSTRUCTION OF VESSELS

1. General Standards

Vessels to which the inspection statutes and regulations apply must be constructed in accordance with approved plans, specifications, and applicable regulations.

2. Bulkheads and Decks

NVIC 9-97, "Guide to Structural Fire Protection Aboard Merchant Vessels," contains information concerning approved insulation, bulkhead panels, and deck coverings used on most vessels. Cargo or miscellaneous vessels of 4,000 and more GT, built prior to 1 January 1962, may continue to use plywood for nonstructural interior bulkheads in their superstructures, providing that they meet the requirements of 46 CFR 92.05 and 92.07-90. The Coast Guard realizes that there are other materials that minimize fire hazards as required by 46 CFR 92.05 and 92.07; the use of such materials is recommended. Plywood is prohibited for nonstructural interior bulkheads in the superstructures of passenger and tank vessels, and all cargo and miscellaneous vessels of 4,000 and more GT contracted for on or after 1 January 1962.

3. Living Spaces Aboard Tank Vessels

a. General requirements. The requirements governing construction of the accommodation spaces (staterooms, hospital spaces, passageways) and public spaces, such as messrooms and recreation rooms, on tank vessels are prescribed in 46 CFR Subchapter D.

(1) “Fire-resistive material” must be used in the construction and insulation of crew accommodation spaces on tank vessels. The term “fire-resistive material” means noncombustible material approved under 46 CFR 164.009 and listed as “noncombustible materials” in Equipment Lists, Commandant Instruction (COMDTINST) M16714.3.

(2) All construction materials, including panels, insulation and any associated support materials, used within living spaces must be approved noncombustible materials.

b. The only combustible construction materials permitted within living spaces are decorative veneers and trim on the panels of staterooms and public spaces. No combustible materials are permitted in the passageways or in hidden spaces.

There are also restrictions on the types of furniture or furnishings authorized on board tank vessels.

---

4. Lap-Welded Joints In Tank Barges

a. Some shipyards make tank barges with lap-welded strakes, since lap-welded construction can be cheaper and easier than butt-welded construction. (Small shipyards usually use lap-welded construction.) Some lapped joints may be practically unavoidable in any vessel construction; for example, tank barges usually have lapped joints at the turn of the bilge and at the deck edge. Neither the Coast Guard nor ABS has published rules specifically limiting or prohibiting the use of lap-welded joints. However, their use has the following disadvantages:

(1) A lapped joint has a void that can form a gas pocket if the fillet weld on the inside is not tight. Several such gas pockets could make the gas-freeing of a cargo tank difficult. In addition, these voids could provide a route for leakage of gas or liquid cargo from one tank to another.

(2) There is no way to test the tightness of the inside fillet weld, since the usual methods of testing a tank will indicate leaks only if the inside and outside welds of a lapped joint are not tight.

(3) Lapped joints usually experience an increased rate of corrosion.

(4) A tank with lapped joints is more difficult to clean than a smooth tank with butt-welded joints.

b. Conditions of acceptance. Lap-welded joints may be accepted in way of cargo tanks on tank barges if--

(1) Welded stopwaters are provided in each lapped seam in way of oiltight bulkheads;

(2) The overlap of the plates complies with ABS rules, which specify that "Lapped joints are generally to have overlap of not less width than twice the thinner plate thickness plus one inch." The size of the overlap should not be excessive, to avoid the creation of large void spaces; and

(3) The joints are continuously welded on both sides.

c. The use of lap-welded seams in tank barges should be discouraged, but not prohibited unless the inspector finds a failure to meet these requirements.

---

5. Single-Dogged Hatches and Scuttles

Hatches on inspected vessels are generally subject to the approval of the OCMI, according to their suitability for the intended locations on board and their use. There is no provision for type approval and they are not normally seen in detail on plans submitted for the OCMI's approval.

---

6. Fiberglass Gratings

a. General. Fiberglass gratings are not specifically addressed in the individual vessel regulations. However, fiberglass is combustible; therefore, its use must be limited based on the general requirements to reduce hazards from fire.

(1) Basically, fire-retardant fiberglass may be used anywhere except in accommodation areas, and in any other area where its failure could hinder escape or access by firefighters.

(2) Although all fiberglass must be fire-retardant, there are no Coast Guard approvals for fire-retardant fiberglass gratings or cable trays. However, the OCMI may authorize its use in particular installations, considering its fire retardance and the criteria in subparagraph C.6.c of this chapter, below. The manufacturer should provide the Coast Guard inspector with appropriate test data; a report showing a flame spread rating less than 25 according to the American Society for Testing Materials (ASTM) Standard E-84 would constitute appropriate evidence. Fiberglass cable trays may be used in exterior locations and in machinery spaces, provided that they are not installed in concealed spaces.

b. Restrictions on use. Fiberglass gratings must not be used--

(1) Within the accommodation area;

(2) In areas where their failure could hinder escape or firefighter access. Vessels fitted with deck foam firefighting systems must have steel or equivalent access to the foam monitors (e.g., deck grating to foam monitors must be steel or equivalent); or

(3) For cargo tank hatch covers on all foreign tank ships while trading in U.S. waters. Those vessels found not to be in compliance with this policy should be issued a deficiency notice to correct the situation within a reasonably brief time period.

c. Authorized uses. Since the approval of fiberglass cable trays and gratings is so dependent on the specific location and application, it is not possible for the Commandant to grant general approvals. In the past, however, the use of fiberglass gratings aboard inspected vessels has been authorized in the following areas:

(1) Sea chest screenings.

(2) Small sundeck awnings and supports.

(3) Lifeboat bilge flooring.

(4) Electrical control flooring.

(5) Pipe guards on deck, in cargo holds, and in enginerooms.

(6) Fore and aft main deck catwalks.

(7) Main deck crossover catwalks.

(8) Removable guards over hawseholes, anchor hawsepipes, and scuppers.

(9) Personnel barriers, such as protection for electrical panels.

(10) Ladders, platforms, and catwalks located within double bottoms, bilges, peak tanks, fuel tanks, liquid bulk cargo tanks, and other spaces not normally entered when underway.

(11) Ship staging and work platforms (Occupational Safety and Health Administration (OSHA) requirements may also apply).

(12) Platforms and ladders located on radar, radio, or other electrical apparatus masts.

(13) Platforms or walkways on kingposts.

(14) Overlay on existing weather decks to provide slip-resistant, self-draining walking surfaces.

(15) Overlay on steel decking around electrical equipment to provide for insulation and safety of personnel.

(16) Elevated flooring in boatswain's lockers.

---

7. Hull Welding Standards for Aluminum Small Passenger Vessels (T-Boats)

46 CFR 177.300 incorporates, by reference, various non-Coast Guard standards with which a builder must comply to satisfactorily meet minimum structural design requirements. These are broad requirements which are not otherwise defined, particularly with respect to construction details such as welding.

Inspections of aluminum T-boats built in the late 1980's and early 1990's revealed that such T-boats' shell plate fit-up and edge preparation was often such that a proper root gap was not achieved. Because of this, a full penetration weld could not be made consistently in the construction of the vessels.

Essentially, the shell plate was square-butted together and ground by hand to produce a rough bevel. This procedure effectively left a shoulder in the joint which was not assimilated during the welding process. Further, there was no attempt made to back gouge the weld from the opposite side to remove the discontinuity. Because of this, a lack of fusion remained when a cap pass was applied to the back side, clearly apparent when the weld is x-rayed.

This type of shell welding process is not acceptable for any type of inspected vessel where the long term effects of fatigue could adversely affect the strength of these connections. This could result in failure while in service and/or be less resistant to impact from mechanical damage.

OCMIs must ensure that the joint design and welding of butt joints strictly adheres to the provisions in the ABS Rules for Building and Classing Aluminum Vessels (1975), Chapter 30, Section 30.7, or to the provisions of Lloyd's Rules and Regulations for Classification of Yachts and Small Craft, Part 2, Chapter 3, dependent on the standard used to meet the structural design requirement.

D. VESSEL REPAIRS, ALTERATIONS, AND "HOT WORK"

The issue of avoiding casualties on all vessels under repair is extremely complicated, due to the possible presence of explosive gases and sources of ignition created by the use of flame or spark producing tools. No repairs; alterations; or other such operations involving riveting, welding, burning, or like fire-producing actions may be made until the requirements of 46 CFR 35.01-1 have been met. These regulations set forth the provisions under which a certified marine chemist will make a decision as to whether the work can be accomplished safely (see Part I of this Chapter). A tank vessel may have only hot work performed in or on the boundaries of a tank previously containing flammable liquids after the tank has been cleaned and gas-freed by conventional methods, and when the surrounding tanks have been cleaned and gas-freed or inerted with carbon dioxide or water. 33 CFR 126.15(c) applies to vessels conducting hot work while moored at designated waterfront facilities.

E. INSPECTION AND REPAIR OF TANK BARGES

1. Introduction

Tank barges employed primarily in river or inland service are generally towed alongside or pushed ahead, as opposed to being towed astern. Barges in these services are subjected to rigors of locking and fleeting operations that seagoing barges or self-propelled vessels do not normally experience. Some distinct structural problems have evolved as a result of this.

2. Hull Damage Considerations

a. Introduction. While the following guidance was conceived generally to address the problems occurring on vessels in river service, the benefits of preventing pollution incidents through its application may be more universally useful. Therefore, this guidance is applicable to all tank barges with areas of the cargo envelope (excluding the deck) that are not protected by a double hull.

b. Causes. Normal river and inland operations result in frequent structural deformations of a barge's hull. The rubbing of barges against one another and against lock walls causes the hull plating in some areas of the vessel to wear thin (side plating against framing members, barge corners, ends, and knuckles), while the majority of plating remains in good condition. Such wearing diminishes the plate thickness in these areas and causes plate deformation at the edges of the internals. Continued deformation and metal working results in many weakened

areas that are extremely prone to crack initiation and growth. Such degradation of strength in the cargo envelope (the hull) makes river and inland barges particularly prone to pollution incidents resulting from the minor damage of routine operations or low-energy collisions.

---

3. Inspection Standards

The extent of inspection and the types of repairs necessary to ensure that a tank barge can operate safely will depend upon the barge's age, route, and other considerations.

It is not justifiable to impose less stringent inspection or repair conditions upon tank barges that operate along routes with minimal exposure to severe weather or sea conditions if the less-stringent standards could increase the likelihood of a pollution incident.

The provisions of NVIC 7-68 must always be applied to all tank barges.

The following additional notes apply to the inspection of single-hulled tank barges:

a. Deficiencies. The possibility of a pollution incident arising from a deficiency must be considered when determining whether a deficiency compromises a vessel's suitability for its intended service. A vessel whose condition is considered likely to cause a pollution incident is not suitable for carriage of oil in bulk.

b. General evaluation of hull plating. Tank barges are subject to the general causes of deterioration noted in NVIC 7-68. However, because of the frequent rigors of locking and fleeting operations, particular attention must be given to end and sideshell plating that must withstand continuous wear.

   (1) The greatest loss in plate thickness can be expected where such plating is stiffened by internal structural supports or bulkheads. Often, plating between structural supports will show little loss in plate thickness, while plating supported by internals will be extremely thin.

   (2) The acceptable degree of hull plating deterioration has traditionally been evaluated by considering the effect of the reduced plate thickness on total hull strength. For specific limits for deterioration of various areas of the vessel, see NVIC 7-68. Localized wastage in excess of these limits has generally been accepted, provided that adjacent material retains adequate strength and the localized deterioration does not result in a radical change in cross-section or a general weakening that could act as a notch.

c. Evaluating excessive deterioration. A further consideration must be whether reduced thickness of the local area would allow penetration of the product

envelope from low-energy impacts or abrasion encountered during fleeting or locking operations. The general guide of 25-percent deterioration indicated in NVIC 7-68 applies here. However, there are instances where renewal of hull plate should be required even though deterioration/wastage may be less than 25 percent. An example is heavily or deeply pitted plating areas on vessels which were constructed with less than 3/8" original hull plating. In this case, 25-percent deterioration would mean plating of less than 1/4" as the only barrier between cargo and water. When plating becomes this thin, an evaluation must be made in each case to determine the strength of the hull and its ability to withstand the rigors of routine, unrestricted operations.

---

4. Repair Standards

a. General concerns. The need for renewal of plating is generally evaluated by considering its overall condition.

(1) In the case of tank barges that must withstand frequent fleeting and locking operations, the hull plating is the only barrier between cargo and water. For these barges, the condition of the plate in the way of internal structural supports should be the determining factor. This is the case even when the plating between internals shows negligible wastage.

(2) NVIC 7-68 provides guidance on gauging for evaluation of plate condition and cautions against gauging without sufficient cause. This does not preclude gauging during an inspection to adequately assess the condition of hull plating in the way of internal structural supports. The repeated rubbing of tank barges against lock walls and other barges can leave little evidence of loss of plate thickness in way of internals, and gauging may be necessary to reveal the true condition of such plating.

b. Plate cracking. The rigors of unrestricted river operations generate problems other than thinning of plating. The repeated working of shell plating against lock walls and other barges causes crack initiation and growth in many areas. Frequent handling of tank barges by towboats results in areas that are repeatedly set in by low-energy impacts, resulting in the formation of cracks in plating. Generally, the presence of more than two repaired cracks in one local area should be cause for special attention, as the formation of a subsequent crack in such areas is likely.

c. Repairs of cracked plating. To avoid pollution incidents, cracked plating should be repaired through plate renewal or an insert.

(1) The repair procedures outlined in NVIC 7-68 should be followed when cracks are repaired through welding. Proper edge preparation and full penetration welds are very important.

(2) When repairs involve the renewal of less than a full plate, an insert of less than 18" by l8" normally should not be accepted (see NVIC 7-68). Inspectors must ensure that the edges of the insert lie in line with existing welds or that the corners of the insert have the proper radius.

d. Use of rub bars and doublers. As discussed in NVIC 7-68, doubler plates are unacceptable for permanent repairs of tank barge hulls. However, rub pads or rub bar doublers are often installed in areas where excessive wear of the hull plating is detected or anticipated. When such a doubler is to be installed on an existing single-hulled barge, the hull plating to be covered should be carefully examined to ensure that excessive wastage has not already occurred.

(1) In some cases, older tank barges may have rub pads or rub bars that were installed without adequate evaluation of the hull plating. It may be necessary to remove these to ascertain the suitability of the original hull plating. Where half-round pipe is used as a rub bar, the hull plating beneath is often subject to accelerated corrosion. Gauging from inside the tanks or periodic removal of these bars may be necessary to ensure proper hull plating thickness. Where such rub bars extend across several tanks, the installation of water stops should be considered.

(2) Repairs to internals should generally follow the guidance in NVIC 7-68.

e. Stiffening of internals. On tank barges in river service, the need for repairs to internal structural supports may be questioned because such barges do not normally encounter the stresses of heavy seas and weather conditions and overall hull strength may seem less critical. However, when plating on single-hulled tank barges is not adequately supported, repeated low-energy impacts or excessive stresses from overloading can deform hull plating to the point of failure and result in pollution. Hull plating must always be provided with adequate stiffness to prevent underway panting, and must be able to distribute the force of low-energy impact loading uniformly along the internal structure of the vessel. If the internal structural supports are substantially deformed from original conditions or fail to have the designed amount of contact between support members and hull plating, consideration must be given to requiring renewal.

f. Restrictions on use of clips. The common practice of welding clips to join distorted members to the hull plating cannot be accepted on single-hulled tank barges for extensive repairs to internals. Isolated use of clips may be acceptable if the internals so repaired continue to provide substantially the designed amount of support to the hull plating.

F. STRUCTURAL FAILURES AND CASUALTIES

1. Normal Operating Conditions

It is important to distinguish between structural failures, as defined in the following subparts, and structural damage. Fractures and buckles that result from external forces including collision, allision, grounding, fire, explosion, earthquake, improper cargo handling, or ballasting, (etc) should be reported as marine casualties, not structural failures, if they meet the definitions contained in 46 CFR 4.03. Conversely, fractures or buckles which occur as a result of the natural working of a vessel's hull should not be considered marine casualties.

Because all Class 1 structural failures compromise a vessel's ability to safely operate within its design parameters, they are, by definition, reportable as marine casualties under 46 CFR 4.03. Class 2 and 3 structural failures, as defined, normally fall outside the parameters of the marine casualty definition except in the rare occasion where the cost of a single repair might exceed the monetary value established in 46 CFR 4.03. In any case, the purpose of reporting structural failures is to determine if unwanted trends are developing in particular classes of vessels or vessels which may be operating in a particular environment in order to ensure that appropriate corrective actions are initiated.

2. Classifications and Definitions

a. Definitions.

(1) Outer shell: The side-shell and bottom plating of a vessel, including the bow and stern rakes of barges.

(2) Oil-tight envelope: The portion of the outer shell in way of cargo oil tanks and the vessel's bunker/fuel, lube oil, and slop tanks, exclusive of the clean ballast tanks.

(3) Main strength members: Structural members which provide primary longitudinal strength to the hull and transverse structural members which

directly contribute to support longitudinal strength members. Such members include the strength deck plating; side and bottom plating; tank top plating; the center vertical keel; underdeck, side and bottom longitudinal stiffeners; internal longitudinal bulkheads and stiffeners; deep web frames and girders; transverse bulkheads and girders, and associated bracketing connecting the aforementioned longitudinal and transverse structural members.

(4) Buckle: Any deformation in the outer shell and/or strength deck plating and the adjacent internal main strength members to the extent that structural strength has been lost.

(5) Action: The extent of response an operator must take, with concurrence by the OCMI, for a particular structural failure.

b. Class 1 structural failure:

(1) A Class 1 structure failure is, during normal operating conditions, either--

(a) A visible, through thickness fracture of any length in the oil-tight envelope of the outer shell where threat of pollution is a factor, or;

(b) A fracture or buckle which has weakened a main strength member to the extent that it compromises the vessel's ability to operate safely within its design parameters.

(2) In the case of a Class 1 structure failure, the operator must initiate immediate corrective action with approval of the cognizant OCMI. Temporary repairs may be permitted to allow the vessel to safely transit to a repair facility.

c. Class 2 structural failure:

(1) A Class 2 structure failure is a fracture or buckle within a main strength member which does not compromise the safety of the vessel to operate within its design parameters and does not create a threat of pollution either by location or containment.

(2) In the case of a Class 2 structure failure, the vessel operator and OCMI must evaluate and agree upon the necessary corrective action(s). Temporary repairs may be authorized until the next scheduled repair period.

d. Class 3 structural failure:

(1) A Class 3 structural failure is any fracture or buckle which does not otherwise meet the definition of a Class 1 or 2 structural failure or a fracture which might normally be considered a Class 2 but is determined not to be detrimental to the strength or serviceability of the effected main hull structural member.

(2) Class 3 structural failures do not require corrective action or OCMI notification. Class 3 structural failures must be noted for the record, monitored by the operator if deemed desirable, and addressed at the next regularly scheduled repair period.

---

3. Notification of Class 1 Structural Failures on U.S. Flag Vessels

The following actions must be taken when a Class 1 structural failure occurs on any U.S. documented, non-recreational vessel.

Under no circumstance will a vessel be allowed to operate under the terms and conditions of its Certificate of Inspection until permanent repairs are completed and approved by the OCMI.

Temporary repairs with additional imposed conditions of operations may be authorized by the OCMI to permit the vessel to proceed to a discharge port and/or repair facility.

a. Operator's responsibility. When a Class 1 structural failure is discovered, the vessel operator must immediately report it to the cognizant OCMI of the zone where detected.

(1) The operator must complete and submit Coast Guard Form, Report of Marine Accident, Injury or Death, CG-2692 in accordance with 46 CFR 4.05-10. Class 1 structural failure must always be reported on the Report of Marine Accident, Injury or Death, CG-2692 regardless of when or where the structural failure is found.

(2) The operator must also submit details of the temporary and/or permanent repair procedures to the OCMI and the ABS (or appropriate class society). The repair plan must include a past history of any similar failure, the results of any past analysis related to that type of failure, and the results of past repair actions. Operators of vessels with either Coast Guard Critical Areas Inspection Plans (CAIPS) or ABS Enhanced Survey Programs are advised that submittal of these documents for OCMI review would satisfy this requirement.

(3) If the operator has no history to provide, then a failure analysis is required. The original must be sent to the OCMI with a copy to Commandant (CG-CVC).

(4) Design induced failures on vessels that have had plan approval by the Marine Safety Center (MSC) must be reported to the MSC.

b. OCMI responsibility. The OCMI must advise Commandant (CG-CVC), in conjunction with district (p), immediately after receiving notice of a Class-1 structural failure by the most expeditious means possible. Commandant (CG-CVC) will advise Commandant (CG-5P-TI) of the event.

(1) After regular working hours and on weekends, notification should be made through the National Command Center. If cognizant Commandant (CG-CVC) personnel are unavailable, notification should be made to a Commandant (CG-5P-TI) Traveling Inspector. The OCMI must evaluate the operator's repair proposal.

(2) OCMIs are strongly urged to contact Commandant (CG-5P-TI) for consultation regarding acceptable repair procedures. Commandant (CG-5P-TI) files contain significant information on previously approved repairs which would be beneficial to ensuring consistency across Marine Inspection zones.

---

4. Tank Vessel Restrictions

Operational restrictions may be placed upon tankships pending completion of permanent repairs to their oil-tight envelopes. Such restrictions may include prohibition of carrying cargo in the affected tank(s) in order to allow a vessel to remain in service while in that condition. The vessel operator must submit calculations to the OCMI which demonstrate that the other intact tanks can be loaded without placing additional stress on the hull structure and that the vessel can safely operate with the affected tank either ballasted or empty.

---

5. Vessels with Recurring Structural Failures

A vessel which suffers repeated Class 1 structural failures or a continuous high number of Class 2 structural failures will be placed in a "Special Attention Vessels" category. Vessels not otherwise enrolled in the CAIP program outlined in NVIC 15-91, Change 1 and A5.J of this volume may be required to do so. If the condition of the vessel’s hull structure does not significantly improve, additional operating restrictions regarding route and service may be imposed. In severe cases, the vessel's Certificate of Inspection (COI) may be revoked and the vessel removed from service. Commandant (CG-CVC) maintains

a list of these vessels and they will be regularly attended by a Traveling Inspector. All structural repairs for these vessels must be approved by Commandant (CG-CVC).

---

6. Vessels Enrolled in the Alternative Compliance Program (ACP)

As of February 1995, a pilot program was established to delegate the ABS authority to perform surveys of U.S. flag vessels on behalf of the Coast Guard, pursuant to issuance of a COI. Guidance for this program is contained in NVIC 2-95, Change 2. Unless otherwise provided for in part J of this chapter with respect to the CAIP Program, approval of Class 1 structural repairs lies solely with the ABS unless it is determined through oversight monitoring procedures that the repairs are inadequate. Participation of a vessel in the Alternative Compliance Program (ACP) does not relieve an operator of the responsibility of reporting a Class I structural failure to the cognizant OCMI.

---

7. Documentation of Class 1 Structural Failures

It is rare for two or more types of Class I structural failures to occur during the same event or examination interval. Should this happen, each type must be reported on a separate Report of Marine Accident, Injury or Death, CG-2692. If multiple failures of the same type occur, they may be reported on a single Report of Marine Accident, Injury or Death, CG-2692. At a minimum, the following information should be provided with the Report of Marine Accident, Injury or Death, CG-2692 for each Class I structural failure:

a. A one or two sentence description on the Report of Marine Accident, Injury or Death, CG-2692 noting the location and size of the fracture, affected structural components, how the failure was found and method of repair. It is acceptable to attached a shipyard repair specification or class surveyor's report if they contain this type of information.

b. Photos and/or sketches of the structural failure with identifying marks noting the strake; plate number; frame number; side or bottom longitudinal number; location, i.e., port, starboard or centerline; ship's name and any other useful reference points. Photographs should clearly indicate the originating point of the fracture if it can be visually determined.

c. A description of the structural detail if it is determined that it caused or contributed to the cause of the failure. This should include a description of any similar detail failures which previously occurred in that vessel or sister vessels.

d. Identification of the vessel's trade and principal operating route; time and weather conditions when the failure occurred; and the stability condition of the vessel,

including hull stresses, if available. When the specific time of the failure is not known, a general statement about weather conditions and stability patterns is sufficient.

e. Steel samples must be obtained for analysis and/or nondestructive testing for Class 1 structural failures (not previously analyzed) if the cause of the failure is not due to some obvious or known discontinuity. The vessel operator must arrange for the failure analysis if it will assist in determining the cause of the failure. A copy of the report must be provided to the cognizant OCMI investigating the failure.

f. When accurate information is not available, then the best available data must be reported. This should include information regarding the date when the failure was found, approximate time/date when the failure may have occurred, possible contributing environmental conditions, stability condition of the vessel and any other possibly pertinent information. All such information should be noted as approximate.

---

8. Notification of Class 1 Structural Failures on Foreign Flag Vessels

In addition to the procedures outlined in Paragraph E.3.a, the following items must be adhered to when a Class 1 structural failure occurs to a foreign vessel operating in U.S. waters:

a. The vessel operator or authorized agent must provide a repair proposal to the vessel's flag administration or Recognized Organization (RO) representative and the cognizant OCMI. Repairs are not authorized until approved by the flag Administration or RO.

b. If the class society authorizes temporary repairs, the OCMI will notify the vessel's master and agent that the vessel will not be allowed to return to a U.S. port until permanent repairs are accomplished and approved by the vessel’s flag administration or RO and all outstanding conditions related to the incident are resolved.

c. Under port state control authority, the OCMI may reject flag administration or RO approval of either permanent or temporary repairs if it is determined that they will not restore the vessel to a condition to allow it to operate within its design parameters.

---

9. Notification of Class 2 and Class 3 Structural Failures

Class 2 and Class 3 structural failures as defined in Subparagraph E.2.c of this Chapter do not meet the definition of a marine casualty in 46 CFR 4.03. Therefore, neither failure is required to be reported on Report of Marine Accident, Injury or Death, CG-2692. However, when Class 2 and Class 3 structural failures are detected, the following actions will be taken.

a. Class 2 structural failures. Class 2 structural failures have the potential to become serious through fracture propagation, particularly in a longitudinal strength member that has failed in tension.

(1) Refer to NVIC 15-91, Change 1, which contains important information regarding critical crack length and brittle failure.

(2) When a Class 2 failure is found, it must be reported to the cognizant OCMI even if not found during a scheduled Coast Guard examination.

(3) The operator must submit a repair proposal containing either a temporary or permanent repair. Based on the information presented in the proposal, the OCMI may allow a temporary repair or require immediate permanent repair. In no case will a temporary repair proposal be accepted during a hull examination for credit unless it involves the necessity of the vessel proceeding to another port for permanent repair.

b. Class 3 structural failures. Class 3 failures are not required to be reported to the OCMI if they are found at times other than a credit hull exam. The operator must address all Class 3 failures at each credit hull examination. Based on location, size and type of structural member involved, the OCMI may elect to defer repairs and permit the failure to be monitored at some mutually agreeable interval with the operator, particularly if the repair will set up a hard spot or stress riser making the detail more susceptible to failure.

10. Documentation of Class 2 and 3 Structural Failures

Operators of all vessels which have either a CAIP manual and/or an ABS Enhanced Survey record must enter the types and dispositions of the failures as appropriate and in accordance with the guidelines of part J of this chapter or the ABS Rules pertaining to enhanced surveys. Vessels not required to maintain these records should have such failures recorded in MISLE. The entry should be detailed to sufficiently describe the number and types of failures and where the hard copy of the repair approval is located.

OCMIs are encouraged to contact the Traveling Inspectors regarding repair of Class 2 failures as a means to help ensure consistency throughout marine inspection zones.

11. Relationship Between the OCMI and Class Societies Regarding Repair Approval

Historically, many OCMIs required operators to submit and obtain approved repair plans from the cognizant class society prior to presenting it to the OCMI. While this works successfully in most cases, there have been occasions when OCMIs have had concerns about items they felt were inadequately addressed in the class society approval. Typically, the OCMI waits to review proposed repairs until the cognizant class society has approved the repairs. In order to help ensure a harmonious regulatory position, all OCMIs should review any repair proposal concurrently with their local class society counterparts. This partnership facilitates the repair approval process by forging a unified regulatory review that assures that the acceptance by one party will not be disputed by the other, resulting in untimely delays.

12. Forwarding of Class l Structural Failure Reports

Upon completion of the investigation of a Class 1 structural failure, the OCMI must forward the Report of Marine Accident, Injury or Death, CG-2692 and all supporting attachments to Commandant (CG-INV) for inclusion into the casualty database via the district (p) office.

G. REPORTS OF EQUIPMENT FAILURE ONBOARD INSPECTED VESSELS

Whenever approved systems, items of approved equipment (systems or items approved under an approval number), or non-approved systems fail and a dangerous condition results, Report of Equipment Failure on Inspected Vessel, CG-2752A, must be submitted. This report is only to indicate failures, not to report replacements due to normal wear or deterioration. All steering gear failures must be reported in as much detail as possible.

H. NFPA CERTIFIED MARINE CHEMISTS

1. Requirements for Inspections Prior to Hot Work

The following regulations require an inspection to be made before alterations, repairs, or operations involving hot work are undertaken within cargo tanks used to carry flammable and combustible liquids or chemicals in bulk or on their boundaries, fuel tanks and their boundaries, piping, and equipment connected to cargo or fuel tanks:

TYPE	CFR CITATION
Tank Vessels	46 CFR 35.01
Passenger Vessels	46 CFR 71.60
Cargo and Miscellaneous Vessels	46 CFR 91.50
Public Nautical School Ships	46 CFR 167.30
Oceanographic Research Vessels	46 CFR 189.50
Mobile Offshore Drilling Units (MODUs)	46 CFR 109.573

2. Requirement for a Marine Chemist

In the United States or its territories and possessions, inspections preceding hot work must be made by a marine chemist certified by the National Fire Protection Association (NFPA). For a list of certified chemists, see the annual NFPA Marine Chemists Directory.

When no marine chemist is reasonably available, the regulations provide for the OCMI to select and authorize another person to perform the required inspections (see Subpart I.7 of this Chapter). When the vessel is not in the United States and no marine chemist or other person authorized by the OCMI is reasonably available, the regulations require the inspection to be made by the senior vessel officer present and properly noted in the vessel's logbook.

NOTE: It is unsafe to conduct an Internal Structural Examination (ISE) while a vessel is loading/discharging, even when the space is certified by a Marine Chemist. Due to the potential for changing conditions which would create a hazardous environment, the ISE must not be performed under these conditions.

3. Functions of the Marine Chemist

The Marine Chemist will--

a. Conduct a physical inspection and test the condition of tanks and spaces;

b. Determine what previous cargoes were carried;

c. Check calibration of instruments before and after each day's use; and

d. Test spaces for oxygen (19.5 percent minimum), combustible gases (must be below 10 percent Lower Explosive Limit (LEL)), and toxic substances (minimum by Threshold Limit Values (TLVs)). TLVs are published in the latest edition of the booklet, "Threshold Limit Values for Chemical Substances and Physical Agents in the Workroom Environment." This is published by the American Conference of Governmental Industrial Hygienists.

NOTE: For additional information concerning toxic vapor hazards in confined spaces, see MSM Volume I, Administration amd Management, COMDTINST M16000.6 (series), Chapter 10.

---

4. Marine Chemist Certification

The marine chemist must complete and sign a marine chemist certificate indicating the compartment is "safe for workers" and "safe for hot work" before hot work begins.

A signature of receipt is required from the owner, employer, or shipyard representative responsible for posting the certificate and maintaining the conditions it requires.

The certificate also states conditions under which the marine chemist should be consulted or recalled.

Unsigned marine chemist certificates are invalid. The marine chemist notes the results of his or her inspection on the certificate, as well as any conditions that must be maintained by the competent person, including--

a. Frequency and types of additional tests;

b. Further inspections;

c. Qualifications, and;

d. Other pertinent instructions.

---

5. Standards for Marine Chemist Activities

The publication "Control of Gas Hazards on Vessels," NFPA 306 (latest edition), is the guide for the inspections required and certificates issued before alterations, repairs, or operations as described above are performed. Inspection personnel should become familiar with the provisions of NFPA 306 and the procedures that the marine chemist must follow to issue a marine chemist certificate, as well as additional requirements for bulk chemical cargo tanks and Flammable Cryogenic Liquid (FCL) carriers.

---

6. Competent Person

a. Introduction. OCMIs should become familiar with the OSHA requirements in 29 CFR 1915.12 concerning flammable and oxygen-deficient atmospheres and tests conducted by competent persons. This designation is a creation of the OSHA regulations (29 CFR 1915), by which certain functions related to ship repair, shipbuilding, and shipbreaking are performed. A competent person is generally defined in the OSHA regulations as a person capable of recognizing and evaluating employee exposure to hazardous substances and other unsafe conditions. The competent person is also capable of specifying necessary protection and precautions to be taken to ensure the safety of employees required by the particular regulation to which the condition applies.

b. Functions. The competent person is responsible to his or her employer. One or more such persons are required to be designated by employers when working conditions in a shipyard involve flammable atmospheres. If a certified NFPA marine chemist performs the duties of the competent person in addition to the duties of the marine chemist, that fact must be recorded. The competent person's duties generally involve--

(1) Determining oxygen content in tanks or spaces prior to workers' entry;

(2) Determining concentrations of flammable vapors or gases in cargo tanks and other spaces having contained flammable or combustible liquids or gases prior to entry by workers;

(3) Maintaining safe conditions relating to cleaning and cold work in tanks and spaces having contained combustible or flammable liquids or gases;

(4) Determining concentrations of flammable vapors or gases in areas not requiring a marine chemist certificate prior to hot work;

(5) Maintaining, receipting for, and posting marine chemist certificates and appropriate warning signs;

(6) Maintaining and testing conditions in tanks and spaces after certification is issued by a marine chemist; and

(7) Maintaining a log of inspections, tests, operations performed, and any instructions from the marine chemist.

NOTE: Qualifications for a competent person include knowledge and application of protective equipment and devices to minimize hazards from coatings and residues, fire watches, fire extinguishers, charged hoses, fresh air breathing apparatus, air purifying respirators, etc.

NOTE: In spaces where toxic atmospheres or residues may be present, only a marine chemist, industrial hygienist, or other person similarly qualified to recognize and test for toxic substances must be authorized to conduct the required pre-entry tests and inspections.

c. Interaction with the marine chemist. The competent person accompanies the marine chemist through the vessel while the latter conducts the tests and inspections necessary to certify tanks as safe. The competent person normally conducts a tour of all operations at least once every 24 hours and usually more often, depending on the type of work in progress. The marine chemist is not required to conduct follow-up inspections and tests unless recalled or unless conditions affecting issuance of certificates change (e.g., opening additional tanks, transferring oil, changes in atmospheric conditions of tanks).

d. Interaction with the Coast Guard. In summary, the competent person is charged with carrying out the responsibilities of the employer in meeting the provisions of the marine chemist certificate and additional requirements of the OSHA regulations. The OCMI's role in this process should be--

(1) Awareness of the OSHA and Coast Guard regulations relating to shipyard operations;

(2) Awareness of the employer's responsibility to follow OSHA and Coast Guard requirements;

(3) Identification of those instances when existing regulatory requirements are not being followed, either by the competent person or the marine chemist;

(4) Reporting violations of regulations and unsafe practices to OSHA Regional Directors (concerning competent persons) or to Commandant (MSC) (concerning marine chemists); and

(5) Dialogue with local marine chemists, OSHA officials, and shipyard employers to gain more insight into how competent persons and marine chemists operate, and to resolve problems of mutual concern.

---

7. Substitutes for Marine Chemists

a. Introduction. Under the regulations, the OCMI may be called upon to authorize another person to perform required inspections when it is claimed that the services of marine chemists are not reasonably available. The OCMI should consider each case on its own merits, considering the usual availability of marine chemists within reasonable distances, the impact on the vessel of delays in securing marine chemists, the nature of the cargo that the vessel previously carried, etc.

b. Restrictions. If it is necessary to authorize another person to perform a marine chemist's functions, the OCMI should give the greatest consideration to persons with long practical experience in the repair of vessels, rather than those versed in theory alone. An authorized substitute for a marine chemist is limited by the regulations to act only in the case of an individual vessel. Blanket authorizations for a person to act in lieu of a marine chemist are prohibited.

c. Authorization procedures. Authorization for persons to act in lieu of a marine chemist must be made in writing. The names of persons making such recommendations, the person(s) recommended and their credentials, the name of the vessel being examined, the shipyard or repair point, and the date of recommendation must be indicated. Copies of such authorizations must be kept in a separate file marked "Marine Chemists - Authorized Substitutes For." From time to time, the OCMI may be asked to report on such authorizations to determine which areas require additional marine chemists.

---

8. Certification Standards

The NFPA certifies each person found to be a competent marine chemist to carry out the requirements in NFPA-306. An NFPA-appointed qualification board of five members examines each marine chemist application to determine whether the applicant fulfils all requirements set forth in Appendix A of the current Marine Chemists Directory. Each marine chemist must re-qualify every 5 years by completing additional training and educational requirements to ensure that he or she remains abreast of changing technology. The Coast Guard and OSHA provide nonvoting liaison officers to the qualification board who address their agencies' policies and problem areas. The Coast Guard liaison officer relays comments from field units regarding individual marine chemist performances to the board.

9. Types of Certificates

The NFPA only issues one type of certificate. This unlimited certificate certifies that the holder is competent to discharge all duties of a marine chemist in accordance with NFPA 306, on vessels of all types and sizes except FCL carriers. A special FCL carrier endorsement on the marine chemist certificate (license) is necessary before a marine chemist is authorized to issue marine chemist (gas-free) certificates for such vessels.

I. REPAIRS AND ALTERATIONS TO MARINE ENGINEERING EQUIPMENT

1. Introduction

The requirements in 46 CFR Part 59 apply to the repair of all boilers, appurtenances, and pressure vessels subject to inspection by the Coast Guard.

Repairs, replacements, and alterations must not be made without prior approval by the OCMI except in an emergency. The submittal of plans and specifications for approval may be required as specified in 46 CFR 59.01-5.

2. Tailshaft Repairs

The Coast Guard will accept welded repairs to tailshafts used on ABS-classed vessels when they meet ABS requirements or other authorized classification society for vessels enrolled in ACP. When possible, repairs and tests to such shafts should be witnessed by a Coast Guard inspector. The inspector must verify that the work was performed by a welder qualified or certified by the Coast Guard, the U.S. Navy, or ABS, and that the

welding repair is satisfactory. The ABS Guide for Repair, Welding, Cladding and Straightening of Tail Shafts details the procedures for repairing cracked steel shafts by welding. This guide also contains the requirements that must be passed prior to qualification to repair cracked or corroded shafting by welding. In the case of unclassed vessels, the inspector should use these recommended procedures as a guide in determining whether a satisfactory repair has been made.

J. CONVERSION OF LANDING SHIPS, TANK (LSTS)

NVIC 7-56, "Manned LST's; structural reinforcement and drydocking hull inspection requirements," contains instructions for the structural reinforcement of landing ships, tank (LSTs) being converted for manned commercial operation in ocean, coastwise, or Great Lakes service, and for the inspection of these vessels after conversion. NVIC 11-63, "LST's as Unmanned Barges; structural reinforcement and drydocking hull inspection requirements," contains the requirements for LSTs converted for use as unmanned barges (See MSM Volume II, Material Inspection, COMDTINST M16000.7A (series), Chapter B5).

K. CRITICAL AREAS INSPECTION PLANS (CAIPS)

1. Use of CAIPs

NVICs 15-91 and 15-91, Change 1 established guidance concerning the implementation and use of Critical Area Inspection Plans (CAIPs). CAIPs may be applied to any vessel or class of vessel based on evidence of repetitive and significant structural failures. The purpose of the CAIP is to identify, track, and document the history of a vessel's structure, including the means and methods employed to mitigate structural failures through modification of substandard design and construction details. The CAIP should be a living document. As a vessel ages, it is reasonable to expect that new and/or more frequent failures of the hull girder will occur due to fatigue caused by a variety of factors. These could include repetitive cyclical loading in a seaway, stresses imposed by environmental factors, operational conditions such as route, speed and cargo operations and type of service. In this manner, causes of structural failures are addressed and permanently corrected. This eliminates the potential for performing in effect a temporary repair of a fracture or defective which immediately addresses the symptom, but does not hold up in service.

2. Use of CAIPs by Inspectors

Periodic updating of the CAIP ensures that the latest and best information about the hull structure is available to inspectors attending the vessel. All inspectors assigned to hull examinations of CAIP vessels must review the CAIP manual prior to commencing the inspection. This is particularly important for new inspectors with limited hull/structural experience, as the information directs attention to areas highly susceptible for failure, provides detailed information on previously approved repair procedures which aid in evaluating a current repair proposal, and ensures a consistent regulatory approach. Inspectors are cautioned that, although the CAIP is an excellent road map for detecting fractures, the remainder of the vessel must be carefully examined as unexpected fractures, potentially indicative of new trends, could have occurred since the last examination interval.

---

3. Establishing CAIP Requirements

As outlined in NVIC 15-91, the following implementation procedures apply:

a. Commandant (CG-CVC) is the implementing authority for CAIPs on vessels operating in multiple OCMI zones. This is based on review of Class 1 structural failure casualty data, MISLE sorts on Class 2 structural failure entries and Traveling Inspectors' reports.

b. The cognizant OCMI is authorized to establish CAIPs for vessels that operate solely within that OCMI's zone. The OCMI must notify the district and Commandant (CG-CVC) of the CAIP initiation.

c. G-MOC maintains a list of all vessels required to have CAIPS. This will be available in an MSIS VFSC product. As of June 1996, all tankers engaged in the Trans Alaskan Pipeline Service (TAPS) trade, including all vessels engaged in the export of oil from Valdez, Alaska to a foreign destination, are required to maintain CAIPS.

---

4. Operator Responsibilities

When a vessel or class of vessels is designated by Commandant (CG-CVC) for the CAIP Program, the vessel operators must do the following:

a. Develop a CAIP in accordance with the performance elements of Enclosure (2) to NVIC 15-91. Format of the CAIP is left to the operator's discretion as long as all of the performance criteria is included in the document.

b. Submit the CAIP to the vessel's classification society for review and approval.

c. Upon classification-society approval, forward a copy of the approval letter to Commandant (CG-CVC). Submittal of the CAIP itself is not required.

---

5. CAIP Surveys

All CAIP surveys are the responsibility of the vessel operator. Coast Guard inspectors are not required to be present during the surveys but OCMIs are strongly urged to assign inspectors because of the tremendous training opportunities afforded by these inspections. Vessel operators often employ highly experienced structural experts to examine and evaluate the vessel's internal structure. These individuals are generally also responsible for drafting repair proposals. Inexperienced inspectors can gain important experience pertaining to structural assessment through association with steel surveyors. The following guidelines must be followed:

a. Notice of a CAIP survey should be given to the cognizant OCMI at least 15 days in advance.

b. If Coast Guard inspectors will attend, the operator should present the extent and schedule of the exam to the cognizant OCMI. OCMIs are encouraged to contact the Traveling Inspectors Commandant (CG-5P-TI) to discuss upcoming surveys. The Traveling Inspectors have extensive records of many past CAIPs that would be helpful to the marine inspector.

c. The CAIP must be conducted by an individual who is qualified to conduct structural examinations. This individual may be a class surveyor, a surveyor who has been certified by a classification society, or an experienced surveyor who can provide documentation of his/her qualifications to the OCMI. Port engineers and/or ship's officers may be employed if the operator attests in writing to their qualifications. CAIPs conducted by unqualified individuals will not be accepted.

d. Cleanliness of the internal structure is paramount to the quality of the CAIP survey. Cleanliness is a subjective term. However, as a minimum, critical and active repair areas should be--

(1) Sufficiently free of standing water, particularly around bottom shell master erection butts and weld wraps of mushroom or rat-hole cutouts of bottom shell longitudinals;

(2) Sufficiently free of sludge and mud;

(3) Sufficiently free of wax build up and loose scale, and;

(4) Cleaned to prevent soft coatings, if applied, so as to prevent or hinder fracture detection.

(5) If the CAIP surveyor has any doubt about the cleanliness of the internal structure, further butterworthing, water-washing, and/or stripping must be conducted.

e. Surveys may be completed by any of the following methods--

(1) Rafting;

(2) Staging, or;

(3) Other techniques that apply latest and best technology, such as high resolution cameras suspended in tanks, which result in satisfactory close-up examination of the vessel structure and are acceptable to the OCMI. Ideally, any of the physical methods employed should permit the surveyor or inspector to be no more than 10 feet from any structural component within the critical area defined by the CAIP.

f. Upon completion of the CAIP survey, the operator must prepare a survey report for entry into the CAIP manual. One copy must be entered into the manual aboard the vessel and another must be forwarded to the cognizant OCMI for review. The operator must provide an executive summary of the report to G-MOC. This summary should be brief. It must only contain types and numbers of the various classes of structural failures noted and if these failures were in existing or new active repair areas. It is expected that these documents be prepared and forwarded within 60 days of the CAIP survey.

---

6. OCMI Responsibilities and Guidance

The cognizant OCMI must ensure that the following items are adhered to:

a. OCMIs must instruct their inspectors to review the CAIP at each drydock exam and inspection for certification to verify that the plan is updated and the required surveys have been performed.

b. When resources permit, inspectors should participate in CAIP surveys. It can not be stressed enough what an extremely valuable training opportunity a CAIP is to first tour inspectors. Attending inspectors should monitor the survey and assess its overall quality and completeness.

c. When OCMIs are advised of fractures, they must require and monitor repairs as required by Subpart E.2 of this Chapter.

d. OCMIs should conduct a thorough review of CAIP reports to determine if the periodic information from NVIC 15-91 is provided. The following areas should be of particular interest:

(1) Scope of the survey.

(2) Qualifications of the surveyor.

(3) Fractures reported as required.

(4) Repair proposals submitted by the operator are acceptable within the established guidelines. Repair procedures specifically to TAPS tankers can be found in MSM Volume II, Material Inspection, COMDTINST 16000.7A (series), Chapter B4.

e. CAIPs provide a historical record of the vessel's structural failure and repair history.

(1) This history should be employed to evaluate current repair proposals. If certain construction details or prior repairs continue to fail, repairs in kind should not be authorized.

(2) OCMIs must notify operators of their responsibility to improve the deficient detail(s) and work in conjunction with the operator and vessel's class society to mitigate reoccurrence. Conversely, OCMIs and attending surveyors should recognize the effectiveness of prior repairs and design modifications and accept current repairs done in accordance with these procedures. This supports consistency across OCMI zones.

f. When Class 1 fractures occur, OCMIs must require a failure analysis or non-destructive testing of steel samples in accordance with Subparagraph E.7.e of this Chapter. The CAIP process was developed to analyze structural failures and prevent or mitigate their recurrence. Such analysis is vital to this effort.

g. A history of recurring structural failures combined with an operator's reluctance to develop a permanent solution to their cause is sufficient grounds for the OCMI to recommend to Commandant (CG-CVC), via the cognizant district (p), that a vessel be restricted from a particular trade, or, removed entirely from service. This is a complex process that requires several levels of review. However,

nothing is intended to limit the OCMI's authority to remove a vessel's COI if it is determined that the vessel cannot safely operate within its design parameters.

h. After review of the CAIP survey report, the OCMI must ensure that the proper CAIP survey information is entered into MSIS.

i. Vessels in the ACP. Several vessels required to maintain CAIPs have been accepted into ACP.

(1) These vessels are inspected by the ACP class society on behalf of the Coast Guard and are subject to oversight only.

(2) All oceangoing tankships classed by the ABS are required to follow Enhanced Survey guidelines in addition to normal survey requirements. The Enhanced Survey requirements closely parallel CAIP standards and are deemed equivalent as permitted by NVIC 15-91, Change 1, for the normal twice in 5-year drydock interval.

(3) The Enhanced Survey guidelines do not specify any annual survey requirements. Thus, strictly adopting the ABS guidelines for Enhanced Survey causes the operator to not comply with the Coast Guard standards if the vessel is subject to an annual CAIP requirement.

(4) When overseeing these vessels, the OCMI must determine that the vessel has completed an annual CAIP to NVIC 15-91, or, that the Enhanced Survey guidelines have been formally extended by ABS to the annual interval and that the required surveys have been performed. Failure to conduct either examination within the prescribed interval will cause the vessel to be removed from service until done and possible civil penalty procedures initiated against the operator.

CHAPTER 6: MISCELLANEOUS VESSEL INSPECTION ACTIVITIES

A. INTRODUCTION

This chapter discusses vessel inspections other than drydocking, annual and periodic inspections that are related to, but do not necessarily occur at the same time as, inspections for certification.

B. PERMISSION TO PROCEED FOR REPAIRS ONLY

1. Authority

Under 46 U.S.C. 3313, repairs may be deferred (when it can be done safely) until a vessel reaches a port where repairs may more conveniently be done. The regulations applicable to issuance of permits to proceed are:

VESSEL TYPE	CITATION
Procedures Applicable to the Public	46 CFR 2.01-15
Tank Vessels	46 CFR 31.10-35
Passenger Vessels	46 CFR 71.05
Cargo and Miscellaneous Vessels	46 CFR 91.05
Public Nautical School Ships	46 CFR 167.30-5
Small Passenger Vessels	46 CFR 176.202 (Sub T) 46 CFR 115.202 (Sub K)
Oceanographic Research Vessels	46 CFR 189.05

2. Permit to Proceed to Another Port for Repairs, Form CG-948

a. Upon request of the vessel owner or operator and under certain conditions the Officer in Charge, Marine Inspection (OCMI) may issue a Permit to Proceed to Another Port For Repairs, CG-948, to a vessel.

(1) This permit is a substitute for the Certificate of Inspection (COI). The permit must be issued only when the OCMI judges that the vessel may proceed safely.

(2) When the a Permit to Proceed to Another Port for Repairs, CG-948, is issued, the OCMI must withdraw the COI and all amendments thereto and forward them to the OCMI of the zone to which the vessel will proceed.

(3) A Permit to Proceed to Another Port for Repairs, CG-948, must not be issued to a vessel that is eligible to retain its COI, nor to which an amendment to the COI would suffice.

b. Restrictions. A Permit to Proceed to Another Port for Repairs, CG-948 allows a vessel to voyage from one port to intermediate ports along a route to its port of destination. However, the vessel may not voyage to several ports and return to the original port or voyage from a port in the continental United States to a port outside the continental United States and then return. If the vessel's COI has expired or is about to expire, the OCMI may issue a Permit to Proceed to the port of final discharge, provided an inspection for certification has been conducted to the point where the OCMI considers it safe for the vessel to proceed and load or discharge cargo. The inspection may be continued at other ports and may be concluded at the port of destination. In such case, appropriate transfer of inspection records among OCMIs will be conducted.

c. Conditions of operation. Every Permit to Proceed should be worded to expire when the vessel reaches its port of destination. Additional information regarding the purpose for making the voyage, the nature and extent of necessary repairs, special conditions to be observed, modifications in crew or equipment requirements, and whether or not the vessel may carry passengers or cargo, must be set forth clearly on the permit. A Permit to Proceed may be renewed or extended by the OCMI with jurisdiction over the vessel.

3. Pre-Issue Inspection

Issuance of a Permit to Proceed to Another Port for Repairs, CG-948, is contingent upon Coast Guard inspection to determine that the proposed voyage can be conducted safely. The scope and extent of the inspection must vary according to the circumstances, and must be determined ultimately by the OCMI.

4. T-Boats Proceeding for Repairs

When not carrying passengers, vessels inspected under 46 CFR Subchapter T may proceed to another port for repairs without obtaining this form. This is permitted because a small passenger vessel need not operate under the terms of its COI when passengers are not carried.

C. Sanitary Inspections

1. Authority

The statutory authority for sanitary examinations on vessels is found in 46 U.S.C. 33-08. The regulations establishing requirements for sanitary inspections are:

VESSEL TYPE	CITATION
Tank Vessels	46 CFR 31.10-45 and 35.01-5
Passenger Vessels	46 CFR 71.45
Cargo and Miscellaneous Vessels	46 CFR 91.35
Nautical School Ships	46 CFR 168.15-60
Small Passenger Vessels	46 CFR 176.818 (Sub T) 46 CFR 115.818 (Sub K)
Oceanographic Research Vessels	46 CFR 189.33

2. Inspection Procedures

a. Scope of inspection. Coast Guard sanitary inspections concern design, construction, and arrangement of tanks, crews' quarters, galleys, and similar spaces.

(1) Sanitary inspections begin with plan approval prior to construction, alterations, or conversions.

(2) Aspects of sanitary concern include accommodation spaces, ventilation, plumbing, lighting, heating, control and location of overboard discharges, venting of fresh water tanks, installation of hot and cold water in hospital spaces, provisions against fresh water piping running through oil tanks (because of possible contamination), installation of proper drains in waste disposal systems and low points in piping systems, and the installation of insect screens and similar items where required.

b. Sanitary inspections of crew’s accommodations. Accommodations, including washrooms, messrooms, galleys, and storerooms, must be examined for sanitary conditions. The marine inspector must be satisfied that quarters are of the dimensions required, properly ventilated and in a clean and sanitary condition, and equipped with the proper plumbing and mechanical appliances required, and that such appliances are in good working order.

c. Frequency of inspections. Sanitation on inspected vessels is generally the responsibility of the master and the chief engineer. Coast Guard inspection

personnel should restrict the number of sanitary inspections to the minimum compatible with statutory and regulatory requirements.

(1) A sanitary inspection must be held during each inspection for certification, annual inspection, periodic inspection, drydocking, and such other times as provided for by statutes and regulations.

(2) Sanitary inspections of T-boats must be held as the OCMI deems necessary; normally, they must coincide with COI and annual inspections.

(3) Inspectors must be alert to unsanitary conditions at all inspections.

---

3. Unsanitary Conditions

a. Documentation. If a suspected unsanitary condition is discovered, the inspector should take appropriate action to document the condition. The local Coast Guard unit should request assistance of the Food and Drug Administration (FDA) and/or the Public Health Service (PHS), Centers for Disease Control (CDC). These agencies are able to provide a detailed sanitation analysis, such as detecting the presence of bacteria in food or on food processing equipment. The results of the inspection should include detailed, verified, technical information upon which the Captain of the Port (COTP) can initiate enforcement action. These agencies may be contacted at the following addresses:

U.S. Public Health Service
Office of the Chief
P.O. Box DO, CPS, CDC
1015 North American Way, Rm 107
Miami, Florida 33132-2017
Ph: (305) 536-4307

Quarantine Station
U.S. Public Health Service
P. O. Box 90834
Los Angeles, California 90009
Ph: (213) 215-2365

Centers for Disease Control
Center for Prevention Services
Division of Quarantine
Atlanta, Georgia 30333
Ph: (404) 329-2574

U.S. Food and Drug Administration
50 U.N. Plaza
Federal Office Building
San Francisco, California 94102
Ph: (415) 556-0439

NOTE: The CDC has published an Operations Manual which describes their Vessel Sanitation Program. Coast Guard units may request a copy of the manual by contacting the CDC at the Miami or Atlanta addresses listed above.

b. Enforcement. If the unsatisfactory sanitary condition is of such a nature or magnitude that the district commander or COTP could reasonably determine, based on the detailed results of the inspections conducted by either the FDA or the PHS, that a clear threat to the vessel, crew, passengers or safety exists, enforcement action may be taken under Title 33 CFR 160.111(c). Enforcement action on foreign flag vessels initiated under U.S. law or under the provision of the International Labor Organization Convention Concerning Minimum Standards in Merchant Ships (ILO 147) must be reported in accordance with Enforcement of the ILO 147, COMDTINST M16711.12, (series).

D. TRAVELING INSPECTION STAFF (CG-5P-TI)

1. Introduction

The traveling inspection staff conducts and monitors various inspections and examinations of vessels of particular interest and provides oversight of field missions with feedback directly to Commandant (CG-5P). The staff also conducts special missions and studies in support of inter-division issues to improve commercial vessel safety and increase awareness of marine safety. The vessels targeted for attention by this staff vary based on the priorities the Director of Prevention Policy (CG-5P). Examples of targeted vessels are U.S. deep draft vessels over 20 years of age, Trans-Alaska Pipeline Service (TAPS) tankers, large passenger vessels (over 100 GT), U.S. vessels of novel build or design, and U.S. vessels undergoing major conversions, modifications, or life extensions and ACP enrolled vessels.

2. Purpose

Traveling Inspectors perform oversight of targeted vessels and conduct special studies to provide sound technical advice and recommendations to Commandant (CG-5P) which help form program direction and measure the effectiveness of existing programs and policies. Unit Commanding Officers may request advice or assistance from this specialized and highly experienced staff on issues of particular concern.

3. Interaction with Field Units

In most cases, a representative of the cognizant field command should accompany the Traveling Inspector at each vessel inspection. Traveling Inspectors do not issue marine inspection deficiency requirements Vessel/Facility Inspection Requirements, CG-835s; however, they may make recommendations for Vessel/Facility Inspection Requirements, CG-835s to the cognizant OCMI/COTP. Special inspection reports will be submitted by the Traveling Inspector to Commandant (CG-5P). Recommendations that the Traveling Inspector may offer include an action addressee, generally a program manager or Headquarters Division Chief, who will coordinate any necessary district or field unit action. Copies of special inspection reports must be forwarded by the traveling inspection staff to appropriate districts and field units after approval by Commandant (CG-5P).

E. EXEMPTIONS FOR LAID UP, DISMANTLED, OR OUT-OF-COMMISSION VESSELS

Under 46 U.S.C. 3302(e), vessels subject to the vessel inspection laws are exempted from inspection when they are laid up, dismantled, or otherwise out of commission. Under 46 CFR 31.01-1, 70.05-1(a)(2), and 90.05-1(a)(3), tank, passenger, cargo and miscellaneous vessels need not possess a COI when in such condition.

CHAPTER 1: INSPECTION OF VESSELS FOR CERTIFICATION

A. INTRODUCTION

This chapter of the Marine Safety Manual (MSM) provides guidance regarding inspections for the issuance of a Certificate of Inspection (COI), as well as information concerning various decisions and interpretations of regulations. This guidance is supplemented by references to other sections of the MSM, which have additional information. The responsibilities of the Officer in Charge, Marine Inspection (OCMI) and inspection personnel are discussed in the MSM, Volume I, Administration and Management, COMDTINST M16000.6 (series).

B. CERTIFICATION OF VESSELS

1. General Provisions

46 U.S.C. Chapter 33 requires that certain vessels possess a COI. The issuance of a COI depends on the vessel's satisfactory completion of an inspection for certification. A vessel's retention of the COI depends on the continued maintenance of the vessel in a safe operating condition. When satisfied that the vessel in question complies with all applicable statutes and regulations and can be operated safely without endangering life or property, the OCMI is authorized to issue a Permanent COI of a Temporary COI, Form CG-854, pending issuance of the permanent COI. Both permanent and temporary COIs are generated by the Marine Information for Safety and Law Enforcement (MISLE) database.

NOTE: The initial COI may be completed before issuance of the Certification of Document (COD). The COI should be issued, provided the National Vessel Documentation Center (NVCD) has received the application for documentation.

Contact the NVCD about vessel documentation questions.

a. Government owned vessels. Government owned vessels may be subject to maritime and environmental safety laws. To determine if a regulation applies to government vessels, one should check the applicability sections of the applicable CFR subchapter.

b. Jones Act requirements for coastwise U.S. trade. Vessels engaged in coastwise or Great Lakes trade must be U.S.-built vessels. For a vessel to be considered a U.S.-built vessel, it must have been constructed totally within the United States. This includes fabricated structural vessel components; there is no allowance for fabrication of even a small portion of major components outside of the United States.

NOTE: Construction materials that are otherwise processed per detailed instructions so as to permit simplified assembly with nominal preparation will normally be considered fabricated.

---

2. Periods of Validity

a. Introduction. The periods of validity for a COI vary by vessel type and are specified within the applicable regulations. In general, they are as follows:

(1) 1 year for passenger vessels on all routes, small passenger vessels that engage on international voyages, Nautical School Ships, and nuclear powered vessels.

(2) 5 years for cargo, tank, oceanographic research, small passenger vessels engaged exclusively on domestic voyages, and miscellaneous vessels.

b. COIs are normally issued for the maximum period specified in the applicable regulations. A vessel is certificated on its ability to meet the minimum safety standards set forth in the regulations. Under existing law, any vessel that meets these standards is entitled to a full-term COI.

c. A vessel that is unable to meet the minimum standards must correct its deficiencies prior to certification or, if the deficiencies are minor and do not make operation of the vessel unsafe, be granted reasonable time in which to make the necessary corrections.

d. An owner may surrender the COI and apply for inspection for recertification at any time prior to the expiration date.

e. The conditions under which certain vessels on foreign voyages may return to the United States with expired certificates are discussed in Paragraph C.7 of this chapter.

f. Vessels with expired COIs. A vessel with a COI that has lapsed, regardless of circumstances or reasons, may be required to undergo inspection for certification as a new vessel if the owner/operator desires to place the vessel back into certificated service.

(1) The cognizant OCMI will make a determination as to the type and extent of inspection requirements appropriate after giving due consideration to the circumstances behind the vessel's out-of-service period.

(2) When making this the determination, the OCMI must closely evaluate environmental conditions such as operations in fresh water, salt water, or drydock lay-up as well as any structural modifications made to the vessel.

g. Grandfathering. The OCMI may, at his or her discretion, require a formerly certificated vessel to be inspected as a new vessel regardless of its former status as a certificated vessel. Such vessels would no longer be afforded exemption from regulatory requirements under grandfather provisions provided by law, regulation, or policy.

h. A vessel that was once certificated does not qualify indefinitely as an "existing" vessel, especially when it has been structurally modified and/or out of service for an extended period. A vessel whose COI has lapsed will be required to meet those inspection for certification requirements determined to be appropriate by the issuing authority—the OCMI.

i. 1-year certificates. Regulations permit the issuance of certificates to certain cargo, tank, and miscellaneous vessels for periods of less than 2 years. Examples are 1-year certificates for--

(1) Vessels equipped with firetube main propulsion boilers, including riveted lap seam boilers;

(2) Vessels that, in the OCMI's opinion, should be inspected on a 1-year basis by reason of route (the Commandant's approval must be obtained in these cases); and

(3) Nuclear powered vessels.

---

3. Entries on COIs

a. Number of passengers stated. Except for ferryboats, the OCMI is responsible for determining the number of passengers that a vessel has accommodations for and can carry with prudence and safety, as provided for in 46 U.S.C. 3501. That number must be stated on the COI. The OCMI must not permit the number of passengers allowed to exceed that permitted by law or regulation, or specified in the vessel's stability letter.

b. Maximum number of passengers on ferry vessels. See 46 U.S.C. 451, Notes of Decisions, for guidance on how to compute and list the number of passengers and

crew on the COI for ferry vessels. 46 U.S.C. 451 notes that "…respecting the number of passengers that may lawfully be carried by a passenger steamer, [46 U.S.C. 452 and 453] have no application to a ferryboat, though temporarily employed as an excursion boat."

(1) Essentially, 46 U.S.C. 451 considers ferry vessels to be cargo vessels, not passenger vessels. Accordingly, the number of passengers and crew authorized on a ferry vessel is not required to be listed on the COI.

(2) However, many ferry vessels are a combination of both cargo and passenger vessels. As such, when the OCMI and the owner of a ferry vessel agree on the number of passengers that can be carried safely, and when the owner of the ferry desires it, the maximum number of passengers permitted may be entered on the COI.

c. Tankships carrying grain cargo. No COI amendment is necessary for a tankship to carry grain cargo. The Federal Grain Inspection Service provides inspectors to oversee loading of vessels with grain.

NOTE: When stability is a factor in limiting the maximum number of persons that can be carried with safety on any ferry vessel, the total number of persons permitted aboard must be stated in the stability letter.

---

4. Temporary COIs

A Temporary COI, Form CG-854, provides evidence of the satisfactory completion of an inspection for certification (see 46 U.S.C. 3309). It stands in lieu of a COI and, until replaced by a COI, has all the force and effect of the permanent certificate. The temporary certificate is intended for use when the immediate issuance of a COI is not possible at the completion of an inspection. It is not the Commandant's intention that a COI should be withheld pending correction of minor deficiencies after a temporary certificate has been issued. Further, when the permanent COI can be issued in time to meet the vessel's needs, a temporary certificate should not be issued.

---

5. Seasonal Restrictions

Seasonal limitations are intended to ensure the overall seaworthiness of the vessel and the safety of the passengers carried under differing operational conditions, without completely halting the operation of the vessel during any specific period of time. COI statements of seasonal restrictions must be as descriptive as possible, showing limitations on vessel routes, the scope of passengers carrying authorizations, and the like.

---

6. Certificates Expiring at Sea

a. COI extensions. There are no statutory provisions that allow for the extension of a COI. Accordingly, requests for extensions of certificates must be denied.

b. Expirations of COIs during foreign voyages. Under 46 U.S.C. 3314, a vessel may complete a foreign voyage to a port of the United States within 30 days of the expiration of its COI without incurring penalties for operating without a valid certificate.

(1) The vessel owner/operator must apply for an inspection for certification at the first U.S. port of call.

(2) The vessel must then complete an inspection for certification, and a new COI or a Permit to Proceed will be issued, if an inspection for certification has been conducted to the point that the OCMI considers the vessel safe to proceed on the voyage. (See MSM Volume II, Material Inspection, COMDTINST M16000.7A (series), Chapter A6 for more details.)

c. Vessels sailing less than 15 days prior to expiration of COI. 46 U.S.C. 3314 prevents the grace period described above from being applied if the COI would expire within 15 days of the date of sailing from a U.S. port. A vessel would not violate this provision merely by sailing to a foreign port within 15 days of the expiration of the COI, provided it returns to a U.S. port before the COI expires. Such a vessel would be in violation if it sailed within 15 days of the expiration date and failed to return before expiration of the COI.

---

7. Marking of Hailing Ports

Under 46 CFR 67.123, a hailing port must be marked on some clearly visible exterior part of the stern of a documented vessel. The markings must be durable and made in clearly legible letters of the Latin alphabet or Arabic or Roman numerals of no less than 4 inches in height.

---

8. Towing of Vessels Permanently Laid-Up, Dismantled, or Out-of-Commission

a. Vessels are frequently towed for purposes of permanent removal from navigation or scrapping as these vessels reach the end of their useful lives. It has been generally determined that such vessels making a one-way voyage under tow; without crew, cargo, or passengers; and not holding documents as a merchant vessel, are not subject to inspection and certification requirements. Such vessels are "laid up, dismantled, or out of commission" under 46 U.S.C. 3302(e) and 46 CFR 90.05-1(a)(3). In accordance with this determination, when the OCMI is satisfied by documentary evidence or other means that certain conditions are met, such vessels do not require a COI. These conditions may include some or all of the following:

(1) The vessel is not currently documented by the Coast Guard.

(2) The vessel will carry no passengers or cargo.

(3) The vessel will be towed and unmanned.

(4) The vessel is making a one-way voyage for purposes of scrapping or permanent removal from navigation.

(5) The vessel is not intended to be used in commerce during the voyage.

(6) The vessel will pose no threat to life, property, or the environment while in U.S. waters.

NOTE: Such vessels require a Load Line Exemption Certificate. See MSM Volume IV, Technical, COMDTINST M16000.9 (series), Chapter 6 for guidance.

b. U.S. Customs and Border Protection has determined that, although such vessels require clearance before being towed to a foreign port, verification by the OCMI to the effect that "[(name of vessel], being towed on a one-way voyage for purposes of scrapping, etc., is not required to hold a COI" will suffice for clearance purposes should appear on the loadline exemption certificate.

c. Carriage of scrap. Scrap metal carried for ballast in such vessels will not be classed as cargo as long as the amount, location, and method of stowage of scrap is acceptable to the OCMI and does not exceed the tonnage of liquid ballast that would normally be employed. This is so that such vessels may meet the requirements given above. When the matter of what constitutes cargo is at issue, Commandant (CG-CVC) should be consulted.

d. Requirements for passage through the St. Lawrence Seaway. Vessels subject to the Load Line Acts (46 App. U.S.C. 86 or 88) and transiting under their own power to a

non-U.S. port for decommissioning require load line certificates, COIs, and all other applicable statutory certificates before leaving a U.S. port.

(1) This policy is not intended to contravene or supersede requirements of the Canadian government with respect to passage through Canadian waters and clearance from Canadian ports. Owners of vessels transiting under their own power for decommissioning should contact the Director, Marine Regulations Branch, Department of Transport, Ottawa, Ontario, Canada, for further information in this regard.

(2) Owners of such vessels intending to transit the waters of other countries should contact officials of those countries. The issuance of an International Load Line Exemption Certificate, by the local OCMI may be necessary. For further information and guidance, see MSM Volume IV, Technical, COMDINST M16000.9 (series), Chapter 6, and for applicable regulations, see 46 CFR 42.03-30(b)(3).

---

9. Vessels Operating in South-Eastern Alaska

46 CFR 2.01-80 states that the waters of southeastern Alaska inside of the general trend of the shore from Cape Spencer, southeasterly to Cape Muzon, and thence easterly to Sitklan Island, must be considered "lakes, bays, and sounds other than the Great Lakes" for administration of the vessel inspection laws and regulations. The waters between southeastern Alaska and Prince Rupert, BC, via Chatham Sound likewise have been classed "lakes, bays, and sounds" for purposes of vessel inspection. The "Inside Passage" between southeastern Alaska and Puget Sound is considered "lakes, bays, and sounds" for inspection and licensing purposes only if certain conditions are met. Approval by Commandant (CG-CVC) is required for vessels to operate between southeastern Alaska and the state of Washington under these considerations.

---

10. Dual Certification for Passenger-Carrying Vessels and Sailing School Vessels

Under existing regulations, a qualifying vessel may be operated in service part-time as a sailing school vessel and at other times as a passenger-carrying vessel (46 CFR Subchapter T or H). 46 CFR 169.103(b)(5) states that the sailing school regulations are not applicable when a vessel is operating under the authority of a current valid COI as a passenger-carrying vessel. This regulation was written specifically to clarify the dual service situation. Although the regulations allow for dual certification, the OCMI may be reluctant to issue a certificate, let alone two, without conducting an inspection each time the operator physically alters the vessel as it shifts from one service to the other. General practice is to issue only one certificate at a time for the appropriate service, thus creating both an administrative and an inspection burden each time the vessel changes service.

Alternatively, the OCMI may issue a single COI, under the conditions addressed below, to cover both services.

a. Single COI for predominant service. OCMIs may issue a single COI for the vessel's predominate service with an endorsement for the alternative service.

(1) Before issuing such a COI, the OCMI should be reasonably satisfied that the vessel is constructed, maintained, and outfitted in compliance with the applicable regulations regardless of which service the vessel is in at any given time. This requires the vessel to meet the more stringent requirements between 46 CFR Part 169 and either 46 CFR Subchapter T or H at all times.

(2) This procedure should enable the OCMI to avoid some degree of inspection each time the vessel shifts from one service to the other. With the vessel's material condition and outfitting fixed, operating conditions, manning, and possible total persons allowed may vary depending upon the applicable regulations and can be addressed accordingly in the endorsement for the alternative service.

(3) In cases where the OCMI finds it appropriate and practicable to permit outfitting to vary, such variance should also be addressed in the endorsement.

b. Period of validity. A vessel owner or operator must accept the application and maintenance of the more stringent regulations as a requisite to obtaining the benefits of a single COI, as opposed to trading COIs every time the vessel changes service and submitting to inspection as deemed necessary by the OCMI. Therefore, regardless of the predominate service under which the vessel’s COI is issued, the vessel must be certificated for a period that is consistent with the more stringent regulations, whether they are for the predominate service for which the certificate is issued or the lesser service for which the endorsement is added. The intervals for inspections and drydock and tailshaft exams must also be based upon the more stringent regulations.

---

11. Inspection of U.S. Vessels in Foreign Countries

The following offices have responsibility for the listed foreign marine inspection regions:

a. Sector Puget Sound: western coast of Canada.

b. Sector San Diego: western coast of Mexico north of latitude 20 North.

c. Sector New Orleans: South and Central America, the western coast of Mexico south of latitude 20 North, and all of the eastern coast of Mexico.

d. Sector Boston: eastern coast of Canada.

e. Far East Activities: Asia and Diego Garcia.

f. Activities Europe: Europe, the Mediterranean Sea, the Red Sea, the Persian Gulf, the Arabian Sea, and all of Africa.

NOTE: For areas in question or new construction projects, contact Commandant (CG-CVC).

---

12. Certification of Vessels Undergoing a Reflag and/or Major Conversion

a. NVIC 10-81, CH-1, was developed to allow certain categories of existing foreign-flag vessels to be brought under the U.S. flag in a manner consistent with the principles and levels of safety in current Coast Guard regulations or, in some cases, to Coast Guard standards in effect at the time of the vessel's construction.

(1) The NVIC makes reference to acceptance of vessels between 2 and 10 years old for reflag and conversion. Older vessels will not be precluded if they can meet the SOLAS Method I-C Structural Fire Protection Requirements, as amended in 1981, in addition to all other requirements prescribed in NVIC 10-81 CH-1.

(2) In addition, this NVIC can be used as a guideline for existing vessels that undergo a major conversion, are brought under Coast Guard inspection, or wrecked vessels that are able to register under 46 U.S.C. 14.

b. Major conversion determinations. Determinations of major conversions are made by Commandant (CG-CVC). It is important that vessel owners contemplating work that may constitute a major conversion contact Commandant (CG-CVC) as soon as they have a general concept of the work to be performed so it can be reviewed. The Coast Guard bases major conversion determinations on 46 U.S.C. 2101(14a). This defines major conversion as a conversion that--

(1) Substantially changes the dimensions or carrying capacity of the vessel;

(2) Changes the type of the vessel;

(3) Substantially prolongs the life of the vessel; or

(4) Otherwise changes the vessel so that it is essentially a new vessel.

c. Special provisions for the reflag of vessels participating in the Maritime Security Program (MSP):

(1) Background. The Maritime Security Act of 1996 became law as an amendment to Title VI of the Merchant Marine Act of 1936. The Maritime Security Program (MSP) is administered by the U.S. Maritime Administration (MARAD) Office of Sealift Support (MAR-630) and establishes a program for direct U.S. government payment to private vessel owners for the right to use designated U.S. flag vessels to carry military cargo in time of war, national emergency, or military contingency.

(a) These privately owned and operated commercial vessels will normally be employed in commercial operations unless called upon by MARAD for military operations. Foreign flag vessels may apply for MSP but must reflag to U.S. flag as a condition of participation.

(b) MSP vessels are not (and will not become, even upon activation) public vessels as defined by 46 U.S.C. 2101 (24). MSP vessels must be U.S.-documented vessels, subject to inspection and certification by the Coast Guard.

(c) Separate legislation in the Coast Guard Authorization Act of 1996 provides that reflagged MSP vessels only need to comply with ABS class rules (or the rules of another class society accepted by the Coast Guard) and international convention requirements if the vessel meets the eligibility conditions discussed in the following paragraphs.

(2) Eligibility conditions for reflag under MSP. The Coast Guard may accept previously conducted class society surveys and previously issued international certificates in lieu of establishing equivalency to U.S. regulations for all vessel equipment and systems, provided that--

(a) The vessel is classed by and designed in accordance with the rules of the ABS or another classification society accepted by the Coast Guard;

(b) The vessel complies with applicable international agreements and associated guidelines, as determined by the country in which the vessel was documented immediately before becoming a U.S. documented vessel; and

(c) That the country under which the vessel is currently flagged has not been identified by the Coast Guard as inadequately enforcing international vessel regulations on the vessel making application for certification.

(3) For MSP and application for inspection. In order to carry out the conditions described in the paragraph above, the following procedure must be followed to issue the initial COI and international certificates for a foreign vessel entering MSP.

(a) MARAD Headquarters (MAR-630) will notify Commandant (CG-CVC) when a foreign flag vessel is being considered for selection for participation in MSP. CG-CVC will conduct a review of the vessel's Port State Control boarding history in MISLE and notify MARAD of any significant instances of past non-compliance with international regulations. MARAD will notify CG-CVC and the vessel owner if the vessel has been selected for MSP participation.

(b) The vessel owner will apply for inspection to the OCMI in whose zone the reflag inspection will be conducted. If that location is not known at the time of acceptance into MSP (to facilitate timely plan review) the owner may make application to Commandant (CG-CVC) who will hold the application for forwarding to the cognizant OCMI when an inspection location has been selected. CG-CVC will provide a copy of the application to Commanding Officer, Marine Safety Center (MSC).

(4) Plan review to verify SOLAS compliance for MSP. The vessel owner must submit the items below to the Commanding Officer, MSC for review to verify compliance with SOLAS, MARPOL, ICLL, and that the vessel is designed in accordance with the rules of the ABS or other accepted class society.

(a) When the vessel has been classed and designed in accordance with rules other than ABS, the MSC must determine acceptance on a case-by-case basis for the purpose of MSP participation only. This acceptance of class rules and design for MSP must not be construed as acceptance for any other inspection program.

(b) The vessel’s owner, flag administration, and class society must identify all areas where previous equivalence or exception has been granted to SOLAS, MARPOL, ICLL, the design rules of the ABS, or other accepted class rules.

(c) Plans to be submitted. The following plans must be submitted:

[1] General arrangement plans.

[2] Structural fire protection division rating plans (assuming Method I construction, MSC will spot check fire boundary ratings and ventilation details, i.e., penetrations by the ventilation system of fire rated divisions).

[3] Fire detection system plans (to verify placement and overall system design).

[4] Fixed fire extinguishing system plans (a minimum 20 second time delay for releases into manned spaces must be required even though this is not specified in SOLAS).

[5] Automation system plans including a qualitative failure analysis for vital systems, or a letter from the class society stating that the systems are designed to meet the failsafe requirements of SOLAS.

(d) Plans to be submitted for verification of class approval. The following information/plans and class society approval letters must also be submitted, but generally will be examined only to verify the approval action of the class society and will not undergo MSC design review or OCMI inspection unless problems or unusual items are noted:

[1] Trim and stability booklets, including lightship properties and stability test data.

[2] Letter from the flag administration or class society indicating the vessel meets probabilistic damage stability requirements for vessels built after 1 February 1992.

[3] Letter from flag administration or class society indicating review/approval of the following items, with notes about all areas that require special attention/inspection, such as--

aa. Structures;

bb. Fire main systems;

cc. Bilge systems; and

dd. Steering gear and steering gear alarm systems.

(5) OCMI inspection for initial certification.

(a) Issuance of the initial COI is subject to the following:

[1] A satisfactory onboard inspection by the cognizant OCMI, conducted with a surveyor from the vessel's class society or flag administration who can explain interpretations of SOLAS, MARPOL, and the International Convention on Load Lines.

[2] The owner must provide the OCMI with access to the last annual survey report of the class society, the list of outstanding class recommendations and statutory requirements, and the latest drydock survey report (including latest gaugings).

[3] A list of all systems, equipment or other items that meet a standard different from the U.S. statutory requirements for a vessel of that size and service. (e.g. pressure vessels that are not ASME stamped or lifejackets that are not Coast Guard approved).

aa. This list is consistent with Coast Guard reflag policy of the past which has shown that the ability to rapidly identify these items greatly speeds the initial reflag inspection.

bb. The list will allow inspectors to identify and document items in the vessel’s inspection record that meet international, class or previous flag administration interpretations of standards. This is necessary to avoid duplication of this effort at subsequent inspections. It will also eliminate the need for the owner to continue providing a representative of previous flag administration at subsequent inspections.

(b) Conduct of the inspection. The initial inspection must be sufficiently detailed to verify full compliance with international regulations. The procedures applicable to foreign vessel port state control annual examinations described in MSM Volume II, Material Inspection, M16000.7A (series) Chapter D1 must be used as a guideline for the scope of the initial inspection.

[1] The inspector must consult the class society/flag administration representative in attendance when the inspector requires guidance as to the application of a particular international regulation. If the class society/flag administration representative in attendance verifies that the item in question is satisfactory under their guidelines, the OCMI will accept it. At the conclusion of the inspection, the inspector must make a special note in MISLE documenting all items on the vessel that are found to be acceptable to the class society/flag administration representative, but that

are treated differently under current Coast Guard policy. (NVIC 10-81, CH-1, provides a useful summary of Coast Guard requirements to use as a comparison to international requirements.)

[2] Satisfactory fire and abandon ship drills must be performed in the presence of the Coast Guard marine inspector. The drills must be conducted by the vessel's U.S. crew prior to issuance of the initial COI.

[3] In addition to the inspection described in MSM Volume II, Material Inspection, COMDTINST M16000.7A (series), Chapter D1, the inspector may verify that all current structures, equipment or systems on the vessel are in agreement with the plans reviewed by the MSC or approved by the class society and/or flag administration. The scope of the plan's verification is at the OCMI's discretion, but should generally be conducted as a spot check.

(c) Engine automation test. If the vessel requests reduced manning as a result of engine automation then the automation test procedure and approval must be in accordance with U.S. regulations and vessel inspection policy (e.g. NVIC 1-69, NVIC 6-84 and NVIC 10-81, CH-1). The MSC will review the test procedure (see C of this chapter). The final manning requirements must be established based on satisfactory verification of the engine automation, as outlined in NVIC 1-69.

(d) Deficiencies. Any area considered deficient as a result of the Coast Guard examination described in MSM Volume II, Material Inspection, M16000.&A (series), Chapter D1 (annual examination) must be subjected to an expanded examination based on the principle of "clear grounds" as defined in that chapter.

(e) Drydocking/internal structural examination. A separate drydock examination and comprehensive internal structural examination (including entry and examination of ballast tanks and double bottoms) is only required in conjunction with the initial COI if clear grounds exist to require it. The drydock date should be consistent with the previously established dates set by the flag administration and/or class society. If the credit drydock and/or internal examination coincides with the initial COI, the inspector must conduct the examinations in accordance with the guidelines established by the previous flag administration and/or class society.

(f) Pollution prevention. The vessel must comply with all U.S. regulations and international pollution prevention requirements that would be applicable to a foreign vessel calling in a U.S. port.

(g) Issuance of certificates upon satisfactory initial examination:

[1] COI. Upon satisfactory completion of the initial inspection, the vessel will be issued a COI for the route and service specified on its existing statutory certificates. A reduction in manning due to engine automation must be approved and tested as satisfactory in accordance with U.S. regulations and policy for reflags conducted under NVIC 10-81 (CH-1). The OCMI must place the following endorsement on the COI and as a special note in MISLE:

> "This vessel is certificated under the provisions of the Maritime Security Program (MSP) and is inspected and certificated solely in accordance with the requirements of class rules and international convention requirements as applicable. This vessel was issued its initial certificate of inspection in accordance with the MSP on DD MM YY." (Insert date inspection is complete.)

[2] International convention certificates. SOLAS, MARPOL, and ICLL certificates will be issued by the Coast Guard or by a Recognized Organization that is authorized to issue the certificate on behalf of the Coast Guard. This includes authorization granted under existing agreements, new agreements under 46 CFR Part 8, or the Alternate Compliance Program (ACP).

[3] OCMIs must document any areas where the previous flag administration or class society accepted a system or equipment that differs either from the Coast Guard's statutory requirements or Coast Guard enforcement of international regulations. OCMIs must also note such occurrences as a special note in MISLE.

(h) OCMI action if initial inspection is unsatisfactory. If the Coast Guard's initial inspection yields sufficient evidence to show that the country under which the vessel is currently flagged has been inadequately enforcing international vessel regulations on the vessel applying for certification, the COI must be withheld and Commandant (CG-CVC) notified.

[1] Commandant (CG-CVC) will notify MARAD that the vessel is not currently acceptable to receive a COI. Commandant and MARAD will then consult as to whether the vessel should be allowed to make repairs or modifications in order to complete certification for entry into MSP, or whether the vessel should be excluded from MSP participation.

[2] OCMIs are strongly encouraged to call upon the assistance of the traveling inspectors at Commandant (CG-54-TI) when the initial inspection of an MSP vessel indicates clear grounds for an expanded examination.

[3] Payment of user fees and overseas inspection expenses. User fees must be paid prior to the initial inspection for certification. Travel and per diem costs for overseas inspections must be paid in advance on a cost estimated basis. If owners cannot arrange for advance payment of user fees or travel costs (overseas only) due to scheduling difficulties, then Commandant (CG-CVC) must be contacted to determine if a delay in payment will be permitted until after the inspection has commenced.

(6) Inspection of MSP vessels subsequent to initial inspection. MSP vessels will continue to be inspected under the preceding guidelines for all subsequent inspections except as noted below.

(a) Intervals for subsequent inspection must be in accordance with international convention certificate requirements.

(b) Vessels accepted under MSP reflag must be reissued a COI every 5 years upon application from the owner if the vessel has completed all scheduled inspections for the maintenance of class and international convention certificates (including all annual endorsements, surveys and drydockings).

(c) OCMIs must continue to conduct inspections in accordance with the class rules, SOLAS, MARPOL, and ICLL. Situations when the previous flag administration or class society accepted a system or equipment prior to reflag which differs from the Coast Guard's current statutory or policy interpretation for the implementation for that international regulation (at the time of the initial inspection) should have been recorded as a special note in MISLE at the initial inspection. New installations or modifications to existing systems made subsequently to the initial reflag must conform to the Coast Guard's interpretation of international regulations at the time of the modification, so far as reasonable and practical.

(d) MSP vessels that elect to enroll in the ACP may employ ACP inspection procedures subsequent to the initial reflag inspection, which will be conducted by the Coast Guard.

(e) User fees must be paid in a manner consistent with all U.S. certificated vessels.

---

13. Vessels of Novel Design

a. Proposed operation. From time to time, an OCMI will be approached with some novel operation proposal that is not covered by any regulation. In such cases, the OCMI will coordinate the proposed operation and associated inspection requirements through the District Commander (p) to Commandant (CG-CVC).

b. Regulatory requirements. Commandant (CG-CVC) will consult with the cognizant OCMI to determine the level of regulation that will be applied to vessels in "novel" operations not covered by any or part of regulations.

C. PRE-INSPECTION PROCEDURES

---

1. Application for Inspection of U.S. Vessel, Form CG-3752

Applications for inspection for certification must be submitted to the cognizant OCMI by the vessel's master, owner, or agent on Application for Inspection of US Vessel, Form CG-3752 (see 46 CFR 2.01-1). The application for initial inspection of a vessel being newly constructed or converted must be submitted prior to the start of such construction or conversion. This must be followed by the submittal of plans and specifications required by the applicable regulations.

In the event of an office receiving an application for construction/conversion of a vessel that is not under that office's jurisdiction, the application should be forwarded to the appropriate OCMI and the applicant so advised. Inspection for certification must not commence until a proper application has been submitted by a U.S. citizen and the proposed operation of the vessel (use, route, passengers, etc.) is known to the OCMI and the inspector.

---

2. Preparation by the Inspector

The marine inspector must be as well informed as possible of the vessel's proposed operation (and its past history, as applicable) before commencing the inspection. Due to the many differing circumstances encountered, the availability of such information will vary. Generally, the following procedures should be used:

a. Prior to conducting any inspection service that is related to the compliance of its COI, marine inspectors shall ensure the appropriate Application for Inspection form (CG-3752) is properly filed and verify that the required annual vessel inspection user fee has been paid. 46 CFR 2.10 establishes inspection and examination fees for all vessels required to have a COI. User fee invoices are automatically generated for vessels with valid COIs. Additional fees are also required for inspections and examinations conducted at overseas locations.

b. Before beginning the inspection, the inspector should review the vessel's previous inspection records. For initial inspection, the inspector should also review copies of all approved plans, specifications, and relevant correspondence, and any record of outstanding deficiencies.

c. When the owner, agent, or master of a vessel previously inspected in another zone applies for inspection, the OCMI should obtain the inspection records for the previous inspection for certification and drydocking examination from the certificating OCMI. Such records should be returned after the inspection is completed, unless the vessel has permanently changed its principal port of operation to the zone where inspected. See MSM Volume II, Material Inspection, COMDTINST M16000.7A, Chapter A2 for more information.

D. CONDUCTING INSPECTIONS FOR CERTIFICATION

1. Initial Inspections

a. Definition. The initial inspection for certification is the first inspection held on a vessel during or after construction or conversion. It is a prerequisite to the issuance of the original COI.

b. Purpose. At the initial inspection, the inspector ascertains that the vessel has been built (or converted) and equipped in accordance with the applicable regulations, construction standards, and approved plans and specifications, and that its condition is such that it can be operated with safety of life and property in the service and route(s) specified. The inspector also ensures that the condition and installation of all equipment and associated apparatuses comply with applicable regulations.

(1) The initial inspection should be carried out with special attention to detail.

(2) All unusual circumstances that require interpretations of regulations, special considerations, the use of substitutions or equivalents, etc., must be carefully considered and the decisions well documented in the MSLE activity narrative and/or inspection notes.

c. Policies concerning ABS-classed vessels. NVIC 10-82 clearly establishes guidelines for the acceptance of ABS plan review and inspection during the initial inspection. This NVIC delineates areas of shared reviews and inspections and areas retained solely by the Coast Guard. Most ABS-classed vessels will fall under NVIC 10-82.

(1) An example of shared review and inspection is an Inert Gas System (IGS) or Crude Oil Washing (COW) system installed in a vessel for which the owner has requested ABS review and inspection. In this situation, the Coast Guard would accept ABS approval and inspection if ABS provides a letter certifying that the systems are in compliance with regulatory requirements.

(2) When the provisions of NVIC 10-82 are not followed, ABS will perform plan review and inspection for class only, and will not review or inspect for regulatory requirements. In these cases, the Coast Guard will complete the plan review and inspection requirements.

(3) NVIC 10-82 also applies to major conversions. Questions concerning the applicability of NVIC 10-82 must be referred to Commandant (CG-CVC) for resolution. For further information on stability see NVIC 3-97, "Stability Related Review Performed by The American Bureau of Shipping for U.S. Flag Vessels."

d. Conducting the inspection. When possible, the initial inspection must be conducted throughout the vessel's construction and fit-out period, with a final review of the condition of the vessel and its equipment upon completion of the construction and fit-out.

(1) Vessels being converted must be inspected throughout the conversion period.

(2) The inspector must bring any defects noted to the attention of the builder and contractor as soon as possible so that timely corrections can be made.

(3) The inspector must notify the OCMI of any controversial items so that they may be resolved, if possible, before work continues.

(4) See MSM Volume II, Material Inspection, COMDTINST M16000.7A (series), Chapter A2 concerning the handling of deficiencies.

e. Scope of the inspection. The inspection must be sufficient to determine the following:

(1) That the vessel is suitable for the service and route(s) in which it is to be employed.

(2) That the vessel is equipped with the proper lifesaving and fire protection appliances as prescribed by the regulations.

(3) That the vessel has suitable accommodations for passengers and crew.

(4) That the vessel is in a condition to warrant the judgment that it may be used in navigation with safety to life, property, and the environment.

(5) That the vessel fully complies with the requirements of applicable statutes and regulations, including those for pollution prevention and navigation safety in all other respects.

f. Compliance with plans and specifications. The inspector must have corrected copies of the approved plans and specifications available when inspecting new construction or conversion. These are considered work copies, for the use of the inspector during construction and for the OCMI's files after construction. If additional copies are needed for office use or filing, they must be requested from the submitter.

(1) Most plans and specifications are approved subject to comments in their transmittal letters. These letters are referred to in the approved plans and specifications and must be made available to the inspector who oversees the construction or conversion work. When approval is given subject to comments or recommendations of ABS or another recognized classification society, such comments or recommendations must also be made available to the inspector.

(2) Since equipment and system installations must be completed to the satisfaction of the OCMI, the inspector must check the complete installation for safety and compliance with applicable standards, as well as the plans and specifications. Any errors or omissions in plans that would result in unsafe conditions or noncompliance with applicable standards must be promptly brought to the attention of the builder and the OCMI for resolution.

g. Restricted visibility from the navigating bridge. Restricted visibility from the navigating bridge is most often encountered on container vessels, large tank vessels with the bridge aft, vessels with oversize cargo handling gear, and special purpose vessels such as MODUs and crane ships; however, it may occur on any type of vessel.

(1) In most cases, this problem will be identified and resolved in plan review. In those cases when restricted visibility becomes apparent after the start of construction, the matter should be brought to the attention of the owner as early as possible, to avoid costly modifications late in the construction of the vessel. Technical guidelines for bridge visibility are contained in the MSM Volume IV, Technical, COMDTINST M16000.9 (series).

(2) Causes of restricted visibility from the navigating bridge. These can be separated into two broad categories: those with a movable or temporary obstruction (such as container deck loads) and those with a permanent obstruction (as in a vessel structure).

(a) As situations of the first category are operational in nature, vessel certification should not be withheld for this type of visibility restriction. However, the problem should be brought to the attention of the owner so that the owner may take appropriate action to remove obstructions to visibility that interfere with the safe navigation of the ship.

(b) Situations of the second category are permanent in nature and cannot be operationally controlled after the vessel is in service. Therefore, a vessel with this type of obstruction should not be certificated when, in the opinion of the OCMI, visibility from the navigating bridge is restricted to such a degree that the vessel cannot be navigated safely.

NOTE: Tinted windows may also restrict visibility. They are prohibited by regulation (e.g., 46 CFR 92.03-1(c)) and by policy to meet the intent of the requirements of 33 CFR Part 164 to maintain clear unobstructed visibility for promoting safe navigation; unless it can be demonstrated that the amount of light transmitted through them is equivalent to that transmitted through clear glass.

h. Trial trips. An inspector is required to observe the operation of each new vessel during a trial trip, once the vessel is complete and before initial certification. The specific regulations covering trial trips are in 46 CFR 58.01-30 and also in 46 CFR 31.10-40 for tank vessels. A vessel on a trial trip is not required to have a COI or a Coast Guard-issued certificate of documentation.

(1) For practical purposes, a new vessel on a trial trip is not required to be fully compliant with all COI requirements, because the trip is--

(a) Usually of short duration;

(b) Frequently made with Coast Guard inspectors aboard;

(c) One of the final incidents of Coast Guard inspection prior to the initial issuance of a COI; and

(d) Usually made with the equipment required for a COI, with the vessel operated by licensed and certificated personnel.

(2) An inspector observing a trial trip does not supervise and instruct vessel personnel. Specific matters may be referred to the inspector for advice, but the supervision of the tests according to the trial schedule rests with the builder's representatives. However, as part of the initial inspection of any vessel, the inspector may require such tests as he or she deems necessary to be assured of the safety and seaworthiness of the vessel.

---

2. Subsequent Inspections for Certification

a. Intent. At subsequent inspections for certification, the inspector must ascertain that the vessel and its equipment are being maintained in a safe condition and in accordance with applicable laws and regulations, and determine whether changes have occurred in the vessel tending to make its continued operation unsafe. These subsequent inspections should be carried out with special attention to the condition of the vessel and its equipment.

(1) The inspector must be particularly alert for unauthorized changes to the vessel and its equipment.

(2) Upon completion of the inspection, the inspector and the OCMI must be satisfied that the vessel may be operated safely in the proposed service for the period covered by the COI, and that it otherwise complies with the applicable laws and regulations.

b. Inspector's obligations. The inspector must use all available evidence when appraising the condition of a vessel and its equipment, including the latest inspection findings, records of previous Coast Guard inspections, the opinions or records of other interested surveyors or inspectors, information furnished by the officers and crew, facts concerning the vessel's classification, and previous certification. The inspector may seek the advice of experts in the particular field involved, such as boilermakers, shipfitters, and welders, or the opinion of more experienced inspectors or technical personnel assigned to his or her unit. Based on this evidence and his or her own inspection, the inspector must reach an independent conclusion as to vessel and equipment conditions and act accordingly. The OCMI must be consulted when there is doubt in the inspector's mind as to a proper course of action.

NOTE: See 46 U.S.C. 3315 concerning the disclosure of sources of information.

c. Scope of inspection. The inspection must be of sufficient scope to determine the following:

(1) That the vessel has a structure suitable for the service in which it is to be employed.

(2) That the vessel is equipped with the proper lifesaving, fire protection appliances, pollution prevention, and navigation safety as prescribed by appropriate regulations.

(3) That the vessel has suitable accommodations for passengers and crew.

(4) That the vessel is in a condition to warrant the judgment that it may be navigated safely.

(5) That the vessel, in all other respects, fully complies with the applicable laws and regulations.

(6) That the vessel's boilers, unfired pressure vessels, and all appurtenances thereof, as well as the propelling and auxiliary machinery, the electrical apparatus, and all other equipment comply with the applicable laws and regulations.

(7) That the vessel may be safely employed in its proposed service.

E. HULL INSPECTIONS

1. General Concerns

The inspector must determine the adequacy of the complete hull structure by the review of plans before construction; review of approved plans during construction, reinspections of the hull after construction, and examination of any repairs or alterations.

In certain cases, the OCMI may accept approved plans and the ABS Classification Certificate as evidence of the structural efficiency of the hull. However, the inspector must perform sufficient examinations and tests of the hull structure at the inspection for certification to determine that the condition of the hull is suitable for the vessel's service and is such that the vessel may be navigated safely.

Additionally, all protected and unprotected saltwater ballast tanks must be inspected at least twice in a 5-year period. The inspector must indicate which tanks have been examined.

The inspector must ensure that the regulations regarding watertightness and weathertightness of the hull, including weather decks, are strictly enforced. The inspector must give particular attention to cargo hatches, closures, securing devices, gaskets, means of attachment, etc.

---

2. Older Vessels

a. Inspection of older vessels. The determination of the true condition of a vessel and its equipment may be more difficult for an older vessel. The inspector should make every effort to research an older vessel's records to detect any recent structural, machinery or equipment failures/problems. An increase in the rate of failures may indicate a general deteriorating condition.

(1) The inspector is not limited by regulations from making tests or inspections as he or she deems necessary to be assured of the safety and seaworthiness of the vessel. Tests and inspections may include machinery tests, hull gauging (see F.3 below), inspections of equipment, etc., regardless of regulatory requirements or the type of inspection being performed (e.g., inspection for certification, reinspection, drydocking, or deficiency check.)

(2) The inspector should review the most recent hull gauging report as an aid in determining--

(a) Whether additional or new gauging is called for; and

(b) What area(s) of the hull might require special attention.

(3) Traveling Inspector (CG-54-TI) notification. Commandant (CG-5P-TI) must be notified when any vessel 20 years of age or older and over 4,000 GT is scheduled for an inspection for certification and/or drydocking. Traveling inspectors will attend selected older vessel inspections; therefore, notification as far in advance as possible is required.

(4) Special consideration. For those vessels that are not required to meet the load line regulations, special consideration must be given to hull structure and arrangement, freeboard, protection of openings, drainage, and the other items normally considered in the issuance of a Load Line Certificate. Since these items will not be checked by a load line "assigning authority," they must be attended to by the inspector.

---

3. Hull Gaugings

NVIC 7-68, "Notes on Inspection and Repair of Steel Hulls," gives guidance as to when an inspector should require limited or belt gauging. NVIC 7-68 urges the inspector to witness gauging at any periodic survey and make use of the results.

Additional gauging or gauging at an inspection that does not coincide with an ABS special survey should be required by the inspector when deemed necessary in order to determine the seaworthiness of a vessel. As per ABS rules, "The first Special Periodical Survey becomes due 4 years after the date of build. Subsequent Special Periodical Surveys are due four years after the previous Special Survey." ABS may defer special surveys for up to 12 months.

---

4. Load Lines

Certain vessels in ocean, coastwise, or Great Lakes service are required to meet the requirements of 46 CFR Subchapter E (Load Lines) with respect to strength, closure of openings, protection of openings, guardrails, freeing ports, means of access, etc.

Inspections for compliance with these regulations are made by ABS or another assigning authority approved by the Commandant. A current Load Line Certificate will normally be accepted by the surveyor or inspector as evidence that the vessel meets the requirements of 46 CFR Subchapter E.

Although load line assignments are made by an assigning authority, the enforcement of load line requirements rests with the Coast Guard. Therefore, marine inspectors should examine the weathertightness of cargo and other hatchways covered under the load line regulations during routine vessel inspections.

If the surveyor or an inspector discovers that a vessel holding a current Load Line Certificate is not in compliance with the regulations, or that the condition of any fitting covered by such regulations is not satisfactory, they must inform the OCMI and ensure corrective action to achieve compliance is taken.

a. Weathertight and watertight. For regulations concerning weathertight and watertight standards, see 46 CFR 42.09-25(b), 42.09-40, 42.15-15, 42.15-25, and 42.15-30. See also paragraph 6.F.5 below.

b. Master's responsibility. Regulations also task the vessel's master with the responsibility of ensuring that all exposed cargo hatches are properly secured prior to leaving protected waters. See 46 CFR 78.17-35, 97.15-20, and 196.15-20.

---

5. Watertight and Weathertight Inspections

At inspections for certification, the adequacy of watertight and weathertight fittings and closures will be determined. An operational test of hatch covers will normally be witnessed and tightness of hatch covers verified. If practicable, such tests should be performed at the same time that the load line-assigning authority is performing an annual or periodic load line survey.

During periodic inspections, watertight and weathertight closures and fittings must be examined to the extent necessary to ensure that they are being properly maintained. The following additional guidance and standards apply to watertight and weathertight inspections:

a. Watertight. Watertight closures such as cargo ports and other similar openings in the sides of vessels below the freeboard deck must be designed to ensure the same watertightness and structural integrity commensurate with the surrounding shell plating (46 CFR 42.15-55). The small passenger vessel regulations previously defined watertight as to effectively resist the passage of water when subjected to a hose test of 30 psi. Gaskets must be clean (unpainted) and flexible to provide a tight seal. Coamings and knife-edges should be structurally sound, straight, and true.

NOTE: For T-boats, see 46 CFR 179.310, and for K Vessels, see 46 CFR 116.1160.

b. Weathertight. Weathertight means that water will not penetrate into the vessel in any appreciable amount in any sea condition (46 CFR 42.13-20).

(1) Hatchcovers closed by portable covers must be secured weathertight as required in 46 CFR 42.15-25.

(2) Weathertight fittings for small passenger vessels must be constructed to effectively resist the passage of water to appreciable degree under continuous exposure to driving rain or spray. Vents, cowlings, coamings, etc., should be sound, properly fitted, and secured to prevent flooding from boarding seas.

c. Vessels of unique design. Special emphasis on weather deck openings should be placed on vessels of unique design. Even a small amount of flooding can appreciably affect stability on MODUs, hovercraft, pontoon hulls, etc. The OCEAN RANGER casualty emphasized the need to prevent and detect flooding in unmanned spaces when the chain locker flooded from boarding seas. Chain locker covers serve to reduce the amount of downflooding through the spill pipe or spurling gate and can be made more weathertight by stuffing rags, cement, or gasket material around the chain prior to heavy weather.

d. Securing devices. Hinges, locking mechanisms, retaining brackets, dogs, and other securing devices should be sound and operate freely. Covers must be readily available and easily secured for closing in the event of fire as well as heavy weather.

e. Repairs/Strength. All closures and securing devices must be able to withstand the forces of boarding seas. Repairs must maintain the structural integrity of the closure. Inspectors should not allow the use of plastic putty, e.g., "red hand," to repair strength members of cargo hatch covers. NVIC 7-68 must be used as guidance for the repair of steel hatch covers.

f. Testing of closures. Testing of closures may be done visually by light testing, pressure testing, or hose testing. Watertight closures or fittings should be tested under the design pressure where practicable. Otherwise, a hose test over 30 psi may be accepted. Weathertight fittings should be hose tested for several minutes and allow no more than a slight seepage of water to pass. An operational test should be performed on hatch cover closure devices.

g. Freeing ports. When conducting a compliance exam boarding of a fishing vessel or inspecting a charter fishing boat, inspectors should examine the freeing ports to ensure they are clear, and if fitted with “flapper” closures, that they are operable and will allow water on the deck to clear over the side. The charter fishing vessel COUGAR is an example of a vessel foundering and sinking due to an accumulation of water on the aft deck due to inoperable freeing ports.

h. Hatches – watertight integrity. Manhole covers installed in watertight double bottoms on small passenger vessels must be inspected to ensure they meet a suitable watertight reliability performance standard.

(1) Inspectors should examine all hatch covers to ensure that the gasketing material is in place and that it provides the designed watertight integrity, and that the hinges and securing devices are operable. This includes all watertight doors, hatch covers, and manhole covers to all integral hull tanks (voids, ballast, etc.), especially the o-rings on the single bolt tank covers.

(2) A failed tank cover was identified as a problem in the grounding of the small passenger vessel YORKTOWN CLIPPER when the void tank cover o-ring failed causing flooding of the accommodation spaces.

---

6. Bulkhead Penetrations

The use of epoxy resin as a pipe seal in watertight bulkheads is considered satisfactory when the maximum piping temperature does not exceed 200°F and structural fire protection qualities are not required by the regulations. Accordingly, epoxy resin should only be used as a pipe seal in watertight bulkheads on passenger vessels if the passenger vessel is less than

100 GT. The resin should be subjected to the appropriate standard fire test as required by 46 CFR Part 72.

F. MACHINERY INSPECTIONS

1. General

At each subsequent inspection for certification, the inspector must examine a vessel's machinery as required by law and regulations. Inspections and tests must be performed to ensure that main and auxiliary machinery, boilers and their appurtenances, and other equipment are in satisfactory operating condition and suitable for the intended service. To help with this determination, the inspector must ask the chief engineer or officer in charge of the machinery about possible defects or imperfections in the equipment, boilers, and machinery of the vessel.

2. References

46 CFR Subchapters F and J contain the primary standards for the inspection of main and auxiliary machinery installations on all vessels except small passenger vessels inspected under 46 CFR Subchapter T ("T-boats"). As indicated in 46 CFR 58.01-5, these standards are supplemented by the ABS's standards. 46 CFR Subchapter F regulations apply to T-boats only insofar as they are made applicable by 46 CFR Part 182. As provided in 46 CFR 167.25, boilers and pressure vessels and their piping and appurtenances on public nautical school ships must conform to the requirements of 46 CFR Subchapter F, or to U.S. Navy or Coast Guard Standard Construction Specifications.

3. Vessels that are Not Classed

On vessels that are not classed by a recognized classification society, the inspector must, when practicable, require and observe an operational test on all main and auxiliary machinery to determine that its condition is satisfactory. The inspector may require an operational test of any machinery when necessary to determine its condition. The inspector should keep safety requirements foremost in mind during the inspection of engineering equipment. The requirements of 46 CFR Subchapter F (Marine Engineering) and the instructions in this manual are not intended to cover all contingencies that may be encountered during an inspection. The inspector may require any reasonable tests or inspections deemed necessary to ensure the safety of the vessel. It is incumbent upon the inspector to be alert to unsafe conditions and to require corrective measures before these conditions can cause casualties.

4. Inspection of Main Propulsion Machinery

a. During the inspection for certification of main propulsion machinery, the inspector should be generally guided by 6.F above.

b. Overspeed and low oil pressure trips. Automatic speed controls for propulsion prime movers of turbo-electric, diesel-electric, or clutched diesel propulsion systems must be tested periodically. Tests of the operation of overspeed and low oil pressure trips, and the alarm signals of these controls on turbo-electric, diesel-electric, or clutched diesel drive vessels must be witnessed by a marine inspector.

NOTE: Any operational tests of lube oil shutdown controls should not risk shutting off the oil supply to the bearings. Additionally, overspeeding geared turbines and direct drive diesels is considered impractical and unnecessary, and should not be required under normal circumstances. Tests of the overspeed safety devices should be as per the approved automation procedures.

c. Main engine gravity-type lubricating systems. In one casualty reported aboard a C3-S-A2 cargo vessel, the propulsion turbines sustained extensive damage due to insufficient lubricating oil. Investigation revealed that a closed or partially closed valve in the piping system from the gravity tanks to the main engine caused a reduced flow of oil to the turbines. This valve was marked "L.O. GRAVITY TANKS TO GEARBOX" and was located approximately 4.57 m (15 ft) from the starboard gravity oil tank. The valve was not included in the original approved plans of the piping system and, since it was in addition to the shutoff valves at the tanks, there was no justification for its being in the system. Because a similar condition may exist on other vessels, the following actions must be taken:

(1) During the inspection or reinspection of vessels with gravity-type lubrication, the discharge piping from the gravity tanks must be examined.

(2) If shutoff valves are found in addition to those at the gravity tanks and unnecessary to the system, they must be secured in the open position or removed.

G. INSPECTION AND HYDROSTATIC TESTS OF BOILERS

1. General

Marine boilers have historically been classed into two general types: firetube (or "tank") boilers and watertube boilers. A new type of marine boiler, called a hybrid boiler, has recently been approved for auxiliary steam use aboard U.S.-flag vessels. The American Society of Mechanical Engineers (ASME) Manufacturers' Data Report forms must be made

available to the Coast Guard marine inspector for review at the time of any boiler installation, per 46 CFR 52.01-145. The marine inspector will inspect each boiler after installation and review the Data Report forms to ensure the boiler complies with Coast Guard regulations. See 46 CFR 52.01-135 and 53.10.

a. Firetube boilers. The most common firetube boiler is the "Scotch" type, still in use on Great Lakes vessels, river vessels, and, in some areas, harbor tugs. Firetube boilers are usually found on pile-driving barges, steam dredges, OCS platforms, and older vessels propelled by reciprocating engines with very simple boiler feed systems. However, some are coal-fired. Feed water control is primitive at best and, generally, no provision is made for keeping dissolved oxygen out of the boiler water.

b. Watertube boilers. Watertube boilers are designed for operation under considerably greater stresses than firetube boilers.

(1) Since the metal tubes of watertube boilers are subject to higher temperatures than those in firetube boilers, scale deposits that are allowable in firetube boilers are unacceptable in watertube boilers. For these reasons, only distilled water can be used for boiler feed and close regulation of the feed water chemistry is essential to prevent pitting of the boiler metal and to reduce scale deposits to a minimum.

(2) Compared to firetube boilers, the pressure-containing parts of watertube boilers are of simple design, without complicated riveted seams and stayed surfaces. Repair frequency is considerably lower and, when repairs are necessary, they involve such operations as tube renewals, refractory and insulation repairs and renewals, and boiler casing maintenance.

c. Hybrid boilers. Hybrid boilers incorporate a design feature which combines the concepts of both firetube and watertube boilers. The concept makes efficient use of space and consumes less fuel than a traditional firetube boiler.

(1) Hybrid boilers usually burn number 6 fuel oil, but can also burn a variety of other fuels, including heavy oils, sludge, and solid waste with a few additional pieces of equipment.

(2) Current designs average about 1.53 m (5 ft) in outside diameter, 3.66 m (12 ft) in height, and consist of upper and lower chambers connected by a tube nest.

(3) Certain designs have incorporated engine exhaust gas firing along with in-port oil firing, thus eliminating the need for a ship's exhaust gas economizer. The burner and register unit is mounted at the boiler front on the lower chamber and is exactly the same type of unit that would be found on a traditional firetube boiler. Standard appurtenances such as safety valves, water glasses, feed and stop valves,

steam gauges, and blow-off valves are also incorporated in present design features.

(4) Current furnace designs consist of horizontal cylindrical or vertical torispherical type configurations. Horizontal types are connected to the boiler shell by full penetration welds. The vertical furnaces are attached to the shell by an ogee ring which can either be integral to the furnace or be an external support flange. The ogee ring must be joined to the furnace by a full penetration weld. The connection of the ogee ring to the boiler shell must either be a full penetration weld if an external support flange, or a fillet weld if an integral type ogee ring. The integral type ogee ring must meet ASME Section I PFT 20.5.

(5) Depending upon size, the furnace may be supported by a number of stays that extend from the furnace to the boiler shell. The number of stays used for support depends on the furnace size and the maximum allowable working pressure (MAWP) of the boiler. In some cases, stiffening rings are used to add support to the furnace in lieu of stays.

(6) At the apex of the furnace, an exhaust pipe extends from the furnace into the lower boiler tube sheet. This pipe passes the exhaust gas over the steam generating tubes before the gas exits through the flue. Steam generating tubes connect the lower tube sheet to the upper tube sheet. There may also be downcomer tubes installed in the tube nest between the two tube sheets. Within the tube bundle are several stay tubes whose function is to add support to the tube sheets. Above the upper tube sheet, in the upper chamber, is the steam-generating area. The dry pipe is located near the center of the upper head. Future designs may incorporate variations on this basic theme.

---

2. Examination and Testing of Firetube Boilers

a. Test and examination intervals. Title 46 CFR Subpart F requires annual hydrostatic tests for propulsion firetube boilers. No extension of this requirement is authorized. However, there are certain alternate provisions. It is anticipated that the following authorizations must be exercised primarily to permit the test and examination interval to coincide with the vessel's drydocking or similar out of service availability period.

(1) OCMIs are permitted to extend the hydrostatic testing interval for non-propulsion firetube boilers, of not more than 10.55 kg/cm^2 (150 psi) MAWP on vessels other than passenger vessels, to a period not to exceed 5 years (60 months) since the last hydrostatic test.

(2) OCMIs are authorized to extend the hydrostatic testing interval for non-propulsion firetube boilers of not more than 10.55 kg/cm^2 (150 psi) MAWP on passenger vessels to an interval of not more than 3 years (36 months) since the

last hydrostatic test, provided that not less than two hydrostatic tests are conducted within any 5-year period.

(3) OCMIs may extend the hydrostatic test interval for non-propulsion firetube boilers of 10.55 kg/cm^2 (150 psi) MAWP or greater on any type of vessel to an interval not to exceed 3 years (36 months) since the last test, provided that not less than two hydrostatic tests are conducted within any 5-year period.

(4) OCMIs may authorize fireside and waterside examinations of firetube boilers of less than 10.55 kg/cm^2 (150 psi) MAWP to be conducted at an interval not to exceed 3 years (36 months) since the last examination, provided that not less than two such examinations are conducted within any 5-year period.

b. Hydrostatic tests. Firetube boilers are particularly vulnerable to thinning of the plating, tubes, and staybolts by corrosion. This is often seen in the form of pitting, attributed to dissolved oxygen or the use of corrosive boiler water.

(1) The hydrostatic pressure should be maintained at 1.5 times the MAWP throughout the inspection of the fireside.

(2) When boiler repairs are necessary, the methods, materials, and workmanship employed must comply with the requirements of 46 CFR Part 59.

(3) In Scotch-type boilers, pitting is commonly found on the outside of the tubes and the shell and head plating near the waterline, the combustion chamber top plating, the furnaces, and the bottom shell plating. The numerous highly stressed riveted joints in firetube boilers are prone to attack by stress corrosion cracking, generally resulting from the deposit of corrosive solids contained in the boiler water.

c. Interior examination. The interior examination of a firetube boiler should occur first and be conducted as follows:

(1) The interior of the furnaces and combustion chambers should be examined first. Furnaces and flues should be checked for distortion by measuring with a tram bar. When corrugated or plain furnaces or flues are distorted and no longer in true circular shape, they must be repaired as required by 46 CFR 59.15-1(a) or the boiler pressure must be reduced as required by 46 CFR 59.15-1(c).

(2) Combustion chamber wrapper plates and back plates should be hammer tested, and areas suspected of being thin should be drilled and gauged. Broken combustion chamber stays will generally be indicated by leakage from the drilled telltale holes. The combustion chamber back plate should be checked for evidence of bulging plating between the staybolts.

(3) Riveted wrapper plate seams and the furnace connection to the combustion chamber should be checked for leakage. The back tube plate should be carefully examined since leakage in this area, which cannot be corrected by rolling tubes, is sometimes due to cracks in the ligaments between tube holes.

(4) Tube sheet examination. The front tube sheet should be examined next. This is an area particularly susceptible to corrosion from leaking tubes, and to erosion caused by the use of saturated steam for soot blowing. Leaking tubes should be made tight by rolling, or should be replaced.

e. Exterior examination. The exterior examination of a firetube boiler should occur as follows:

(1) The exterior of the boiler shell and heads should be examined first. All lagging of the shell and heads is not normally taken off during annual inspections; however, all portable sections should be removed while the hydrostatic pressure is maintained. Wherever moisture appears, sufficient lagging should be removed to determine its source, whether leaking seams, broken staybolts, or defective boiler mounting gaskets.

(2) The plating in way of the boiler mountings should be examined for evidence of wastage due to leaks from valves and fittings. Leakage from the bottom of the front and back heads in way of the flanging of the plate should be noted for further examination of the inside of the head; cracks induced by flexing of the head sometimes penetrate the plating.

(3) Riveted seams showing evidence of leakage should be carefully examined; cracks occasionally occur between rivet holes or extend from rivet holes to the plate edge.

(4) The manhole gasket seats and adjacent plating should be checked for signs of wastage due to gasket leaks; the radial clearance between the manhole plate and the head should not be excessive.

(5) The boiler saddles, foundations, and collision chocks should be hammer tested to detect evidence of deterioration; these members are subject to severe wastage from the corrosive action of bilge water.

(6) The hydrostatic pressure should then be released and the boiler drained out.

f. Examination of the boiler waterside. The inspection of the waterside of the boiler should occur as follows:

(1) The inspection of the waterside of the boiler is most conveniently begun by entering through the top manhole. The dry pipe, internal feed lines, and surface

blow pipe should be examined first; defective gaskets at the point of attachment of the internal feed lines to the boiler head are frequently the source of erosion of the plating.

(2) The butt strap and the rivets attaching the heads to the shell should be sounded with a hammer. Where rivets are found to be loose or rivet heads missing, the rivet holes should be searched for cracks by nondestructive testing methods after the rivets are removed.

(3) The stay rods, girder stays, and combustion chamber tops should be examined for evidence of wastage due to corrosion. The screw stays at the back and sides of the combustion chambers are difficult to examine because of close clearances. However, a good evaluation of the condition of these members can be made with the use of a portable electric light lowered successively between the rows of stays. The most common deficiency found in these stays is "necking," a reduction in diameter near the plate surface caused by corrosion and stresses from expansion of the combustion chamber.

(4) The boiler tubes are so closely spaced that visual inspection must usually be confined to the top and side rows. Pitting is frequently seen in these tubes. Widely scattered pits can usually be disregarded, but deep pits extending over a large area may so reduce the wall thickness that replacement of tubes is necessary (from the standpoint of stress, tubes will satisfactorily function with a reduction of wall thickness of up to 50 percent). In any event, when evaluating the condition of boiler tubes, a distinction must be made between plain tubes and stay tubes; stay tubes have a much greater initial wall thickness.

g. Completing the boiler examination. Finally, the lower part of the boiler interior is inspected as follows:

(1) The most common defects in this area are corrosion of the plating of combustion chambers, furnaces, shell, and heads by pitting, and grooving of the flanged plating of the heads and furnaces.

(2) Pitting often attacks the plating of the furnaces, combustion chamber wrapper plates, back plates, and the bottom plating of the boiler shell.

(3) Grooving due to thermal stresses is frequently seen in the flanges of the front and back heads, and at the connections of the furnaces to the combustion chambers.

(4) Radial grooving, originating in the holes drilled in the front and back heads for the stay rods and extending in a "spider web" from these holes, is occasionally encountered.

3. Inspection of Watertube Boilers

Test and examination intervals.

a. Inspection of watertube boilers. Title 46 CFR Subpart F requires hydrostatic tests for all watertube boilers quadrennially (annually, in the case of passenger vessels). The following authorizations must be exercised primarily to permit the test and examination interval to coincide with the vessel's drydocking or similar out of service availability period.

(1) Excepting passenger vessels, OCMIs are authorized to extend the hydrostatic testing interval for one year (12 months), to a period not to exceed five years (60 months) since the last hydrostatic test. In the case of passenger vessels, the hydrostatic test interval may be extended up to a period not to exceed 30 months since the last test, provided that no less than two hydrostatic tests are conducted within any 5-year period.

(2) OCMIs may extend fireside and waterside examination intervals for watertube boilers, including economizers, auxiliary boilers, low pressure heating boilers, and unfired steam boilers to a period not to exceed 30 months since the last examination, provided that no less than two such examinations are conducted in any 5-year period.

(3) Hydrostatic pressure tests are applied annually to passenger vessel boilers, and at 5-year intervals to the boilers of other vessels.

(4) Following repairs and at the conclusion of inspections, watertube boilers should always be hydrostatically tested to a minimum of 1.25 MAWP if substantial.

b. Interior examinations of watertube boilers. The inspection is most conveniently begun inside the furnace, as follows:

(1) The waterwall tubes and screen tubes should be examined with the aid of a spotlight for evidence of blistering or distortion. Severely blistered tubes should be renewed. A minor amount of tube distortion is acceptable if the insides of the tubes are clean. If there is evidence of tube leakage at the ends of the waterwall tubes, sufficient refractory should be removed to expose the waterwall headers so that the leakage can be traced to its source.

(2) The superheater and part of its support structure can generally be seen from inside the furnace. In this area, burned support brackets and badly warped superheater elements are common defects.

(3) The baffles above and below the superheater in D-type boilers should be examined. Some boilers of this type are fitted with feeder tubes in the furnace floor, which can be examined only when the brickwork is removed. Defects in these tubes, however, are rarely encountered; the furnace floor should be disturbed only when leakage is suspected or for refractory repairs.

(4) Furnace refractory is subject to damage from erosion due to direct flame impingement, fusion occurring at high rates of combustion, and destruction of insulation due to improper drainage during water-washing operations. When the damage is local, the defective area may be repaired; however, it is sometimes necessary to rebuild the walls or floor.

c. Exterior examinations. The inspector should continue with an exterior examination, as follows:

(1) The tubes and headers of economizers and gas air heaters are vulnerable to external corrosion due to condensation and should be examined through the access openings.

(2) The steam drum and its accessories should be carefully checked; if a hydrostatic pressure test is applied, the nozzles, gaskets, and welded pipe connections should be searched for leakage.

(3) In D-type boilers, the sliding feet that permit linear expansion of the water drum should be examined.

(4) Expansion of the generating tubes of straight tube boilers is accommodated by bolting the front headers rigidly and securing the back headers with loosely fitted bolts; the condition of these bolts should be checked.

(5) In sectional header boilers, the riser tubes, drum nipples, and top row of generating tubes can be reached for examination from the access opening below the steam drum.

(6) Removal of the superheater access doors in D-type boilers will permit access to the superheater and the lower part of the steam drum. In both boiler designs, the casing in way of the steam drum should receive attention; gas leakage in this area is common. The casing below the steam drum should be examined; burning or bulging of this casing or distortion of access door frames is usually due to destruction of the insulation. If these conditions are found, the buckled casing must be removed so that the insulation can be replaced.

b. Header examinations in sectional header boilers. The headers of sectional header boilers should be examined next, as follows:

(1) Leaking handhold plates should be marked for later removal and renewal of gaskets. The gasket surface should be examined with the aid of a mirror; chronic leakage is sometimes due to steam cuts across the seating surface.

(2) The handhold plates of superheater headers should be similarly examined, and the superheater tubes should be checked for leakage where these tubes are rolled in the headers.

(3) The short nipple connections of the transverse mud drum to the front headers and the bottom blow valve connection to this header should be checked for leakage; external corrosion of the nipples is sometimes encountered.

(4) The tube joints, handhold plates, and drain nipples of the waterwall headers should be checked for evidence of leakage and external corrosion. The air duct beneath the furnace floor should be examined to ensure that it is free from accumulation of oil.

c. Header examinations in D-type boilers. The superheater headers and waterwall headers of D-type boilers should be examined as follows:

(1) The vestibule below the economizer or air heater should be opened and cleaned. In this area, the ends of the generating tubes, at the connections to the bottom drum, can be seen. Because of the close spacing of the tubes, inspection is usually limited to the outer rows; however, external corrosion of these tubes, due to soot deposits and improper water-washing, is not uncommon.

(2) The bottom drum manhole opening, bottom blow valve connection, and drum support saddles should be examined. In this area, leakage and associated wastage are rarely seen; however, the foundations of boilers installed directly on the tank tops are subject to wastage from the corrosive action of bilge water.

d. Examinations of the waterside. The waterside should be examined as follows:

(1) The interior of the steam drum is the best starting point for inspection of the waterside of the boiler.

(2) The flanged piping connections of the desuperheater and internal feed lines should be hammer tested; if the tightness of the desuperheater piping is in doubt, it should be hydrostatically tested.

(3) The steam drum should be thoroughly cleaned prior to inspection; portions of the drum internal platform should be removed to permit a close examination of the drum interior and the tube ends. Pitting along the waterline, in the bottom of the

drum, and in the ends of the riser tubes and generating tubes, is occasionally found.

(4) The brackets supporting the dry pipe, internal feed lines, and desuperheater should be examined to ensure that the securing bolts are tight.

e. Examination of tubes. Tubes should be examined as follows:

(1) A sufficient number of handhold plates should be removed from the headers of the generating tube bank, superheater, economizer, and waterwall tubes to permit a comprehensive examination of these tubes.

(2) In addition to tube inspection, handhold plates should be opened to permit inspection of header baffle plates, orifice plates, drain locators, branch lines, inlet/outlets, elbows, thermometer wells, and other locations subject to high stresses or corrosion.

(3) Generally, removal of 5 percent of the handhold plates will suffice; however, if internal pitting or an excessive amount of scale is found, it may be necessary to remove all of the handhold plates for a complete examination.

(4) Scale deposits exceeding 1/32" in thickness will seriously impair heat transfer, especially in screen tubes and waterwall tubes, and may result in blistered and distorted tubes. Scale should be removed by mechanical means or by chemical washing.

(5) Examination of tube interiors is difficult in D-type boilers because the tube bends preclude sighting more than a short distance inside each tube. However, the tubes should be inspected from within the lower drum and, with the aid of a mirror, from the waterwall and superheater headers. The inside surface of the bottom drum should be examined for evidence of pitting; this is occasionally seen in boilers that have been out of service for long periods of time.

---

4. Examination of Hybrid Boilers

a. Hybrid boilers are very compact in their construction as a result of the design efforts to comply with size restrictions imposed by ship builders. They are considered to be auxiliary heating boilers, and their operating controls are regulated under 46 CFR 63.05 or 63.10, depending upon fuel consumption and rated heat output.

b. Tests. For test purposes, these boilers are considered to be of the firetube type and must be hydrostatically tested at least annually, per 46 CFR 61.05-10.

c. Fireside and waterside examinations. The limited access available for internal examinations of these boilers presents some unique inspection problems. Methods available to perform internal examinations are few and certain areas of these hybrid designs demand special attention by the marine inspector.

(1) The tube sheet ligaments, if accessible, should be thoroughly examined for cracks, especially near the furnace area. To the extent possible, the tube sheets should be examined for distortion or other indications of surface deterioration.

(2) Uptake/flue pipe between the top of the furnace and the lower tube sheet should be examined for possible yielding of the material caused by excessive heat either from normal firing with a low water level or extreme high firing rates for extended periods of time. The external pressure exerted on a horizontal cylindrical furnace or an uptake pipe will eventually cause the pipe to fail after being subjected to these conditions.

(3) The fireside of the furnace should be examined for brickwork damage or deterioration.

(4) All accessible waterside areas of the furnace should be examined for signs of pitting, cracks, and scale. A serious scale build-up or pitting on the furnace plate's waterside can be indicative of a poor boiler water treatment program.

(5) During the waterside exam, the furnace and shell surfaces in the vicinity of the ogee ring (and the ring itself) should be thoroughly examined. This area supports a majority of the load and is susceptible to very high stresses. If evidence of deterioration or distortion is found, nondestructive testing should be performed on the welds, which connect the ogee ring to the shell, and to the furnace. Any problem involving the ogee ring should be investigated from both the internal and external vantages, on the ring’s inner and outer diameters.

d. Stays. Boiler stays should be carefully examined for cracks, especially in way of the welds. Stays should be examined to detect "necking" or similar evidence of deterioration.

(1) One method to evaluate the condition of a boiler stay is to strike it with a hammer and listen carefully to the resulting sound. Generally, if the stay is in good condition, it will make a ringing sound when struck. A dull sound is indicative of a cracked or otherwise deteriorated stay and; a stay that produces a dull sound upon testing should be thoroughly inspected for defects.

(2) Other forms of nondestructive testing, such as dye-penetrant or magnetic particle, can be used to determine a stay's condition. When several stays in one area are found to be defective, the problem is nearly always due to uneven loading on the support structure, a condition that should receive immediate corrective action.

---

5. Repairs to Boilers

a. It is difficult to describe all of the types of boiler repair procedures that the inspector may have to consider.

(1) Boiler defects will seldom involve only certain specific areas. Severely pitted tubes will often be accompanied by pitting in headers or in steam and water drums. Similarly, a distorted corrugated furnace frequently is evidence of wastage of combustion chamber plates or adjoining furnaces.

(2) All repairs must comply with the requirements of 46 CFR Part 59.

b. Firetube boilers. In firetube boilers, close tube spacing limits visual inspection of the outside of the tubes is limited to the outer rows. Heavy scale buildup on these tubes is common, and thorough cleaning of the tubes, even by chemical means, is very difficult.

(1) In addition to pitting on the waterside, these tubes are subject to wastage of that part of the tube that projects beyond the tube sheet, particularly in the smoke box area. This condition is easily detected. When it is found, the defective tubes should be renewed.

(2) On the other hand, thinning of the tube walls due to corrosion can usually be discovered only by cutting out and sectioning tubes. This procedure should be followed only when a substantial number of the tubes are found to be leaking or plugged. In general, when tubes look satisfactory on the waterside, the boiler has no history of tube failure, and leakage can be corrected by rerolling, the tubes may be kept in service. Tubes from which the beading has been burned off should not be built up by welding, but must be renewed.

c. Watertube boilers. In watertube boilers, tube replacement is one of the most frequently encountered repair procedures. Boiler tube life is influenced by such factors as original wall thickness, thermal stresses due to location within the boiler, waterside corrosion, fireside damage, and service history of the boiler. The external surfaces of tubes are exposed to loss of metal from corrosion by sulfur and vanadium in the oil burned, as well as overheating and slag damage. Deterioration of this type may result in abnormal bends, bulges, blisters, ruptures, and mechanical fatigue

cracks that are fairly obvious during visual inspection of the firesides. The following procedures are recommended for inspection of boiler tubes:

(1) Conduct a visual inspection of all uncovered tubes.

(a) In general, when tubes look satisfactory from a visual inspection, they may be kept in service until some degree of failure is encountered.

(b) When the same type of tube failure occurs often, a major tube replacement should be considered. A number of failed tubes may be plugged in an operating boiler, generally not exceeding 10 percent of the tubes in any one tube bank, section, or pass. However, this 10 percent figure is for guidance purposes only, and any recommendations for tube replacement by the manufacturer's representative should be followed.

(c) Tube location is important in determining whether the tubes can be plugged. Superheater tube plugging should be limited to 10 percent of each pass. Renewal of tubes at less than 10 percent may be justified if the tubes in question are in a group or may cause poor gas flow or overheating. Defective support tubes should be renewed. Defective major circulating tubes, such as downcomer or riser tubes, should be replaced.

(2) If there is a suspicion that deep corrosion product scabs exist in waterside pits, or if any other condition prevents minimum thickness determination, chemical cleaning to bare metal should be required.

(a) If this process shows pits in a large number of tubes, and more than one or two in many tubes, a sample tube should be cut out of the boiler and sectioned and its minimum thickness determined.

(b) If the sample tube has deteriorated generally to less than 50 percent of the original thickness, a representative number of tubes (20-30) should be cut out of the tube bank and the process repeated.

(c) If more than half of the sample tubes are found to be in the same general condition of deterioration, consideration should be given to retubing the boiler.

---

6. Inspection of Boiler Mountings

a. Inspection of boiler mountings. The regulations concerning boiler mountings in 46 CFR 52.01-3 and 61.05-15 were written when more attachments were connected directly to the steam drum or boiler shell than in today's more modern boilers, which

have welded mountings. However, the intent and concerns of these regulations apply to modern boilers regardless of mounting types.

(1) The inspector should recognize the importance of all connections and piping to the first isolation valve. It should not be necessary to require removal of all first isolation valves to comply with the "mounting" inspection intent. All major valves, which are the first isolation or control of steam or feedwater, should be treated as "mountings" for inspection of the valve and piping toward the boiler.

(2) At a minimum, the following valves are subject to valve and mounting inspection requirements: main steam stop, generator steam stop, auxiliary steam stop, main and auxiliary feed stop, blowdown (surface and bottom), superheater vent, superheater drain, and soot blower stop.

b. Inspection criteria. The following inspection criteria must be observed during inspections of boiler mountings:

(1) 5-year valve inspection. This should be adequate to ascertain the condition of the valve body, adjacent piping, and valve condition to ensure isolation of the system down from the valve. The interval for opening and examination of boiler valves may be extended by the OCMI for a period of 1 year (12 months) to a maximum interval of not more than 5 years (60 months) since the last such examination, in order to coincide with the vessel's drydock exam or similar out of service availability period.

(2) 10-year mounting survey. This includes studs that are subject to high heat and stresses. Valves should be required to be removed if internal piping and valve conditions cannot be adequately examined from inside the steam drum or other open connections. The 8-year interval for boiler mounting examination (i.e., removal of boiler mountings, examination of mounting studs or bolts) may be extended by the OCMI for a period of up to 2 years (24 months) to a maximum interval of not more than 10 years (120 months) since the last such examination, in order to coincide with the vessel's drydock exam or similar out of service availability period.

(3) Studs. Boiler mounting studs must be manufactured in accordance with ASME Standard 193. Studs are heat treated and marked on one end with a grade and manufacturer's symbol. A common stud grade is "B7," which indicates a heat-treated, austenitic steel alloy for "high strength" bolting materials.

(a) Studs should be checked for proper heat number. The stud may be examined in place. If the stud is removed, it should be examined for cracks, "necking" down, or deterioration.

(b) If studs are bend tested, experience and sound judgment is necessary to determine whether the studs are brittle. Even a new stud will break at the notch of a thread when bent more than 30 degrees. Therefore, bend testing is not recommended.

(4) Flanged valves. When flanged valves are removed from the boiler pads for any reason, the condition of the studs or bolts that connect the valves to the pads must be determined.

(a) When valves are bolted to pads or spools that are riveted or welded to the boiler, the riveted or welded joints should not be broken unless there is evidence of leakage or deterioration. These examinations may also be made at intermediate periods if there is any evidence that defects have developed or that excessive corrosion has occurred.

(b) When one or more flanged joints intervene between a stop valve and the boiler drum or superheater outlet, such flanged joints need not be opened at the time the valve is removed from its flanged joint. An inspector may open a flanged joint at any time if the inspector considers examination to be necessary.

c. Removal of mountings and attachments on high-pressure boilers. The requirement to remove boiler mountings at 8-year intervals has been modified for certain vessels with unusually high steam pressures. This modification has been permitted due to the difficulty of attaining a steamtight joint and the fact that some valves are welded directly to the steam piping.

(1) For these vessels, only the bonnets of the valves need be removed to permit the inspection required at 10-year intervals. Valves, mountings, and attachments need not be removed unless defects are found that require their removal for further examination, repair, or replacement.

(2) Credit must be given for an 8-year boiler mounting inspection for these vessels if the boiler valve bonnets are opened and the inspector is satisfied with the examination.

(3) A mirror must be used to check all inaccessible parts of the mountings.

(4) A record of the inspection of the mountings must be made on Inspection Book, CG-840 and a notation made on the COI. This notation must be carried on each succeeding certificate until the next inspection.

d. Boiler safety valves. Testing of boiler safety valves is typically conducted at the inspection for certification. Extensions are not authorized for the testing of safety valves. In most cases, the testing of these devices can be accomplished without taking

the vessel out of service. Proving satisfactory operation of boiler safety valves is now especially important given the potentially increased intervals between boiler internal examinations and hydrostatic tests.

(1) The inspector must observe the lifting and reseating pressures of the boiler safety valves and examine the valves to determine if there are any signs of weakness or malfunctioning. Whenever evidence of leakage appears, the inspector may require the safety valves to be opened at intermediate periods for examination. The inspector must carefully check the setting of each boiler drum and superheater safety valve and require any adjustments necessary to maintain the boiler within MAWP.

(2) Inspection of piping. The safety valve escape piping must be examined for freedom of expansion and proper drainage. At the time the safety valves are tested, the inspector must also ascertain if the drain opening in the valve body and the escape piping are free. Improper drainage or plugged drains may result in serious corrosion of the valve body and internal parts.

(a) The inspector must examine the boiler casings to ascertain that there is no accumulation of soot, ash, or scale that may drop into the escape piping and cause malfunctioning of the safety valve.

(b) The inspector may require the discharge connections to be removed to determine the freedom of discharge from the safety valves.

e. Cast-iron valves, water columns, test clocks, and gauges. The inspector must carefully examine water columns and gauge glasses at each annual inspection.

(1) The inspector must ascertain that water cannot accumulate in the pipe forming the steam connection to the water column. The connections to the boiler should be free, as indicated by the action of the water in the glass.

(2) The water columns and gauge glasses must be blown down on each boiler to determine the freedom of the connections to the boiler and to see that the blow off piping from the water columns and gauge glasses is free.

(3) The operating condition of the gauge cocks must be determined by test.

(4) All steam gauges on the boilers and main steam lines must be checked for accuracy with a standard test gauge.

---

7. Inspection Procedures for Externally Fired Lap Seam Boilers

a. Before inspections. Before inspection, all lagging or other material covering longitudinal lap joints must be removed on the entire length of the seam to a width of at least 4 inches from the nearest course of rivets, after which the seam must be thoroughly scaled and wire brushed outside (and inside if possible).

(1) All deposits of electric welding, whether on rivets or plates, must be entirely removed.

(2) The joints must then be thoroughly examined for indications of grooving or other defects.

(a) Grooving in the initial stages is characterized by a line of irregular surface cracks extending along the caulking edges or running parallel with the line of rivets, and is particularly noticeable on the waterside.

(b) When grooving is evident, steps should be taken to ascertain its depth and extent so that a lower working pressure may be calculated, based on the premise that the groove exceeds the maximum measurable depth by 10 percent.

b. During inspections. During inspection, and while the boilers are under full hydrostatic stress, the exposed seams must be shock tested over their entire length by striking the plates in the vicinity of the rivets with a smooth-headed hammer weighing at least 7 pounds. Should this procedure reveal a leak, however slight, in the solid plate, it means there is a crack. In this case, the lap seam must be cut away and butt straps installed or the shell plate renewed.

c. Fusion welding. Fusion welding for any purpose or to any degree must not be applied or allowed to remain on rivets or solid plate forming a longitudinal lap joint. Should leaks develop as a result of slack seams or rivets, a sufficient number of rivets must be renewed in order to obtain a tightly caulked joint.

(1) Rivet removals, when necessary, should be accomplished by chipping off the rivet points (heads) and driving out the shank, but never by burning.

(2) In every case where rivets are removed, appropriate nondestructive testing should be used to detect the presence of cracks. Seams found to be satisfactory may be relagged or otherwise covered so that the covering can be easily removed intact at subsequent inspections.

d. Reports of defective seams. Commandant (CG-CVC) must be provided with a detailed report, including photographs, if obtainable, in each case where defective seams are detected.

e. Alternative repair methods. Should a departure from these methods of repair become necessary, full details must be transmitted to Commandant (CG-CVC) for approval before alternative action is taken. A separate entry must be made on Inspection Book, Form CG-840 in each such case, indicating that the foregoing procedures have been carried out. A statement of the conditions found and the nature and extent of repairs, if any, must be included.

---

8. Lessons Learned About Boiler Operation

a. Explosions in firetube boilers. Facts discovered during the CAPT C. MATHIASEN investigation indicated that a weakened condition of the flanged plate, forming part of the combustion chamber, escaped detection during the annual inspection.

b. It is evident that hydrostatic and hammer tests alone are not sufficient to establish the integrity of a boiler for continued service. Defects that show up under hydrostatic tests can easily be observed from the outside or fireside of conventional boilers. Often, however, the most serious defects are indicated only by the surface condition of the plates or other parts seen from the waterside or steamside. Some of these interior defects are:

(1) Grooving, which is usually found along the edge of lapped plates and on the underside of the first corrugation forming the horse collar of Morison-type furnaces; and

(2) General deterioration of plates and stays caused by corrosion, which is often concealed by a thick layer of scale.

(c) The extent to which these defects have advanced can be determined only through most careful examination after the boiler has been thoroughly scaled and cleaned.

---

9. Superheater Erosion

a. Inspection procedures. When inspecting boilers that have superheater headers installed vertically or nearly vertically, the inspector must use all means available to determine if there is grooving or pitting of the header in the area of the baffle. This examination should include the use of mirrors and finger touch, as necessary.

(1) If serious pitting or erosion is found in such superheater headers, the drain holes should be relocated in the baffle near the center thereof and the original holes welded closed.

(2) Whenever pitting or erosion is noted, necessary repairs should be made to prevent a potential boiler casualty.

b. Cast-iron and malleable iron valves. Failures of cast-iron boiler valves used in main and auxiliary steam feed and blow off lines installed prior to 1 July 1935 have resulted in a number of serious casualties and deaths.

(1) Because of the thinning down of the valve bodies due to corrosion and wear, with a consequent decrease in the factor of safety, cast-iron valves and fittings used in

boiler mountings and in steam feed and blow off lines should be subjected to thorough examination, particularly at the time of the annual inspection. Since the brittle properties of cast iron may produce fractures under conditions of shock and sudden applications of load, such as "water hammer" and rapid changes in temperature, cast-iron valves and fittings should be carefully and thoroughly examined for cracks and corrosion defects at the time of inspection.

(2) Inspection procedures. At the end of the 4-year period when boiler mountings are opened and the end of the 10-year period when they are removed, in accordance with 46 CFR 61.05-15, cast-iron valves and fittings should be subjected to a thorough visual inspection, both internally and externally.

(a) The valve bodies should be inspected to ascertain whether there has been a reduction in wall thickness below the requirements specified in 46 CFR 56.60-10. If the thickness of the material has fallen below the specifications, such valves and fittings should be removed from service.

(b) Special consideration should be given to installations in which cast-iron valves and fittings have been repaired or have had parts replaced or altered. The bodies of cast-iron valves and fittings should not be tapped for drainage or bypass connections, etc., except when a boss has been cast integral with the valve.

(c) Because cast iron and Grade B malleable iron have somewhat similar properties, valves of this latter material should receive the same thorough inspection as required for cast iron.

d. Steam piping to soot blowers. In one reported casualty, a 600 psi steam supply line to the soot blower elements ruptured, causing serious injuries to the person who was blowing tubes. Examination of the ruptured pipe showed that the rupture occurred in a bend where erosion had, over a period of years, virtually eaten away the pipe from the inside. During periodic inspections, particular attention must be given to areas where erosion or corrosion is likely to occur in soot blower piping. The location of these areas can best be determined from a visual examination of the piping installations aboard the vessel.

H. INSPECTION OF AUXILIARY MACHINERY AND EQUIPMENT

The purpose of tests and examination of auxiliary equipment is the same as for main equipment. Inspectors need to ensure that auxiliary equipment will operate safely at the design pressure, temperature and condition for a specified minimum period of time.

1. Turbine Driven and Diesel Driven Auxiliary Machinery

Overspeed trips, low-lube oil pressure trips, and low-lube oil pressure alarms of turbine or diesel driven auxiliary generators should be tested at each inspection. Other turbine driven auxiliary machinery, e.g., feed pumps, fire pumps, etc., should be examined under operating conditions to ensure proper functioning of the local and remote startup and shutdown controls, as well as speed controls under various load conditions.

NOTE: Any operational tests of lube oil shutdown controls should not risk shutting off the oil supply to the bearings.

2. Steering Gear

See MSM Volume II, Material Inspection, COMDTINST M16000.7A (series), Chapter C4 for guidance on inspections of steering gear.

I. INSPECTION OF PIPING SYSTEMS

1. General Considerations

The inspector should be generally guided by 46 CFR Subchapter F and ANSI B31.1 for the inspection of piping systems. The inspector should pay particular attention to material type and rating, pipe securing arrangements, couplings, and alignment. The material and equipment must be suitable for the service intended and meet melting point, ductility, strength, and compatibility requirements for the system. Piping must be well secured to reduce vibration and stresses. Couplings must be suitable for the pressure and service. Proper alignment of piping systems should also be checked. See MSM Volume II, Material Inspection, COMDTINST M16000.7A (series), Chapters B3 and C2 for information regarding expansion joint and dresser coupling requirements.

2. Test and Examination Intervals

The hydrostatic test interval for firetube boilers' main steam piping must be in accordance with the intervals permitted in Paragraph H.2 of this Chapter. The hydrostatic test interval for watertube boilers' main steam piping must be in accordance with the intervals permitted in H of this chapter. Hydrostatic testing of steam piping subject to main boiler pressure, other than main steam piping, may be extended 1 year (12 months) to an interval not to exceed 5 years (60 months) since the last hydrostatic test.

3. Safety and Relief Valves

The inspector must observe that the safety or relief valves installed on reduced-pressure lines, evaporators, and feedwater heaters operate satisfactorily. These valves must be tested to determine their ability to prevent the build up of excessive pressures before the shutoff valve can be closed. A functioning safety or relief valve should serve as a warning in the event of failure of the reducing valve. The settings of such valves must be checked at each inspection and adjusted if necessary.

4. Internal Bilge Suction Valves

a. Internal valves are required to be installed on bilge suction lines on passenger vessels by 46 CFR 56.50-50. They are not required on cargo or tank vessels, but are fitted, in many instances, as an additional safety measure.

(1) These valves often consist of screw-down valves that, in many instances, become frozen in the open position. In some collisions and groundings, damage to the

vessels could have been greatly reduced if the proper precautions and maintenance had been taken with internal valves. Often, the initial damage was confined to one watertight compartment but because internal valves had been left open, other compartments were flooded, cargo holds were damaged, and personnel were endangered.

(2) In the course of some investigations, it was reported that no officers knew the purpose of the valves, or even that they existed.

(3) The inspector must check such valves and require them to be operable, whether or not the valves are required under 46 CFR 5 6.50-50. The inspector must also ensure that the ship's officers understand the purpose of these valves.

b. Neutralizing valves or incapacitating remotely operated valves. Should the operator of a cargo vessel equipped with remote control suction valves in bilge suction lines wish to remove these valves or render them permanently inoperable in the open position, the operator may do so through one of the following procedures:

(1) Removing the remote control rod, operating wheel, and suction valve and replacing the valve with a spacer of equivalent size.

(2) Removing the remote control rod, operating wheel, remote control suction valve bonnet, valve disc, body seat ring, and guide bridges and replacing the valve bonnet with a steel cover plate of appropriate size.

(3) Removing the remote control rod, valve stem, and disc and installing a screwed plug or bolted gasket and washer over the stuffing box hole to create a tight valve bonnet.

---

5. Cargo and Vital or Critical System Piping Repairs

Repairs to cargo and vital or critical system piping systems are classified as emergency, temporary, or permanent in nature. Emergency repairs are made to permit the completion of cargo discharge. Temporary or permanent repairs must be required prior to loading of another cargo. Temporary repairs may be acceptable for isolated defects in otherwise good piping; such as a pit. Temporary repair methods include the use of substantial pipe clamps, repair sleeves, and similar devices capable of withstanding operating pressures and temperatures. Permanent repairs are made by an isolated welded doubler or renewal in kind, and are required upon the next gas-freeing or repair period, whichever is sooner. Generally, piping with a localized, isolated defect and otherwise in good condition may be repaired permanently with a doubler.

NOTE: Piping restored to service by any of these methods should be appropriately tested upon completion of repairs.

6. Fuel Piping Systems

Fuel supply and service piping, including piping provided by engine manufacturers, should be carefully inspected. Fires have resulted from the cracking of fuel supply lines and injector couplings due to vibration. All fuel systems should be checked for proper mounting, expansion joints, filter arrangements and spray shields.

J. ELECTRICAL INSPECTIONS

1. Introduction

At each inspection for certification, the inspector must examine the vessel's electrical equipment and apparatus, the arrangement and materials of the installation, and the operating condition of the installation as required by the regulations. The main purpose of electrical inspections is to ensure the adequacy and reliability of shipboard electrical systems, to improve personnel safety by minimizing electrical shock hazards, and to minimize the danger of fire originating within the electrical system.

2. Scope of Inspection

The scope of the electrical inspection is detailed in 46 CFR 176.25-15 for small passenger vessels and in 46 CFR 110.30 for other vessels. The inspection includes the examination and testing of electric generators, motors, wiring circuits, junction boxes, fixtures, and other electric installations. No electrical repairs or alterations affecting the safety of the vessel, its equipment, and crew may be made without the knowledge and approval of the OCMI. Drawings must be approved before work is started when the repairs will involve alterations. See MSM Volume II, Material Inspection, COMDTINST M1600.7A (series), Chapter A4 for more information concerning the inspection of electrical equipment used on vessels.

3. General Applicability and References

The standards for the inspection of electrical installations on all vessels except small passenger vessels are contained in 46 CFR Subchapter J. As indicated in 46 CFR 110.10, these regulations are supplemented by recognized specifications, standards, and codes. 46 CFR Subchapter J applies to small passenger vessels only insofar as they are made applicable by 46 CFR Part 183. Vessels contracted for prior to November 19, 1952, are not fully subject to the requirements in 46 CFR Subchapter J. The electrical installations on these older vessels may be maintained as long as their condition is satisfactory to the OCMI, unless amended regulations specifically apply to these vessels. However, major alterations or extensions to such electrical installations must be made according to the requirements of 46 CFR Subchapter J. Additional reference material can be found in the Institute of Electrical and Electronic Engineering (IEEE), American Society for Testing and Materials (ASTM), American National Standards Institute (ANSI), National Electric Code (NEC), International Electrotechnical Commission (IEC), the old 46 CFR Subchapter J (pre-June 1996 editions), NVIC 2-89 Guide for Electrical Installations on Merchant Vessels and MODUs, NVIC 9-84 Electrical Installations in Agricultural Dust Locations, and Underwriters Laboratory Inc. (UL) Publications.

---

4. Initial Electrical Inspections

a. When carrying out tests and inspections prescribed in 46 CFR 110.30, the inspector must pay particular attention to the items detailed in the following paragraphs. These tests and inspections should be completed at the discretion on the marine inspector and/or the OCMI.

   (1) Extreme caution must be exercised during all inspections and tests. Inspections and tests will be conducted by the shipbuilder, the owner, or the owner's representative and observed by an inspector. Test and inspection data must be recorded and obtained for checking and reference purposes.

   (2) For more detailed plan approval information, see MSM Volume IV, Technical, COMDTINST M16000.9 (series).

b. Electrical cable. Electrical cable must be checked during installation for size and type as shown on the approved plans. The adequacy of cable supports must also be checked.

   (1) Cables should not be located near pipes and hot objects, and they should not have been damaged during installation by excessive pulling, sharp bends, sharp or rough edges of cable supports or bulkhead penetrations, or similar conditions.

(2) Cable penetrations required to be watertight should be checked for proper packing of terminal or stuffing tubes, including areas provided for future take-up of gland units.

(3) Cable penetrations through Class A and Class B bulkheads and decks should be checked for compliance with approved methods.

c. Insulation resistance. All electric power and lighting cables, generators, and vital systems motors must be checked for proper insulation to ground and between conductors.

(1) The insulation resistance measuring instrument (megger) used should be of the 500 volt, direct-current type, except for equipment where the normal operating voltage is less than 100 volts, in which case a direct reading ohmmeter of the appropriate voltage should be used.

(2) Insulation resistance varies considerably with humidity, amount of exposed copper, etc. Therefore, it is difficult to establish firm rules to guide the inspector. Generally, Figure B1-4 should be used as a guide in determining minimum acceptable values of insulation resistance. Ordinarily, on a dry day and with new, clean equipment, resistance should not be less than the values indicated in the figure. The insulation resistance in megohms must be at least equal to that determined by the formula in Figure 6-4.

d. Group control panels. When two or more motor controllers are grouped into a central panel and supplied by a common feeder, the panel must be checked for compliance with the requirements of 46 CFR 111.70.

(1) Each controller, its associated motor overcurrent protective device, its motor branch circuit overcurrent protective device, and disconnecting mechanism must be mounted in a common enclosure with a disconnect device that prevents the door from being opened when the circuit is energized. The enclosure must be either drip-proof or watertight, depending on its location.

(2) Adequate working space should also be provided. This generally should be no less than 76 cm (30 in) in front of the enclosure and in no case less than 18 inches in the rear when access to the rear may be necessary.

FIGURE B1-4
INSULATION RESISTANCE

GENERAL INSULATION RESISTANCE FORMULA FOR VITAL MOTORS AND GENERATORS

$$R \text{ (In Megohms)} = \frac{E}{KVA + 1{,}000}$$

100

Where: E = Rated line to line voltage of the machine.

KVA = Rated kilovolt amperes.

GENERAL RESISTANCE TABLE FOR CABLE1

MINIMUM CIRCUIT	INSULATION RESISTANCE
0 – 5 amperes, inclusive	2.0 megohms
6 – 10 amperes, inclusive	1.0 megohms
11 – 25 amperes, inclusive	400,000 ohms
26 – 50 amperes, inclusive	250,000 ohms
51 – 100 amperes, inclusive	100,000 ohms
101 – 200 amperes, inclusive	50,000 ohms
Over 200 amperes	25,000 ohms
The values for a circuit should be determined with the circuit de-energized, with all switches or circuit breakers connected in the circuit closed, and with all panelboards, controllers, fuses, and fuseholders in place.	

e. Generators. Generators must be checked for general condition (both electrical and mechanical), voltage regulation, parallel operation, operation of safety devices such as reverse-current or reverse-power trips, overcurrent trips, overspeed trips, low-oil pressure trips, and similar devices (see 46 CFR 111.12).

f. Rotating electric machinery. Rotating electric machinery must be checked to ensure that rotating and uninsulated electric parts are adequately shielded from accidental contact by personnel. Nameplate data must be examined for correct ratings for the particular application (see 46 CFR 111.01 and 111.25).

g. Switchboards. Switchboards must be checked for nonconducting handrails, guardrails, working spaces, insulating floor coverings, drip covers, and shields.

(1) Switchboard enclosures must be checked for proper construction in accordance with 46 CFR 111.30.

(2) Switchboard mounted apparatus must be checked for identifying nameplates.

(3) Circuit nameplates must be compared with the rating or setting of the overcurrent devices and with approved plans.

(4) The accessibility of items requiring maintenance or adjustment must be checked.

(5) Meters must be checked for proper operation.

(6) The operation of automatic switchgear and interlocks must be observed (see 46 CFR 111.30).

h. Panelboards. The rating or setting of the overcurrent devices must be compared with the values given on the circuit directory and the approved plans. The accuracy of the directory description of loads served by each circuit must also be checked (see 46 CFR 111.40).

i. Motor starters. Motor starters must be checked to ensure proper starting under service conditions with properly rated motor overload protective devices.

(1) Enclosures must be checked to ensure that they are drip-proof or watertight and that required door positioners are installed on doors with a height of more than 45 inches or a width greater than 24 inches.

(2) A fixed heat-resistant wiring diagram for each motor starter must be on the inside of its enclosure door.

(3) Each motor starter not disconnected from all sources of potential when the disconnect switch is opened, due to electrically interlocked circuits that are necessary for proper operation of the apparatus or for other valid reasons, must have a warning sign directing attention to these conditions (see 46 CFR 111.70).

j. Disconnect switches. The presence and location of disconnect switches required for motor starters, fuses, etc., must be checked. When a switch or circuit breaker is intended to serve as a motor and controller disconnect switch, the inspector must ensure that the applicable requirements have been met (see 46 CFR 111.55 and 111.70 and National Electrical Code Article 430, Part H).

k. Accessibility. The inspector must observe the accessibility of electrical apparatus for inspection and maintenance.

(1) The inspector must also note the accessibility of junction boxes and similar apparatus in way of paneling.

(2) The inspector must check hinged doors of motor starters and similar apparatus for interference with adjacent structural parts or apparatus.

l. General alarm systems. The inspector must check the general alarm system with a sound level meter and measure the sound level of the bells in each stateroom with the doors closed. Where the background noise level is questionable, the sound level should be measured while the vessel is underway (see 46 CFR 113.25-9).

m. Electric installations in hazardous locations. During the initial inspection for certification, the inspector must check the emergency loudspeaker system with a sound level meter at each lifeboat handling station, each lifeboat embarkation station, each passenger assembly station, and throughout the crew's quarters. Where the background noise level is questionable, the sound level should be measured while the vessel is underway or the required sound levels.

n. Emergency loudspeaker systems. The inspector must check electric equipment and wiring in hazardous locations for compliance with 46 CFR 111.105.

(1) Intrinsically safe systems must be checked to ensure that they are installed in accordance with the plans and instructions required by 46 CFR 111.105-11.

(2) Equipment required to be explosion-proof or intrinsically safe must also be checked for proper Underwriters Laboratories, Inc. (UL), Factory Mutual Research Corporation (FM), Canadian Standards Association (CSA), or MET Electrical Testing Company (MET) labels.

o. Steering gear circuits. Steering gear circuits must be separated. Steering gear motor controllers must be located in the steering gear room.

p. Emergency firepump circuits. Circuits for emergency firepumps must not pass through the engine room or boiler room.

q. Low voltage release tests. The inspector must determine that motor controllers have low voltage release and that motor controllers prohibited from having low voltage release have low voltage protection.

(1) All motors should be run simultaneously and all generators then tripped off the line. One generator should be placed back on the line; it should not trip because of the oncoming load.

(2) Motor controllers requiring low voltage release should re-start their motors automatically; those prohibited from having low voltage release should not re-start their motors automatically. If the motor load exceeds the total ship's service generating capacity, this test should be conducted with all motors that have low voltage release and sufficient motors with low voltage protection, adding up to the total generating capacity running.

(3) A second test must then be conducted with the remaining motors; none of the motors in this second test should start automatically.

---

4. Equipment

a. Miscellaneous electrical. The Coast Guard no longer grants type approvals for miscellaneous electrical equipment. Electrical equipment can be divided into the following categories, although some equipment approvals may require a combination of categories:

(1) Required to be approved. Equipment that is required to be approved is listed in Subchapter Q and will have an approval number assigned.

(2) Required to meet various standards. Equipment that is required to meet various standards is discussed in Subchapter J. It is important to note that the requirement is to meet the standard, not to be listed by a listing service. The burden of proof that the standard is met rests with the manufacturer.

(3) Having specific requirements in Subchapter J. The index following Subchapter J may be used to identify if certain equipment must satisfy additional 46 CFR requirements.

(4) Required to be explosion-proof or intrinsically safe. Equipment required to be explosion-proof or intrinsically safe must be listed by UL, FM, MET, or CSA.

---

5. Subsequent Electrical Inspections

a. In subsequent tests and inspections, inspectors must pay particular attention to the items listed in this section of the manual. The inspector must determine mechanical and electrical conditions, performance, safety of personnel against shock hazards, and safety of the vessel from fire hazards.

b. New and modified circuits. The inspector must give special attention to circuits and equipment added or modified since the last inspection to determine that they comply with the regulations.

c. Navigation lights. The inspector must examine navigation lights for corrosion of materials and for satisfactory condition of portable cable and receptacles. Navigation light panels must be tested for satisfactory operation and proper functioning of alarms.

d. Lifeboat winch electrical equipment. All enclosures for electrical lifeboat winch control equipment, such as limit switches, master switches, and emergency disconnect switches, must be opened and examined for evidence of water or corrosion.

(1) In particular, the inspector must pay attention to the proper functioning of limit switches and emergency disconnect switches in the control circuits of lifeboat winches. Casualty investigations have indicated the need to specifically examine the clutch interlock switches on dual winches, such as those on Victory-type cargo ships.

(2) It is essential that satisfactory limit switches and emergency disconnect switches be used with gravity davits and power-operated winches. Therefore, a test operation of the lifeboat winch controls, including limit switches, emergency disconnects, and clutch interlocks where employed, must be conducted at each annual inspection.

e. Watertight doors. The inspector must thoroughly check the watertight door systems to verify that they are in satisfactory operating condition.

(1) The enclosures for all local control door switches and controllers should be examined for evidence of water or corrosion. It has been found that seawater entering the local control switch located at the watertight door may cause faulty operation of electrically operated watertight doors. If seawater has entered the switch enclosure, it may short circuit the motor starter and motor so that the door opens even with the wheelhouse control indicating the closed position.

(2) To the extent practical, the inspector must also be satisfied that the ship's personnel are familiar with the watertight door system, location of disconnect switches, etc.

f. Electrical cables. The inspector must determine condition of cables by insulation resistance readings and by visual observations. Deterioration of the armor of a cable that is otherwise in good condition is not considered sufficient cause for requiring replacement.

g. Ground detection systems. Ground detection systems should function properly. Where lamps are used, they should be of the proper wattage with the connections between the lamps grounded. Ground faults must be cleared.

h. Temporary wiring and installations. Long extension cords, jury-rigs, or temporary modifications are not satisfactory installations.

i. Portable electric equipment. New and replacement items must meet the Coast Guard requirements. Existing equipment must be serviceable and free from potential shock or fire hazards.

(1) Metal bodies of these items must be grounded through grounding leads in the portable cord. To be effective, the grounding conductor on a tool or light must be connected to a grounding terminal. This conductor must be electrically continuous (the wire should not be broken anywhere along its length); this can be checked with an ohmmeter or megger.

(2) For portable devices made entirely of nonconducting material, or so constructed that dead metal parts will not become energized under any condition (double insulated construction), the grounding conductor in the portable cord and the grounding pole of the attachment plug need not be furnished. No splices or patching should be permitted in portable leads smaller than No. 12 American Wire Gauge (AWG). Splices must be in accordance with 46 CFR 111.60-19.

(3) Careful checks must be made of the condition of the cord where it enters the light or tool. This is a location of severe stress and bending fatigue, especially on items such as portable cargo lights. Cracking, brittleness, and heat discoloration of the cord at this point are sufficient reasons for rejection. If the device is to be rewired, only cords indicated in 46 CFR Table 111.60-13 for hard or extra-hard service should be used.

(4) Lighting fixtures should be examined to see that the interior insulation is satisfactory, particularly the lamp holder. Cracked porcelain or plastic lamp holders should be replaced. Devices in which the exterior case is cracked or damaged should be replaced or repaired.

j. Fire and smoke detection systems. Fire and smoke detection systems must be checked regularly, and faulty detectors must be recalibrated or replaced. The following test methods may be used:

(1) Thermal detectors. Thermal detectors may be tested by replacing the guard and globe with a sheet metal shield and using a portable light as the heat source; this will not cause damage to the adjacent paintwork. The activation temperature range should be as specified in 46 CFR 161.002-11.

(2) Photoelectric and ionization smoke detectors. Photoelectric and ionization smoke detectors may be tested by holding pink sticks or other smoke source near the detector.

(3) Infrared detectors. Infrared detectors may be tested with a candle or other flame source. Infrared detectors often have a response delay.

k. Vital machinery. Motors, motor starters, and control switches used with machinery vital to the safety or propulsion of the vessel must be visually examined for condition and suitable nameplate ratings. When there is evidence of deterioration, they must be opened for closer inspection.

l. Electrical cooking equipment. Electrical cooking equipment must be maintained in good condition. There should be no evidence of grease or dirt buildup or deterioration of the equipment.

K. LEAKAGE ONTO PROPULSION CONTROL CIRCUITS, SWITCHBOARDS, ETC.

The 1974 casualty to the tank vessel TRANSHURON was caused by water spraying onto the main propulsion control area from a failed cooling water gauge nipple for the vessel's air conditioning system. In another similar casualty, water leaked onto a vessel's main switchboard from an exterior electrical junction box that had filled with water. The conduit and wire provided the path to the switchboard. These casualties demonstrate that shielding or other measures must be used to guard against accidental discharge of water onto electrical propulsion installations. All water lines must be located clear of control circuits, electrical equipment, and areas of high voltage whenever possible. Cables to switchboards, controllers, etc., should be connected so as to prevent water from entering connectors, through use of drip loops, joining cables to the bottom side of the installation, or similar methods.

L. EMERGENCY LIGHTING AND POWER SYSTEMS

1. Introduction

Casualty reports indicate that, in some instances, emergency diesel generators and associated equipment are not maintained in a satisfactory state of readiness for emergency use.

46 CFR 35.10-15, 78.17-45, and 97.15-30 require vessel personnel to periodically test installed emergency lighting and power systems and record the results in official logbooks. The regulations for tank vessels, passenger vessels, cargo and miscellaneous vessels, and the electrical engineering requirements require testing of emergency lighting and power installations to occur in the presence of an inspector.

Testing of a properly functioning emergency plant can be accomplished quickly, with little or no interruption of normal service. 46 CFR Table 112.05-5(a) notes which vessels required are to have an emergency source of power that meets the requirements of 46 CFR 112. Also, see NVIC 2-89 Electrical Installations on Merchant Vessels and MODUs.

2. Testing

At each inspection, and whenever emergency drills are conducted, light and power emergency systems must be tested as follows:

a. Automatic starting and connecting power systems. Automatic starting and connecting power systems should be tested by using the test switch. When the switch is put in the test position, the following should occur in less than 45 seconds:

   (1) The Bus-tie breaker should open.

   (2) The power source should automatically start (if the power source is a battery, this step will be skipped).

   (3) The required loads should be transferred to the emergency power source when the voltage reaches 85-95 percent of final value, i.e., the generator circuit breaker closes. This will happen immediately for a battery source. Upon completion of the test, loads should be transferred back to the normal source and the emergency system set up for automatic operation.

b. Manual transfer system. For a manual transfer system, test as indicated above, except that step 2 will occur as the result of a manual action. All other functions remain automatic.

c. Alarm relay circuits. When conducting operational tests of the emergency diesel generator for initial certification or after modifications have been made, inspectors should have the shipboard personnel conducting the test temporarily disconnect any remote alarm relay circuits. When this is done, the emergency diesel generator should continue to function. If the generator fails to operate with the remote alarm relay circuits disconnected, the inspector should issue a requirement to modify the

installation to allow operation of the emergency diesel generator with these circuits disabled. At the conclusion of this test, the inspector should ensure that remote alarm circuits are properly reconnected.

d. Alternatives. Some passenger vessels contracted for prior to 19 November 1952 may not be arranged for testing as outlined above. Tests of such vessels should be performed in a manner compatible with their arrangements.

(1) Many older vessels have an inport or standby generator (and no emergency plant, as such). These are usually arranged to feed directly to the main switchboard, and cannot be tested in the manner outlined above.

(2) The testing of such standby units must be prescribed by the OCMI.

M. INSPECTION OF RADIO EQUIPMENT

1. General Practices

a. Cooperation with the FCC. When the OCMI is notified by representatives of the Federal Communications Commission (FCC) that a vessel’s radio installation contains technical deficiencies, the Safety Radiotelephony or Radiotelegraphy Certificate should be withheld until the deficiencies are corrected and the OCMI receives formal notice to that effect from the FCC.

b. Interagency resolution of deficiencies. In cases where technical deficiencies exist in a vessel's radio installation on a vessel already in possession of a Safety Certificate, the OCMI must withdraw the certificate upon the FCC's request.

(1) Inspectors should consult with local FCC representatives before taking action in such circumstances, and must cooperate fully with FCC inspectors to carry out the intent of these instructions.

(2) The COI should not be withheld or withdrawn for technical deficiencies in radio installations.

c. The inspector should remember that the technical adequacy of the radio installation, the suitability of electrical wiring to interconnect components of the radio, and the proper maintenance and efficient operation of the equipment are determined solely by FCC inspectors.

(1) The suitability of power leads from the main power supply to the main installation in the radio room is solely the responsibility of the Coast Guard. All electrical wiring in the radio room not connected with the radio installation itself is under the sole jurisdiction of the Coast Guard.

(2) The amount of power and character of the supply, however, must be determined by the FCC to operate the radio installation and its auxiliary equipment properly and efficiently. The FCC will notify the OCMI of any observed inadequacies in the power supply; the OCMI must ensure that such deficiencies are corrected.

d. See MSM Volume II, Material Inspection, M16000.7A (series), Chapter E2 regarding Safety Radiotelegraphy and Safety Radiotelephony Certificates, and MSM Volume II, Material Inspection, COMSTINST M16000.7A (series), Chapter C2 regarding portable lifeboat radio equipment.

e. See Table 47 CFR Part 80, for general information and citations regarding FCC regulations.

2. Emergency Radio Gear

The installation of all ship's radio equipment must be approved by the Coast Guard. The inspector must be satisfied that the main and emergency radio installations are located in the superstructure of the ship, as high as is practical above the highest marked load line. The emergency installation must be provided with a source of power independent of the propulsion and main electrical systems; it must be capable of being energized rapidly and operating continuously for at least 6 hours.

NOTE: Use of the emergency radio power for other than radio equipment and emergency lights in the radio room is prohibited.

N. HAZARDS AND UNSAFE PRACTICES

1. Introduction

The following guidance is intended to promote the detection, reporting, and correction of those practices and situations that tend to cause injury or death to personnel and damage to the vessel or its cargo. Safety considerations based on good marine practice are directly

related to the equipment and construction to which attention is directed by the regulations, and for which separate reports are required. Obviously, a vessel with defective cargo gear, dangerous gangways or access ladders, unguarded openings in the holds, poorly lighted working spaces, or similar hazards should not be determined to be suitable for service. Traditionally, it is the duty of the vessel's officers to see that dangerous conditions are corrected immediately. Aspects of good marine practice may not always be spelled out in statutes or regulations; doing so is sometimes impractical. Practices of good seamanship and good shipkeeping will vary according to the size, design, and operating conditions of a particular vessel. However, it is of paramount importance that general safety considerations are kept in mind aboard vessels at all times. When hazardous conditions are noticed, immediate steps must be taken to keep working conditions as safe as reasonably possible.

---

2. Statutory Requirements

Congressional statutes regarding safety of life and property on board vessels apply at all times when a vessel is in service, whether alongside the dock, anchored, or underway. The statutes in 46 U.S.C. Chapter 33 authorize the Coast Guard to inspect ships periodically for safety purposes.

---

3. Responsibility of the Crew

The master and other ship's officers are responsible for maintaining safe working conditions. They are also responsible for supervising or establishing proper supervision of all employees aboard a vessel. A competent ship’s officer must supervise all hazardous work. Any ship’s officer who is inattentive to duty or negligent in permitting unsafe conditions or practices should be admonished. If the situation is sufficiently severe, the failure should be charged against that officer's license. The primary objectives are to improve safety and to indoctrinate ship's officers in their responsibilities. However, all persons employed aboard have a mutual responsibility to carry out established procedures for the safety of themselves and their fellow mariners.

---

4. Responsibility of the Coast Guard

A marine inspector or other Coast Guard boarding officer should be alert to unsafe practices and hazardous situations when aboard an inspected or uninspected vessel for any purpose. The inspector must take proper and immediate action to have unsafe practices stopped and hazardous situations remedied. Such action will, of course, vary according to the situation. In many cases, calling the attention of the ship's officers or master to the situation will be sufficient. In certain instances, it may be necessary to issue a Vessel/Facility Inspection Requirements, Form CG-835 to cover a deficiency. Serious cases, or those in which there is disagreement over the proper course of action, should be brought to the attention of the OCMI immediately. Revocation of the vessel's COI, action against an officer's license, or submittal of a Report of Violation should be undertaken when necessary. To ensure the greatest possible degree of safety on vessels operating in their jurisdiction, an OCMI must give personal attention to reported instances of unsafe practices and hazardous situations on vessels in their zone.

---

5. Remedies for Hazardous Situations

a. General practices. All exposed dangerous areas and installations must be properly protected with covers, guards, or rails.

(1) Regulations also specify the height and number of courses of rails on passenger and crew decks.

(2) There should be two avenues of escape from every area within a vessel where passengers or crew may be quartered, or where anyone may normally be employed (see 46 CFR 32.01-1, 72.10, 92.10, and 190.10). While it is not always possible to provide such exits from cargo holds, the means of escape provided from these should be adequate and easily accessible.

b. Refrigerants. All refrigerants must be recognized as potentially dangerous substances and treated accordingly.

(1) The dangers involved in the use and transportation of dry ice and carbon dioxide as refrigerants are often overlooked. The dangers of dry ice were published, but only after a series of deaths of stevedores and crewmembers related to circumstances where dry ice was used as a refrigerant.

(2) Container cargo may be refrigerated by introduction of liquid nitrogen into the container, where it evaporates and thus chills the contents. Unless sufficient time elapses for complete evaporation before the container is loaded aboard ship, there is a risk of spillage of the liquid nitrogen. Since the temperature of liquid nitrogen (-320°F) cannot be withstood by ordinary ship steel, spillage can result in

fractures. Carbon dioxide and nitrogen can be asphyxiating when concentrated in tanks or holds.

c. Boiler torch pots. Pots should be secured in a vertical position, not at an angle. Low flash point liquids should never be used in torch pots, and fireroom personnel should be instructed in the dangers of any highly combustible liquid having a flash point lower than that of commercial kerosene, which is used for moistening the torch.

d. Gratings. Some machinery spaces lack gratings over the top of the main condensers to provide safe platforms for oiling the intermediate pressure links, adjusting the cutoffs, and accessing the indicator cocks. A grating with handrails over the main condenser is required to ensure the safety of engineroom personnel during the performance of their duties; its requirement comes within the intent of 46 CFR 32.01-15 and 58.01-20. (For more information, see MSM Volume II, Material Inspection, COMDTINST M16000.7A (series), Chapter A5.)

e. Fuel oil in bilges. At annual inspections, the inspector must examine the bilges and tank tops beneath the boilers and in any compartment in which oil burning equipment or fuel tanks are installed, to ensure that there are no accumulations of fuel oil that constitute a fire hazard.

f. Sparks and stack fires. Sparks or stack fires can result from the heating of soot and carbon deposits in preheaters, economizers and uptakes in boilers, and in exhaust manifolds and mufflers in diesels.

(1) A stack fire is particularly hazardous because it can develop undetected and then materialize many hours after the machinery plant is secured, when fresh air reaches the hot carbon deposits. Some vessels have had stack fires long after the crew has departed at a shipyard or layup pier.

(2) As a precaution against stack fires or sparking, it is necessary to keep all uptakes and mufflers clean. This is best accomplished by efficient combustion and plant operation and attention to periodic maintenance and cleaning. Inspectors require the opening of adequate access plates to inspect thoroughly those areas where carbon may accumulate.

---

6. Preventing Boiler Gas Explosions (Flarebacks)

Flareback in the furnace of a watertube boiler may be caused by the ignition of gases accumulating from vaporized oil that entered the furnace improperly, or ignition of vapors that have not been purged from the furnace before the lighting off.

The following procedures must be brought to the attention of all engineering personnel, to reduce the hazards of flarebacks:

a. Before attempting to light off the first or additional burners, ensure that properly heated oil is available at the burner to be lighted. The recirculation line is provided for this purpose.

b. Before installing an atomizer, ensure that it is fitted with a sprayer plate, and that the burner tip is tightly made up.

c. Before lighting the first burner or lighting off a burner again after all have been extinguished, the forced draft fan should be run long enough, with double front damper and burner registers wide open, to ensure that the furnace is properly purged.

d. When lighting off the first burner or additional burner, always use a torch. Never attempt to light a burner from an adjacent burner or from hot furnace brickwork.

e. With the torch lit and in proper position, the last valve in the branch connection leading from the fuel oil header supply line to the burner should be slightly opened. As soon as ignition occurs, this valve should be fully opened. If ignition does not immediately occur, the burner valve should be closed and the furnace thoroughly purged. This entire operation should be repeated until ignition occurs.

f. While a burner or burners are in service, the register door(s) should be wide open, and the oil temperature and pressure should be closely monitored. Cold oil or low oil pressure may cause the fires to die out; water in the oil may do the same. Should all burners be extinguished, the valves in the individual branch connections to the burners should be closed, the forced draft fan should be kept on, the double front damper and all burner register doors should be opened wide, and the furnace should be thoroughly purged before another attempt is made to light the burner.

---

7. Lighter-Aboard-Ship (LASH) Vessel Lighter Cranes

a. The extension of lighter guides aboard Lighter-Aboard Ship (LASH) barge-handling cranes may create significant personnel safety hazards. In separate incidents, despite various safety precautions, two mariners and three longshoremen were killed while lighters were being discharged. These people were caught by the hydraulically extended lighter guides of the LASH cranes and crushed against the barges.

(1) Operators of LASH vessels must take corrective action in accordance with 46 CFR 92.25-15.

(2) No specific method of personnel protection is required. However, such action must provide a degree of safety equivalent to that afforded by--

(a) A mechanism to provide a delay of at least 3 seconds' duration, from actuation of the lighter guide extension controller and initial movement of the guide arms; and

(b) A distinctive, continuously sounding alarm, to begin sounding at the delay period before guide extension. An alarm speaker must be located on each crane leg, in immediate proximity to the point(s) of danger.

b. The lighter crane on every LASH vessel must be examined at each inspection and reinspection for certification to ensure that the hazards described above have been corrected through the installation of guards, rails, and warning devices. Plans and specifications for such installations must be reviewed by the cognizant OCMI.

---

8. Explosions in Diesel-Fired Boilers

A number of explosions have occurred in auxiliary boilers that burn diesel oil. Many of these explosions have occurred on dual-fuel fired boilers upon switch over from diesel to heavy oil. These vessels had common fuel piping and heater systems. When the heavy oil and heater were switched in, a slug of diesel was also heated, which altered the fuel-air mixture. Common fuel piping is prohibited because of fuel and burner nozzle tip contamination problems. An explosion can occur when the fuel-air mixture in the furnace is not properly controlled. Even very small accumulations of fuel oil in the boiler can produce explosive mixtures. Automatic control systems for diesel oil should therefore be very reliable and properly designed, operated, and maintained. At each inspection of a vessel equipped with diesel-fired boilers, the inspector must ensure that the following procedures are followed:

a. Fuel oil shutoff valves are inspected or tested to ensure that there is no leakage.

b. Controls to shut down the boiler due to flame failure are tested to ensure safe boiler operation.

c. To prevent a vapor buildup from residual fuel in the furnace, no time should elapse between a furnace purge and a light off or ignition trial.

d. Dual fueled boilers that heat a heavier oil should be examined to ensure that the piping of the lighter oil does not go through the heater.

---

9. Galley and Laundry Room Exhaust Ducts

A number of shipboard fires have originated in the exhaust ducts of galley ranges, fryers, and laundry room ventilation systems. These fires have resulted in serious damage, injury, and loss of life aboard the vessels involved. Unmaintained exhaust duct work will become saturated with cooking grease and pose a fire hazard.

Such areas have sometimes been overlooked during vessel inspections. The following procedures must be followed during biennial and mid-period inspections of U.S. vessels and during SOLAS verification examinations of foreign vessels:

a. On all vessels--

(1) Remove the inspection plate from the galley exhaust duct;

(2) Disconnect the fusible link, if installed, and test the operation of the fire damper;

(3) Remove sufficient inspection plates to ensure that the duct work is clean and free of grease. Pay particular attention to long, horizontal duct runs;

(4) Examine all hood screens for cleanliness;

(5) If an extinguishing system is installed, ensure that it is in proper working condition; and

(6) Examine laundry room vents, ask if the company has a cleaning and maintenance program (check records – part of ISM/SMS responsibility).

b. On passenger vessels only, the inspector must also--

(1) Remove sufficient overhead panels to ensure that the galley exhaust duct is suitably insulated, in accordance with SOLAS standards and applicable U.S. regulations. Unless changes are made to the duct work, this part of the examination need be made only once; and

(2) Check all main and zone control valves of the sprinkler system to ensure that they are in the full open position.

10. Noise Factors in the Marine Environment

a. Personnel on virtually any type of vessel or unit may be exposed to damaging noise.

(1) Noise-induced hearing loss is a slow, progressive disorder that often goes unrecognized until it has become a pronounced handicap, generally in later years.

(2) Related problems, such as tinnitus (ringing in the ears) can be even worse. Excessive noise poses a potential threat to vessel safety by interfering with shipboard communications and the drowning out of signals and alarms.

b. Initial Coast Guard actions. Previously, the Coast Guard dealt with maritime noise problems generally through existing regulations on a case-by-case basis. For example, 46 CFR 72.20-5 and 92.20-5 require accommodations aboard vessels to be insulated from undue noise. Similarly, 46 CFR 32.40-15 requires tankships and manned tank barges to have crew's quarters suitable for the accommodation and protection of the crew. 46 CFR 58.10-15(e) and 33 CFR 150.509(c) specify noise protection for personnel on gas turbine-propelled vessels and deepwater port facilities, respectively.

c. Establishment of standards. In November 1981, the International Maritime Organization (IMO) published a Code on Noise Levels On Board Ships, Resolution A.468(XII). The Code applies to all vessels over 1,600 GT built after publication of the Code.

(1) In June 1982, the Coast Guard published NVIC 12-82, Recommendations on Control of Excessive Noise. This NVIC was developed in light of the IMO Code and is considered satisfactory implementation of the Code's standards. Therefore, vessels and units meeting the NVIC’s standards are considered to meet those of the IMO Code as well.

(2) NVIC 12-82 deals with the entire spectrum of maritime noise and recommends a broad-based program of noise control and hearing conservation. Its two major recommendations are a 24-hour noise exposure limit of 82 dB(A) for all personnel and periodic audiometric examination of all personnel exposed to noise levels above a certain low exposure level of 77 dB(A). The only limits on noise levels (as opposed to exposure levels) apply to berthing spaces, and messing spaces on vessels over 1600 GT. These limits are 75 dB(A) for existing vessels and units, and 70 dB(A) on vessels and units constructed after December 31, 1985.

d. Inspection procedures. NVIC 12-82 is based on the expectation that the maritime industry will voluntarily implement and maintain an effective noise control program without direct Coast Guard involvement. This policy was developed with the assistance of industry and the Commandant anticipates its wide implementation.

(1) The role of inspection personnel is primarily to promote NVIC 12-82 and to note its effects. Therefore, there should be minimal Coast Guard enforcement concerning noise control. Inspectors should be alert to excessive noise levels during inspections, and require noise measurements to be taken to quantify levels of exposure.

(2) If excessive noise levels are verified, inspectors should require correction of deteriorated systems that permit production of unwarranted noise or the unnecessary transmission of noise to adjacent spaces.

(3) Inspectors should also examine the condition of hearing protection devices and the posting of warning signs, and verify that the vessel or unit's hearing conservation program is being followed.

NOTE: Complaints alleging that crewmembers have suffered hearing loss from long-term exposure to excessive noise must not be considered as reportable marine casualties involving personal injury.

e. Handling complaints. If a crewmember files a written complaint requesting the elimination of a specific noise hazard, the situation should be evaluated and all discrepancies corrected.

(1) The vessel owner is responsible for taking these measures, upon the request of the OCMI. Only when the OCMI has reason to question the owner's evaluations should inspection personnel become involved in noise measurement.

(2) Criteria for determining whether noise levels or exposure periods are excessive should normally be those stated in NVIC 12-82, namely, the noise limits for berthing and messing spaces and the 24-hour noise exposure limit. If there is objection to the application of these criteria, the owner may suggest another recognized standard that meets or exceeds the standards of NVIC 12-82. Noise control is a complex science, requiring professional expertise to evaluate problems and develop effective remedies.

f. Program review. NVIC 12-82 was issued to promote an industry standard, and to provide a methodology to evaluate noise in the marine environment. Over the next several years, the effectiveness and content of this policy will be reviewed. Effective program review can be obtained only through feedback from field units relating noteworthy experiences and observations of noise conditions and actions. Such reports and questions concerning NVIC 12-82 should be directed to Commandant (CG-CVC).

O. INSPECTION OF PRESSURE VESSELS (P/VS)

1. Test and Examination Intervals

Periodic inspections of unfired pressure vessels (P/Vs) are required by 46 CFR 61.10. These regulations require P/V testing and examination to be conducted twice in 5 years. The testing and examination interval for bulk storage tanks containing refrigerated, liquefied CO^2 gas for use on board vessels as a firefighting agent should not extend beyond 10 years (120 months) from the last such test/exam. The aforestated authorization must be exercised primarily to permit the test and examination interval to coincide with the vessel's drydocking or similar out of service availability period.

2. Purpose

Periodic examinations of P/Vs are intended to assess a P/V's condition to determine that the vessel is satisfactory to continue in service at the pressure and environment of the system for which it is being used.

3. Factors Affecting P/Vs in Service

a. Internal. P/Vs are subject to different factors that can affect their physical conditions. Water vapor, other gases, and particulate matter can cause corrosion in P/Vs. Interior coatings can affect the thoroughness of an internal examination if they mask the condition of the covered surface. Conversely, they can give an indication of trouble if deterioration of the metal results in a change to the appearance of the coating.

b. External. Depending on where and how the P/V is mounted, cyclic loading can be transmitted to the P/V through its saddles/support framework if the foundation is subject to movement. Vibration loads are commonly transmitted to a P/V through attached piping and rotating machinery. The motion of other machinery located in adjacent areas can transmit loads through the deck and bulkheads to a P/V. Mechanical damage can occur if heavy objects contact the P/V or any of its attached piping.

---

4. Inspection Descriptions

a. Visual examinations. Accessibility to the internal surfaces is the primary consideration when conducting visual examinations. Each P/V in a system regulated under 46 CFR 58.60 that is fitted with a manhole or other inspection opening so it can be satisfactorily examined internally must be opened twice within any 5-year period, with no more than 3 years elapsing between examinations. The same applies to P/Vs stamped with the Coast Guard symbol. Each P/V must be thoroughly examined internally and externally.

(1) No P/V need be hydrostatically tested except when a defect is found that the marine inspector believes may affect the safety of the P/V.

(2) If a hydrostatic test is warranted, the P/V must be tested at a pressure of 1 ½ times the maximum allowable working pressure.

(3) Section VIII, Part UG-46 of the ASME Code has standards for openings in P/Vs. An elliptical manhole must not be less than 11" X 15" or 10" X 16"; a round manhole must not be less than 15" in diameter. Smaller openings may be acceptable if the inspector can satisfactorily examine the internal surfaces.

(4) The presence of a backing strip eliminates the possibility of a visual examination of the weld and may contribute to internal corrosion as a moisture trap. The presence of a backing strip does not, however, prevent the acceptance of an otherwise satisfactory visual examination. The inspector should consider other factors, such as the P/V's service, condition, other signs of internal corrosion, age, and date of last hydrostatic test, when determining whether additional testing is warranted.

b. What to look for. All internal surfaces should be carefully examined for evidence of fractures or indications of deterioration.

(1) The inspector should pay special attention to the heat affected zone adjacent to all welds. All welded joints, as well as all nozzle connections and similar openings,

should be thoroughly examined. Problem areas of the internal surfaces include low spots where water and grit accumulate, areas adjacent to openings (particularly the drain), welds, and their heat affected zones.

(2) Problem areas associated with the external surfaces include welded attachments, such as support webs, and areas around openings, particularly if the P/V is insulated. The external appearance of insulating materials should not be accepted as indicative of the condition of the welds or the shell and head material. If the insulation materials separate from the P/V, condensate can be trapped beneath the insulation and cause metal deterioration. The insulation should be carefully examined visually and any suspect areas should be sounded to determine the extent of separation from the P/V. These areas should have their insulation excavated back to a zone of good adhesion, the metal examined, and the insulation then repaired in accordance with the manufacturer's recommended procedures.

(3) There are presently no regulatory or industry requirements for insulation to be periodically removed to allow visual examination of the P/V. Areas that often suffer separation are those surrounding view ports, areas surrounding pipe connections that transmit vibration to the P/V, and any projection in the upper portion of the P/V where rain or condensation normally contact the P/V.

c. How to look. Two critical factors of an inspection are illumination and accessibility. There must be sufficient light to allow a thorough examination of all welds and plate surfaces. Bright illumination is necessary for all visual examinations.

(1) If access to the internal areas is limited to small "inspection openings," a flashlight beam directed through such openings may not provide sufficient illumination for examination. When this occurs, other types of lighting can be used, e.g., flexible lights, borescopes, etc. If the P/V is equipped with a manhole the inspector should be able to get inside, close enough to scrutinize all internal areas.

(2) The P/V must be clean enough to allow a thorough examination of all surfaces; the presence of water, grit, or other matter inhibits examination.

(3) If the inspector cannot satisfactorily see the area of concern with a bright light directed at the area being examined, a satisfactory internal examination cannot be conducted. In this case, the vessel should be tested by means acceptable to the OCMI to satisfy the periodic inspection requirement.

NOTE: A marine inspector must complete a satisfactory internal examination of a P/V before that inspector is authorized to exempt the vessel P/V from hydrostatic testing in accordance with 46 CFR 61.10-5(b).

For any vessel P/V which is constructed in such a way so as to restrict or limit visual accessibility to internal areas of interest to an inspector, in lieu of an internal exam, or when deemed necessary by the attending inspector, a hydrostatic testing or a suitable alternative acceptable to the OCMI mandated by regulation and prudent from an operational standpoint.

NOTE: Certain precautions are necessary when an inspector is going to enter a P/V. If the P/V has suffered heavy rusting there may be dangerously low levels of oxygen inside. Similarly, if the P/V has carried a hazardous substance or has been cleaned with a product that can affect a person's health, the P/V should be cleaned, vented, and certified safe for entry prior to doing an internal inspection.

d. Alternatives. No P/V must be hydrostatically tested except when a defect is found that the marine inspector's believes may affect the safety of the P/V. In this case, the P/V should be hydrostatically tested at a pressure of 1 1/4 times the maximum working pressure (see 46 CFR 61.10-5 for specific guidance).

(1) Nondestructive Testing (NDT) methods can be authorized as a substitute for the required hydrostatic test. A plan to employ NDT should be discussed with the cognizant OCMI.

(2) The methods used must provide examinations of all welds and high stress areas as well as thickness gauging of the lower portion of the P/V. Usually this will include shear wave ultrasonic procedures for crack detection in welds or the shell (high stress areas adjacent to the heads), and standard compression wave procedures for thickness gauging.

(3) The amount and type(s) of NDT used must satisfy the OCMI, the test action(s) should be witnessed by a Coast Guard inspector, and the details of the test should be appropriately noted in the inspection record. Items to be considered when evaluating the plan include the P/Vs age, service, conditions of operation, and examination history, especially the methods used and results of past inspections.

(4) The use of NDT in lieu of hydrostatic testing may be appropriate when there is a question of compatibility between the water and the working fluid or interior coatings. Additionally, the OCMI may accept NDT in lieu of hydrostatic testing when the working fluid cannot be used for the test because of personnel hazards or flammability (see 46 CFR 61.10-5(f) and (h)) and when the weight of the water used during the test cannot be safely supported by the P/Vs substructure.

NOTE: Backing strips (rings) and butt welded joints with one plate edge offset (see UW 13.1(k) of the ASME Code) may prevent adequate interpretation of NDT.

e. Problems found during visual exams. If deterioration affecting the strength of the heads, shell, or welds, or evidence of a fracture is found, the extent of the problem should be determined by NDT so that repairs can be made, if possible.

(1) If there is doubt about a condition, NDT should be used to confirm that a problem exists. Whenever possible, a 125 percent MAWP hydrostatic test should be conducted to determine the suitability of a P/V for continued service.

(2) If a condition requires repair, it may be necessary to remove the P/V from service until the problem has been corrected. Repairs of P/Vs should be made only as allowed by 46 CFR Part 59 and the ASME Code. Weld procedure information and similar guidance for repairs are available through Commandant (G-MOC) and the MSC.

(3) Additional NDT and a hydrostatic test should be required for any P/V after repairs have been completed. The test pressure should be the same as that required by the Code at original construction: 150 percent MAWP for Section VIII, Division 1 or 125 percent MAWP for Division 2. Foreign-built P/Vs that have been accepted with design safety factors less than 4:1 should have a test pressure specified by the Coast Guard as noted above.

f. Hydrostatic test. A hydrostatic test at a pressure equal to 125 percent of the MAWP subjects the P/V to a greater load than it will be exposed to in normal operation, but that it is reasonable to assume the P/V can withstand under ordinary conditions.

(1) The test pressure should be applied for a sufficient period of time to allow the load to act on any defect. For air receivers, a period of 5 to 10 minutes is normally adequate. If the P/V has developed a crack or has suffered deterioration, the hydrostatic test will be proof of its present condition. Simply stated, if the P/V under test pressure does not rupture, then it can be assumed that it is acceptable for continued service. If the P/V fails while under hydrostatic pressure, the load will be quickly relieved as the water vents through any resulting fracture.

(2) In some special circumstances, the appropriate test pressure to satisfy the periodic testing requirements is less than 125 percent of the P/V's MAWP. Many foreign-built P/Vs and some domestically-built P/Vs, such as those built to ASME Section VIII, Division 2 specifications, do not meet the allowable stress criteria of ASME Section VIII, Division 1. Instead, they are designed for higher allowable stresses and for this reason are allowed to be tested at a pressure designated by the Coast Guard during the plan review process. This fact may not always be obvious and marine inspectors should carefully review the P/V's data plate to determine the appropriate test pressure.

(3) Hydrostatic leak tests for P/Vs used for the storage of air or similar compressible gases require the P/V to be depressurized and then filled with water.

(a) In order to properly fill the P/V with water, it must be vented at its highest point. The relief valve must be removed and its opening plugged tightly. All other connections to the P/V must be closed tight or removed and plugged. The inspector should trace the water source upstream from the P/V to verify supply, and should also verify water pressure in the P/V. This is normally accomplished with a pressure gauge installed on the P/V.

(b) A word of caution is offered against the use of very cold water as the test fluid. In rare instances, with water at temperatures near freezing, embrittlement can result and cause failure of welds during a test. The test fluid should be no less than 60°F, if possible.

(c) After the pressure has been increased to 125 percent MAWP, the supply should be secured and the pressure held for a period of time sufficient to determine that there are no leaks. During this time the inspector should examine all the exterior surfaces of the P/V, with special attention given to the welds and their heat affected zones of all nozzles, manways, and similar openings.

g. Other test considerations. The regulations in 46 CFR 197.462(b) and (d) require periodic pneumatic and hydrostatic tests of pressure vessels for human occupancy (PVHOs) and contain guidelines for these tests. Whenever a compressed gas leak test or pneumatic overpressure test is performed, certain additional safeguards should be employed. The regulations include a general requirement for suitable precautions for these tests, such as ensuring that the P/V is substantially bolted down to a firm foundation; conducting the test in a remote location (or, requiring all persons not involved with the test to leave the area until the test has been completed); and conducting the test with the P/V behind some form of a barrier or substantial structure, if possible. If the P/V is a multi-lock chamber, each lock should be pressurized separately.

h. Intervals for testing. Each tank must be subjected to the tests and inspections described in 46 CFR 38.25. Intervals for internal examinations and hydrostatic tests for Pressure Vessel Type Cargo Tanks (PVCTs) are to be computed from the date of the last credit internal examination or hydrostatic test. It is not intended that extensions for testing intervals be granted except in the most unusual circumstances. All requests by industry for extensions of internal examination or hydrostatic test intervals of PVCTs should be forwarded to Commandant (CG-CVC) with an endorsement by the OCMI.

P. INSPECTION OF LIFESAVING SYSTEMS

1. Introduction

Each Title 46 CFR subchapter on inspected vessels requires that inspections for certification include tests and inspections of the lifesaving equipment. The inspections and tests in this section are designed to verify that the equipment, as installed on the vessel, complies with regulations in 46 CFR Chapter I and, where applicable, the International Convention for the Safety of Life at Sea (SOLAS).

a. Conditions of approval. The installation of each lifeboat, rescue boat, liferaft, and their respective launching appliance must meet any special conditions of its approval. Any such conditions are identified on the equipment's Certificate of Approval. Check approval records in MISLE. The contents of the approval certificate and its status (approved, expired, former may use, or former may not use) may also be found at http://cgmix.uscg.mil

b. Excess lifesaving equipment. Excess lifesaving equipment carried aboard inspected vessels must be of approved types and kept in good operating condition.

c. Repair, modification, and special inspection procedures. See MSM Volume II, Material Inspection, COMDTINST M16000.7A (series), Chapter C2 and various NVICs for more detailed information on repairs, modifications, and special inspections of lifesaving equipment. Under current SOLAS requirements (Regulations III/20 and III/36), maintenance instructions for all lifesaving equipment are required on board and equipment must be maintained according to the instructions.

(1) Some instructions may state or imply that certain inspections and repairs must be performed by a manufacturer's representative. This is enforceable when it comes to the servicing of inflatable liferafts, servicing of non-disposable hydrostatic release units, and permanent repairs to inflated rescue boat components, all of which must be done by a Coast Guard-approved facility.

(2) The inspector should be satisfied that other inspections and repairs are carried out by competent persons. In some cases, a manufacturer's representative may be the only available choice.

d. Loading procedures. Many of the tests in this section for launching appliances require the boat to be loaded or overloaded with deadweight. Adequate safety precautions should be taken during loading of the boat. Personnel should not be permitted to be used in the tests that load the boat to or beyond rated capacity, except as is absolutely necessary to load or unload the boat, or perform some part of the test once the boat has reached the water.

(1) Open lifeboats are required to have engine boxes that are watertight up to the level of the cover. Although not recommended, the owner or shipyard may elect to load an open boat by filling it with water. (See NVIC 6-81 for details on using water for this purpose and use of a test waterline.)

(2) Enclosed and partially enclosed boats do not normally have watertight engine boxes and cannot be flooded. Any weights that can be properly distributed can be used.

(3) Experience has shown that bags of sand or other fine material inevitably leak and create a cleanup problem. Bags of lead shot with carrying handles are more efficient and less likely to be a problem.

(4) Large water containers can be used. Large capacity water bags may be difficult to use successfully. These bags, without baffles or compartments, allow a free surface effect that can destabilize the lifeboat, especially if the bags are at or above seating level, raising the center of gravity. This method may also not provide for a thorough distribution of weight. Smaller bags or buckets of a capacity easily handled should be used and distributed uniformly, including the area in way of the keel.

e. Weight conditions "A" and "B." Lifeboats have two weights stamped on their approval plates.

(1) The condition "A" weight is the empty boat without equipment and fuel.

(2) The condition "B" weight is condition "A" plus the weight of all equipment, fuel and the number of persons for which the boat is approved. The current standard weight used to compute the "B" weight is 181.5 lbs (82.5 kg) per occupant for lifeboats on cargo ships and 165 lb (75 kg) per occupant on passenger ships. For lifeboats installed before July 1, 2010, use the weights marked A and B on the lifeboat’s permanent placard, which would be based on 165 lbs per occupant for all lifeboats.

f. Definitions:

(1) Auxiliary launching systems consisting of a winch and davit arrangement are provided for free-fall lifeboats for use in those cases where it may be unsafe to launch the boat in free-fall. These systems must meet many of the same requirements as a conventional davit and winch.

(2) Fleet angle, referring to a wire rope leading to a winch drum, means the angle included between an imaginary line from the lead sheave perpendicular to the axis of the drum, and the line formed by the wire rope when led from the lead sheave to either extremity of the drum. See figure P-1 below.

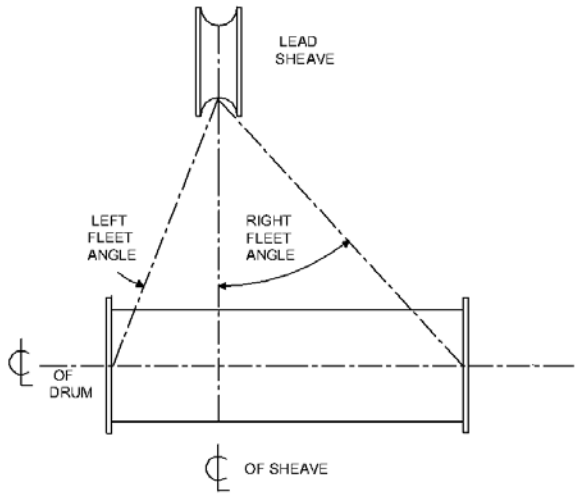

Figure P-1: Fleet angle

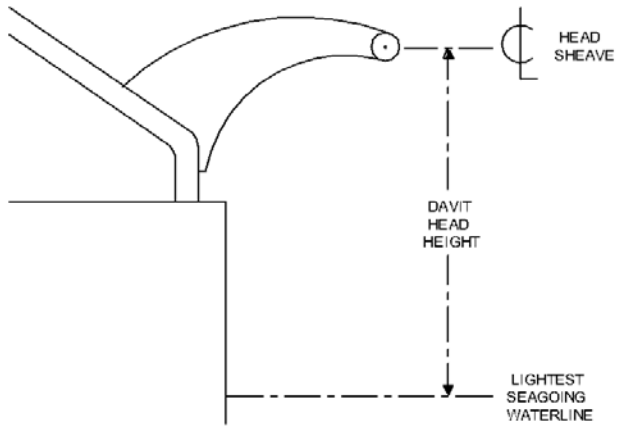

Figure P-2: Representation of davit head height for calculating lowering speed

(3) Free-fall launching systems launch a survival craft by allowing it to fall from its stowage position into the sea, with persons on board. Most free-fall systems include a ramp that the survival craft slides down before it begins its free-fall. Special seating, hull design, and fall trajectory provide for the safety of those on board, and also ensure that the craft moves away from the vessel when it enters the water, whether or not the engine has been started.

(4) Inflatable Buoyant Apparatus (IBAs) are similar to inflatable liferafts, except they do not have canopies. Larger IBAs can be used either side up. IBAs must be serviced in the same way as inflatable liferafts. On vessels, IBAs can be substituted for conventional life floats and buoyant apparatus. With the approval of the Commandant (CG-CVC), IBAs may be allowed to be substituted for inflatable liferafts on inshore waters.

(5) Marine evacuation systems consist of a slide or chute, an inflatable platform, and associated survival craft, designed to rapidly transfer large numbers of persons from an embarkation station directly to the survival craft or to the platform for subsequent embarkation into the survival craft.

2. Initial Inspections

The following inspections are intended for a vessel undergoing its initial inspection for certification. The applicable tests should also be conducted whenever new lifesaving equipment is installed on any vessel, or whenever any item of lifesaving equipment is structurally repaired, altered, or undergoes any other major repair which could affect its performance. This subpart is written on the assumption that equipment on a vessel undergoing its initial inspection is new.

a. Davit and winch launching systems for lifeboats, including auxiliary launching systems for free-fall lifeboats. (See MSM Volume II, Material Inspection, COMDTINST M16000.7A (series), Chapter C2 for detailed information on certain situations concerning boat handling equipment.)

(1) Preparation for launching.

(a) Procedure. The inspector must determine the time required for two crew members to prepare the boat for launching. Time starts with the two crew members at the boat launching station, and the boat stowed as it normally would be when the vessel is at sea. Preparation is complete once a launching crew (at least three persons) is on board and ready for launch.

(b) Acceptance criteria. The time to prepare the boat for launching must be 5 minutes or less.

(2) Light load. Operating the launching system at light load demonstrates that the mass of the boat is sufficient to overcome the frictional resistance of the winch, falls, sheaves, blocks, and associated gear. It verifies that the minimum lowering speed can be achieved in this condition. For boats with a hydrostatic lock on the release mechanism, it verifies that the lock operates at the lowest operational hydrostatic pressure. This test can generally be completed quickly, since no special loading is required for a fully equipped boat.

(a) Procedure.

[1] The boat should approximate its condition "A" weight for this test, with added weight of equipment and fuel on board. Precise loading and load measurement is not necessary, however. In addition, one person may be on board to operate an onboard winch brake control or the release mechanism. If additional personnel are needed to complete the test and to recover the boat, they may board when the boat reaches the water.

[2] Release the gripes, if necessary. Tricing, frapping, and/or bowsing gear do not need to be used for this test if they are not needed.

[3] Lower the boat by releasing the winch brake. If the winch brake is arranged for control from within the boat, a person on board the boat should operate the winch brake control.

[4] Determine lowering speed by timing the boat as it drops through a measured distance marked on the side of the vessel or on the falls, or by any other reliable means. The speed measurement should be taken only after the winch has accelerated to full-governed speed.

[5] Launch the boat into the water using the normal launching procedure as specified in the ship's training manual and the equipment markings.

[6] Recover the boat with the winch. Anyone on board the boat should disembark when it reaches deck level. No one should be on board the boat when the weight of the davit is taken up by the winch, and the davit moves into its stowage position. This is when most fall and fall attachment failures occur.

NOTE:

Release mechanisms approved under approval series 160.133 and installed prior to January 1, 2013 will typically have a hydrostatic lock that allows the hooks to be released only once the boat is in the water. However, all lifeboats approved under approval series 160.135 after January 1, 2013 will have a hydrostatic interlock or some other means to ensure the lifeboat is waterborne before the release mechanism can be activated. With the keel of the boat at or just in the water and tension on the falls, it should be verified that the hydrostatic lock prevents operation of the release mechanism. Then with the boat lowered into the water, the hydrostatic lock should open and permit operation of the release mechanism.

An automatic release mechanism (approval series 160.170) is sometimes used on a boat or survival capsule with a single fall launching system. Once set or cocked, these devices release as soon as tension is off the fall. Set these devices for automatic operation for this test. If a person will be on board the boat as it is lowered, that person should set the release mechanism for automatic operation just before the boat reaches the water.

Some older style release mechanisms such as “Rottmer” gear, typically still found in open lifeboats, will release the boat from the falls whenever the release handle is moved, whether the boat is in the water or not. Persons in command of the boat and operating these mechanisms must fully understand the danger of serious injury or death resulting from premature operation.

Release the boat from the falls using the on-load release mechanism control as the boat reaches the water. The keel of the boat should be at or in the water, but there should still be tension on the falls when the release mechanism is operated. A release handle safety pin, if fitted, should not be removed until the boat is in position for release.

(b) Acceptance criteria.

[1] There must be no deformation of or damage to the launching appliance or its connections to the vessel.

[2] Except for free-fall lifeboat auxiliary launching systems, the lowering speed for systems with winches (160.115 approval series) must be at least

$$S = 0.7*(0.4 + (0.02\ H))$$

where S is the speed of lowering in m/s, and H is the height in meters from davit head to the waterline at the lightest seagoing condition. For the purposes of this calculation, H must not be greater than 30, regardless of the actual height of the davit head.

In English units, the formula is

$$S = 0.7*(79 + (1.2\ H))$$

where S is in ft/min and H is in ft, with H not greater than 99.

[3] Auxiliary launching systems for free-fall lifeboats must safely and successfully lower the lifeboat. No minimum speed applies.

[4] The lowering speed for systems with winches approved only under the 160.015 approval series must be at least 40 ft/min (0.2 m/s), except that in the case of winches designed for passenger vessel “emergency lifeboats”, the speed must be at least 60 ft/min (0.3 m/s). The carriage requirements for two lifeboats “for use in an emergency” apply to SOLAS passenger vessels built prior to July 1, 1986, pre-dating the carriage requirements of SOLAS rescue boats incorporated in the 1983 SOLAS. See SOLAS ’74 unamended, Chapter III, Part B, Regulation 27.

NOTE: A winch in the 160.115 approval series may be used to replace a winch in an older davit installation where the higher speed requirements do not apply. In this case, the winch may be set up to meet the speed requirement in this paragraph.

[5] The brake must be a deadman type, always applied unless the operator holds the control handle or mechanism in the position to lower the boat. If the operator releases the brake handle/mechanism, the handle/mechanism returns to the stop position, thus applying the brake and stopping the boat. No additional force is permitted.

[6] Each winch drum must be arranged so the fall wire winds onto the drum in a level wrap. There must be no more than one layer of wire on the drum when the davit is in stowed position, except that if the maximum fleet angle is not more than 4°, two layers of wire are acceptable on a grooved drum. Winches must be demonstrated to wind the falls evenly on and off the drum, regardless of whether the drum is grooved or smooth. The fleet angle must not exceed 8° in any winch installation.

[7] For a multiple fall system, the falls must wind off the drums at the same rate when lowering. The falls must wind onto the drums evenly and at the same rate when hoisting.

[8] For launching appliances arranged for control from within the boat, there are two basic types of control.

aa. One of these types uses a control wire that pays out as the boat lowers. The control wire must properly operate the winch brake throughout the launching sequence. There must be sufficient length of control wire available inside the boat to operate the winch brake until the boat is released from the falls.

bb. The other type is a pull-and-go system. An operator in the boat pulls a control lever or handle on the launching appliance that is accessible from a position on board the boat. Once the control is activated, it holds the brake control in the lower position, until a crew member on deck returns it to stop.

[9] The release mechanism must open all hooks simultaneously and release the boat into the water in the intended manner.

[10] Except for free-fall lifeboat auxiliary launching systems, survival craft installations approved under approval series 160.115 and 160.132 must be capable of launching the survival craft under unfavorable conditions of trim of up to 10° and with the vessel listed up to 20° either way. For other installations, the trim requirement is 10°, but the list requirement is 15°. Prototype launching systems are tested at these extremes prior to approval. It will not normally be possible to test launching systems installed on a vessel at these extremes, but the inspector

should verify that nothing about the installation would appear to impede launching under these conditions.

(3) 10 percent overload. The 10 percent overload test demonstrates that the launching system can safely launch a fully loaded boat with a 10 percent margin for overloading.

(a) Procedure.

[1] The boat must be in its embarkation position. Tricing pendants, if any, must be disconnected. The boat should be held alongside the ship during loading by means of the installed frapping, and/or bowsing gear.

[2] Load the boat so that its total weight is 110 percent of the condition "B" weight shown on its data plate. Hold the boat in position for at least 10 minutes and check for deformation, especially at davit and winch foundations and other load-bearing members.

[3] Lower the boat using the normal lowering procedure, using the on-deck winch control position.

[4] Determine lowering speed by timing the boat as it drops through a measured distance marked on the side of the vessel or on the falls, or by any other reliable means. The speed measurement should be taken only after the winch has accelerated to full governed speed.

[5] After the boat passes through the measured distance, stop lowering by releasing the winch brake control. Then alternately release and apply the brake so the boat stops at approximately 2 m (6 ft) intervals. Complete at least three start-stop cycles. The lowering operation should be carefully planned, so that the boat will not have to be raised to complete the start-stop cycles. Most winches will not be capable of raising the loaded boat.

[6] Stop lowering just as the boat reaches the water. The keel of the boat should be at or in the water, but there should still be tension on the falls. Release the boat from the falls using the on-load release mechanism control. Release mechanisms with a hydrostatic interlock will require use of the emergency override device to permit on-load release. For lifeboats installed after January 1, 2013, the interlock override will include special mechanical protection that must be deliberately destroyed, e.g. by breaking a protective glass or translucent cover. The restoration of the release mechanism in these cases should be planned for, and may require a service technician.

[7] Unload the boat, recover it with the winch, and return it to its stowed position. Observe operation of the limit switches as the davit approaches the stowed position. Anyone on board the boat should disembark when the boat reaches deck level. No one should be on board the boat when the weight of the davit is taken up by the winch, and the davit moves into its stowage position. This is when most fall and fall attachment failures occur.

(b) Acceptance criteria.

[1] There must be no deformation of or damage to the launching appliance or its connections to the vessel.

[2] Except for free-fall lifeboat auxiliary launching systems, the lowering speed for systems with winches (160.115 approval series) must be at least:

$$S = 0.4 + (0.02\ H)$$

where S is the speed of lowering in m/s, and H is the height in meters from davit head to the waterline at the lightest seagoing condition. For the purposes of this calculation, H must not be greater than 30, regardless of the actual height of the davit head.

In English units, the formula is

$$S = 79 + (1.2\ H)$$

where S is in ft/min and H is in ft, with H not greater than 99.

[3] Auxiliary launching systems for free-fall lifeboats must safely and successfully lower the lifeboat, but no minimum speed applies.

[4] The lowering speed for systems with winches (160.115 approval series), including auxiliary systems for free-fall lifeboats, must not exceed 1.3 m/s (256 ft/min).

[5] The lowering speed for systems with winches approved only under the 160.015 approval series must not normally exceed 120 ft/min (0.6 m/s). The lowering speed for winches designed for passenger vessel emergency lifeboats must not normally exceed 160 ft/min (0.8 m/s). Check certificates of approval, or approval records in MISLE or CGMIX for approved deviations from these requirements.

NOTE: A winch in the 160.115 approval series may be used to replace a winch in an older davit installation where the higher speed requirements do not apply. In this case, the winch may be set up to meet the speed requirement in this paragraph.

[6] The brake must be a deadman type, always applied unless the operator holds the control handle or mechanism in the position to lower the boat. If the operator releases the brake handle/mechanism, the handle/mechanism returns to the stop position, thus applying the brake and stopping the boat. No additional force is permitted.

[7] The action of releasing the winch brake control must bring the boat to a stop within 1 m (39 in). No additional force on the winch brake control is permitted. The brake action must be smooth and positive.

[8] Each winch drum must be arranged so the fall wire winds onto the drum in a level wrap.

[9] For a multiple fall system, the falls must wind off the drums at the same rate when lowering. The falls must wind onto the drums evenly and at the same rate when hoisting.

[10] For launching appliances arranged for control from within the boat, the untended control wire must feed out properly with the boat. The winch brake operation must not be affected by the mass of the fully extended control wire.

[11] The release mechanism must open all hooks simultaneously and release the boat into the water.

[12] The limit switches must disconnect the winch power source 0.3 m (12 in) or more before the davit reaches its fully stowed position.

(4) Exposed wet brake. Conduct this test if any winch brake surface is exposed to the weather.

(a) Procedure. Thoroughly wash down the exposed brake surfaces with water. Repeat the 10 percent overload test described in P.2.a.(3) above while the brake surfaces are still wet.

(b) Acceptance criteria. The brake must stop the winch when the brake surface is wet, but the 1 m stopping distance requirement does not apply.

(5) Launching underway. This test is intended to demonstrate that the boat can be launched satisfactorily when the vessel is underway at 5 knots, and also that the boat

can be launched satisfactorily when the vessel is moored in a current. This test should normally be completed during the trial trip. The test may be waived if the builder, owner, or equipment manufacturer can provide evidence that such a test has been successfully completed for the boat/davit/winch combination on a sister vessel. For the purposes of this test, a sister vessel is one which is generally of the same size and hull form, and where the launching position, including height above the water line, is the same.

(a) Procedure. Launch one boat of each type on board with only the required operating crew on board and the vessel proceeding at a speed of approximately 5 knots. No special loading of the boat is required. Use the manufacturer's recommended launching procedure.

(b) Acceptance criteria. The boat must not give any indication that it is unstable or out of control during the launching procedure. The boat's painter release device must operate as intended.

b. Free-fall lifeboat launching systems. Free-fall lifeboat and launching system installation tests are conducted with the vessel on an even keel at its lightest seagoing draft. The tests described in this section may be conducted in any order appropriate to facilitate test loading.

(1) Light load.

(a) Procedure.

[1] The boat should be arranged for launching by a launching crew on board the boat. Although not required, trial launchings would normally be carried out by the manufacturer's representative before the inspection for certification begins.

[2] The boat should approximate its condition "A" weight for this test, with added weight of equipment and fuel on board. Precise loading and load measurement is not necessary. In addition, the minimum launching crew should be on board to operate the on-board launching control.

[3] The launching crew should launch the boat in free-fall by one of the two independent activation systems for the release mechanism which must be operated from inside the lifeboat. The boat should then be retrieved and examined with respect to the acceptance criteria below.

(b) Acceptance criteria.

[1] There must be no deformation of or damage to the launching appliance or its connections to the vessel.

[2] There must be no deformation of or damage to any seat or seat mounting in the lifeboat.

[3] There must be no cracks or other structural damage to the hull of the lifeboat or any other structurally important part of lifeboat. Cracks in structural members of a free-fall lifeboat indicate that the structure must be replaced.

[4] There must be no cracks in non-structural members that could break loose during a free-fall launching.

[5] The free-fall release mechanism must operate properly and release the boat from the launching appliance.

[6] The launching system must operate smoothly, must launch the boat into the water at the intended angle, and must not show any evidence of improper operation.

[7] The lifeboat must not show any evidence of instability or dangerous characteristics during the launching sequence. Water entry angle will normally be between 40 degrees and 70 degrees from the horizontal. The momentum of the boat should move it away from the vessel after it enters the water.

[8] There must be no injury to any personnel in the boat attributable to the free-fall performance of the boat.

[9] If the inspector has reason to believe that the boat is not being launched in a safe and proper manner, the inspector may order that the test be repeated with the boat instrumented with acceleration monitoring equipment. Consult IMO Resolution MSC.81(70) entitled, Revised recommendation on Testing of Life-saving Appliances" Part 1/6.17 for information on measuring and evaluating acceleration forces. The monitoring and analysis should be done by, or under the supervision of, an independent laboratory accepted by the Commandant (CG-ENG-4) for this purpose. The test results are compared with the approval test data to determine whether or not the boat is being launched in a safe and proper manner.

(2) 10% overload test.

(a) Procedure. Load each seat in the lifeboat with 82.5 kg to 100 kg (181.5 lbs to 220 lb) of deadweight properly secured in place to simulate the weight of one person.

[1] Add additional weights using equipment lockers, if necessary, to bring the total boat weight to 1.1 times the condition "B" weight.

[2] The launching crew should launch the boat in free-fall by one of the two independent activation systems for the release mechanism which must be operated from inside the lifeboat. The boat should then be retrieved and examined with respect to the acceptance criteria outlined for the light load test above.

(3) Conduct this test if the launching system incorporates an adjustable ramp.

(a) Procedure.

[1] Load each seat in the lifeboat with 82.5 kg to 100 kg (181.5 lb. to 220 lb.) of deadweight properly secured in place to simulate the weight of one person. Add additional weights to bring the total boat weight to 1.2 times the condition "B" weight.

[2] Move the ramp throughout its intended range of operation.

[NOTE: The 1.2 times condition "B" loading is derived from IMO Resolution MSC.81(70) Part 2, Paragraph 6.1.13. It may be advantageous to conduct this test, remove some of the weight from the boat, and then conduct the 10% overload test.]

(b) Acceptance Criteria.

[1] The ramp shall be able to be satisfactorily adjusted to its intended operating positions.

[2] The ramp shall move from the stowed position to launching position using only gravity or stored mechanical power which is independent of the vessel's power supplies.

c. Davits And Winches For SOLAS Rescue Boats and fast rescue boats. Test and inspect launching systems for SOLAS rescue boats in the same way as those for lifeboats under Section P.2.a, in addition to the following test for recovery speed. This test applies to launching systems for boats approved and used solely as rescue boats, as well as those which hold dual approval as lifeboats and rescue boats, and which are designated as the ship's rescue boat(s).

(1) Procedure.

(a) Load the boat with a weight equivalent to its full complement of persons and equipment (total boat weight equal to condition "B"). Each occupant is considered to weigh 82.5 kg (181.5 lb), except for rescue boats installed prior to July 1, 2010 where each occupant is considered to weigh 75 kg (165 lbs). The full complement of persons is designated by the manufacturer, and will never be less than six. If the boat is also approved as a lifeboat, its full rescue boat complement will probably be less than the number of persons it can accommodate as a lifeboat.

(b) Determine hoisting speed by timing the boat as it rises through a measured distance marked on the side of the vessel or on the falls, or by any other reliable means. The speed measurement should be taken only after the winch has accelerated to full governed speed.

(2) Acceptance Criteria. The hoisting speed must be not less than 0.3 m/s (59 ft/min).

d. Launching Appliances For Davit Launched Liferafts and inflated rescue boats.

(1) Light Load. Operating the launching system at light load demonstrates that the mass of the raft is sufficient to overcome the frictional resistance of the winch, falls, sheaves, blocks, and associated gear.

(a) Procedure.

[1] Prepare a test load which can be suspended from the automatic release mechanism. The test load shall equal the weight of one of the launching station's liferafts and its equipment, plus 82.5 kg (181.5 lbs) simulating the weight of one person. An inflated davit-launched liferaft carrying a 82.5 kg weight may be used for the test load, but is not required.

[2] Lower the test weight from the embarkation deck by releasing the winch brake, and "launch" the weight using the normal automatic release procedure. If a non-buoyant test weight is used, the weight is "launched" onto a surface that will support its weight, rather than into the water. If this is not possible, an additional test will need to be devised to test the automatic release mechanism.

[3] Determine lowering speed by timing the test weight as it drops through a measured distance marked on the side of the vessel or on the fall, or by any other reliable means. The speed measurement should be taken only after the winch has accelerated to full governed speed.

[4] Recover the fall with the hand-operated quick-return mechanism.

(b) Acceptance Criteria.

[1] There shall be no deformation of or damage to the launching appliance or its connections to the vessel.

[2] The lowering speed for a launching appliance must be at least: $S = 0.7 (0.4 + (0.02 H))$, where S is the speed of lowering in m/s, and H is the height in meters from davit head to the waterline at the lightest seagoing condition (See figures P-1 and P-2). For the purposes of this calculation, H shall not be greater than 30, regardless of the actual height of the davit head. (in English units, the formula is: $S = 0.7 (79 + (1.2 H))$, where S is in ft/min and H is in ft, with H not greater than 99).

[3] The lowering speed for systems approved only under the 160.063 approval series shall be at least 40 ft/min (0.2 m/s).

[4] The brake must always be applied unless the operator, or a mechanism activated by the operator, holds the brake control in the "off" position. The test weight must begin to lower each time the brake is released. No additional force is permitted.

(c) Each winch drum shall be arranged so the fall wire winds onto the drum in one or two level wraps.

(d) The automatic release mechanism must open and release the test weight only after the apparatus is set to open automatically and the load of the test weight is off the fall.

(e) The operation of the hand-operated quick-return mechanism must be smooth, rapid, and easy enough for one person to recover the fall.

(2) 10% Overload.

(a) Procedure.

[1] Prepare a test load which can be suspended from the automatic release mechanism. The test load shall equal:

1.1*(W + M*P) (in kg)
1.1*(W + M*P) (in lb)

where W is the weight of one of the launching station's liferafts and its equipment, M is 75 kg (165 lbs) for passenger vessels or 82.5 kg (181.5 lbs) for all other vessels, and P is the number of persons the liferaft is approved to accommodate. An inflated davit-launched liferaft carrying additional weight may be used for the test load, but is not required. Alternatively, the test load may be:

1.1*SWL

where SWL is the least of the three approved working loads for the davit, winch, or automatic release mechanism.

[2] Lower the test weight from the embarkation deck by releasing the winch brake.

[3] Determine lowering speed by timing the test weight as it drops through a measured distance marked on the side of the vessel or on the fall, or by any other reliable means. The speed measurement should be taken only after the winch has accelerated to full governed speed.

[4] After the test weight passes through the measured distance, stop lowering by releasing the winch brake control. Then alternately release and apply the brake so the test weight stops at approximately 2 m (6 ft) intervals. Complete at least three start-stop cycles. The lowering operation should be carefully planned, so that the weight will not have to be raised to complete the start-stop cycles, since it may not be possible to raise the weight with the winch.

[5] "Launch" the weight using the normal automatic release procedure. If a non-buoyant test weight is used, the weight is "launched" onto a surface that will support its weight, rather than into the water. If this is not possible, an additional test will need to be devised to test the automatic release mechanism.

[6] Recover the fall with the hand-operated quick-return mechanism.

(b) Acceptance Criteria.

[1] There shall be no deformation of or damage to the launching appliance or its connections to the vessel.

[2] Except as indicated in [3] and [4] below, the lowering speed for launching appliances must be at least: S = 0.4 + (0.02 H) where S is the speed of lowering in m/s, and H is the height in meters from davit head to the waterline at the lightest seagoing condition (See figures P-1 and P-2). For the purposes of this calculation, H shall not be greater than 30, regardless of the actual height of the davit head. (In English units, the formula is S = 79 + (1.2 H) where S is in ft/min and H is in ft, with H not greater than 99.)

[3] The lowering speed for 160.163 approval series launching appliances must not exceed 1.3 m/s (256 ft/min).

[4] The lowering speed for systems approved only under the 160.063 approval series shall not exceed 120 ft/min (0.6 m/s).

[5] The brake must always be applied unless the operator, or a mechanism activated by the operator, holds the brake control in the "off" position. The test weight must begin to lower each time the brake is released. No additional force is permitted.

[6] The action of releasing the winch brake control must reapply the brake and bring the test weight to a stop within 1 m (39 in). No additional force on the winch brake control is permitted. The brake action must be smooth and positive.

[7] Each winch drum shall be arranged so the fall wire winds onto the drum in one or two level wraps.

[8] The automatic release mechanism must open and release the test weight only after the apparatus is set to open automatically and the load of the test weight is off the fall.

[9] The operation of the hand-operated quick-return mechanism must be smooth, rapid, and easy enough for one person to recover the fall.

(3) Exposed Wet Brake. Conduct this test if any winch brake surface is exposed to the weather.

(a) Procedure. Thoroughly wash down the exposed brake surfaces with water. Repeat the 10% overload test under Section 6.P.2.d.(2) while the brake surfaces are still wet.

(b) Acceptance Criteria. The brake must stop the winch when the brake surface is wet, but the 1 m stopping distance requirement does not apply.

(4) Simulated Towing Strain. Test the automatic release mechanism to determine that it can be manually released under a towing strain.

(a) Procedure.

[1] Use the 10% overload test weight (Section P.2.d.(2)).

[2] Apply a horizontal force to a floating test weight, or simulate a towing strain on a floating liferaft by applying a horizontal force to the non-buoyant test load. A sufficient force should be applied to the fall to bring it to an angle of approximately 5 degrees from vertical. The horizontal force may be applied by a motor vessel, a vehicle, manually, or any other appropriate means.

[3] A non-buoyant test load should be just above the surface, or just touching the surface, but with tension remaining on the fall.

[4] First, set the automatic release mechanism to the automatic position, then operate the release manually.

(b) Acceptance Criteria.

[1] The automatic release mechanism must not open with tension on the fall and the release set to the automatic position.

[2] The release mechanism must release the test load when manually operated by one person.

e. Lifeboats And SOLAS Rescue Boats.

(1) Coast Guard inspectors have traditionally examined every Coast Guard approved lifeboat at the factory. This system has been replaced by a system of factory production inspections by accepted independent labs, usually classification societies. Refer to the lifeboat or rescue boat's nameplate for the name of the lab that oversaw construction. The same lab must also be listed on the boat's

approval certificate. Refer to MISLE to CGMIX for the boat's certificate information if not available on board the vessel. Therefore, this operational test during the initial inspection for certification is or will be the Coast Guard's only opportunity to examine individual boats before they go into service on U.S. vessels.

(a) Lifeboats And SOLAS Rescue Boats. Operate each lifeboat and rescue boat in the water for at least two hours. The Coast Guard inspector does not need to be aboard the boat for the full two hours.

[1] During this time, the propulsion system is operated both forward and astern. At least one hour of this running time is with the propulsion system operating at full speed.

[2] Operate each boat system, such as any powered bilge pump, or the water spray system that are required on tanker lifeboats.

[3] Check all engine starting systems for proper operation. Lifeboats (approval series 160.135) and SOLAS rescue boats (approval series 160.156) must either have a manual starting system or a power starting system with two rechargeable energy sources, each capable of starting the engine.

Note: Existing lifeboats approved only under the 160.035 approval series must have a manual starting system, unless they have been retrofitted to meet SOLAS requirements. New installations of 160.035 lifeboats are only allowed as replacement-in-kind on existing vessels and offshore facilities. See 46 CFR 199.10(i). Check the list of accepted engines on CGMIX at https://cgmix.uscg.mil/Equipment/ to determine the required engine starting system. The engine(s) with which the lifeboat or rescue boat was approved are listed on the boat's approval certificate. See section P.3.e.(8) if problems are suspected with hydraulic engine starting systems.

[4] Check the pressure on any air supply system installed on a tanker lifeboat, but testing the air supply system should not be necessary on a new boat.

[5] Compare compass readings with several known bearings in different directions.

[6] Operate the emergency steering system in totally enclosed lifeboats.

(b) Hand-Propelled Lifeboats. Operate each hand-propelled lifeboat in the water for period of time sufficient to determine that it operates properly

both forward and astern. Compare compass readings with several known bearings in different directions.

(c) Oar-Propelled Lifeboats. New installations of oar-propelled lifeboats are only allowed as replacement-in-kind on existing vessels. Operate each oar-propelled lifeboat in the water with a crew sufficient for each oar and the tiller. Compare compass readings with several known bearings in different directions.

(d) Acceptance Criteria.

[1] The boat and each of its systems must operate properly without overheating or being damaged.

[2] The boat must not have any evident leakage through the hull or around any through-hull fitting.

[3] If compass errors exceed 10 degrees, the compass should be adjusted using the compensating mechanism to minimize the errors. A compass deviation card should be prepared and mounted on or near the compass.

[4] In totally enclosed, fire-protected lifeboats, the water spray system sprinkler heads must operate properly and provide a uniform flow of water over the surface of the lifeboat. Hatch and glass gaskets, dogging devices, and other closures should prevent entry of water.

(e) Battery Chargers. Batteries for engine starting and searchlights must have a means for recharging from the ship's power supply at a supply voltage not exceeding 50 Volts which can be disconnected at the boat embarkation station. Solar battery chargers may be an approved equivalent, however, determine that the battery charging systems are functional and in accordance with 46 CFR Subchapter J.

f. Boats And Davits Not Credited As Lifesaving Equipment. Some vessels by nature of their operation, carry special boats and launching equipment in addition to those required for lifesaving purposes. Survey launches, personnel boats, workboats, and similar craft are not subject to approval as lifesaving equipment, but should be sufficiently seaworthy for the waters in which they will be used. New boats may meet the applicable requirements of 33 CFR 183, but this is not a requirement if the boat will be used solely for commercial purposes. In this case, only the requirements of 46 CFR Subchapter C apply. Launching equipment for such craft is often intended only to handle an empty boat, with embarkation and debarkation taking place with the boat in the water. However, if the launching equipment results in personnel being suspended over water on wires, the launching equipment and attachments should be checked by a 10% overload test, similar to that for lifeboat and rescue boat launching appliances. After the test, the boat attachments should be visually checked for cracking and distortion. Appropriate data plates should be installed on both the winch and davit.

g. Hydrostatic Release Units. Check each hydrostatic release unit used in an item of lifesaving equipment, including those used in certain 406 MHz satellite EPIRBs. (See NVIC 4-86 for guidelines on installation of hydrostatic release units for survival craft.)

(1) Disposable Releases. Disposable hydrostatic releases must be marked with their expiration date using the tabs on the label. This must be done when the release is installed.

(2) Hidden Installations. Some hydrostatic releases, especially those used on certain EPIRBs, can not be readily seen when the equipment is properly installed. If the servicing date or expiration date on an installed hydrostatic release can not be readily seen, a label should be applied in a location where it can easily be seen. The label should indicate that the device uses a hydrostatic release, along with its servicing or expiration date.

(3) Weak Links. An important part of a float-free survival craft installation is the weak link which secures the survival craft painter to the vessel. Different weak link arrangements are used with different hydrostatic releases. The weak link arrangement must agree with the instructions of the hydrostatic release manufacturer, the survival craft manufacturer, or NVIC 1-83 in the case of life floats and buoyant apparatus.

h. Ring Lifebuoys, Life Floats, And Buoyant Apparatus. Check the covers of the ring lifebuoys, life floats, and buoyant apparatus to make sure they are intact and that buoyancy material is not exposed. Check cordage to make sure that it is good condition, and not weakened by weathering. Stowage arrangements should allow these devices to be readily cast loose, or to float free, as required by the regulations. Check painters for life floats and buoyant apparatus with the guidance in NVIC 1-83.

i. Ring Lifebuoy Quick-Release Device. A quick-release device is required for two ring lifebuoys on vessels on international voyages. The lifebuoys must have a floating electric water light and a self-activating smoke signal attached to them.

(1) Procedure. Operate each quick-release device. A self-activating smoke signal is not required for this test if a dummy device of comparable size and weight is used. A lanyard may be used to keep the ring buoy and its accessories from falling to the surface, or hitting the side of the vessel. Activation of the smoke signal, in particular, should be avoided.

(2) Acceptance Criteria. The quick-release device must be able to be operated from the bridge. The ring lifebuoy and its attachments must be properly released and drop clear of the side of the vessel. The smoke signal must be mounted properly so that it will ignite when the ring buoy is released.

j. Floating Electric Water Lights. Check the number and installation of each floating electric water light on board. Activate each one briefly to confirm that the battery is fresh and properly installed.

k. EPIRBs And SARTs.

(1) Test each Emergency Position Indicating Radio Beacon (EPIRB) and each Search and Rescue Radar Transponder (SART), except an EPIRB or SART in an inflatable liferaft. Use the test switch and output indicator to determine that the device is operating properly. The "TEST" switch or switch position can be used at any time, since no signal is transmitted. Avoid using the "ON" position to test an EPIRB. Note that some EPIRBs may have a "TEST/ON" position. These EPIRBs go through a test cycle before beginning to transmit an emergency signal. These EPIRBs should be switched back to the "ARMED" or "READY" position as soon as the test cycle is complete.

(2) Confirm that the operator has registered a 406 MHz satellite EPIRB with the National Oceanographic and Atmospheric Administration (NOAA). If operators need assistance with registration, they can use the following website to register: http://beaconregistration.noaa.gov/. Alternatively, registration inquiries can be addressed with NOAA at:

SARSAT Beacon Registration

National Oceanic and Atmospheric Administration
NSOF, E/SP053
4231 Suitland Road
Suitland, MD 20746
Phone: 301.817.4515
Toll free: 888.212.7283
Fax: 301.817.4565

l. Lifejackets, Immersion Suits, And Work Vests.

(1) Examine each lifejacket, immersion suit, and work vest to determine that the proper number are on board, and that each is in serviceable condition, equipped with retroreflective material, and properly marked with the name of the vessel. (See section 18.H.4.e and NVIC 14-92 if "Extended Size" lifejackets are used.) For an initial inspection, lifejackets, immersion suits, and work vests will usually be new and will not require a detailed inspection. However, if older devices are used, they should be inspected as in section P.3.m or section P.3.n. If needed to keep track of devices which have been inspected, the marine inspector may mark or stamp the lifejackets, immersion suits, and work vests to indicate that they have been inspected and passed. (See 18.H.4 and 18.H.5 of NVIC 14-92 for information on stowage and other special considerations.)

(2) All lifejackets and immersion suits placed on board U.S. flag SOLAS ships after July 1, 2010 must have an approval number in the format 160.155/200 or above, 160.171/200 or above, respectively. See NVIC 03-10.

NOTE: Some regulations may indicate that lifejackets will be stamped "passed" once they have been inspected, however, inspectors may regard this as optional unless an operator insists that the stamps be applied.

m. Lifejacket Lights. Each lifejacket and immersion suit on a vessel operating on ocean, coastwise, or Great Lakes voyages, must be equipped with an approved light under approval series 160.012 or 160.112. The light must be positioned near the shoulder so it will be above water when a person is wearing the lifejacket or immersion suit in the water. Except for one-use lights, such as chemiluminescent lights (chemical lights) and those with water-activated batteries, turn each light on and off to make sure it operates. The light or the power source must be marked with a date of expiration, unless it is a standard battery such as a 9-volt or D-cell. Operators of vessels operating in near-freezing waters should be aware that battery and light operation degrades in cold temperatures. In particular, chemiluminescent type lights should be avoided on vessels operating in near-freezing waters.

n. Whistles. Lifejackets and immersion suits on vessels on international voyages must each have a whistle attached to the device with a lanyard. The lanyard must be long enough to allow the whistle to reach the mouth of the wearer. The whistle must be a ball-type or multi-tone whistle of corrosion-resistant construction. The lanyard and whistle must both be in good, operable condition.

o. Distress Signals. Depending upon its service, the vessel may be required to carry flares or smoke signals in an appropriate stowage location in or near the pilothouse. Flares and smoke signals must be approved, of the appropriate type required by SOLAS or the vessel regulations in 46 CFR Subchapter W and/or corresponding subchapter under which the vessel is certificated, as applicable, and not past their expiration date.

p. Line Throwing Appliances. Check each line-throwing appliance to make sure that it has the proper stowage arrangements, and that each dated component has not expired. Each line-throwing appliance must also have the equipment on the list provided with the approved appliance. Make sure that an auxiliary line of the correct size and length is provided, and that it is in good condition. If the logbook shows that a required test firing is due, witness a test firing if it can be safely carried out where the inspection takes place.

q. Pilot Ladders And Embarkation - Debarkation Ladders. Though not strictly "lifesaving equipment," pilot ladder inspections are covered here because of their similarity to embarkation - debarkation ladders. Any new pilot ladder is required to be approved under approval series 163.003. Rope embarkation - debarkation ladders are approved under approval series 160.117, or are approved as equivalent to chain ladders under approval series 160.017. Rope embarkation-debarkation ladders are similar to approved pilot ladders, except that embarkation - debarkation ladders are not required to have spreader steps. Chain ladders are approved under approval series 160.017. All ladders must be a single length of ladder.

(1) See IMO Assembly Resolution A.1045(27) for information on pilot ladder installation and other pilot transfer arrangements.

(2) Any new embarkation-debarkation ladder on a ship certificated for international voyages, must.be a rope ladder. These ladders must extend from the deck to the waterline in the lightest seagoing condition at a 15 degrees adverse list. Any other ladder must be either an approved chain ladder or rope ladder. These ladders must extend from the deck to the waterline in the lightest seagoing condition, with no list assumed.

(3) The embarkation - debarkation ladder must be secured to the deck adequately, and must be ready to be deployed.

(4) Approved pilot ladders and embarkation-debarkation ladders are manufactured under carefully controlled conditions, under the inspection of an independent laboratory. This assures that the ladders will be well constructed and suitable for their intended purpose. Steps are assembled to the ladder at regular intervals in a safe and proper manner. Side ropes are properly straightened and tensioned, so that the steps remain level and safe to use. These ladders, especially pilot ladders, are subject to extremely hard use, and steps will occasionally be damaged. For this reason, replacement steps are also approved. These steps are white or yellow, rather than the orange of the original steps, so that they are readily apparent to anyone inspecting or using the ladder. This conspicuous marking helps draw attention to steps which have not been installed under the same careful conditions as those of the original ladder. Vessels under Coast Guard inspection may not field assemble pilot ladders and embarkation¬ - debarkation ladders. Such ladders will not be considered to be approved, even if assembled from approved replacement steps.

r. Powered Pilot Hoists. Per IMO Resolution MSC.308(88), pilot hoists may not be used on SOLAS ships effective July 1, 2012. Though not strictly "lifesaving equipment," powered pilot hoist inspections are covered here because of their similarity to other lifesaving equipment inspections. The initial inspection should also include a comparison of the manufacturer's installation instructions with the mounting and power connection provisions provided on the vessel.

(1) Suspension Cables.

(a) Procedure. Inspect suspension cables for proper routing. Consult the manufacturer's instructions for specific guidance.

(b) Acceptance Criteria. Suspension cables must be properly routed through sheaves and blocks. Connections at the ends of the suspension cables, such as clamping or socket arrangements must be properly made. All sheaves must be properly lubricated and turn freely.

(2) Light Load. Operating the pilot hoist at light load demonstrates that the mass of the ladder or lift platform is sufficient to overcome the frictional resistance of the winch, falls, sheaves, blocks, and associated gear. This test can generally be completed quickly, since no special loading is required.

(a) Procedure.

[1] The empty ladder or lift platform should be used for this test.

[2] Lower the hoist by operating the control lever until the ladder or lift platform reaches the water or its lowest extent of travel. Release the control lever several times while lowering.

[3] Raise the hoist by operating the control lever until the ladder or lift platform reaches its upper extent of travel. Release the control lever several times while hoisting.

[4] Lowering and hoisting speed do not need to be measured unless the hoist appears to be operating in an inadequate or unsafe manner.

(b) Acceptance Criteria.

[1] There shall be no deformation of or damage to the pilot hoist or its connections to the vessel.

[2] When the control lever is released, it must automatically return to the off position, and bring the ladder or lift platform to a safe stop. The hoist must begin to move each time the control lever is operated. No additional force is permitted.

[3] The suspension cables must wind onto the drum in a single level wrap.

[4] For a multiple suspension cable system, the cables must wind off the drums at the same rate when lowering. The cables must wind onto the drums evenly and at the same rate when hoisting.

(3) 10% Overload.

(a) Procedure.

[1] Load the ladder or lift platform with deadweight so that the total load including the ladder or lift platform equals 1.1 times the working load. The working load will be shown on the nameplate of an approved pilot hoist.

[2] Lower the hoist by operating the control lever until the ladder or lift platform reaches the water or its lowest extent of travel. Release the control lever several times while lowering.

[3] Raise the hoist by operating the control lever until the ladder or lift platform reaches its upper extent of travel. Release the control lever several times while hoisting.

[4] Lowering and hoisting speed do not need to be measured unless the hoist appears to be operating in an inadequate or unsafe manner.

[5] Disconnect the power source. With one person operating the hand operating device, lower and raise the ladder or lift platform a short distance. If difficulty is encountered, the weight may be reduced to equal the working load, and the test repeated.

(b) Acceptance Criteria.

[1] There shall be no deformation of or damage to the pilot hoist or its connections to the vessel.

[2] When the control lever is released, it must automatically return to the off position, and bring the ladder or lift platform to a safe stop. The hoist must begin to move each time the control lever is operated. No additional force is permitted.

[3] The suspension cables must wind onto the drum in a single level wrap.

[4] For a multiple suspension cable system, the cables must wind off the drums at the same rate when lowering. The cables must wind onto the drums evenly and at the same rate when hoisting.

[5] For pilot hoists with an emergency stop switch operated by a control wire on the ladder or lift platform, the untended control wire must feed out properly with the ladder or lift platform. The pilot hoist operation must not be affected by the mass of the fully extended control wire.

[6] The hand operating device must be capable of lowering and raising the working load.

(4) Emergency Stop Control.

(a) Procedure. Once the hoist has been demonstrated to be in satisfactory operating condition, put a person on the ladder or lift platform. Lower the hoist, and with the control lever in position to lower the hoist, the person on the ladder or lift platform operates the emergency stop control. Repeat the test of the emergency stop control while hoisting. Test the proper operation of any other control provided on the ladder or lift platform.

(b) Acceptance Criteria. The emergency stop control must bring the ladder or lift platform to a safe stop regardless of the position of the on-deck control lever. Each other control on the ladder or lift platform must operate properly and safely.

s. Abandon-Ship Simulation. Hold an abandon-ship simulation. Determine the time required for all persons on board to be launched into the water in survival craft. This test is not required if the Coast Guard has witnessed a successful test on a sister vessel with the same lifesaving appliance arrangements.

(1) Procedure.

(a) Start timing when the signal to abandon ship is given, with all persons at the locations identified in the station bill (muster list).

(b) No preparation of the survival craft or launching appliance is permitted until the signal is given.

(c) This simulation must include loading and launching of sufficient survival craft to demonstrate that the acceptance criteria can be met.

(d) If the survival craft include davit-launched liferafts, one example of each launching appliance type and arrangement on the ship must be tested. If so desired, persons may be used only in the preparing and loading operations, and ballast may be substituted for the lowering and launching part of the test. The time should be recorded for the sequence of preparing, loading, and launching all of the liferafts intended to be launched from the launching station. However, if more than three liferafts are intended to be launched from the launching station, the test may be limited to three liferafts. The total time required to launch all of the liferafts can be extrapolated from this data.

(e) If the vessel is equipped with marine evacuation systems (MES), the simulation must include full deployment of at least one system, including the launching and inflation of associated liferafts. The time should be recorded for the sequence of preparing, loading, and launching all of the liferafts intended to be launched from the launching station. However, if more than three liferafts are intended to be launched from the launching station, the test may be limited to three liferafts. The total time required to launch all of the liferafts can be extrapolated from this data.

(f) During the simulation, care must be taken to minimize the hazards associated with the loading and unloading of boats. Casualties have occurred because adequate safety precautions were neglected or because personnel took needless chances.

(2) Acceptance Criteria.

(a) For cargo ships, the abandonment time must be 10 minutes or less.

(b) For passenger ships, the abandonment time must be 30 minutes or less.

t. Abandon-Ship Drill And Fire Drill. Once the vessel's initial operating crew is aboard, conduct an abandon-ship drill and a fire drill as described in section P.3.v below.

3. **Subsequent Inspections For Certification**

Each item of lifesaving equipment is inspected to determine that it is in serviceable condition. Each item not in serviceable condition is repaired or replaced. Each item of survival equipment with an expiration date on it is replaced if the expiration date has passed. The following inspections and tests are intended for each inspection for certification other than the initial inspection.

a. Davit And Winch Launching Systems For Lifeboats. Including Auxiliary Launching Systems For Free-Fall Lifeboats. (See C.2.H.7 of this manual for special considerations concerning lifeboat handling equipment.)

(1) Falls.

(a) Procedure. Inspect falls for broken strands, damaging corrosion and proper lubrication. When the boat is in the stowed position, the sections of the falls that are bent over the sheaves can be crushed and flattened making the falls more prone to damage in this area; pay particular attention to these sections of the falls prior to and during the full load test. In addition, sheaves are designed to handle wire rope of a particular diameter. Over years of use the groove of the sheave can be widened to the point that the wire rope is not properly supported in its travel and can be damaged due to flattening. Should the wire rope appear separated during the inspection, consider gauging the sheaves with a groove gauge. Since falls can not be internally inspected, one of the maintenance procedures in paragraph (c) is strongly recommended for all vessels, even if not specifically required by the regulations.

(b) Acceptance Criteria. Falls must be properly lubricated and free of broken strands and damaging corrosion. Connections at the ends of the falls, such as clamping or socket arrangements must be properly made. All sheaves must be properly lubricated, turn freely, and not show excessive wear.

(c) Maintenance - SOLAS Ships and MODUs. Each fall used in a launching appliance on a SOLAS ship or MODU may comply with either 46 CFR 199.190(j) or SOLAS III/20.4. A corrosion-resistant tag is recommended on each fall to record the date the new fall was installed and when it was turned end for end. Make sure the full load test in P.3.a.(3) is conducted after falls are turned or replaced.

(2) Light Load. Operating the launching system at light load demonstrates that the mass of the boat is sufficient to overcome the frictional resistance of the winch, falls, sheaves, blocks, and associated gear. For boats with a hydrostatic lock on the release mechanism, it verifies that the lock operates at the lowest operational hydrostatic pressure. This test can generally be completed quickly, since no special loading is required for a fully equipped boat. The test is especially important on older installations to test the condition of rollers, bushings, bearings, and other rolling and sliding parts.

(a) Procedure.

[1] The boat should approximate its condition "A" weight for this test, with added weight of equipment and fuel on board. Precise loading and load measurement is not necessary, however. In addition, one person may be on board to operate an on-board winch brake control or the release mechanism. If additional personnel are needed to complete the test and to recover the boat, they may board when the boat reaches the water.

[2] Release the gripes, if necessary. Tricing, frapping, and/or bowsing gear do not need to be used for this test if they are not needed.

[3] Lower the boat by releasing the winch brake. If the winch brake is arranged for control from within the boat, a person on board the boat should operate the winch brake control.

[4] Lowering speed does not need to be measured unless the winch and winch brake do not appear to be operating properly. (Refer to section 6.P.2.a on initial inspections for lowering speed requirements.)

[5] Launch the boat into the water using the normal launching procedure. There are three different operational modes for approved release mechanisms, with the "normal" procedure being different for each.

- Most 160.133 approval series release mechanisms have a hydrostatic lock which allows the hooks to be released once the boat is in the water; only lifeboats approved under approval series 160.135 and installed after January 1, 2013 will have a release mechanism with a hydrostatic interlock or some other means to ensure the lifeboat is waterborne before the release mechanism can be activated.. With the keel of the boat at or just in the water and tension on the falls, it should be verified that the hydrostatic lock prevents operation of the release mechanism. Then with the boat lowered into the water, the hydrostatic lock should open and permit operation of the release mechanism.

- An automatic release mechanism is sometimes used on a boat or survival capsule with a single fall launching system. Once set or cocked, these devices release as soon as tension is off the fall. Set these devices for automatic operation for this test. If a person will be on board the boat as it is lowered, that person should set the release mechanism for automatic operation just before the boat reaches the water.

- On-load release mechanisms such as "Rottmer" gear can release the boat whenever the release handle is moved, whether the boat is in the water or not. Persons in command of the boat and operating this mechanism must fully understand the danger of serious injury or death resulting from premature operation. Release the boat from the falls using the on-load release mechanism control as the boat reaches the water. The keel of the boat should be at or in the water, but there should still be tension on the falls when the release mechanism is operated. The safety pin should not be removed until the boat is in position for release.

[6] Recover the boat with the winch. Anyone on board the boat should disembark when it reaches deck level. No one should be on board the boat when the weight of the davit is taken up by the winch, and the davit moves into its stowage position. This is when most fall and fall attachment failures occur.

(b) Acceptance Criteria.

[1] There shall be no deformation of or damage to the launching appliance or its connections to the vessel.

[2] The brake must be a "deadman" type, always applied unless the operator holds the control handle or mechanism in the position to lower the boat. If the operator releases the brake handle/mechanism, the handle/mechanism returns to the "stop" position, thus applying the brake and stopping the boat. No additional force is permitted.

[3] Each winch drum shall be arranged so the fall wire winds onto the drum in a level wrap. There shall be no more than one layer of wire on the drum when the davit is in stowed position, except that if the maximum fleet angle is not more than 4 degrees, two layers of wire are acceptable on a grooved drum. Winches must be demonstrated to wind the falls evenly on and off the drum, regardless of whether the drum is grooved or smooth. The fleet angle shall not exceed 8 degrees in any winch installation.

[4] For a multiple fall system, the falls must wind off the drums at the same rate when lowering. The falls must wind onto the drums evenly and at the same rate when hoisting.

[5] For launching appliances arranged for control from within the boat, there are two basic types of control. One of these types uses a control wire that pays out as the boat lowers. The control wire must properly operate the winch brake throughout the launching sequence. There must be sufficient length of control wire available inside the boat to operate the winch brake

until the boat is released from the falls. The other type is a "pull -and-go" system. An operator in the boat pulls a control lever or handle on the launching appliance which is accessible from a position on board the boat. Once the control is activated, it holds the brake control in the "lower" position, until a crew member on deck returns it to "stop."

[6] The release mechanism must open all hooks simultaneously and release the boat into the water in the intended manner. The release mechanism must operate freely, without excessive force being required, and be maintained in accordance with manufacturer's instructions. Pay special attention to painting of working parts, cleaning and replacing grease (if used), condition of cables, universal ,joints, and overall cleanliness. Hooks that can not be operated without excessive force should not be forced.

(3) Full Load.

(a) Procedure.

[1] The boat must be in its embarkation position. Tricing pendants, if any, must be disconnected. The boat should be held alongside the ship during loading by means of the installed frapping, and/or bowsing gear.

[2] Load the boat so that its total weight equals the condition "B" weight shown on its data plate. Hold the boat in position for at least ten minutes and check for deformation, especially at davit and winch foundations and other load-bearing members.

[3] Lower the boat using the normal lowering procedure, using the on-deck winch control position.

[4] Lowering speed does not need to be measured unless the winch and winch brake do not appear to be operating properly. (Refer to section 6.P.2.a on initial inspections for lowering speed requirements.)

[5] Alternately release and apply the brake so the boat stops at approximately 2 m (6 ft) intervals. Complete at least three start-stop cycles. The lowering operation should be carefully planned, so that the boat will not have to be raised to complete the start-stop cycles. Most winches will not be capable of raising the loaded boat.

[6] Stop lowering just as the boat reaches the water. The keel of the boat should be at or in the water, but there should still be tension on the falls. Release the boat from the falls using the on-load release mechanism control. Release mechanisms with a hydrostatic interlock will require use

of the emergency override device to permit on-load release. . For lifeboats installed after January 1, 2013, the interlock override will include special mechanical protection that must be deliberately destroyed, e.g. by breaking a protective glass or translucent cover. The restoration of the release mechanism in these cases should be planned for, and may require a service technician.

[7] Unload the boat, recover it with the winch, and return it to its stowed position. Observe operation of the limit switches as the davit approaches the stowed position. Anyone on board the boat should disembark when the boat reaches deck level. No one should be on board the boat when the weight of the davit is taken up by the winch, and the davit moves into its stowage position. This is when most fall and fall attachment failures occur.

(b) Acceptance Criteria.

[1] There shall be no deformation of or damage to the launching appliance or its connections to the vessel.

[2] The brake must be a "deadman" type, always applied unless the operator holds the control handle or mechanism in the position to lower the boat. If the operator releases the brake handle/mechanism, the handle/mechanism returns to the "stop" position, thus applying the brake and stopping the boat. No additional force is permitted.

[3] The action of releasing the winch brake control must bring the boat to a stop. No additional force on the winch brake control is permitted. The brake action must be smooth and positive.

[4] Each winch drum shall be arranged so the fall wire winds onto the drum in a level wrap.

[5] For a multiple fall system, the falls must wind off the drums at the same rate when lowering. The falls must wind onto the drums evenly and at the same rate when hoisting.

[6] For launching appliances arranged for control from within the boat, the untended control wire must feed out properly with the boat. The winch brake operation must not be affected by the mass of the fully extended control wire.

[7] The release mechanism must open all hooks simultaneously and release the boat into the water.

[8] The limit switches must disconnect the winch power source 0.3 m (12 in) or more before the davit reaches its fully stowed position.

(4) Special Circumstances. Inclement weather or port conditions may force delay or alteration of the light load and full load tests, especially for MODUs on site. Inspectors should not be delayed for extended periods, waiting for weather to clear. Operators should be allowed to use alternate procedures which accomplish the intent of the tests, such as:

(a) Conduct the light load and full load tests without lowering the boats to the water and releasing them.

(b) Arrange a safety sling forward and aft on the boat. With all the slack out of the tricing pendants, release the boat onto the pendants to prove the operation of the releasing gear.

NOTE: This procedure may not be possible or safe with all launching arrangements.

(c) Operate boat engines in the stowed position or in the water without releasing them from the falls. If the engines are operated with the boat out of the water, an external source of cooling water may need to be supplied to enable extended operation.

(d) The operator should complete the tests when conditions permit. The inspector should issue a Vessel/Facility Inspection Requirements, Form CG-835 requiring completion of the tests to the satisfaction of an attending marine inspector, or alternatively requiring submission of log entries attesting to the satisfactory completion of the tests.

b. Free-Fall Lifeboat Launching Systems. Free-fall lifeboat and launching system installation tests are conducted with the vessel on an even keel. The vessel shall not be lighter than its lightest seagoing draft.

(1) Light Load.

(a) Procedure.

[1] The boat should be arranged for launching by a launching crew on board the boat.

[2] The boat should approximate its condition "A" weight for this test, with added weight of equipment and fuel on board. Precise loading and load

measurement is not necessary. In addition, the minimum launching crew should be on board to operate the on-board launching control.

[3] The launching crew should launch the boat in free-fall by one of the two independent activation systems for the release mechanism which must be operated from inside the lifeboat. The boat should then be retrieved and examined with respect to the acceptance criteria below.

(b) Acceptance Criteria.

[1] There shall be no deformation of or damage to the launching appliance or its connections to the vessel.

[2] There shall be no deformation of or damage to any seat or seat mounting in the lifeboat.

[3] There shall be no cracks or other structural damage to the hull of the lifeboat or any other structurally important part of lifeboat. Cracks in structural members of a free-fall lifeboat indicate that the structure must be replaced.

[4] There shall be no cracks in non¬structural members which could break loose during a free-fall launching.

[5] The free-fall release mechanism must operate properly and release the boat from the launching appliance.

[6] The launching system must operate smoothly, must launch the boat into the water at the intended angle, and must not show any evidence of improper operation.

[7] The lifeboat must not show any evidence of instability or dangerous characteristics during the launching sequence. Water entry angle will normally be between 40 degrees and 70 degrees from the horizontal. The momentum of the boat should move it away from the vessel after it enters the water.

[8] There shall be no injury to any personnel in the boat attributable to the free-fall performance of the boat.

[9] If the inspector has reason to believe that the boat is not being launched in a safe and proper manner, the inspector may order that the test be repeated with the boat instrumented with acceleration monitoring equipment. The monitoring and analysis should be done by, or under the supervision of, an independent laboratory accepted by the Commandant (G-ENG-4) for this purpose. The test results are compared with the approval test data to determine whether or not the boat is being launched in a safe and proper manner. . See IMO Resolution MSC.81(70), Revised recommendation on testing life-saving appliances", Part 1/6.17.

(2) Full Load.

(a) Procedure.

[1] Load each seat in the lifeboat with 75 or 82.5 kg (165 lb to 181.5 lbs) of deadweight properly secured in place to simulate the weight of one person. Only freefall lifeboats approved before July 1, 2010, should use 75 kg weights. Add additional weights to seats or equipment lockers, if necessary, to bring the total boat weight to the condition "B" weight.

[2] The launching crew should launch the boat in free-fall by one of the two independent activation systems for the release mechanism which must be operated from inside the lifeboat. The boat should then be retrieved and examined with respect to the acceptance criteria outlined for the light load test above.

c. Davits and Winches for SOLAS Rescue Boats and Fast Rescue Boats. Test and inspect launching systems for SOLAS rescue boats in the same way as those for lifeboats under section P.3.a. The hoisting speed for a rescue boat launching appliance must be not less than 0.3 m/s (59 ft/min). If observation or rough timing of the hoisting operation indicates that this requirement may not be being met, the test in section P.2.c.(l) may need to be repeated.

d. Launching Appliances For Davit Launched Liferafts.

(1) Falls.

(a) Procedure. Inspect falls for broken strands, damaging corrosion and proper lubrication. In the stowed position, the sections of the falls that are bent over the sheaves can be crushed and flattened making the falls more prone to damage in this area; pay particular attention to these sections of the falls prior to and during the full load test. In addition, sheaves are designed to handle wire rope of a particular diameter. Over years of use the groove of the sheave can be widened to the point that the wire rope is not properly supported in its

travel and can be damaged due to flattening. Should the wire rope appear separated during the inspection, consider gauging the sheaves with a groove gauge. Since falls can not be internally inspected, one of the maintenance procedures in Paragraph (c)is strongly recommended for all vessels, even if not specifically required by the regulations.

(b) Acceptance Criteria. Falls must be properly lubricated and free of broken strands and damaging corrosion. Connections at the ends of the falls, such as clamping or socket arrangements must be properly made. All sheaves must be properly lubricated, turn freely, and not show excessive wear.

(c) Maintenance - SOLAS Ships and MODUs. Each fall used in a launching appliance on a SOLAS ship or MODU may comply with either 46 CFR 199.190(j) or SOLAS III/20.4. A corrosion-resistant tag is recommended on each fall to record the date the new fall was installed and when it was turned end for end. Make sure the full load test in Section P.3.a.(3) is conducted after falls are turned or replaced.

(2) Light Load. Operating the launching system at light load demonstrates that the mass of the raft is sufficient to overcome the frictional resistance of the winch, falls, sheaves, blocks, and associated gear. The test is especially important on older installations to test the condition of bushings, bearings, and other rolling and sliding parts.

(a) Procedure.

[1] Prepare a test load which can be suspended from the automatic release mechanism. The test load shall equal the weight of one of the launching station's liferafts and its equipment, plus 75 kg (165 lb) or 82.5 kg, as appropriate, simulating the weight of one person. An inflated davit-launched liferaft carrying a 75 kg or 82.5 kg weight may be used for the test load, but is not required.

[2] Lower the test weight from the embarkation deck by releasing the winch brake, and "launch" the weight using the normal automatic release procedure. If a non-buoyant test weight is used, the weight is "launched" onto a surface that will support its weight, rather than into the water. If this is not possible, an additional test will need to be devised to test the automatic release mechanism.

[3] Lowering speed does not need to be measured unless the winch and winch brake do not appear to be operating properly. Refer to Section P.2.d.(1) for a lowering speed test.

[4] Recover the fall with the hand-operated quick-return mechanism.

(b) Acceptance Criteria.

[1] There shall be no deformation of or damage to the launching appliance or its connections to the vessel.

[2] The brake must always be applied unless the operator, or a mechanism activated by the operator, holds the brake control in the "off" position. The test weight must begin to lower each time the brake is released. No additional force is permitted.

[3] Each winch drum shall be arranged so the fall wire winds onto the drum in one or two level wraps.

[4] The automatic release mechanism must open and release the test weight only after the apparatus is set to open automatically and the load of the test weight is off the fall

[5] The operation of the hand-operated quick-return mechanism must be smooth, rapid, and easy enough for one person to recover the fall.

(3) Full load.

(a) Procedure.

[1] Prepare a test load which can be suspended from the automatic release mechanism. The test load shall equal:

$1.1*(W + M*P)$ (in kg)

$1.1*(W + M*P)$ (in lb)

where W is the weight of one of the launching station's liferafts and its equipment, M is 75 kg (165 lbs) for all passenger vessels or 82.5 kg (181.5 lbs) for all other vessels built after July 1, 2010, and P is the number of persons the liferaft is approved to accommodate. An inflated davit-launched liferaft carrying additional weight may be used for the test load, but is not required. Alternatively, the test load may be:

$1.1*SWL$

where SWL is the least of the three approved working loads for the davit, winch, or automatic release mechanism.

[2] Lower the test weight from the embarkation deck by releasing the winch brake.

[3] Lowering speed does not need to be measured unless the winch and winch brake do not appear to be operating properly. Refer to section P.2.d.(2) for the lowering speed test during initial inspections.

[4] Alternately release and apply the brake so the test weight stops at approximately 2 m (6 ft) intervals. Complete at least three start-stop cycles. The lowering operation should be carefully planned, so that the weight will not have to be raised to complete the start-stop cycles, since it may not be possible to raise the weight with the winch.

[5] "Launch" the weight using the normal automatic release procedure. If a non-buoyant test weight is used, the weight is "launched" onto a surface that will support its weight, rather than into the water. If this is not possible, an additional test will need to be devised to test the automatic release mechanism.

[6] Recover the fall with the hand-operated quick-return mechanism.

(b) Acceptance Criteria.

[1] There shall be no deformation of or damage to the launching appliance or its connections to the vessel.

[2] The brake must always be applied unless the operator, or a mechanism activated by the operator, holds the brake control in the "off" position. The test weight must begin to lower each time the brake is released. No additional force is permitted.

[3] The action of releasing the winch brake control must reapply the brake and bring the test weight to a stop within 1 m (39 in). No additional force on the winch brake control is permitted. The brake action must be smooth and positive.

[4] Each winch drum shall be arranged so the fall wire winds onto the drum in one or two level wraps.

[5] The automatic release mechanism must open and release the test weight only after the apparatus is set to open automatically and the load of the test weight is off the fall.

[6] The operation of the hand-operated quick-return mechanism must be smooth, rapid, and easy enough for one person to recover the fall.

e. Lifeboats And SOLAS Rescue Boats.

(1) Operational test.

(a) Motor Lifeboats And SOLAS Rescue Boats. Operate each motor lifeboat and SOLAS rescue boat in the water. Conduct the following tests after engine has reached normal operating temperature.

[1] Operate the propulsion system at full speed both forward and astern.

[2] Operate each boat system, such as any powered bilge pump, or water spray system.

[3] Compare compass readings with several known bearings in different directions.

[4] Operate the emergency steering system in totally enclosed lifeboats.

(b) Hand-Propelled Lifeboats. Operate each hand-propelled lifeboat in the water for period of time sufficient to determine that it operates properly both forward and astern. Compare compass readings with several known bearings in different directions.

(c) Oar-Propelled Lifeboats. Operate each oar-propelled lifeboat in the water with a crew sufficient for each oar and the tiller. Compare compass readings with several known bearings in different directions.

(d) Acceptance Criteria.

[1] The boat and each of its systems must operate properly without overheating or being damaged.

[2] The boat must not have any evident leakage through the hull or around any through-hull fitting.

[3] If compass errors exceed 10 degrees, the compass should be adjusted using the compensating mechanism to minimize the errors. A compass deviation card should be prepared and mounted on or near the compass.

[4] In totally enclosed, fire-protected lifeboats, the water spray system sprinkler heads must operate properly and provide a uniform flow of water over the surface of the lifeboat. Hatch and glass gaskets, dogging devices, and other closures should prevent entry of water.

(2) Air Supply System. The air supply system in gas-protected and fire-protected totally enclosed lifeboats supplies engine combustion air and breathing air when the lifeboat operates in areas of fire on the water or toxic gas atmospheres. These systems should be maintained comparably to breathing air systems used by commercial divers. See 46 CFR 197, Subpart B, and in particular, § 197.340(i) for breathing air standards. Over time, oxidation of metal compressed gas cylinders can reduce oxygen content of air to unacceptably low levels. The inspector does not need to witness the following inspections and tests, if the operator can provide records indicating appropriate air supply system servicing on an annual basis.

(a) Procedure.

[1] Determine that the air regulator is operating properly either by discharging one or more of the air supply cylinders through the regulator, or by checking the flow rate on a test apparatus.

[2] Either have an air sample tested for oxygen content, or empty the cylinders, and refill from an appropriate air supply. If cylinders are emptied, conduct an internal visual examination, if possible.

[3] Check cylinders for compliance with 46 CFR 147.60, including hydrostatic testing every five years.

(b) Acceptance Criteria.

[1] The air regulator must operate properly.

[2] Each air supply cylinder must be fully charged and meet 46 CFR 147.60. (See air supply system placards or lifeboat manufacturer's manual for proper system pressure.)

[3] The air supply must be suitable for breathing.

(3) Air Tank Buoyancy Units. Test each air tank buoyancy unit for air tightness.

Note: By 1965, lifeboats were nolonger produced with air tanks for buoyancy. Many older lifeboats have had their air tanks filled with approved buoyant material, so that they no longer rely on air tanks for buoyancy.

(a) Procedure. Using the test nipple on the tank, apply an air pressure of 2 ft of water (610 mm of water, 0.9 psig, or 6 kPa).

(b) Acceptance Criteria. The tank must hold pressure for at least 10 minutes to be considered airtight.

(4) Water Tanks. Water tanks are normally used for the storage of packaged water and provisions. However, they are also intended to hold collected rain water or desalinated water. Therefore, they must be watertight. This shall be demonstrated by the air tightness test described in the preceding paragraph, or by filling them with water and watching for leaks.

(5) Inflated And Rigid/Inflated Rescue Boats. Make sure that the buoyancy compartments are airtight. Once topped up, buoyancy compartments must remain firm for at least 24 hours. If a pressure check is made to determine air tightness, appropriate temperature and barometric pressure corrections must be made. Repair and maintenance of inflated rescue boats must be in accordance with the manufacturer's instructions. Repairs must be made at a servicing facility with the appropriate equipment and skills to affect repairs, except for emergency repairs carried out on board the vessel. Refer to NVIC 04-07.

(6) Battery Chargers Batteries for engine starting and searchlights must have a means for recharging. Determine-that the battery charging systems are functional and in accordance with 46 CFR Subchapter J.

(7) Survival Equipment. Check the condition and quantity of equipment stowed in the lifeboat. (NVIC 2-92 contains guidance). If the equipment is known to have been well-maintained by the crew, this inspection may be conducted on a spot-check basis.

(8) Hydraulic Engine Starting Systems. An hydraulic engine starting system can either be a required system, or an optional system. Check the list of accepted engines on the CGMIX website to determine the required engine starting system, and in some cases the hydraulic start is indicated on the lifeboat’s approval certificate.

(a) Engines started exclusively by hydraulic systems will have two separate accumulators, either of which should be able to start the engine with a comfortable margin. A hand pump is provided to recharge accumulators in order to provide the required manual starting function. An engine-driven pump may also be provided to recharge accumulators after the engine starts.

(b) Optional hydraulic systems may be provided on engines that have qualified hand crank starting systems, batteries, or both. Such systems may have only one accumulator.

(c) Check the pressure in each accumulator using the installed gauge. Make sure the system will hold pressure for at least four hours without any noticeable pressure drop, and will start the engine. Make sure that the hand pump, if required, can recharge the accumulators.

f. Inflatable Lifesaving Appliances. Check each inflatable liferaft, inflatable buoyant apparatus, inflatable Marine Evacuation System (MES), and inflatable lifejacket to determine that it has been properly inspected and serviced.

(1) Each inflatable liferaft, inflatable buoyant apparatus, and inflatable MES is serviced:

(a) At an approved servicing facility in accordance with the servicing procedure under 46 CFR Subpart 160.051, or 46 CFR Subpart 160.151, or an alternative approved servicing procedure for an MES;

(b) Every 12 months or not later than the next vessel inspection for certification, provided the total time since the date of the last servicing does not exceed 17 months; and

(c) Whenever the container of the raft is damaged, or the straps or seal broken.

(2) Each inflatable lifejacket is serviced in accordance with the servicing procedure under 46 CFR Subpart 160.176.

g. Boats And Davits Not Credited As Lifesaving Equipment. Some vessels by nature of their operation, carry special boats and launching equipment in addition to those required for lifesaving purposes. Survey launches, personnel boats, workboats, and similar craft are not subject to approval as lifesaving equipment, but should be sufficiently seaworthy for the waters in which they will be used. The hull and structural components of such boats should be checked for damage and deterioration. Launching equipment for such craft is often intended only to handle an empty boat, with embarkation and debarkation taking place with the boat in the water. However, if the launching equipment results in personnel being suspended over water on wires, the launching equipment and attachments should be checked by a 10% overload test, similar to that for lifeboat and rescue boat launching appliances. After the test, the boat attachments should be visually checked for cracking and distortion. Appropriate data plates should be installed on both the winch and davit.

h. Hydrostatic Release Units. Check each hydrostatic release unit used in an item of lifesaving equipment, including those used in certain 406 MHz satellite EPIRBs. (See NVIC 4-86 for guidelines on installation of hydrostatic release units for survival craft.)

(1) Conventional Hydrostatic Releases. Conventional hydrostatic releases must be tested annually at an approved facility. Tests
are recorded on an inspection tag attached to the device.

(2) Disposable Hydrostatic Releases. Disposable hydrostatic releases must be marked with their expiration date using the tabs on the label. This must be done when the release is installed. Disposable releases must be replaced when the expiration date passes, normally two years from installation. If multiple dates are indicated, the earliest date is the date of expiration.

(3) Hidden Installations. Some hydrostatic releases, especially those used on certain EPIRBs, can not be readily seen when the equipment is properly installed. If the servicing date or expiration date on an installed hydrostatic release can not be readily seen, a label should be applied in a location where it can easily be seen. The label should indicate that the device uses a hydrostatic release, along with its servicing or expiration date.

(4) Weak Links. An important part of a float-free survival craft installation is the weak link which secures the survival craft painter to the vessel. Different weak link arrangements are used with different hydrostatic releases. The weak link arrangement must agree with the instructions of the hydrostatic release manufacturer, the survival craft manufacturer, or NVIC 1-83 in the case of life floats and buoyant apparatus.

(5) Satellite EPIRBs With Unapproved Releases. The Raytheon/JRC model JQE-2A, Alden SATFIND model 406 M3, and Kannad model 406 F satellite EPIRBs include hydrostatic release mechanisms which were accepted as part of the EPIRBs. They carry no Coast Guard approval information, and must be replaced periodically as indicated in the owners manual and the replacement label on the float-free bracket.

i. Ring Lifebuoys, Life Floats, And Buoyant Apparatus. Check the covers of the ring lifebuoys, life floats, and buoyant apparatus to make sure they are intact and that buoyancy material is not exposed. Check cordage to make sure that it is good condition, and not weakened by weathering. Stowage arrangements should allow these devices to be readily cast loose, or to float free, as required by the regulations. Check painters for life floats and buoyant apparatus with the guidance in NVIC 1-83.

j. Ring Lifebuoy Quick-Release Device. A quick-release device is required for two ring lifebuoys on vessels on international voyages. The lifebuoys must have a floating electric water light and a self-activating smoke signal attached to them.

(1) Procedure. Operate each quick-release device. A self-activating smoke signal is not required for this test if a dummy device of comparable size and weight is used. A lanyard may be used to keep the ring buoy and its accessories from falling to the surface, or hitting the side of the vessel. Activation of the smoke signal, in particular, should be avoided.

(2) Acceptance Criteria. The quick-release device must be able to be operated from the bridge. The ring lifebuoy and its attachments must be properly released and dropped clear of the side of the vessel.

k. Floating Electric Water Lights. Check the number and installation of each floating electric water light on board. Activate each one briefly to confirm that the battery is fresh and properly installed, and that the light is in good operating condition. Shake the light and examine the lens to make sure that no water has leaked or condensed inside. Water lights meeting 46 CFR 161.001 have not been permitted to be installed since December 31, 1971. Those installed before then may continue in service, provided that are in good condition. The original BA-23 military dry-cell batteries for these lights are no longer available. Acceptable replacements, if even still available, are general purpose no. 6 dry-cell batteries.

l. EPIRBs and SARTs.

(1) Test each Emergency Position Indicating Radio Beacon (EPIRB) and each Search and Rescue Radar Transponder (SART), except an EPIRB or SART in an inflatable liferaft. Use the test switch and output indicator to determine that the device is operating properly. The "TEST" switch or switch position can be used at any time, since no signal is transmitted. Avoid using the "ON" position to test an EPIRB. Note that some EPIRBs may have a "TEST/ON" position. These EPIRBs go through a test cycle before beginning to transmit an emergency signal. These EPIRBs should be switched back to the "ARMED" or "READY" position as soon as the test cycle is complete.

(2) Check the battery expiration date. The battery must be replaced if the expiration date has passed. The operator should be alerted to a battery which will soon expire and will need to be replaced.

m. Lifejackets And Work Vests. Refer to NVIC 03-10. Examine each lifejacket and work vest to determine that the proper number are on board, and that each is in serviceable condition and properly marked with the name of the vessel. See NVIC 14-92 if "Extended Size" lifejackets are used. Each lifejacket and work vest not in serviceable condition is either repaired, or destroyed and removed from the vessel. If needed to keep track of devices which have been inspected, the marine inspector may mark or stamp the lifejackets and work vests to indicate that they have been inspected and passed.

[NOTE: Some regulations may indicate that lifejackets will be stamped "passed" once they have been inspected, however, inspectors may regard this as optional unless an operator insists that the stamps be applied.]

(1) Procedure. Check the lifejacket visually to determine its general condition. Check the envelope, tie straps, stitching, and lifting attachments. Give them a mild tug if they show signs of rot or deterioration. Other unsatisfactory conditions are excessive hardness, stiffness, lumpiness, nonresilience, dirtiness, or being oil soaked. A gentle squeeze will detect most of these conditions. In addition, check kapok inserts for water logging and mildew. Excessive compression of inserts is not required, because the natural buoyant properties of the kapok fiber provide the required buoyancy, not air in the sealed bag. Although a sealed vinyl pad covering may provide additional buoyancy, its primary purpose is to protect the kapok fibers from water logging, mildewing, and exposure to contaminants. Therefore, inspectors should not concern themselves with small leaks in kapok inserts, provided the conditions cited above are not evident.

(2) Acceptance Criteria. Rot, deterioration, or any other unsatisfactory condition identified in the preceding paragraph, is cause for rejection. A leaking kapok insert is acceptable unless there is evidence of moisture or oil soaking, since oil and mildew will break down the waxy kapok fibers. Likewise, if the general condition of a lifejacket is poor, its buoyancy is questionable. Representative samples should be subjected to a buoyancy test in accordance with NVIC 2-63. A lifejacket or work vest that fails to meet the required test, and is found unfit for service and beyond repair, should be destroyed in inspector's presence and removed from the vessel. Minor repairs and cleaning should be accomplished in accordance with the manufacturer's instructions, 46 CFR 160.006, or NVIC 2-63.

n. Immersion Suits. Refer to NVIC 03-10. Examine each immersion suit to determine that the proper number are on board, and that each is in serviceable condition and properly marked with the name of the vessel. Immersion suits must have operable waterproof zippers, valves and seams which do not leak, and no unrepaired holes. Maintenance instructions are provided with each approved suit. Each immersion suit not in serviceable condition is either repaired, or destroyed and removed from the vessel. If needed to keep track of devices which have been inspected, the marine inspector may mark or stamp the immersion suits to indicate that they have been inspected and passed.

(1) Overall Inspection. Each suit should be laid out flat, inspected for proper markings, holes, separated seams, missing parts, and other obvious defects. The exterior surface of the suit should not be abraded to the point where foam flotation material is exposed. Removable gloves must be tethered to the sleeves. The suit should be completely dry inside and out.

(2) Zippers. Zippers can corrode if not properly maintained. The manufacturer's recommended zipper lubricant should be used. Paraffin should be avoided, especially in cold climates. The teeth that actually secure the waterproof zipper are the small teeth on the "inside" of the zipper. A little corrosion on these teeth can block the slider, or damage the teeth so the zipper does not operate. If a closed zipper can be separated when probed with a (dull) table knife, the zipper needs to be replaced.

(3) Seams. Immersion suit seams are stress points and are often the source of leaks. Suits should be leak checked periodically, and leaking seams repaired in accordance with the manufacturer's recommended repair procedure. Leak checking is most effectively accomplished by inflating the suit using an appropriate adaptor in the head of the suit. If the suit has foot valves, these need to be held shut for this test. If the suit does not retain air, a detergent solution is used to find the source of leakage. This testing does not need to be conducted at each subsequent inspection for certification, especially if the suits appear in good condition, or if records indicate that the suits have been recently leak checked. If the suits are suspect, the inspector should direct that a leak check be conducted on a selected sample of the suits on board, to determine if there is a problem.

(4) Inflatable Collar. If a suit has an inflatable collar, it must be securely attached to the suit: It should be inflated and allowed to stand overnight. If the collar does not stay firmly inflated overnight, it should be repaired or replaced. Inflation tubes should be complete, securely attached, and not have kinks which would prevent the wearer from inflating the collar.

(5) Foot Valves. Some suits have one-way foot valves intended to allow excess air and water to escape from the suit. Leaking foot valves are a common source of problems. These valves should be observed to be in their normal closed condition during the inspection. They should be free of debris and distortion that would adversely affect their performance.

(6) Stowage. Each suit should be kept in a stowage bag of the type provided by the manufacturer. However, keeping the suit on an appropriate hangar in a protected, but readily accessible location is an acceptable alternative. Stowage bags should be inspected to ensure they are in satisfactory condition for the purpose of containing and protecting suits. The exterior of each bag should be marked with the size and the words "immersion suit" or "exposure suit." Suits should not be stacked more than a few high, or be kept on the bottom of a stack of any other

equipment. Excessive stacking can compress suits at the bottom of the pile, eventually damaging the buoyant insulating foam.

o. Retroreflective Material. Most lifesaving equipment on inspected vessels is now required to be equipped with retroreflective material. This is normally applied by the manufacturer, but may have to be applied by the operator. See NVIC 1-87 and IMO Assembly Resolution A.658(16) for more information on placement of retroreflective material. Retroreflective material that is delaminated, torn, cracked, or discolored must be replaced. Questionable material may be checked for optical performance by examining it with a flashlight. With the flashlight held as close as possible to the observer's eye and pointed at the retroreflective material, the reflective performance of good material will be obvious. Replacement material should generally be positioned in the same place as the old material. Only Coast Guard approved retroreflective material (approval series 164.018) may be used. This material is tested for flexibility, adhesion, and optical performance under cold, wet, and oily conditions. The application directions supplied with the retroreflective material should be carefully followed.

p. Lifejacket Lights. Except for one-use lights, such as chemiluminescent lights (chemical lights) and those with water-activated batteries, turn each light on and off to make sure it operates. The light or the power source must be marked with a date of expiration, unless it is a standard battery such as a 9-volt or D-cell. Unmarked batteries must be replaced annually and must be of the type designated by the light manufacturer. Other batteries or lights must be replaced by their expiration date. Operators of vessels operating in near-freezing waters should be aware that battery and light operation degrades in cold temperatures. In particular, chemiluminescent type lights should be avoided on vessels operating in near-freezing waters.

q. Whistles. Lifejackets and immersion suits on vessels on international voyages must each have a whistle attached to the device with a lanyard. The lanyard must be long enough to allow the whistle to reach the mouth of the wearer. The whistle must be a ball-type or multi-tone whistle of corrosion¬ resistant construction. The lanyard and whistle must both be in good, operable condition.

r. Distress Signals. Depending upon its service, the vessel may be required to carry flares or smoke signals in an appropriate stowage location in or near the pilothouse. Flares and smoke signals must be approved, of the appropriate type required by the vessel regulations in 46 CFR, and not past their expiration date.

s. Line Throwing Appliances. Check each line-throwing appliance to make sure that it has the proper stowage arrangements, and that each dated component has not expired. Each line-throwing appliance must also have the equipment on the list provided with the approved appliance. Make sure that an auxiliary line of the correct size and length is provided, and that it is in good condition. If the logbook shows that a required test

firing is due, witness a test firing - if it can be safely carried out where the inspection takes place.

t. Pilot Ladders And Embarkation-Debarkation Ladders. Though not strictly "lifesaving equipment," pilot ladder inspections are covered here because of their similarity to embarkation-debarkation ladders. Any new pilot ladder on or after 23 July 1984 is required to be approved under approval series 163.003. Rope embarkation-debarkation ladders are approved under approval series 160.117, or are approved as equivalent to chain ladders under approval series 160.017. Rope embarkation¬ - debarkation ladders are similar to approved pilot ladders, except that embarkation-debarkation ladders are not required to have spreader steps. Chain ladders are approved under approval series 160.017. All ladders must be a single length of ladder.

(1) See IMO Assembly Resolution A.1045(27) for information on pilot ladder installation and other pilot transfer arrangements.

(2) Any embarkation-debarkation ladder installed on or after 1 July 1986 on a ship certificated for international voyages, must be a rope ladder. These ladders must extend from the deck to the waterline in the lightest seagoing condition at a 15 degrees adverse list. Any other ladder must be either an approved chain ladder or rope ladder. These ladders must extend from the deck to the waterline in the lightest seagoing condition, with no list assumed.

(3) The embarkation-debarkation ladder must be secured to the deck adequately, and must be ready to be deployed.

(4) Pilot ladders and embarkation-debarkation ladders must have no cracked or broken steps. Each step must be securely attached to the side members. A vessel may use up to two unapproved temporary replacement steps to replace broken or cracked steps. However, temporary steps will not be accepted at inspections for certification. Broken steps must be replaced by permanent approved replacement steps.

(5) Chains and other metal ladder parts must be free of damaging corrosion. Ropes must not be weathered, worn, or greasy. SOLAS 74/83 rope ladders have a safety core of a color which contrasts with the outer cover. If the outer cover is worn through to the core in any place, the ladder must be replaced, or the ladder reroped under original manufacturing conditions. Failure to follow the proper ladder assembly procedure will result in steps which are unevenly spaced and not level.

(6) Approved pilot ladders and embarkation - debarkation ladders are manufactured under carefully controlled conditions, under the inspection of an independent laboratory. This assures that the ladders will be well constructed and suitable for

their intended purpose. Steps are assembled to the ladder at regular intervals in a safe and proper manner. Side ropes are properly straightened and tensioned, so that the steps remain level and safe to use. These ladders, especially pilot ladders, are subject to extremely hard use, and steps will occasionally be damaged. For this reason, replacement steps are also approved. These steps are white or yellow, rather than the orange of the original steps, so that they are readily apparent to anyone inspecting or using the ladder. This conspicuous marking helps draw attention to steps which have not been installed under the same careful conditions as those of the original ladder. Vessels under Coast Guard inspection may not field assemble pilot ladders and embarkation - debarkation ladders. Such ladders will not be considered to be approved, even if assembled from approved replacement steps. The same thing applies to field "reroping" of ladders ¬that is using original orange steps to assemble a ladder with new ropes. Ladders assembled in this fashion can not be assembled with the same care as in the manufacturer's facility. There is no objection to the manufacturer using old steps in good condition to rerope a ladder under original manufacturing conditions, however.

u. Powered Pilot Hoists. Per IMO Resolution MSC.308(88), pilot hoists may not be used on SOLAS ships after July 1, 2012.

v. Abandon-Ship Drill And Fire Drill. Hold an abandon-ship drill and a separate fire drill. When drills can not be held due to adverse weather conditions or other uncontrollable factors, a Form CG-835 may be issued, granting the vessel a reasonable period of time in which to conduct drills to another inspector's satisfaction. However, these drills are one of the few opportunities Coast Guard inspectors have to interact with the entire crew and to let them know of our concern for their safety. Human error is often identified as being responsible for mishaps. Deferring these drills to a later date is strongly discouraged, particularly if there has been a crew change out. There is rarely a need to defer a fire drill; lifeboat drills can be abbreviated if the weather is rough (i.e., lower the boat to the water but do not release or exercise it).

(1) Conduct Of Drills.

(a) Drills shall be carried out in as realistic a manner as possible. The inspector specifies the nature of the emergency to be simulated, including incapacitated officers, crew members, or injured passengers, if appropriate.

(b) There shall be no forewarning of the crew to the extent that fire hoses are led out, pumps started, or lifejackets donned prior to the sounding of the general alarm.

(c) Spot check crew members to make sure they know their stations and are familiar with their duties as contained in the station bill (muster list). The inspector does not direct or instruct personnel at any time during drills; the inspector's duty is only to observe them and note deficiencies.

(d) On-load release mechanisms such as "Rottmer" gear can release the boat whenever the release handle is moved, whether the boat is in the water or not. Persons in command of the boat and operating this mechanism must fully understand the danger of serious injury or death resulting from premature operation.

(2) Fire Drills. Crew members shall demonstrate that they are familiar with fire extinguishers, fixed CO and foam systems, sprinkling systems, hoses and nozzles, steam smothering systems, and all other emergency equipment. Persons in charge shall instruct crew members in the use of the equipment as necessary.

(3) Abandon-Ship Drills. During abandon-ship drills, care must be taken to minimize the hazards associated with the loading and unloading of the boats. Casualties have occurred because adequate safety precautions were neglected or because personnel took needless chances.

(a) When possible, all lifeboats shall be lowered to the water.

(b) Crews of vessels equipped with oar-propelled lifeboats shall be exercised at rowing.

(c) Whenever a lifeboat is being raised, all persons in the boat should be required to disembark before the davit starts to move from its outboard position.

(4) Acceptance Criteria.

(a) Crew members must know their stations and be familiar with their duties as contained in the station bill (muster list).

(b) The officers and crew must demonstrate that the station bill and their emergency procedures can provide for substitution of key personnel, and different emergencies which may require different actions.

(5) Unsatisfactory Results. When a drill is considered unsatisfactory, the inspector shall report the results to the OCMI. The drill should be repeated at reasonable intervals until satisfactory results are obtained. The OCMI shall consider unsatisfactory drills as justification for withdrawing or withholding the COI.

CHAPTER 2: VESSEL REINSPECTIONS, ANNUAL INSPECTIONS, AND PERIODIC INSPECTIONS

A. INTRODUCTION

Vessel reinspections, annual inspections, and periodic inspections occur between those inspections required by vessel inspection laws. These focus more on the vessel's equipment and operating practices, while inspections required by vessel inspection laws focus on basic hull and machinery conditions. The scope of reinspections, annual inspections, and periodic inspections varies according to the vessel's condition, its record of maintenance, and, at times, the marine inspector's time constraints. Such inspections should verify that all parts of the vessel and its equipment are being maintained in a safe condition. They should not be perfunctory; the vessel's operator should not be able to predict their scope.

1. Scope of Reinspections, Annual Inspections, Periodic Inspections

During reinspections, annual inspections, and periodic inspections, inspectors must give special attention to lifesaving and firefighting equipment and watertight closures. The inspector should vary the degree of attention they give to individual items as circumstances require. During each reinspection, annual inspection, and periodic inspection, the inspector should inspect accessible parts of the hull and machinery that are prone to neglect and rapid deterioration. The inspector has great latitude in the scope of these inspections, which is based on his or her evaluation of the vessel's overall condition. At a minimum, the guidelines for International Convention for the Safety of Life at Sea (SOLAS) annual inspections must be used for all vessel reinspections, annual inspections, and periodic inspections (see E of this Chapter).

2. Inspector's Obligations

The inspector must be reasonably satisfied as to the condition of the vessel and its equipment, and must ascertain that the vessel's degree of compliance with statutes, regulations, and the terms of its Certificate of Inspection (COI) warrant continued possession of the COI. As conditions warrant, the inspector may conduct an inspection similar in scope to that of an inspection for certification. In any case, the scope of inspection must be consistent with the requirements found in B2 of this Chapter.

3. Vessel Information Sources

The inspector must use all available evidence when appraising the condition of a vessel and its equipment. This includes the latest inspection findings, records of previous Coast Guard inspections, the opinions or records of other interested surveyors or inspectors, information furnished by the officers and crew, facts concerning the vessel's classification, and previous certification.

NOTE: See 46 U.S.C. 3315 concerning the disclosure of sources of information.

The inspector may seek the advice of experts in a particular field, such as boilermakers, shipfitters, and welders, or the opinion of more experienced inspectors or technical personnel assigned to his or her unit. Based on this evidence and his or her own inspection, the inspector must reach an independent conclusion as to vessel and equipment conditions and act accordingly. The Officer in Charge, Marine Inspection (OCMI) must be consulted when there is doubt in the inspector's mind as to a proper course of action.

---

4. Commandant's Reinspection Policy

The Commandant's policy regarding reinspections, annual inspections, and periodic inspections does not restrict an OCMI from requiring reinspection at any time when the OCMI believes that a vessel's degree of compliance no longer warrants continued possession of a COI. However, the OCMI should not require or encourage arbitrary and unnecessary reinspection.

Minor defects or imperfections that do not in themselves hazard the vessel must not be construed as rendering the vessel unfit for continued operation. Vessel owners must be granted reasonable time to correct deficiencies.

B. REFERENCES

---

1. Statutes

Under 46 U.S.C. 3308, all vessels subject to inspections at frequencies specified by 46 U.S.C. 3307 must be examined at proper times to ensure compliance with statutory and regulatory requirements. Under 46 U.S.C. 3714, tank vessels that carry liquid bulk dangerous cargoes must be examined at least once annually. 43 U.S.C. 1348 requires annual inspection of mobile offshore drilling units (MODUs) operating on the U.S. Outer Continental Shelf (OCS).

---

2. Regulations

46 CFR 2.01-10(b) provides that the Coast Guard, on its own initiative, may examine, inspect, or reinspect vessels subject to certification at any time. The following regulations require reinspections, annual inspections, and periodic inspections of certificated vessels at stated intervals and establish the scope of such inspections.

VESSEL TYPE	CFR CITATION
Tank Vessels	46 CFR 31.10-17
Passenger Vessels	46 CFR 71.30
Cargo and Miscellaneous Vessels	46 CFR 91.27
Small Passenger Vessels	46 CFR 176.500 (Sub T) 46 CFR 115.500 (Sub K)
Oceanographic Research Vessels	46 CFR 189.27

3. SOLAS Survey Requirements

Regulation 6(b), Chapter 1 of the 1978 Safety of Life at Sea (SOLAS) Protocol requires annual surveys of all cargo and tank vessels issued Cargo Ship Safety Construction Certificates (SAFCON) and Cargo Ship Safety Equipment Certificates (SEC). International Maritime Organization (IMO) Resolution A.413(XI), as amended by Resolution A.465(XII), provides an excellent, internationally accepted standard for conducting surveys.

C. REINSPECTIONS OF PASSENGER VESSELS

1. Large Passenger Vessels (46 CFR Subchapters K and H)

Reinspections of passenger vessels holding 1-year COIs (certificated under 46 CFR, Subchapter H or K) must be conducted at the discretion of the OCMI. For such vessels, an examination of safety and operating equipment as well as all accessible parts of the hull and machinery that are most prone to neglect or damage must be carried out to the satisfaction of the inspector. Conditions that in themselves do not hazard the vessel, but indicate generally poor condition, should alert the inspector to broaden the scope of the reinspection (see 46 CFR 71.30 for Subchapter H or 46 CFR 115.500 for Subchapter K).

2. Small Passenger Vessels ("T-Boats")

The scope of annual inspections of small passenger vessels, which hold 5-year COIs under 46 CFR Subchapter T, is described in 46 CFR 176.500 (b). The OCMI must cooperate with vessel owners and operators when scheduling inspections in order to interfere as little as possible with the normal vessel operations. For the inspection of a T-boat with a COI issued in another zone, the OCMI should obtain the vessel's previous inspection records from the certificating OCMI. In such cases, the next OCMI inspecting the vessel should resolve any questions concerning the vessel's structure or equipment with the certificating OCMI before issuing major requirements as a result of the inspection.

NOTE: Steam powered T-boats require special consideration for the inspection of their boilers.

D. ANNUAL INSPECTIONS, PERIODIC INSPECTIONS, AND REINSPECTIONS OF TANK, CARGO, AND MISCELLANEOUS VESSELS

1. Introduction

Each tank, cargo, miscellaneous vessel and MODU holding a 5-year COI is subject to annual and periodic inspections as outlined in the applicable 46 CFR subchapter. If a vessel has SOLAS certificates, the annual and periodic inspections meet the SOLAS mandatory annual survey requirements (See MSM Volume II, Materiel Inspection, COMDTINST M16000.7A (series), Section E). Annual and periodic inspections, must, if possible, be carried out between the 9th and 15th months following the date of issuance of the COI. In addition to this requirement, an annual or periodic inspection should normally coincide with a drydock examination, unless the owner or master requests a deferment.

2. Timing

If a vessel's drydock examination occurs outside the window for an annual or periodic inspection, it will need to have a reinspection. This reinspection's scope should vary depending on the time of the vessel's drydocking relative to the date of the previous or next required inspection. For example, a drydocking that occurs shortly after the inspection for certification should have a reinspection that is very limited in scope. Likewise, a reinspection associated with a drydock that occurs shortly before the expiration of a COI should not duplicate the scope of an inspection for certification, but must be sufficient to ensure safe operation of the vessel.

3. Standards for Annual Inspections, Periodic Inspections, and Reinspections

These types of inspections are normally less detailed than the inspection for certification. However, they must still be sufficient to verify that the vessel's condition and operation remain satisfactory and that the vessel can continue to operate safely. The inspector must inspect all accessible parts of the hull and machinery, especially those prone to rapid deterioration and neglect. The inspector must give particular attention to lifesaving, firefighting and watertight equipment. Equipment and devices for vessel control must be tested and emergency drills held, if practicable.

Annual and periodic inspections required by 46 CFR 91.27, as described in this part of the MSM, are mandatory. The continued validity of a vessel's COI depends on the satisfaction of this requirement. These inspections may be conducted within the United States or at a foreign port or place. When an owner/operator chooses to have the inspection conducted at a foreign port or place, they will be responsible for reimbursement for the inspector's travel and subsistence.

At the 1-year anniversary of the vessel's COI, the certificating OCMI should issue a letter to the vessel's operator advising that the required inspection is due. Annual and periodic inspections are due no later than the 15-month anniversary date of the COI's issuance. If, after the 15-month anniversary date of the COI, the inspection has not commenced, been completed, or been deferred, the owner and operator will be advised that the vessel's COI is suspended under the authority of 46 U.S.C. 3313(b)(4) until the required inspection is completed. This notification will be made by letter and telephone/FAX and an appropriate entry will be made in MISLE and the local vessel file.

Requests for deferment of inspection beyond the 15th month of the COI anniversary date will be closely evaluated by the cognizant OCMI. Examples of situations in which deferments may be granted include rescheduling to make concurrent inspections ("harmonize" inspections) or the unavailability of inspection personnel.

---

4. RIN Alternative Provisions for Offshore Supply Vessels

The RIN Alternative Provisions for Offshore Supply Vessels (OSVs) is an alternative inspection program for OSVs under 400 GT operating overseas. This program allows owners/operators or designated third parties to perform an alternative mid-period examination and submit a report to the cognizant OCMI in lieu of having a marine inspector travel overseas to perform a mid-period reinspection. Liftboats are excluded from the program. The program does not delegate inspection duties to any private party.

a. When aboard any OSV under 400 GT, except liftboats, marine inspectors should be aware that an OCMI may have to determine, at a later date, whether the vessel should be allowed to participate in the program. If the vessel previously participated in the alternative program, the inspector should pay close attention to deficiencies which may have existed before the mid-period, but were not corrected.

b. When deficiencies are reported in the alternative examination report which is accepted in lieu of a Coast Guard mid-period reinspection, they should be entered into MSIS and tracked in the normal manner. The OCMI must establish compliance deadlines for outstanding deficiency items or approve those proposed by the owner/operator. The OCMI may determine the report is so deficient that a Coast Guard mid-period reinspection is required. The owner/operator must be informed, and a time limit for scheduling the mid-period reinspection specified.

E. ADMINISTRATION OF ANNUAL INSPECTIONS, PERIODIC INSPECTIONS, AND REINSPECTIONS

1. Actions by the OCMI

The OCMI must control inspections of all vessels certificated in their zone, insofar as practicable, and ensure that other vessels in their zone are inspected, as appropriate.

NOTE: This does not mean that a vessel certificated in one zone must be inspected there.

The continued validity of a vessel's COI is contingent upon the satisfaction of the annual, periodic and reinspection requirements. For those vessels that are issued a 5-year COI, the following procedures are applicable to ensure compliance with the requirements:

a. Notification. Prior to each anniversary year of the COI, the certificating OCMI should issue a letter to the vessel's owner or operator advising that the required inspection is due. This notification is performed as a matter of courtesy and does not affect the responsibility of the owner/operator to comply with the inspection requirements.

b. Deferments. In the event that an owner/operator requests deferment of the required inspection past the 15th month of the COI's anniversary date, the OCMI will evaluate the request and, if found justified, grant a deferment.

(1) Requests for deferments past the 15th month should be closely evaluated. Failure of an owner/operator to plan and schedule an inspection is not sufficient justification for a deferment.

(2) If a deferment is granted, the owner/operator should be issued a requirement (either a Vessel/Facility Inspection Requirements, Form CG-835 or letter) to complete the inspection within a specified length of time which must not exceed the 17th month of the COI's anniversary date.

NOTE: These actions are applicable to small passenger vessels.

---

2. Actions by Owners, Operators, and Masters

a. The regulations require annual inspections, periodic inspections, and reinspections of certain vessels each year between the 9th and 15th month after the COI's anniversary date (the anniversary of the date the COI was issued). (See Paragraph B2 above for citations.)

(1) It is the responsibility of the owner and operator to arrange for inspection before the end of the 15th month or, when that is not possible, to obtain a deferment from the OCMI. Failure to do so subjects the owner, operator, and others to civil penalty liability.

(2) The OCMI must cooperate, insofar as practicable, with owners and operators to schedule inspections to avoid conflict with vessel operating schedules. Deferment requests that have merit should be granted when the required inspection can be accomplished at a later time provided it is conducted as noted above before expiration of the COI.

(3) Written applications for annual inspections, periodic inspections, and reinspections are not required.

b. Responsibilities. Vessel representatives of tank, cargo, miscellaneous, and inspected oceanographic research vessels must be advised of items that the regulations require to be inspected, serviced, or replaced at certain intervals.

(1) The vessel owner is responsible to ensure that required inspections and tests are held when due (e.g., hydrostatic tests of boilers and inspections of boiler mountings). If they are not held when due, the owner may be subject to a marine violation, civil penalties, and possible revocation of the vessel's COI.

(2) The benefits of conducting these tests and inspections at regular inspection intervals should be obvious to owners. Unexpected changes to a vessel's schedule may compel an owner to depart from this desired practice. In doing so, an owner

does not become immediately liable for a penalty, but incurs the inconvenience of having to be inspected at a later time.

(3) The vessel's representative must be reminded of the responsibility to replace or service vessel equipment at or prior to the due date (see 46 CFR 31.10-18, 97.15-60, and 196.15-60).

F. RECORDS OF ANNUAL INSPECTIONS, PERIODIC INSPECTIONS, AND REINSPECTIONS

1. COI

Annual inspections, periodic inspections, and reinspections must be recorded on the COI in the space provided.

If the vessel has SOLAS certificates, the mandatory annual survey endorsement on the reverse of the SEC and the SAFCON (if issued) must also be completed by the OCMI or an authorized representative.

2. Vessel Inspection Record, Form CG-2832

An entry noting the type of inspection completed must be made on Vessel Inspection Record, Form CG-2832, which is kept in the vessel's pilothouse.

3. Inspection Book Series, Form CG-840

The inspector must record all reinspections in the appropriate Inspection Book Series, Form CG-840. When a reinspection is of lesser scope (e.g., correcting specific discrepancies), the inspector may use a local examination form developed by the OCMI to note the circumstances of the reinspection for local office records. When reinspection of a tank, cargo, miscellaneous, or oceanographic research vessel is performed in conjunction with a drydocking, but is not of the scope of a mid-period reinspection, it may be recorded in booklet Inspection Book, Form CG-840, at the OCMI's discretion. The entry "Limited reinspection indicates satisfactory condition" will serve the purpose in such cases.

4. Marine Information for Safety and Law Enforcement (MISLE) Entries

Units must make appropriate entries for all annual inspections, periodic inspections, and reinspections.

G. CRITICAL AREAS INSPECTION PLAN (CAIP) SURVEYS

General Surveys required as a part of a vessel's CAIP must be conducted as outlined in NVIC 15-91, NVIC 15-91, Change 1 and MSM II, Materiel Inspection, COMDTINST M16000.7A (series), Chapters A5 and B4.

CHAPTER 3: HULL EXAMINATIONS

A. HULL EXAMINATIONS

1. Introduction

The final rule implementing the revised drydock and tailshaft regulations established three separate, required examinations of a vessel's hull; Drydock Examination (DE), Internal Structural Examination (ISE), and Cargo Tank Internal Examination (CTIE). (*Federal Register*, Vol. 53, August 24, 1988.)

These exams replace the all-inclusive examination previously referred to as a "drydock" exam. The definition, scope, and interval of each exam are specified in the applicable sections of 46 CFR.

NOTE: The revised drydock and tailshaft regulations do not apply to 46 CFR Subchapter T and Subchapter IA vessels.

NOTE: Credit for the exam must be given on the date that all the requirements of the exam are met, not on the date the exam began.

2. Hull Exam Intervals

For the majority of oceangoing vessels, the intervals for all DE, ISE, and CTIE examinations are the same, i.e., twice within any 5-year period with no more than 3 years between any two exams. For most other vessels, all three exams will coincide several times during the life of the vessel, affording Coast Guard marine inspectors the opportunity to conduct a complete assessment of the vessel's hull structure.

The three distinct examinations also allow the Coast Guard to account for the additional levels of safety inherent in specific vessel designs, such as a double hull tank barge with internally framed cargo tanks in fresh water service. These vessels have a 10-year DE interval and 5-year CTIE and ISE intervals.

3. Concurrent Hull Examinations

Hull examination intervals, particularly those that fall between year 2 and year 3 of a 5-year interval, should result in these examinations coinciding with an inspection for certification, annual inspection, periodic inspection, reinspection, or, in the case of tailshafts, a DE. This is ideal but not mandatory.

If a vessel owner elects to conduct any of the hull examinations early, then he or she should be advised that any other hull examination due at the same time should also be conducted early.

The owner or master may, if operational commitments do not permit all hull examinations being completed together, decide to schedule an exam at a later date, provided that the exam is accomplished within the maximum time interval allowed by the regulations.

---

4. Extension of Hull Exams

a. Extensions of hull examinations. Hull examinations must be conducted in accordance with the applicable regulations, except in instances where extensions are authorized.

(1) A vessel owner or operator must submit any request for an extension of a hull exam to the cognizant OCMI.

(2) To avoid unwarranted extension requests, OCMIs should ensure that owners and operators are aware that Commandant (CG-CVC) only grants DE extensions in the most unusual circumstances. Examples of unusual circumstances are the sudden unavailability of drydock space (e.g., due to high river stage, weather damage to facilities, or of the scheduled drydock facility going out of business), the employment of the vessel where it cannot be replaced without risk, or circumstances clearly beyond the owner's control. Financial hardship alone is not a valid reason for granting a drydock extension.

b. Action following receipt of an extension request. Upon receipt of a request for extension of any hull examination, the OCMI should ascertain the condition of the vessel in question. A visit to the vessel is necessary in all but the most unusual circumstances.

(1) Prior to this visit, the inspector should query MISLE for any information on the vessel and pay special attention to any outstanding requirements or casualty information that is available.

(2) While aboard the vessel, the inspector should interview the chief engineer and/or the master, as appropriate depending upon the class of vessel, to obtain their opinions on the condition of the vessel's hull, tailshaft(s), and associated machinery. In addition, the inspector must obtain a written statement from the chief engineer, master, or both, attesting that the vessel is in suitable condition for operation during the period of extension requested.

(3) The inspector should then examine the vessel to the extent necessary to ensure that the condition of the vessel is, in his or her opinion, satisfactory for the extension requested and does not contradict the opinion of the master or chief engineer. The inspector should also examine the vessel's bridge record card, if applicable, for any deficiencies that may have been issued recently by another port and not yet entered into MISLE.

NOTE: The requirement for a written statement is in addition to the owner's written request for DE extension.

c. Additional considerations for extension. A request for an extension of a hull exam must include an inspection of the vessel and also take into consideration other U.S., international, and class requirements. Any conflicts with other requirements must be resolved before an extension request is forwarded to Commandant (CG-CVC) or granted by the OCMI per Subparagraph A.4.d of this Chapter.

(1) International Convention for the Safety of Life at Sea (SOLAS). SOLAS requires an examination of the outside of a ship's bottom every 12 months on passenger vessels and at intervals not to exceed 5 years on all tankers. In addition, SOLAS requires that tankships 10 years of age and older undergo an examination of the outside of the ship’s bottom at the required intermediate survey, which may take place between 6 months before and 6 months after the midpoint of the period of validity of the Cargo Ship Safety Construction Certificate. A Cargo Ship Safety Construction Certificate must not be extended beyond 5 years.

(2) Load Line Regulations (46 CFR Part 42). The Load Line regulations require a vessel to be drydocked before issuance of a new Load Line Certificate and then every 5 years thereafter. An existing Load Line Certificate may be extended up to 150 days maximum, except for those vessels with Great Lakes Load Line Certificates, which can be extended for up to 365 days. (Until MSM Volume IV, Technical, COMDTINST M16000.9 (series) is updated; see MSM Volume II, Mechanical Inspection, COMDTINST M16000.7A (series), Chapter E4 for policy on load line extensions.)

(3) Tailshaft examination. The tailshaft examination requirements of 46 CFR 61.20-17 through 61.20-23 and D of this chapter provide regulatory and policy guidance on tailshaft examinations. A tailshaft examination extension may also require consideration if a drydock examination extension will delay the tailshaft exam.

d. Delegation of extension authority. The Commandant has delegated limited authority to extend hull examination intervals for certain specific vessels to OCMIs and district commanders, as follows:

(1) Tank barges, not gas freed and not in service. Under current industry needs, a large number of not gas-freed tank barges with current COIs have been laid-up for indefinite periods of time. The OCMI is authorized to grant consecutive 12-month extensions of hull examinations for laid-up tank barges, not to exceed a total of 4 years from the original drydock due date. Each extension must be subject to the following:

(a) The barge must maintain a valid COI, including annual and periodic inspections.

(b) In addition to meeting the requirements of 46 CFR 35.05-15, the barge must be boarded and checked for damage and/or cargo tank integrity at least once a week by an owner's representative.

(c) A Vessel/Facility Inspection Requirements, Form CG-835 must be issued requiring the barge to undergo all required hull examinations prior to being placed in service, with an expiration date to coincide with the expiration date of the COI.

(d) At the end of the fourth lay-up extension, the barge must undergo all required hull examinations and associated repairs made, or its COI must be surrendered.

NOTE: The barge must be gas free prior to the surrender of the COI.

(2) Extension of the CTIE (gravity tanks only) and ISE.

(a) At the vessel owner's request, OCMIs may grant two 12-month extensions to all vessels that require these exams to effect coincidence with a regularly scheduled DE.

[1] In most cases, 24 months should be a sufficient period of time to attain alignment. If a gap of more than 24 months exists between the next CTIE, ISE, and DE due dates, then an effort should be made to conduct either the CTIE or the ISE, or both, early to align them with the DE interval.

[2] Prior to granting an extension, an external exam should be made of the barge, including an exam from topside of all wing voids and rakes. This exam should be of sufficient scope that the OCMI is satisfied that the CTIE and ISE can be delayed for 12 months.

(b) Once harmonization of the DE, CTIE, and ISE intervals is achieved, further extensions of the CTIE and ISE longer than 3 months should not be necessary and should not be considered, except in those cases where unusual circumstances exist, e.g., those beyond the control of the owner.

(c) When an exam is completed following a 3-month extension, the examination completion/credit date must be back-dated to its original due date in order to keep future hull exams in phase with the DE interval.

(3) For vessels subject to 46 CFR Part 151 with gravity tanks carrying those products with a "G" in the last column of 46 CFR Table 151.05, the cargo tank internal inspection intervals in 46 CFR 151.04-5(b)(1) and (2) and the cargo tank external inspection interval in 46 CFR 151.04-5(c) may be extended as follows:

(a) The 2-year cargo tank internal inspection interval for single hull barges and internally framed gravity tanks on double hull barges in 46 CFR 151.04-5(b)(1), and the 4-year cargo tank internal inspection interval for externally framed gravity tanks in 46 CFR 151.04-5(b)(2), may be extended to coincide with the appropriate CTIE interval specified in the tables in the applicable 46 CFR Paragraphs; 46 CFR 31.10-21(a), 31.10-21(b), 91.40-3(a), and Table 91.40-3(b), as appropriate.

(b) The 2-year cargo tank external inspection interval in 46 CFR 151.04-5(c) (applicable to single hull, internally and externally framed double hull tank barges, and single hull barges with independent tanks) may be extended to coincide with the appropriate ISE interval specified in the tables in the applicable 46 CFR Paragraphs; 46 CFR 31.10-21(a), 31.10-21(b), 91.40-3(a), and Table 91.40-3(b).

(c) The guidance in Subparagraph A.4.d(2) above is also applicable to these tanks carrying "G" products.

NOTE: This cargo tank internal and external exam extension authority is only applicable to those products carried in gravity tanks for which 46 CFR Table 151.05 refers to 46 CFR 151.04-5(b) for CTIE intervals (those products carried in gravity tanks with a "G" in the last column of 46 CFR Table 151.05).

(4) Externally framed cargo tanks on double hull tank barges. OCMIs are provisionally authorized to extend the CTIE intervals from 5 to 10 years on double hull barges that are externally framed with the exception of the deck (see the definition for externally framed cargo tanks in Subparagraph B.6.d.(2) of this Chapter). OCMIs must report to Commandant (CG-CVC) any significant findings regarding under deck framing in both externally framed tanks examined at the 10-year interval, when authorized, and internally framed tanks examined at the 5-year interval.

(5) Fuel oil tank examinations. Fuel oil tank examinations are required at 5-year intervals during an ISE. If an ISE extension is granted per subparagraph A.4.d(2) above, the fuel oil tank exam should likewise be extended.

(6) Small passenger vessels. OCMIs may grant DE extensions for T-Boats for a period up to a maximum of 1 year once applicable procedures under subparagraph MSM Volume II, Material Inspection, COMDTINST M16000.7A (series), B3.A.4.b above have been met.

(7) DE extensions for mobile offshore drilling units (MODUs).

(a) Upon completion of the procedures in subparagraph A.4.b above, OCMIs may grant DE extensions for a period of up to 6 months, and district commanders may grant a second 6-month extension. The maximum period of time that a DE interval may be extended is 12 months.

(b) MODUS in layup. District Commanders may grant extensions of exam intervals beyond 3 years for laid-up MODUs, provided that the MODU maintains a current COI and its owner or operator submits a letter attesting to the MODU's safe condition.

[1] A Vessel/Facility Inspection Requirements, Form CG-835 should be issued to extend the DE and/or special underwater intervals until the MODU either returns to service or the COI expires. In no case should the expiration of the Vessel/Facility Inspection Requirements, Form CG-835 be beyond the expiration of the COI.

[2] A deficiency letter must be sent to the vessel owner to require completion of the appropriate exam prior to the vessel returning to service or renewing the COI, whichever occurs first.

(8) Great Lakes vessels. The Commander, Ninth Coast Guard District, is authorized to grant DE extensions for Great Lakes vessels under the following guidelines:

(a) Extensions must not exceed 365 days.

(b) Extensions should be considered on a ship-by-ship basis and will be based on the results of a non-credit ISE, the extent of which should be to the satisfaction of the Commander, Ninth Coast Guard District.

(c) The Great Lakes load line assignment authority has been notified and there are no outstanding conditions that would impact the decision for the extension.

(9) Inland passenger vessel special drydock extension criteria. Drydock extensions of up to 30 months are available to inland passenger vessels that operate on restricted
routes in a benign environment. Such extensions require the vessel to successfully complete a special drydock extension survey. The survey criteria outlined below is similar to the traditional underwater survey program presented in Navigation and Vessel Inspection Circular (NVIC) 1-89 with the exception that it is more detailed and comprehensive.

(a) Eligibility criteria.

[1] Any passenger vessel (inspected under 46 CFR Subchapter H, K, or T) that requests a drydock extension beyond 1 year must meet the following criteria:

aa. The vessel must be constructed of steel or aluminum. Wood and FRP hulls are excluded from eligibility.

bb. The vessel must have operated exclusively in fresh water since its last drydock examination. (To further clarify, this means year-round operation in fresh water.)

cc. Vessel operation must be restricted to rivers or protected lakes. This restriction must be indicated on the vessel's COI. The definition of a protected lake will be left to OCMI discretion.

dd. The vessel must operate exclusively in shallow water or within 0.5 nm from shore. For shallow water operation, the maximum water depth may be defined as the depth at which, if the vessel sinks, the uppermost deck(s) that could safely accommodate all passengers and crew remains above water. To make this determination, vessel stability (passenger heeling moment) must be considered.

NOTE: Water clarity is not included as a condition of eligibility. If water clarity is a problem, then the use of a clear box of at least 18 inches in diameter must be used for the underwater video.

[2] The cognizant OCMI will determine eligibility for drydock extensions. In addition to the above criteria, decisions of acceptability will be based on the following:

aa. The overall condition of the vessel (based on inspection history) and the hull protection system (cathodic protection is required, as a minimum).

bb. The vessel's history of casualties involving the hull and other hull-related deficiencies.

cc. Review of the written extension request.

NOTE: Although a vessel age limitation has not been included as a criterion, the OCMI must consider the impact of vessel age on the overall condition of the hull when determining vessel eligibility.

[3] Unlike the traditional underwater survey program, a pre-survey drydocking is not required. Permanent hull markings, hinged sea chest grates, and reference videos are optional.

(b) Drydock extension applications. The information required for the drydock extension application is identical to the requirements for the traditional underwater survey program (see Section 2 of End. (1) to NVIC 1-89), with the following exceptions:

[1] Hull maintenance and condition assessment program. The extension request must include a hull maintenance and condition assessment program which must, as a minimum, contain the following:

aa. A preventative maintenance plan for the vessel's hull and related systems/equipment. A preventative maintenance plan should consider the following:

(i) Inspection and replacement (as needed) of zinc anodes.

(ii) Inspection and cleaning (as needed) of the underwater hull.

(iii) Inspection and maintenance of rudder and shaft seals.

(iv) Inspection and operational testing of sea valves.

(v) Flushing of sea chests and sea strainers.

bb. Provisions for an annual condition assessment of the hull in the presence of a third party examiner.

(i) The third party examiner should be a qualified marine surveyor (recognized by a national marine surveyor association) or have prior experience as a Coast Guard marine inspector or classification society surveyor. As a minimum, the third-party examiner should have at least 3 years experience in the examination of steel or aluminum-hulled vessels.

(ii) The OCMI has the discretionary authority to accept or deny the use of a particular third party examiner and may, as an option, require the presence of a marine inspector. The condition assessment plan should include the following:

(aa) Evaluation of the vessel's underwater hull and appurtenances (using qualified divers and appropriate video equipment). This is primarily to verify that hull coatings remain intact and check for fouling of hull appurtenances. This can also be used as an opportunity for preventative maintenance.

(bb) Hull gaugings (representative sampling) of suspect areas.

(cc) A mechanism for providing a written hull assessment and preventative maintenance report or checklist to the cognizant OCMI on an annual basis.

[2] Internal structural examination. A thorough ISE must be conducted during the survey. All internal spaces must be made accessible for examination and gas-freed as appropriate. However, integral fuel oil tanks must be

examined as required by 46 CFR 71.53, 115.610, or 176.610 (as applicable).

[3] Vessels of 15 years of age or older. Vessels 15 years of age or older are eligible for drydock extensions under this policy.

(c) Preparatory meeting. Before conducting the drydock extension survey, a preparatory meeting must be held. See Section 4 of Encl. (1) to NVIC 1-89 for details.

(d) Survey criteria. The drydock extension survey must be conducted in accordance with Section 5 of End (1) to NVIC 1-89, with the following additions or modifications:

[1] Duration of the drydock extension survey. The survey should take as long as the inspector considers necessary to ensure that the ship is in a safe condition to continue operation for the next 30 months. At least 5 days should be allowed to conduct the examination. However, with use of a third party examiner, the marine inspector's time on-site may be reduced. With the exception of those portions of the survey that require marine inspector presence, the duration and scope of participation by a marine inspector must be subject to OCMI discretion.

[2] Site selection. The site must be in an area with sufficient water depth under the keel and sufficient clearance adjacent to both sides of the vessel to allow the diver to safely survey the entire underwater hull of the ship. Current velocity must be minimal to ensure diver safety. If air temperatures are below freezing, dive equipment must be designed for use in sub-freezing conditions. Diving should not take place when ice exists on the water surface.

NOTE: Water clarity is not a great concern because use of a "clear box" will enable a clear, albeit limited, view of the hull regardless of water conditions.

[3] Hull markings. If permanent hull markings required by NVIC 1-89 are not in place, a temporary underwater grid system must be used. The temporary grid system must consist of stainless or galvanized steel cables, spaced not more than 10 feet apart, with sequentially numbered tags spaced at 1-foot intervals. The grid system must remain in place during the entire survey.

[4] Preliminary examination. Prior to holding the preparatory meeting as noted in Section 3 of NVIC 01-89, a third-party examiner (acceptable to the OCMI) together with qualified divers must conduct a preliminary

examination of the hull. The preliminary examination must be used to assess the overall condition of the vessel hull and identify specific concerns that should be addressed. A marine inspector does not need to be present during this portion of the survey process.

[5] Underwater inspection. A complete underwater hull examination (as defined below) must be supervised by the third-party examiner and recorded on videotape. The third-party examiner will identify areas requiring further examination by a marine inspector. The videotape will be indexed to enable the marine inspector to readily identify and review important sections of the tape.

aa. As a minimum, the underwater survey must include a general examination of the hull plating and a detailed examination of all hull welds, propeller, rudder, other hull appurtenances, sea chests, and sea valves. As a guide, examination of the hull plating should cover all welds and at least five points on each plate, evenly spaced, where ultrasonic gaugings will be taken. The plugging of sea chests and gauging of rudder and tailshaft bearings must also be recorded on videotape. The attending marine inspector may require a detailed examination of other areas of the hull as deemed necessary.

bb. In addition to the above gaugings, divers must take belt gaugings at the bow, stern, and midships and along the wind and water strake. The number and exact location of belt gaugings will be subject to OCMI discretion.

cc. A Coast Guard marine inspector must be present during critical portions of the underwater survey process. Critical portions include, as a minimum:

(i) Examination of critical welds (identified at preparatory meeting), propeller, rudder, other hull appurtenances, sea chests, and sea valves.

(ii) Plugging sea chests and removal of sea valves.

(iii) Gauging of rudder and tailshaft bearings.

(iv) Any other portions identified by the OCMI.

dd. Sea valves must be removed and examined in accordance with the guidance in NVIC 1-89. The OCMI must be completely satisfied that

sea valves can be removed safely. Passengers must be removed from the vessel during this evolution.

ee. This special drydock extension program is an option that the vessel's owner/operator has elected to use. Responsibility for the management of the vessel, its personnel, and maintenance of necessary safety and service systems remains at all times with the master and owner/operator.

ff. The vessel owner must provide the OCMI with a detailed examination report, including a gauging report, bearing clearances, and a copy of the videotape.

[6] Underwater inspection techniques and equipment. Underwater inspection techniques and equipment must be in accordance with Section 5 of Encl. (1) to NVIC 1-89. If water visibility will affect the quality of the underwater video, the video camera must incorporate use of a "clear box."

aa. A clear box is a device which uses clean, fresh water to displace the surrounding water and provide a clear view for the camera. In order to provide an adequate field of view, the clear box must measure at least 18 inches in diameter (or, if rectangular, at least 18 inches in height and width).

bb. As a general rule, modern video and audio equipment must be used to assure the best quality results.

[7] Internal Structural Examination (ISE) and integral fuel oil tank examination. A complete ISE must be conducted as part of the drydock extension survey. All internal areas of the hull must be accessible for examination.

aa. The marine inspector must conduct the entire ISE. The third-party examiner or a suitable representative will accompany the inspector to take additional hull gaugings. The extent of internal gaugings should be limited to that necessary to confirm the information gathered during the underwater survey.

bb. Integral fuel oil tanks must be examined as required by B.5 of this Chapter and 46 CFR 71.53, 115.610, or 176.610 (as applicable).

[8] Acceptable underwater repairs. The acceptance of underwater repair proposals and the actual repairs is subject to OCMI discretion.

aa. Repairs using underwater welding must be subject to periodic reevaluation at subsequent inspections. Such repairs must be completed in accordance with the standards found in the American Welding Society's "Specifications for Underwater Welding."

bb. The OCMI may require immediate drydocking of the vessel if an underwater repair proposal or the actual repairs are considered unsatisfactory.

[9] Evaluating results of the survey. The OCMI may require drydocking of the vessel at any time if not satisfied with the results of the drydock extension survey.

[10] Administrative procedure. If fully satisfied with results of the survey, the attending marine inspector may recommend a drydock extension of up to 30 months.

aa. The drydock extension policy in A.4 of this Chapter must be followed for administrative purposes. Based on results of the survey, the OCMI may recommend a drydock extension of up to 30 months.

bb. Each completed application and survey, with the OCMI's recommendation, must be forwarded to Commandant (CG-CVC), via District, for action. Commandant (CG-CVC) has final approval authority for drydock extensions submitted in accordance with this policy.

[11] Tank vessels, tank barges, and freight vessels. District Commanders may grant DE interval extensions for these vessels under the following guidelines:

aa. The extension period must not exceed 3 months. DE extensions beyond 3 months may only be granted by Commandant (CG-CVC). Requests for all extensions must be forwarded with recommendations to the appropriate office, via the chain of command.

bb. In all cases where an extension is granted (except for Great Lakes vessels), the extension date will be the new drydock base date. That date will be back dated to the actual DE due date.

cc. In all cases (except for DE extensions for 30 days or less), the OCMI will conduct a pre-drydock extension examination to determine the material condition of the vessels. OCMI recommendations concerning the DE extension requests must be forwarded with the DE extension request for further consideration.

[12] Guidance for drydock examination interval extensions. The revised drydock regulations require that certain vessels in salt water service be examined on drydock twice within any 5 year period, with no more than 3 years between any two examinations. This requirement prevents a vessel from ending a 5-year drydock period with a 3-year interval between dockings and beginning the next period with another 3-year interval.

[13] Extensions of drydock examination intervals. Extensions to drydock examination intervals will not normally be considered, except under unusual circumstances. Examples of unusual circumstances are the sudden unavailability of drydock space (e.g., due to high river stage, weather damage to facilities, or the scheduled drydock facility unexpectedly going out of business), the employment of the vessel where it cannot be replace without risk, or circumstances clearly beyond the owner's control. Singularly, financial hardship is not a valid reason for granting a drydock extension. Requests for drydock examination interval extensions forwarded to Commandant (CG-CVC) should be sent via the chain of command with endorsements that provide recommendations. The recommendations made by the OCMI and the District (p) officer are necessary to properly evaluate the request. Every effort should be made by the OCMI to ascertain and indicate the material condition of the vessel in question.

e. Administering extensions. If an extension is granted, it should extend the affected exam to no later than the date to which the extension was requested, or shorter if necessary to meet other requirements discussed above. MISLE must be updated accordingly to reflect the extension dates. If the OCMI deems it appropriate, the COI should be reissued with a statement under "Conditions of Operations" reflecting that hull exams have been extended.

---

5. Documenting Freshwater Service

a. The OCMI should require whatever documentation considered necessary to ensure that only vessels that qualify for a fresh water DE exam interval receive one. Upon acceptance of satisfactory documentation of fresh water service, the OCMI should allow a longer DE interval as provided by the regulations for fresh water service and amend the COI accordingly. The vessel's service should be evaluated annually for extensions up to the standard intervals allowed for fresh water service.

b. OCMIs may add a "Fresh Water Only" restriction to a Lakes, Bays, and Sounds route endorsement as an alternative to requiring letters that document fresh water service. These route restrictions should be made only at the request of the vessel owner. Due to the length and detail of modern COIs, lengthy route endorsements or restrictions to limit salt water exposure are discouraged.

---

6. Impact of Lay-Up on Hull Examination Schedules

The following apply to vessels with a 2.5-year DE interval that are drydocked when they come out of a lay-up period:

a. A vessel for which the lay-up period exceeds 6 months is subject to the following criteria if more than 2 years have elapsed since its last drydocking:

(1) The hull exam cycle when coming out of lay-up will start anew with the re-activation hull exams. The next hull exam will be required between 2 and 3 years after the activation DE, the actual date being the owner/operator's choice.

(2) All hull examinations, i.e., DE, ISE, CTIE, underwater survey (if approved by the OCMI and applicable), and tailshaft exam, are included.

b. For a vessel coming out of a lay-up period of less than 6 months, when more than 3 years have elapsed since the last drydocking, the next required drydocking need not be less than 2 years.

c. Vessels coming out of lay-up periods of any length, but for which less than 3 years have elapsed since the last DE, must be subject to the normal 2.5-year hull exam intervals.

B. CONDUCT OF HULL EXAMINATIONS

Vessel owners or operators are responsible for preparing the hull, through-hull fittings, shaft(s), propeller(s), rudder, tanks, voids, and other confined spaces, as appropriate, for any hull examination. This includes cleaning, disassembling, gas freeing, testing for toxicity, and ventilating.

The inspector should normally conduct the examinations in the company of a vessel representative (port engineer, ship's officer, etc.), as well as any other interested parties or agencies (a classification society surveyor, an insurance underwriter, a shipyard representative, etc.). Whether accomplished in one visit or over a period of time, each particular exam should consist of a careful inspection of all accessible parts of the vessel's structure, fittings, and appurtenances, as appropriate.

The inspector should call deficiencies to the attention of the owner's representative at once. When deemed necessary, the inspector should note requirements for correction of deficiencies on Vessel/Facility Inspection Requirements, Form CG-835. Discussion of the vessel's condition and alternate methods of repair should result in adequate repairs with the least disagreement over methods and extent of repair.

The marine inspector must be satisfied that the vessel can operate safely. In cases of severe damage, controversy, or unusual circumstances beyond the inspector's experience, the OCMI should be notified immediately.

1. References

NVIC 7-68, "Notes on Inspection and Repair of Steel Hulls," contains guidance on judging the condition of and making repairs to steel hulls.

NVIC 7-95, "Guidance on Inspection, Repair and Maintenance of Wooden Hulls" contains guidance on repair of wooden hulls.

Inspectors must be familiar with the recommended procedures in these NVICs.

MSM Volume II, Material Inspection, COMDTINST M16000.7A (series), Chapter A5 contains inspection and repair standards for tank barges.

MSM Volume I, Administration and Management, COMDTINST M16000.6 (series), Chapter 10, contains Coast Guard occupational safety and health policy for marine safety personnel.

NVIC 5-82, "Fixed Ballast," contains guidance on permanent ballast tanks, corrosion inhibitors, test plates and ballast mediums.

---

2. Drydocking Exam for Credit

All vessels in drydock must be cleaned and their fittings opened to the extent necessary for the inspector to determine the condition of the underwater body and fittings. Past casualties have indicated a need to examine fittings in the underside hull that might be hidden by keel blocks. When it is known that docking plugs are fitted in the hull, the inspector should ensure that they are also inspected when the vessel is in drydock.

a. Drydocking in excess of requirements. When a vessel is drydocked for repairs to the underwater body or fittings, or for other purposes in excess of the requirements for complete periodic inspections, an examination should normally be made by an inspector.

   (1) This examination should be sufficient to determine that all repairs are adequate and that the vessel is safe for continued operation. If the owner or operator requests credit for a drydocking after the vessel has already been hauled out, a complete examination for credit should be conducted if the OCMI has the resources available to dedicate an inspector to the job.

   (2) If the drydocking is not for full credit, the inspector should examine the underwater hull structure and fittings to the fullest extent practicable under the circumstances. In such cases, the degree of preparation and opening of fittings may be less in scope. This policy does not prevent the inspector from conducting such reasonable inspections or requiring reasonable cleaning or opening of fittings, as deemed necessary to determine that the vessel's condition is safe for continued operation. However, excessive or arbitrary requirements for the cleaning or opening of fittings are not desired.

b. Drydocking of T-Boats. For vessels inspected under 46 CFR Subchapter T, an inspector need not attend every drydocking that is not for full credit. An inspector must attend each of the periodic drydockings required by 46 CFR 176.600.

---

3. Internal Structural Exam (ISE)

The ISE requirement is in addition to the statutory requirement to determine the suitability of the hull structure at the time of a vessel's COI, as required per 46 U.S.C. 3305 and 3307.

The scope of an examination of the vessel's structure during an inspection for certification that does not include a DE is left to the discretion of the OCMI. The OCMI should use the results of the more recent ISEs when assessing the suitability of the structure for the intended service at the time of certification. This concept is not new and has essentially been applied anytime a COI was issued as the result of an inspection that did not include a drydocking.

---

4. Cargo Tank Internal Exam (CTIE)

The scope of the CTIE exam consists of an examination of the internals of all cargo tanks, including, but not limited to, framing, piping, sounding devices, closure devices, and all attached appurtenances. This exam does not extend to pressure vessel type cargo tanks, which are being addressed in a separate regulatory project.

---

5. Internal Examination of Integral Fuel Oil Tanks

In order to promote safety and to comply with the recommendations of the National Transportation Safety Board resulting from the sinking of the GLOMAR JAVA SEA, the internal examination of integral fuel oil tanks is now required.

a. Timing. The fuel oil tank examination intervals are structured to permit alignment with the similar load line requirements (46 CFR 42.09-15) and the ABS special survey standards (e.g., our regulations require ABS third special survey standards to be met by vessels 10 years of age or more but less than 15 years of age). This 5-year window, and other similar windows, will enable vessel owners to schedule fuel tank examinations as required with the vessel's ISE, or to coincide with the DE, if desired.

b. Selection of tanks to be internally examined. As with the ABS Rules, the mandatory internal inspection of a representative sampling of fuel oil tanks only applies to double bottom tanks. Integral non-double bottom fuel oil tanks do not need to be cleaned out and internally examined if the marine inspector is able to determine by external examination that the general condition of the tanks is satisfactory. When selecting those tanks to be internally examined, due consideration should be given to the results of the external fuel oil tank examination as well as previous inspection records to ensure that, as appropriate, a variety of tanks are entered during the life of a vessel.

---

6. Examination of Tank Vessels

a. Introduction. Coast Guard inspectors focus their attention on certain unsatisfactory conditions found on tankships as a result of casualties, information furnished through crew complaints, and individual examinations of vessels by headquarters representatives. These include the following:

(1) Deteriorated underdeck and side shell longitudinals.

(2) Fractures in bottom transverses, bilge brackets, and web frames, particularly in areas where stress raisers are found, i.e., "notches" caused by rat holes, lap joints, square cutouts, and improperly radiused transitions.

(3) Severe general wastage of internals in tanks or compartments exclusively used for ballast or as cofferdams.

(4) General wastage by corrosion of deck piping, expansion trunks, and pipe brackets.

(5) General wastage and severe binding of the required remote control reach rods.

(6) Deterioration of through hull fittings, spool pieces, and expansion joints.

b. Hull examinations. The findings noted above, coupled with observations of the overall condition of several older tankers, indicate that the scope and caliber of inspections have occasionally been unsatisfactory. To ensure complete coverage of a vessel of any age during an inspection cycle, the scope of DEs, ISEs, CTIEs, underwater surveys, integral fuel oil tank examinations, inspections for certification, annual and periodic inspections should be recorded as follows:

(1) The inspector should sign the "Remarks" section of Inspection Books, CG-840, after indicating each internal compartment that was not examined and why.

(2) Signed entries should be made on Vessel Inspection Record, Form CG-2832, indicating each internal compartment that was examined.

NOTE: Inspections of double bottom and other tanks and cofferdams should be carried out during internal structural examinations, although such spaces may be inspected during an inspection for certification, annual inspection, periodic inspection, or drydocking. In all cases, all gas-free compartments of ocean and coastwise tankships (with the exception of fresh water tanks) should be examined internally at vessel DEs, underwater surveys (if approved and applicable), ISEs, CTIs, integral fuel oil tank examinations, inspections for certification, annual and periodic inspections. If, at the time of an inspection, the OCMI is not satisfied that these compartments were examined during the previous inspection, an appropriate gas-freeing requirement should be made to permit such examination.

c. OCMIs should consult MISLE or contact one another to obtain appropriate records to ensure that internal compartments are examined as required.

d. In addition, the OCMI should take such steps as considered necessary to ensure that thorough examinations are made to detect the conditions described in subparagraph B.6.a above. Particular care should be taken to examine all structural members and areas subject to wastage by corrosion from cargoes or salt water.

e. Examination of vessels built with reduced scantlings.

(1) Very Large Crude Carriers (VLCCs) and Ultra Large Crude Carriers (ULCCs) present a unique inspection problem due to their size, lighter construction, and susceptibility to corrosion.

(a) Experience has shown that vessel age is a much more important factor for inspection of VLCCs than for conventional tankers. Vessels built to reduced scantling standards should be indicated by a special notation on their COI. These vessels have less corrosion allowance and are required to have tank coatings as a condition of construction. The proper use of thickness gauge readings and inspections of tank coatings and corrosion control systems are therefore very important.

(b) Accelerated corrosion loss has been prevalent in cargo/dirty ballast tanks, flume openings, and bottom shell plating. Crude Oil Washing (COW) has also presented localized wastage problems due to direct impingement of crude and cleaner on surfaces. Tank coating conditions must be noted in the inspection narrative and coating restoration will be required if existing coatings have failed.

(2) CTIE. The size of cargo tanks on ULCCs and VLCCs presents a special problem in the examination of underdeck structural members.

(a) Methods of conducting an inspection have included rafts, high-powered lights with binoculars, special cranes, and catwalks. Although enhanced special surveys require “close up” inspections, conventional climbing about with a flashlight or staging methods are neither safe nor practical in larger cargo tanks. The method of tank inspection should be discussed and approved in advance of the vessel's scheduled inspection whenever possible.

(b) The raft method can be hazardous and should be conducted only with the OCMI's specific approval.

(c) Catwalks or other permanent in-tank structures may not be safe due to weakening from accelerated corrosion.

f. Tank barge examinations.

(1) The longer drydock intervals were established with the intent that the required intermediate ISEs would be thorough. It is imperative that a complete examination of internal framing, hull plating, and tank boundaries in the void and ballast spaces is conducted. The regulations allow an OCMI to require a vessel to be drydocked or otherwise taken out of service, if, during an ISE, damage or deterioration to the hull plating or structural members is discovered.

(2) Externally framed tanks. The 10-year CTIE interval permitted for double hull barges with externally framed gravity cargo tanks is applicable to those tanks that are externally framed on both ends, both sides, bottom, and top. Double hull barges with framed bulkheads in the cargo tanks, or with trusses, girders, or stanchions in the cargo tanks, qualify for the externally framed intervals as long as the exterior cargo tank envelope is externally framed (all six sides). In addition, on an interim basis pending inspection results per Subparagraph A.4.d(4) above, double hull barges that are externally framed with the exception of the deck must be considered to be externally framed. This policy must be applied to all 46 CFR Subchapter D and I double hull barges, and to those carrying 46 CFR Subchapter O products that have a "G" in the last column of 46 CFR Table 151.05.

7. Examination of Permanent Fresh Water Ballast Tanks

Ballast tanks containing permanent freshwater ballast may be exempted from internal inspection under the following conditions.

a. The ballast fluid is chemically tested to ensure that its corrosion-inhibiting properties are still effective. The test sample should be taken from mid-depth in the ballast tank.

b. The corrosion test plate is examined to ensure that the ballast tanks are free of corrosion.

c. An external examination of each ballast tank, to include bottom shell plating, tank top, and all internal structural members that constitute the exterior of the ballast tank, is conducted to the extent practicable to determine the external condition of the ballast tank.

NOTE: When significant corrosion is found, structural damage is evident, or the permanent ballast medium is determined to be inadequate, the OCMI may require that the subject tank be made gas-free (if necessary) and available for internal inspection.

C. UNDERWATER SURVEYS INSTEAD OF ALTERNATE DRYDOCK EXAMINATIONS

In December 1980, the Coast Guard published a research report, "1980 Underwater Technology Survey for Extension of Time Between Drydockings" (National Technical Information Service (NTIS) Report ADA 101-131). This report indicates that current technology, properly applied with additional administrative and operational controls, can provide a satisfactory means of inspecting the underwater bodies of vessels without them being hauled out.

Underwater examinations using video equipment have been accepted on occasion by the Coast Guard as a means of verifying the continuing acceptability of the structure of large MODUs since 1969.

Since publication of 46 CFR Part 107 in 1978, underwater examinations for column-stabilized and self-elevating MODUs have been allowed by regulation.

The revision of the drydock and tailshaft regulations in 1988 provide the option of alternating DEs with underwater surveys to owners and operators of tank vessels, cargo and miscellaneous vessels, and oceanographic research vessels less than 15 years of age, and also permit continued participation in the underwater survey program for vessels 15 years of age and older.

Vessels older than 15 years of age which have not previously participated in the underwater survey program are still eligible.

1. Entry into Underwater Survey Program

a. Pre-survey drydocking. An owner who desires to enter his or her vessel into the underwater survey program must first drydock the vessel. The purpose of this drydocking is to conduct a preliminary survey of the hull to evaluate its condition and the feasibility of conducting an underwater survey. This survey and the video discussed in Subparagraph C.1.d below are to be used as a reference for the first underwater survey once the vessel has been approved for the underwater survey program.

b. Hull markings. During the pre-survey drydocking, the vessel owner/operator must provide a means whereby the location of the diver relative to the hull can be determined with sufficient accuracy to locate specific points on the underwater body. This may entail a weld bead grid system on the hull, a contrasting color coating system, a movable grid, an acoustic "pinger" locating system, or any other arrangement that is satisfactory to the OCMI. Hull markings, or targets, every 100 feet, at the keel, below the turn of the bilge, and below the water line are recommended. Consideration should be given to the possibility that bottom coatings alone may wear off over time.

c. Sea chests. Hinged gratings must be installed on all sea chests to allow divers access into each sea chest to inspect the external sides of through hull connections and sea valves.

d. Reference video. Once all hull markings and preparations have been made, a video tape with audio commentary must be made of all external areas of the underwater hull, including rudder, propeller(s), tailshaft(s), hull protective system, and all other attached appurtenances. The video must clearly show the hull reference markings.

2. Applications for Underwater Surveys Instead of Alternate Drydock Examinations

Applications for underwater surveys should be submitted to the cognizant OCMI at least 90 days before the requested survey. In addition to the information required by the applicable sections of the CFR cited in C above, each application should include--

a. Identity of the diving contractor;

b. Number of divers to be employed, type of diving equipment to be used, and their underwater Nondestructive Testing (NDT) and damage repair capabilities;

c. Means of waterborne diver support;

d. Means of taking rudder bearing clearances;

e. A letter signed by the vessel's master, chief engineer, or the person in charge, stating the general overall condition of the vessel, level of maintenance, any known or suspected damage, cleanliness of the underwater body, and the anticipated draft of the vessel at the time of the survey;

f. The number of additional or vessel personnel that will be available to assist the dive team and Coast Guard marine inspector in conducting the underwater survey;

g. The anticipated duration of the underwater survey (experience indicates that at least 5-10 days should be allowed); and

h. Whether or not ISE, CTIE, and integral fuel oil tank exams as required will be conducted concurrently with the underwater survey.

---

3. Applications for Continued Participation in the Underwater Survey Program by Vessels 15 Years of Age and Older

Requests to continue in the underwater survey program for those vessels which will be 15 years of age or older at the time of the next underwater survey must be submitted to Commandant (CG-CVC) via the cognizant OCMI at least 90 days before the drydocking preceding the underwater survey.

This advance notice, which would be 3 to 5 years in advance of the requested underwater survey, is intended to ensure that a thorough assessment of the vessel is made during the drydocking preceding the underwater survey, with an eye towards the vessel's suitability to go twice the drydock interval between actual haul outs.

Additionally, advance notice will ensure that a complete set of suitable hull gaugings is taken. A complete set of hull gaugings is considered to be all of the gaugings deemed necessary by the OCMI to determine the condition of that particular vessel's hull. They should include, as a minimum, gaugings taken around two or more complete transverse sections of the hull. Plate gaugings of one or more strakes in the wind and water area, of additional transverse belts, or of questionable areas such as those with heavy pitting or fractures, may also be required.

The results of the drydock examination and the hull gaugings, together with the OCMI's recommendations, must be submitted to Commandant (CG-CVC) for final determination of whether the vessel may remain in the underwater survey program.

---

4. Preparatory Meeting

The Coast Guard inspector, a shipowner's representative, and a member of the diving team should conduct a preparatory meeting prior to the underwater survey to discuss the details of the survey. In the case of overseas surveys, every effort should be made to hold this meeting before the inspector proceeds overseas.

At this meeting, the duration of the survey, the site selection, the diver's equipment, personnel and operation, hull cleanliness and preparation, extent of internal examinations, route of the survey along the vessel's bottom, and the overall conduct of the survey should be discussed. In addition, the inspector will be able to advise the shipowner's representative and the diver of all the items the inspector intends to inspect during the underwater survey. Additional items may need to be surveyed depending upon the actual conditions found aboard the ship during the survey.

---

5. Conducting the Survey

The following guidelines have been developed based upon Coast Guard underwater survey experience, the NTIS report, and the ABS Guide for Underwater Inspections in Lieu of Drydocking Survey, 1975:

a. General. As a minimum, an underwater survey should include a general examination of the hull plating and a detailed examination of all critical welds, propeller, rudder, other hull appurtenances, sea chests, and sea valves.

(1) Detailed examination of other areas should be conducted as considered necessary by the inspector.

(2) It must be stressed that the underwater survey program is an option that the ship's owners/operators have elected to use. Responsibility for the management of the vessel, its personnel, and maintenance of necessary safety and service systems remains at all times with the master and his representatives.

b. Duration of the underwater survey. The underwater survey should take as long as the inspector considers necessary to ensure that the ship is in a safe condition to continue until the next DE (up to 3 years for salt water service and 5 years for fresh water service). Previous experience indicates that at least 5 days should be allowed to conduct the underwater survey. However, if problems develop or repairs become necessary, more time will be required. Initial estimates of the duration of the underwater survey should be proposed by the owner in the application and either refined or confirmed during the preparatory meeting.

c. Site selection. The location of the underwater survey is of the utmost importance for two major reasons.

(1) The site must be in an area with sufficient water depth under the keel and sufficient clearance adjacent to both sides of the vessel to allow the diver to safely survey the entire underwater hull of the ship, without concern for the presence of hostile sea life or high current velocities.

(2) The site must have good underwater visibility. Conducting an underwater survey in poor visibility could adversely affect the outcome of the program (equivalency to a DE) and the safety of the ship. Water turbidity (clarity) is a particularly subjective item, and the decision of acceptability should be based primarily on the clarity of the television monitor presentation. If the inspector feels that better visibility is necessary, the shipowner should be given the option of either moving the ship to a location with better visibility or drydocking the ship.

d. Additional personnel. Current trends in automation and reduced staffing may result in a situation where a vessel's normal complement will not provide a sufficient number of personnel to assist in the inspection process and maintain the shipboard watch. Additional personnel may be needed to act as line handlers to support the dive boat, to position a movable grid if used, to pull sea valves, etc. Consideration should be given to crew watchstanding responsibilities when evaluating the need for additional personnel.

e. Divers, diving equipment, and operations.

(1) The underwater survey should not be conducted unless the inspector is satisfied that the divers' equipment and procedures will provide a safe and meaningful examination of the ship. Safety must be foremost on the minds of all those working together on the actual diving operation. While matters in this regard are best left to the experienced, professional individuals normally found conducting this type of work, everyone involved in the survey should be alert to these needs and ensure that any requirements regarding this inspection can be safely accomplished.

(2) Acceptability of diving personnel and equipment. The owner should employ a professional commercial diving firm. Specific Coast Guard approval is not required, but a subjective evaluation by the OCMI or the attending inspector should be conducted. Such an evaluation may consider the following:

(a) Prior experience or training.

(b) Qualifications of dive team members in photography, NDT, underwater damage repair, and other training and experience.

(c) The type, quality, and condition of equipment to be used, i.e., a color monitor and color tape video recording system is required along with two-way recorded audio between the diver and the inspector. A still underwater photographic capability must also be available.

(d) The degree of professional approach/attitude, as evidenced by an organized dive plan, personnel assignments, standbys and backups, compliance with appropriate safety regulations (Coast Guard, Occupational Safety and Health Administration (OSHA), various states).

f. Hull preparation. The underwater survey should not begin until the inspector is satisfied that all areas of the hull to be inspected, including sea chests and sea valves, have been cleaned to allow for a meaningful examination. The method of cleaning is left to the discretion of the vessel owner.

(1) The inspector should review the reference video taken at the pre-survey drydocking to familiarize him or herself with the layout of the hull markings and overall condition of the hull at the time the recording was made.

(2) The internal examination (opening up) of sea valves may require diver installation of custom prefabricated blanks or watertight boxes on through hull fittings. Each hull opening to be blanked or plugged should be permanently marked or identified on the hull. This will simplify verification that blanks are inserted and removed from the correct hull openings. The ship should be at, or as close as possible to, its light draft.

g. Sea valves.

(1) Preparation. The preparation of the sea valves for inspection during an underwater exam is most critical, as it will affect the watertight integrity of the hull and the ability to keep essential machinery in operation. The vessel's personnel should develop and provide a detailed procedure prior to commencing the examination of sea valves. The procedure should, at a minimum, include the following:

(a) The number, type, size, and method of operating of the sea valves to be opened.

(b) The disabling of automation features which might affect the sea valves being examined.

(c) Method of installing blanks/plugs for sea chests/valves.

(d) A sequence of valves to be blanked/opened that ensures that vital cooling systems, essential electrical service, and bilge and fire pumping capabilities are maintained.

(e) The closure of watertight doors.

(f) An emergency procedures plan.

(g) Means of communication between the bridge, dive team and engine room (direct communications via sound powered phones are preferred).

(2) Safeguards. Removing and examining sea valves while a vessel is afloat and while some portion of the machinery plant remains in operation is a situation not generally experienced by shipboard personnel. Of necessity, all involved personnel should maintain the highest sensitivity to problems which may start out small but could lead to more serious matters. Intentionally disabling some systems is not a typical operation and should be carefully controlled by the ship's personnel. Sometimes the failure of internal safeguards or other construction features can lead to pressure in piping systems thought to be de-pressurized. This condition can lead to lengthy delays while the cause is located and corrected. Points to consider are as follows:

(a) Interconnected sea chest vents that meet below the water line will subject both sea chests to sea pressure unless both sea chests are blanked simultaneously.

(b) Failure of check valves can pressurize secured systems. This would most likely occur in crossovers between main and auxiliary fire pump lines, main and auxiliary cooling systems, and crossovers to the sanitary systems from any other salt water system.

(c) Temporary "jumpers" installed to keep essential systems on line may defeat the designed system isolation.

(d) Pressurizing auxiliary and sanitary systems with full fire main pressure can damage equipment designed for low pressure service.

h. Bearing clearances. Readings of the propulsion shaft bearing and rudder shaft bearing clearance should be taken. These readings should be acceptable to the inspector as accurate and reliable. Otherwise, drydocking the ship may be necessary. Clearances should be compared with those obtained during the last examination and meet the standards set in 46 CFR 61.20-23.

i. ISE, CTIE, and fuel oil tank exam. These exams include an examination of the vessel's main strength members, including major internal framing, hull plating, voids, and ballast tanks. In most situations, the ISE should be conducted before, or at the same time as, the underwater survey. The results of the ISE should be used to identify those areas where a problem exists or is suspect. These areas should be given special emphasis when conducting the external underwater survey.

j. Repairs and deficiencies. Any required repairs should be performed to the satisfaction of the inspector. Depending upon the magnitude of the repair or the number of repairs necessary, this may result in an unsatisfactory examination and require drydocking of the ship.

(1) Deficiencies that are not repaired, or are not considered severe enough to require repair, should be evaluated in conjunction with the overall results of the underwater survey in determining whether the ship should be allowed to operate a full interval until the next drydocking.

(2) If there is doubt as to whether a ship is in a sufficiently safe condition to operate a full interval until the next drydocking (up to 3 years for salt water service and 5 years for fresh water service), the ship should be drydocked.

k. Underwater inspection techniques and equipment.

(1) General. The attending inspector will generally be limited to viewing the television (TV) monitor, reviewing video tapes, talking with the diver, observing NDT procedures, reviewing any still photos, and reading the diver's survey report. This method of survey does not generally lend itself to the flexibility and "hands-on" aspects marine inspectors have come to know at normal haul outs. Nevertheless, there are a number of things that the inspector can and should prepare for.

(a) The diving operation will normally be a surface supplied air dive that includes the diver, a tender watching the diver's umbilical, a standby diver (usually the tender), and the diving supervisor. Communications with the diver should be via hardwire.

(b) The TV monitor should be located close to the diving supervisor's position to facilitate simultaneous viewing of the TV monitor and communication with the diver.

(2) Diver's observations. The diver's visual findings and commentary can be very beneficial. A knowledgeable inspection diver can provide detail and description to greatly enhance the usefulness of the TV monitor’s picture. For example, wiping off sea growth to clear a picture of weld or carrying a short ruler or a marked diving knife to give dimensions can be helpful to topside viewers.

(a) The diver’s camera provides a small field of view. The view can be affected by water clarity, the diver's exhaust bubbles, the diver's motion and speed of advance, glare from the diver's light as well as the amount of available light, etc. The diver's comments on the overall condition of the hull regarding sea growth, damages, and the coating system may prove to be helpful, but the inspector should maintain control of the inspection by requiring the diver to proceed at a pace such that there is good visual acuity of the section of the hull being photographed. The inspector may also have to direct the diver to

adjust the attitude of the camera to reduce glare or to bring an item more into focus.

(b) The measure of reliance upon such information is left to the judgment of the inspector at the time of the inspection and, ultimately, to the OCMI.

(3) Monitor system. A color TV system should be used. A color bar or test slate should be available to allow proper adjustment of the picture for maximum efficiency and clarity. This includes consideration for a compatible lighting system (type of light, candlepower, etc.). The monitor presentation should be satisfactory to the inspector/OCMI. It should concentrate on hull appurtenances (propellers, rudders, bilge keels, sea chests, etc.) as well as any areas of damage. Although it may not be necessary to cover every inch of every weld on the underwater body, the attending inspector/OCMI should be satisfied as to their satisfactory condition.

NOTE: The owner should provide a copy of the audiovisual tape and the written report by the diving company to the OCMI.

(4) Photography. Still photography generally provides better detail than TV images. This is particularly useful in specific or localized applications such as damage or deformation. Its use is highly recommended when questionable areas are found on a hull.

(5) NDT procedures. These may consist of the diver's visual examination, magnetic particle inspection, or ultrasonic testing. Magnetic particle methods are available for crack detection or help in determining the extent of cracks. Ultrasonic testing is recommended for thickness gauging. In any case, operators should be appropriately qualified and qualifications should be verified. Equipment calibration is likewise necessary.

l. Acceptable underwater repairs. Limited underwater repairs are possible, using newly developed techniques or materials. Some applications of welding, both wet and dry, are possible below the water's surface. Presently, any underwater weld should be considered a temporary repair, subject to reevaluation at subsequent inspections and haul outs.

m. Evaluating results of the survey. The ship's operating schedule should not prevent the underwater survey from being conducted to the complete satisfaction of the inspector. If the OCMI is not completely satisfied with the results of the survey, credit should not be given for the survey.

D. TAILSHAFT EXAMINATIONS

1. Introduction

Periodic examinations of tailshafts are conducted to determine--

a. Evidence of undue wear on the liner or bearing;

b. Cracks in the shaft or liner; and

c. That the watertight integrity of the through-hull assembly (gland, bearing, and seals) remains satisfactory for continued service.

2. Inspection Standards and Applicability

The regulations which generally apply to ocean and coastwise vessels are 46 CFR 61.20-15 through 23. These regulations reserve all extension authority for the Commandant. That extension authority is delegated to the district commanders for certain vessels per Subparagraph A.4.d(9) above.

a. T-Boats. For these vessels, the only regulations require the inspector to examine the tailshaft and stern bearing to determine that they are in satisfactory condition.

b. Great Lakes vessels. 46 CFR 61.20-23 applies only to vessels operating on ocean or coastwise routes. There are no comparable Coast Guard regulations for vessels operating on other routes.

(1) For these vessels, the standards in the ABS Rules for Building and Classing Steel Vessels may be used as a guide to determine the limits of weardown in the stern tube and strut bearings. The ABS Rules permit an additional 1/16" weardown for Great Lakes service when the shaft diameter is 12 inches or less, and an additional 1/8" weardown when the shaft diameter exceeds 12 inches.

(2) The ABS Rules may also be used in determining the limits of weardown for other vessels on inland routes, but they should not be applied as mandatory requirements for corrective action to be taken when these limits are exceeded or as authorization for weardown to reach these limits.

(3) Requirements for corrective action on inland vessels must be determined by the OCMI, depending on the route, the diameter of the shaft, the type of bearing, and other safety factors involved.

c. Propellers without tailshafts. Thrusters and similar propulsion units without "in-line" shafts are not normally subject to tailshaft examination requirements (see MODU requirements in D.11 below).

---

3. Examination Intervals

46 CFR Part 61 requires propulsion tailshafts to be drawn for examination at different specified intervals based on various criteria, such as the number of separate propulsion shafts; materials of fabrication; whether or not the shaft is exposed to saltwater; type of bearing lubrication; whether or not the shaft has stress reduction properties, type of bearing material; and propeller-to-shaft connections.

Whether or not the shaft has been previously repaired should also be considered when determining if the examination interval should be reduced from that required in regulation.

---

4. Examination Procedures

When examining a tailshaft, the inspector must pay special attention to detecting fractures and wear in way of the taper, keyway, and liners. The stern bushing (after bearing) must also be carefully examined, and replaced or rebushed if necessary.

At every DE and underwater survey, the inspector must determine the amount of wear in the after tailshaft bearing. The inspector must require corrective action to be taken on all vessels when--

a. The clearance exceeds the limits prescribed in 46 CFR 61.20-23 for ocean or coastwise vessels;

b. The condition of the bearing, shaft, or liner is determined to be unsatisfactory; or

c. The wear is otherwise considered excessive. For oil bearings, the manufacturer's instructions for periodic maintenance and examination should be followed.

---

5. Design Standards to Reduce Stress Concentrations

a. Generally speaking, there are several different factors recognized to reduce stress concentrations in tailshaft design. These include--

(1) Spooning the forward area of the keyway;

(2) Slotting the forward end of the key;

(3) Locating the first keybolt well back from the forward end of the key;

(4) Providing an ample fillet at the bottom corners of the keyway;

(5) Radiusing the corners at the top of the keyway;

(6) Providing a hoop stress groove for the liner; or

(7) Using a gradual rise from the bottom of the keyway to the surface of the shaft and ending several inches back from the propeller hub counterbore.

b. Also, a keyless design strives to eliminate stress concentrations. Regardless of design, the forward one-third of the taper remains a critical area to be examined for fractures.

---

6. Tailshafts with Non-Continuous Liners

To determine the interval at which a tailshaft must be drawn under 46 CFR 61.20-17, tailshafts that have a non-continuous liner may be considered as having continuous liners, provided the liner sections are joined as follows:

a. The gap between the sections must be 1 inch or less; and

b. The connection between them must be made of vulcanized or synthetic rubber that is reinforced between layers.

---

7. Bearing Weardown

Weardown readings give a general indication of any change in the clearance between the bearing and the shaft.

For oil bath bearings, weardown readings are compared with the original readings that were taken when the bearings were installed or renewed. For water lubricated bearings, the weardown is either a measure of the total clearance between the bearings and the shaft (wood bearings), or the depth of the water groove (rubber bearings).

The methods used to take weardown readings should duplicate those used for the original readings as much as possible. This includes the same measuring instrument and method, shaft location and loading, and even environmental conditions.

---

8. Water Lubricated Bearings

With wood or rubber bearings, feeler gauges of known thickness can be inserted between the shaft and the bearing to determine the amount of weardown.

Weardown may also be taken on wood bearings with a small wedge. The wedge is inserted between the shaft and then removed. The impressed clearance is measured with a micrometer to determine the weardown.

See 46 CFR 61.20-23(a) for maximum weardown readings for wood bearings.

Rubber bearings must be renewed when any water groove is found to be half its original depth.

---

9. Oil Lubricated Bearings

Experience has shown that oil bearing tailshafts rarely have problems unless they are disturbed. Drawing, shifting, or bumping the tailshaft requires the removal of bearing seals and increases the chance of scoring the tailshaft and bearings. Tailshafts with oil lubricated bearings need not be drawn for examination provided the provisions of 46 CFR 61.20-17(d) are met. Weardown readings should be taken and compared to previous readings, and the results of the required semi-annual lubricating oil analysis should be reviewed.

---

10. Strut Bearings

On vessels with separate strut bearing arrangements, both the after stern tube bearing and the strut bearing need to be evaluated.

a. The after stern tube bearing should be evaluated for watertight integrity reasons. Weardown readings are normally taken. This portion of the tailshaft is not required to be shifted aft.

b. The strut bearing is of primary importance for evaluating the overall bearing wear and tailshaft condition. Although the tailshaft bearing weardown requirements in 46 CFR 61.20-23 refer to the "after stern tube bearing," the intent is to evaluate weardown at the aftermost bearing. The weardown requirements therefore apply to the after strut bearing.

c. Oil lubricated strut bearings may be examined without shifting the shaft aft under the equivalent inspection arrangement described in D.9 above.

---

11. Tailshafts on MODUs

MODUs are provided an alternative tailshaft inspection procedure in 46 CFR 61.20-17. To meet the requirements of 46 CFR 61.20-17, a MODU's tailshaft(s) should be examined during each underwater examination for credit. An examination procedure should be included in the special plan submitted by the vessel's owner in accordance with 46 CFR 107.265 or 107.267. During approval of special examination procedures, the OCMI may require any tests or examination requirements that are deemed necessary to ensure satisfactory condition of the tailshafts.

a. To examine wooden or rubber bearings, a hole in the top of the rope guard and a suitable wedge or gauge should be provided for checking the clearance. For oil lubricated bearings, means of ensuring that the oil seal is intact and for checking the stern bearing clearance should be provided. Maintenance records and a statement from the chief engineer should also be used to evaluate the condition of the tailshaft(s).

b. Tailshafts, seals, and bearings on MODUs, regardless of the vessel's propulsion designation (self-propelled, propulsion assisted, non-self-propelled), may be more significant to the vessel's overall safety from a flooding hazard viewpoint than as a loss of propulsion. Inspectors should evaluate the flooding potential of shaft bearings and seals as is done with other through hull fittings.

---

12. Flanged Tailshafts with PropellerCoupling Bolts

The NDT of propeller flange bolts that may be exposed to corrosive environments is particularly important. The testing procedure and the operator's qualifications should be approved by the inspector. For bolt designs that are totally enclosed in oil (e.g., a Ross Turnbull bearing design), the NDT requirement of 46 CFR 61.20-18 may be waived, provided both a visual examination and oil sample analysis are satisfactory.

---

13. Oil Sampling

The reliance on lubricating oil analysis to detect early seal failure or bearing wear emphasizes the importance of proper sampling techniques. Oil samples should be taken in accordance with the bearing manufacturer's recommendations or at a minimum of once every 6 months. The sample should be taken from a low point in the system to catch any water or metal filings in the system.

---

14. Tailshaft Repairs

MSM Volume II, Material Inspection, COMDTINST M16000.7A (series), Chapter A5 contains a discussion of welding repairs that is applicable to tailshafts.

E. RUDDER ASSEMBLIES

---

1. Rudder Stocks on C3 Freighters

Certain C3-type cargo vessels were fitted out with cast steel rudder stocks, with the stock cast integral with the upper palm. On some of these vessels, cracks have been detected just above the rudder stock palm, apparently due to the short fillet. In several cases, these cracks had progressed to the point where a complete fracture occurred. However, available information indicated that the incidence of fracture in these rudder stocks was not serious enough to warrant rejection of the design.

During drydock inspections of this type of vessel, particular care must be taken to determine whether fillet cracks have started in the forward end of the upper rudder stock palm assembly. If so, corrective repairs or replacement must be required. Repairs can be made if the casting is of homogeneous structure. Unfortunately, this is generally not the case with wartime material. Replacement stocks should be of forged, rather than cast, material.

---

2. Pintle, Rudder, and Rudder Post Defects

a. Vessels with semi-balanced rudders (without rudder posts).

(1) Case histories. Generally, these are T2-type tank vessels, although the examinations described here should be conducted on all vessels with similar rudder arrangements. One vessel's loss of this type of rudder is believed to have resulted from fracturing of the lower pintle in heavy weather. The entire rudder below the rudder stock palm, the lower pintle, the pintle, and the pintle nut were missing completely; the upper pintle was bent. Another vessel having such a rudder assembly lost the rudder; investigation revealed that the lower pintle had broken off completely, just below the securing point.

(2) Inspection requirements. In view of such casualties, when a pintle is found loose or is withdrawn for any other reason, it should be examined by magnetic particle testing or another suitable method. It is particularly important to examine the pintle adjacent to the sleeve and between the threads and the small end of the taper.

(a) During the drydock examination, the condition of the pintle bushings, sleeves, nuts, and locking devices should be carefully examined. The discovery of a loose pintle would certainly justify its removal for further examination and verification of proper fit.

(b) Finally, the arrangements of the pintle locking devices should be such that the pintle cannot work free (on a third vessel, the pintle was found to have backed off, leaving the nut held in place only by a clip welded to the rudder framecasting). It is essential for the nut to be positively secured, to preclude "turning" of the pintle.

b. Vessels with rudder posts. Generally, these are C3-type cargo vessels, although the examinations described below should be conducted on all vessels with similar rudder arrangements.

(1) Fractures have been found on some of these vessels in the rudder post castings just above or below the gudgeons; similar fractures have been found in the

rudder frame casting. In some cases, the fractures in the rudder frame and rudder posts extended from or into the core-hole closing plates on the after side of the rudder post.

(2) During drydock examinations, the rudder frame and rudder post castings must be carefully examined at close range for possible fractures.

(3) When conditions are suspect, the rudder post casting should be drilled about 6 inches above the welded joint to determine if water has entered the rudder post. If so, or if fractures are evident in the vicinity of the rudder frame gudgeons, a part of the rudder side plating should be removed for examination of the cast rudder frame arms, to which the horizontal diaphragms are attached. Particular attention must be directed to the casting at the midheight of the rudder.

F. SEA CONNECTIONS

1. General Care

It is essential that all sea connections and their attached fittings are carefully inspected while a vessel is drydocked or undergoing other inspection.

In one instance, a 3-inch nipple spool piece on the sanitary sea chest of a government vessel wasted away undetected. This led to a casualty that cost nearly $1 million when the vessel's engineroom flooded.

It is imperative for all sea connections to be thoroughly examined and determined to be in good condition, even if drydocking is required to accomplish this. Particular attention must be directed to piping and fittings installed between sea valves and the sea.

2. Condenser Water Boxes

a. Case histories. Investigation of one sinking determined that the outlet water box of the vessel's main condenser had ruptured. This resulted in a stream of water approximately 20 inches in diameter that flowed freely into the engineroom at approximately 20,000 gallons per minute.

(1) The overboard and sea valves, 24-inch gate valves, each required two people to make 40-50 turns to close them. Attempts to close the valves failed because of the

rapidity of the flooding. Approximately 5 minutes after the water box had ruptured, the engineroom was abandoned with the valves closed only partially.

(2) The condenser water boxes had been opened and examined by ship's personnel only 6 weeks before this casualty; 8 months earlier, they had been painted over with apexior. The last inspection for certification had been made 16 months before the casualty. Neither crewmembers nor the inspector had noted any defects, and the condition of the water boxes was considered satisfactory at the time.

(3) Within a few months of this casualty, another vessel was inspected after complaints of a defective main condenser water box. The water box was found to be pinholed, and had 2 brass plate patches and a 20"x18"x16" cement patch. Both vessels were built in the 1940s; available records indicated that the water boxes had not been replaced since the vessels were put into service.

b. Inspection requirements. Considering the age of such installations, it is essential for all condenser water boxes to be examined closely, at frequent intervals, both by ship's personnel and by Coast Guard inspectors.

(1) At all inspections for certification, annual inspections, and periodic inspections of cargo and tank vessels, the inspector should examine condenser water boxes externally for patches, temporary repairs, and other obvious defects. In addition, the inspector should ask the ship's personnel about inspections they have made and the conditions observed.

(2) When conditions so warrant, the inspector must make internal examinations or tests to verify that the water boxes are in satisfactory condition, or to determine the extent of required repairs.

---

3. Nonmetallic Expansion Joints

In one situation, a casualty to a rubber expansion joint in the main low-sea suction intake of a vessel resulted in flooding of the engine room and the near loss of the vessel.

The life expectancies of nonmetallic expansion joints depend upon their applications and the surrounding environments. For this reason, 46 CFR 61.15-12 requires the replacement of these expansion joints within 10 years after installation.

A complete internal examination should be made of nonmetallic expansion joints whenever they are available for inspection and when external visual inspections reveal wear or other signs of deterioration or damage. If an adequate external or internal examination cannot be conducted by the inspector, the expansion joint should be removed for inspection.

The following are various problem areas associated with rubber expansion joints, their probable causes, and recommended repairs:

a. Leaks at the flange. Retaining ring splits should be as close together as possible and flat steel washers should be used on the bolts over the splits. The bolts should be tightened uniformly by moving alternately around the flange from bolt to bolt until the rubber on the joint flange bulges slightly and uniformly between the steel retaining ring and the piping flange.

b. Cracks at base of arch or flange. These are caused by unexpected pipe movements that put excessive stress on the joint, most commonly from initial misalignment at the time of installation, excessive pipe movement, improper anchorage, or failure to use control rods. If such cracks are severe enough to interfere with the integrity of the joint, it must be replaced after the cause of the damage has been corrected.

c. Ballooned or otherwise deformed arches. These indicate interior displacement of reinforcing rings or wire, usually because of higher-than-recommended pressures. The joint must be replaced after all working conditions have been checked and proper recommendations made.

d. Loose outer body fabric. A feeling of softness or looseness near the surface of the arch indicates a loss of adhesion between fabric plies. If plies have separated, the joint must be replaced.

e. Spongy feeling of the joint body. This is caused by moisture penetration and deterioration of the fabric, usually from loose bolts or deterioration of, or physical damage to, the bolt hole sealant. Operating conditions should be checked and the joint replaced.

f. Hardness and cracking of the cover. This is caused by exposure to extreme heat, chemical fumes, ozone, and other elements in service conditions. The joint should be replaced after the cause has been determined and corrected.

g. Cuts and gouges in the cover. These are caused by careless handling or damage from tools. Repairs should be made after consultation with the manufacturer and notification of the OCMI.

G. CREDIT FOR DRYDOCKING IN FOREIGN YARDS

Occasionally, vessel owners request credit for foreign drydockings that were not witnessed by Coast Guard inspectors. These requests are normally denied.

However, in certain unusual cases, the Commandant has authorized OCMIs to grant extensions of time for making permanent repairs or credit for drawing of the tailshaft in a foreign yard. In the interest of safety, extensions are generally discouraged. Commandant (CG-CVC) will consider crediting foreign drydockings in unusual cases, upon a written request from the vessel owner or the owner's representative.

The request must include--

a. Evidence that the drydocking was performed due to an emergency, not for routine repairs, cleaning, or inspection;

b. Documentary evidence that the vessel's underwater hull and fittings were in a satisfactory condition at the completion of the drydocking. Normally, a certified copy of the drydocking report should be submitted by the foreign government's inspector or the classification society to indicate the conditions found and any repairs made; and

c. Evidence that an inspection was requested, but an inspector was unavailable.

H. RECORDS OF DRYDOCKINGS

See MSM Volume II, Material Inspection, COMDTINST M16000.7A (series), Chapter A3 for information on the forms and means of recording hull examinations.

I. CRITICAL AREA INSPECTION PLAN (CAIP) SURVEYS

General hull examinations required as a part of a vessel's CAIP will be conducted as outlined in NVIC 15-91, NVIC 15-91**,** Change 1, and MSM Volume II, Material Inspection, COMDTINST M16000.7A (series), Chapters A5 and B4.

J. GUIDANCE IMPLEMENTING THE INTERNATIONAL CONVENTION ON THE CONTROL OF HARMFUL ANTI-FOULING SYSTEMS ON SHIPS FOR DOMESTIC VESSELS

The International Convention on the Control of Harmful Anti-fouling Systems on Ships (AFS) Convention was adopted by the IMO to prohibit the use of harmful organotins in anti-fouling paints used on ships and to establish a mechanism to prevent the potential future use of other harmful substances in anti-fouling systems. Starting on November 21, 2012, U.S. flagged vessels, wherever located, and foreign flagged vessels in the internal waters of the United States, in any port, shipyard, offshore terminal, or other place in the United States, lightering in the territorial sea of the United States, or anchoring in the territorial sea of the United States, must comply with the applicable portions of the AFS Convention as outlined below. The type of anti-fouling systems controlled (prohibited) are specified in Annex 1 of the Convention. The Coast Guard implements the AFS Convention through the Coast Guard Authorization Act of 2010 (P.L. 111-281, October 15, 2010), (33 U.S.C. 3801 – 3857). Compliance verification for U.S. and foreign vessels shall follow the process and scope as described in the applicable portions of this manual.

The International Anti-fouling Systems (IAFS) Certificate and attached Record of Anti-fouling Systems (ROAFS), document compliance with the AFS Convention. U.S. flagged vessels 400 gross tons and above, as measured under the International Convention on Tonnage Measurement of Ships, 1969 (ITC), engaging on international voyages (excluding fixed or floating platforms, floating storage units, and floating production storage and off-loading units), must demonstrate compliance with the AFS Convention through possession of an IAFS Certificate (33 U.S.C. 3821). Those U.S. vessels not in compliance with the AFS Convention may be subject to foreign port state control actions when engaged on international voyages. Therefore, Sector Commanders/OCMIs should encourage proactive compliance with this section of the MSM to avoid detention of U.S. vessels in foreign ports. All vessels 24 meters or more in length, but less than 400 gross tons engaged in international voyages, except those specifically excluded by reference (a), shall carry a Declaration signed by the owner or owner's authorized agent (33 U.S.C. 3822). This Declaration shall be accompanied by appropriate documentation (such as a paint receipt or a contractor invoice) or contain an appropriate endorsement. This Declaration may also take the form of a Statement of Voluntary Compliance (SOVC). The format of a Declaration and a template form can be found in Appendix 2 to Annex 4 of the AFS Convention.

For applicable U.S. vessels, the Coast Guard or Recognized Classification Society (RCS) will verify compliance with the provisions of the AFS Convention and issue IAFS Certificates and attached ROAFS during routine scheduled inspections. As noted in above, vessels over 400 ITC engaged in a least one international voyage must carry an IAFS certificate (33 U.S.C. 3821). All inspected vessels to which the AFS Convention is applicable, but that do not require an IAFS Certificate due to size or tonnage, will receive an endorsement on their Certificate of Inspection (COI). The endorsement will read as follows: "*This vessel's anti-fouling system has been verified to meet the requirements of the International Convention on the Control of Harmful Anti-Fouling Systems*". Verification of

anti-fouling systems will normally be conducted during inspection for certification, annual re-inspection, dry-docking, or an annual survey conducted by the RCS. The Coast Guard or RCS may conduct AFS Convention compliance surveys and issue IAFS Certificates upon request at anytime if an international voyage is anticipated and the certificate is required prior to that voyage. The Coast Guard or RCS will conduct the following compliance exams for the issuance and endorsement of IAFS Certificates:

1. Initial Survey: Under the AFS Convention, Annex 4, Regulation 1, an initial survey must be carried out for a new construction vessel or for an existing vessel before the IAFS Certificate is issued for the first time. The OCMI or RCS will verify that the vessel's anti-fouling system fully complies with the requirements of the AFS Convention. After successfully completing the examination, the Coast Guard or RCS will issue the IAFS Certificate. The IAFS certificate ceases to be valid when the AFS is changed or replaced.

2. Changes to the AFS: A survey must be carried out whenever an anti-fouling system is changed or replaced. Such surveys should cover the same scope as an Initial Survey and a new AFS Certificate shall be issued. In accordance with Resolution MEPC.195(61), Guidelines for Survey and Certification of Anti-fouling Systems on Ships, a vessel undergoing a major conversion which affects the anti-fouling system may be required to undergo an initial survey as determined by the OCMI or RCS. Repairs affecting approximately twenty-five (25) percent or more of the anti-fouling system should be considered as a change or replacement of the anti-fouling system.

3. Procedures for Conducting Surveys: Article 10 of the AFS Convention requires vessels to be surveyed and certified in accordance with the regulations contained in Annex 4 of the AFS Convention. The types of anti-fouling systems controlled (prohibited) are specified in the table located in Annex 1 of the AFS Convention. The OCMI or RCS should use the procedures adopted by the Marine Environmental Protection Committee as outlined in Resolution MEPC.105(49), Guidelines for Inspection of Anti-Fouling Systems on Ships to conduct the required surveys. Only upon successful completion of the survey/examination will the IAFS Certificate be issued.

4. Noncompliance with AFS Convention Requirements: Operation of a vessel on international voyages without an IAFS Certificate may subject the vessel to detention by foreign port state officials. If the OCMI or RCS cannot determine if a vessel's anti-fouling system is in compliance with the AFS Convention, the OCMI or RCS shall withhold issuance of the IAFS Certificate until compliance is proven and restrict the vessel's route to domestic voyages only. Other enforcement actions by the Coast Guard may include Letters of Warning, Notice of Violations, or civil penalty actions as determined by the OCMI.

5. Obtaining an IAFS Certificate from the Coast Guard or RCS: Vessel owners and operators of U.S. flagged vessels should contact their cognizant OCMI or RCS for an inspection/survey and issuance of an IAFS Certificate and ROAFS. The IAFS Certificate and ROAFS issued by the Coast Guard are available under USCG Form numbers CG-6059 and CG-6059A, respectfully. Only RCSs that have been delegated the authority to issue IAFS Certificates on behalf of the Coast Guard in accordance with 46 CFR 8.320 may issue IAFS Certificates to U.S. flagged vessels (76 FR 76896, (December 9, 2011)). Prior to U.S. ratification of the AFS Convention, RCSs may have issued SOVCs to those vessels meeting AFS Convention requirements. Vessel owners and operators who currently possess a valid SOVC should now contact their RCS for issuance of an IAFS Certificate. Vessel owners and operators may request the Coast Guard issue an IAFS Certificate based on a SOVC provided there is sufficient proof that the anti-fouling system has not been changed or replaced since the SOVC was issued.

6. Marine Information for Safety and Law Enforcement (MISLE): When the AFS inspection is conducted as part of a COI, annual, dry-dock, or other inspection activity, a notation shall be made within the activity's narrative. If the AFS inspection is conducted as a standalone inspection, it should be documented as an "Administrative Inspection" with the inspection details documented in the narrative. Once issued, a copy of the IAFS Certificate shall be scanned and attached into the vessel's list of documents.

CHAPTER 4: INSPECTION PROCEDURES APPLICABLE TO VESSEL TYPES, CLASSES, AND CATEGORIES

A. SMALL PASSENGER VESSELS ("T-BOATS")

1. INTRODUCTION

The statutes relating to the inspection and certification of small passenger vessels are found in 46 U.S.C. 3301, et seq. The implementing regulations, in Title 46 CFR, require a realistic appraisal of the operational needs of this industry. Because there are many types of vessels and operations to consider, it is impractical to try to develop regulations that cover all situations. Under 46 CFR Subchapter T, Officers-in-Charge, Marine Inspection (OCMI) are authorized to accept alternates or equivalents and to grant departures from the regulations when circumstances so warrant. In the development of the T-boat regulations, the primary considerations were--

a. Ignorance or misunderstanding of the hazards of the sea by most passengers;

b. Overloading, fires, explosions, and marginal seaworthiness (these had caused several serious casualties on uninspected passenger-carrying vessels); and

c. The need for a means of ready escape and survival in case of casualty.

SPECIAL CONSIDERATION:

Inspection personnel involved in the T-boat inspection program should never assume that vessel owners or operators are familiar with Coast Guard regulations and procedures. Inspection personnel must communicate with these owners and operators on a continuing, personal basis to explain requirements in detail. Experience has shown that after a vessel is inspected and requirements are explained, most of an owner's apprehension subsides and cooperation is enhanced.

Reports of inspection for certification and reinspection should note all items that have required interpretations of regulations by the OCMI, the district commander, or the Commandant. Such items include equivalents, substitutions, non-approved equipment, nonstandard fuel tanks, variations from subdivision standards, etc. These notes will form the basis for comparison of installed items with regulatory requirements at subsequent inspections.

2. Application

a. Title 46 U.S.C. 3301(8) requires the inspection of small passenger vessels. Title 46 U.S.C. 2101(35) defines "small passenger vessels," and 46 U.S.C. 2101(21) and (21a) define "passenger" and "passenger for hire." These statutory definitions should be used in applying the inspection regulations.

b. There have been inquiries concerning application of the passenger vessel laws to vessels which are owned by a corporation, specifically in reference to the exemption in 46 U.S.C. 2101(25) and whether corporate owned vessels could ever be used only for pleasure. Each investigation into possible illegal passenger vessel operations must be evaluated based on the facts of that specific case. There are many corporate owned, documented vessels with pleasure as the only endorsement. Some of these vessels may be operating illegally by carrying passengers; however, most are undoubtedly legitimate, corporate-owned, pleasure vessels.

c. Corporate ownership alone does not prove that a vessel is a small passenger vessel. If business was not conducted during the voyage (i.e. carrying company employees as a morale incentive or bonus for performance) and no expectation of future business was anticipated (good will) from the voyage, the vessel should be considered as being operated for pleasure, and not as a small passenger vessel.

---

3. Inspection Standards

a. By statute, vessels less than 100 gross tons (GT) carrying more than 6 passengers must be inspected and certificated under 46 CFR Subchapter T, unless they are exempted from inspection by 46 CFR 175.100(b).

(1) Such vessels are referred to as "T-boats."

(2) The regulations only apply to vessels carrying more than 6 passengers.

(3) Vessels carrying more than 150 passengers are subject to certain additional requirements contained in 46 CFR Subchapters F, H, J, K, and P, as determined by the OCMI. (Those vessels come under Subchapter K classification are called "K-boats").

b. <u>Vessels carrying freight for hire</u>. A T-boat may carry freight for hire, provided that--

(1) None of the cargo is prohibited from carriage on passenger vessels under 49 CFR Subchapter C (Hazardous Materials);

(2) Sufficient space is provided for the number of passengers carried;

(3) The vessel's stability is not endangered;

(4) The vessel is not overloaded;

(5) Passenger emergency escapes and access to emergency systems are not blocked; and

(6) Passengers are notified of the presence of any dangerous articles or of any other conditions or circumstances that would constitute an element of risk.

c. Hazardous materials. All 46 CFR Subchapter T vessels are subject to the Hazardous Materials Transportation Act (HMTA) (U.S.C. 1801-1812) when carrying hazardous materials. For the purposes of 49 CFR, a vessel is a cargo vessel when it carries 16 or fewer passengers. When carrying more than 16 passengers, 46 CFR Subchapter T vessels are small passenger vessels.

d. Foreign vessels. A vessel of a foreign nation party to the 1974 International Convention for the Safety of Life At Sea (SOLAS), and to the 1978 Protocol to the convention, that possesses a valid Passenger Ship Safety Certificate or Exemption Certificate must be examined at least annually.

(1) If the vessel is in compliance with requirements of the SOLAS convention, it must be issued a Control Verification for Foreign Vessel, CG-4504.

(2) A Canadian vessel possessing a valid Canadian Certificate of Inspection (COI) must be examined at least annually.

(3) If the vessel is in compliance with the terms of its COI, it must be issued Control Verification for Foreign Vessel, Form CG-4504.

(4) Foreign vessels that meet the applicability requirements of 46 CFR Subchapter T and do not possess SOLAS certificates must be inspected and certificated in the same manner as U.S. vessels.

e. Vessels propelled by sail. A sail vessel, for purposes of 46 CFR Subchapter T, is a vessel that is propelled entirely by sail. A vessel with sails that also has means of steam, mechanical, or electrical propulsion must not be considered a sail vessel.

f. Temporary COIs. A Temporary Certificate of Inspection, CG-854 must be used as on other inspected vessels. Pending receipt of new Temporary Certificate of Inspection, Forms CG-854, reference to "46 U.S.C. 399" in the first paragraph should be changed to "46 U.S.C. 3309(b)."

g. Accepted classification society standards. The American Bureau of Shipping (ABS) and Lloyd's Register of Shipping are currently the only classification societies whose

standards of construction and equipment have been accepted by the Commandant relative to vessels inspected under 46 CFR Subchapter T.

h. Life ring buoys. 46 CFR 160.050 previously required the marking of life ring buoys as follows: "For use on motorboats not carrying passengers for hire." These markings are no longer required; however, life ring buoys already manufactured must not be disapproved on the basis of such markings.

i. Spare fuel for outboard motors. Under the authority of 46 CFR 147.45, the Commandant has certified the on-deck stowage of spare gasoline on T-boats. This applies to vessels that are propelled by outboard motors, as well as vessels carrying tenders, launches, etc., that are propelled by outboard motors. This certification is contingent upon the following conditions:

(1) The gasoline must be carried in steel containers with a capacity not exceeding 23 liters (6 gallons), constructed so as to have a built-in ullage space.

(2) Such containers must be of at least 20-gauge, welded steel construction built to withstand an internal pressure of 25 psi.

(3) Containers for holding gasoline must comply with the American Boat and Yacht Council, Inc. (ABYC) H-25 standard for portable fuel systems and portable containers for flammable liquids.

(4) To facilitate effective firefighting, containers for holding gasoline must be stowed in a rack on deck as far as possible from areas normally transited by passengers. Particularly, they must be stowed away from ventilation intakes and sources of ignition. The stowage arrangement must be approved by the OCMI.

(5) Fire extinguishing devices and their locations must be approved by the OCMI.

(6) A maximum of 10 gasoline containers may be stowed aboard the vessel at any time.

(7) "No Smoking" signs must be prominently displayed in the container stowage area.

(8) Empty containers must be handled and stowed with the same care as full containers.

(9) The vessel's COI must be endorsed to reflect the stowage of gasoline containers aboard.

(10) Final authority to authorize such carriage of gasoline rests with the OCMI. It should be granted only after the vessel's owner documents a bona fide need for the extra fuel and meets all the control conditions.

j. Radiator or air cooled engines. Radiator or air cooled engines are prohibited by 46 CFR 182.420. This regulation was the result of a past ABYC standard to discourage the use of standard-type automobile engines, which had proven unreliable. The ABYC now permits air or radiator cooled engines provided that there is adequate ventilation for the engine. A departure from this regulation is authorized for well protected and ventilated engines, provided that a temperature alarm and remote indicator are installed. 46 CFR 182.420 will be revised to reflect this change in policy.

k. For application of SOLAS 74, see Chapter E2 of this Manual.

l. For information on Marine Sanitation Devices, see Chapter C2 of this Manual.

---

4. Control of Unseaworthy Vessels

An uncertificated T-boat may be sold to a party who wishes to carry more than six passengers without having it inspected and recertificated, whether in ignorance or intentional disregard of the inspection statutes and regulations. This could result in operation of an unseaworthy vessel that subjects its passengers and crew to potential hazards. Therefore, upon voluntary surrender or withdrawal of a T-boat's COI, the OCMI must notify the owner, in writing, of the following:

a. The vessel may not carry more than six passengers unless it is inspected and certificated for passenger service.

b. If the vessel is disposed of by sale, transfer, or other means, the former owner should inform the buyer of the obligation to obtain a valid COI before operating the vessel with more than six passengers. The former owner should notify the OCMI of the transaction within 48 hours, providing the name and address of the new owner.

c. Continued operation or use of the vessel for any purpose in an unseaworthy condition may constitute negligent operations under 46 U.S.C. 2302, and may subject the owner to civil or criminal penalties.

ACTION GUIDANCE: Notification may take the form of the sample letter found in Figure B4-1. A copy of the notification must be placed in the vessel's file. If the vessel is documented, a copy must be forwarded to the vessel's port of documentation. OCMIs must maintain a monitoring program for all T-boats within their zones that are determined to be unseaworthy. Local Coast Guard and Coast Guard Auxiliary units should be advised of the names of such vessels. To assist inspectors and Auxiliary Courtesy Examiners, T-boats are required to display a Certification Expiration Date sticker in a readily visible location near the boarding

area (see A.7 of this Chapter).

FIGURE B4-1
SAMPLE WRITTEN NOTICE TO THE OWNER OF A SMALL PASSENGER VESSEL

[On OCMI's Official Letterhead]

[ADDRESS OF OWNER]

Dear Mr./Mrs./Ms./Sir:

I am writing to you in regard to the small passenger vessel (Vessel Name), Official Number (O.N.), for which our records indicate you are the owner. As you may know, the Coast Guard Certificate of Inspection for this vessel recently (expired/was suspended/revoked) on (Date) for the following reason(s): (Specify). For your own protection, this letter is to inform you of some of the less apparent aspects of small passenger vessel laws and regulations and to ensure that you are aware of certain requirements this situation presents for you.

First, the vessel may not be operated carrying more than six passengers until existing deficiencies are corrected and/or the vessel is inspected and re-certified for passenger service.

Second, if you should sell or transfer your vessel to a new owner, please inform the new owner of his or her obligation to obtain a valid Certificate of Inspection before employing the vessel in the carriage of more than six passengers. I ask that you also inform my Inspection Department, within 48 hours, of any change of ownership and provide the name and address of the new owner.

Finally, you should be aware that operating a vessel in an unseaworthy condition may constitute negligent use under Federal Law (Title 46, United States Code, Section 2302), and could subject you to civil or criminal penalties.

A copy of this letter has been placed in the vessel's file at this office (and a copy forwarded to the vessel's port of documentation). If you should have any questions, please do not hesitate to contact my Inspection Department at the telephone number listed above

Sincerely,

(Signature)
(Title)

5. Charters of Small Passenger Vessels

a. Demise or bareboat charters. The following guidance should be helpful in determining whether a vessel under a demise, or bareboat, charter is subject to inspection. Often, information received third parties must be verified before such a decision may be made. An effort should be made to discuss each case with the vessel owner to learn the details of the owner's operation, inform the owner of the requirements of a valid bareboat charter, or clarify Coast Guard enforcement policy, if necessary. OCMIs must refer all cases that cannot be clearly determined initially to the district commander and defer action pending the district commander's determination.

b. Background. The law that requires the inspection and certification of small commercial passenger-carrying vessels was enacted on May 10, 1956, by a Congress gravely concerned by several marine casualties involving loss of life on uninspected vessels that were carrying passengers for hire.

(1) Three of the most tragic of such incidents were the sinking of the motor vessels JACK and PELICAN off of Long Island, in separate incidents in 1951, and the loss of the sailing vessel LEVIN J. MARVEL in Chesapeake Bay in 1955. These casualties resulted in the combined loss of 70 lives.

(2) The legislative history of the Small Passenger Vessel Act of 1956 (now codified in 46 U.S.C.) reflects the will of a Congress determined to lessen the assumption of needless risks by private citizens who are carried aboard small passenger vessels.

c. Demise charter concept. The concept of bareboat, or demise, chartering of vessels has developed in admiralty law as a legitimate means of transferring the rights of ownership of a vessel to a charterer for a period of time.

(1) At the time of the drafting of the Small Passenger Vessel Safety Act of May 10, 1956, demise charters were seldom used by private firms, in favor of other more convenient and less risky charter agreements, such as the time charter. Demise charters were most often used by the Federal government as a device for acquiring necessary merchant vessel tonnage in times of war and emergency. During World War II, the government took over and operated, directly and through general agency agreements, many privately owned ships. Rather than condemn and pay for such a ship, the government would frequently take the vessel on demise from the private owner.

(2) Most bareboat charters were made for a period of time that exceeded a single voyage. Considering the motivating factors behind the Act and the way in which bareboat charters were commonly used at the time of its drafting, it is doubtful that the Congress intended to create a specific exemption from inspection for

private yachts being bareboat-chartered to carry large parties of passengers on pleasure cruises. This practice has, however, become fairly common in recent years, and has withstood most legal challenges when all of the requirements of a valid bareboat charter are complied with. Such a charter, although it may expose the charterer to considerably higher risk than the charterer would assume as a passenger aboard an inspected vessel, is a legitimate option the charterer may choose.

d. Enforcement. The Coast Guard's enforcement role in this specific area is limited to ensuring that bareboat charters meet the bareboat requirements.

(1) Some vessel owners are unaware or have been misinformed of the requirements for a valid bareboat charter. Many of these persons never ask the local Marine Safety Office (MSO) or Marine Inspection Office (MIO) what would be required to meet the small passenger vessel rules.

(2) Others attempt to create the appearance of a bareboat charter to avoid the perceived expenses and inconvenience of Coast Guard inspection when, in fact, the cost and inconvenience in many cases is considerably less than might be thought.

e. Evaluations of charters. The decision as to whether or not a valid bareboat charter exists is not a subjective one.

(1) The necessary conditions of bareboat charters have been fairly well standardized, with the most significant and difficult test being that of control. The owner must give up his or her vessel "pro hac vice" (for the occasion) as a complete demise, turning over the incidents of ownership to the charterer: this includes complete management, control, and operation.

(2) Some yacht owners are reluctant to give charterers such complete control. Nevertheless, failure to do so creates an invalid bareboat charter. Likewise, any payment of consideration by the guests of the charterer, either to the charterer or the owner, would result in the guests being considered passengers for the purpose of the inspection statutes.

(3) To determine accurately if a bareboat charter is valid, it is necessary to evaluate not just the terms of the agreement between the parties, but also the operation itself. In some cases, the vessel’s operation may not be in accordance with the agreement. In other cases, the charter may be fully in accordance with the agreement, which is itself faulty. For this reason, the evaluation process sometimes requires boarding a vessel while underway so that investigating officers may obtain first-hand information.

f. Elements of valid bareboat charters. The following provisions are indicative of a valid bareboat charter. Note that a valid bareboat charter does not necessarily require that all of these elements be present. Each arrangement must be evaluated on its own standing, according to the following:

(1) Although a master or crew may be furnished by the owner, full possession and control must be vested in the charterer (a provision requiring the charterer to be guided by the advice of the furnished master or crew, in regard to technical matters or navigation, is acceptable).

(2) The master and crew are paid by the charterer.

(3) All food, fuel, and stores are provided by the charterer.

(4) All port charges and pilotage fees are paid by the charterer.

(5) Insurance is obtained by the charterer, at least to the extent of covering liability not included in the owner's insurance. A greater indication of full control in the charterer is shown if all insurance is carried by the charterer (of course, the owner retains every right to protect his or her interest in the vessel).

(6) The charterer may discharge, for cause, the master or any crewmember without referral to the owner.

(7) The vessel is to be surveyed upon its delivery and return.

NOTE: Any provision that tends to show retention of possession and control (including basic navigation) by the owner or the owner's representative should be carefully examined to see if it contradicts the claim to have created a bareboat charter.

6. Cable Ferries

On 25 July 1922, the Acting Solicitor of the Department of Commerce rendered an opinion regarding a vessel operated as a double-ended ferry. The vessel had two drums aboard for endless cable that was rigged onshore at each side of the river; the vessel was thus pulled back and forth by machinery. This vessel was determined to be "propelled by machinery" and thus subject to inspection under 46 U.S.C. Chapter 33.

---

7. Railing Installations

a. Case history. The need for requirements for railing installations on T-boats was made clear to the Coast Guard by a particular casualty.

(1) The vessel involved was a 95-foot party fishing boat with 63 persons aboard. In a moderate sea, the vessel rolled to starboard and all passengers on that side of the vessel leaned or fell heavily upon the railing at the same time. The railing gave way and nine persons fell overboard. Fortunately, all were recovered and no injuries were sustained.

(2) The vessel had been inspected 7 months prior to the casualty. Subsequently (not as a requirement of the inspection), the owner replaced the aluminum railing sockets without the OCMI's knowledge or approval. The replacement sockets were not of a type accepted for marine use, and when installed and painted the material type was not readily discernible. The failure of these aluminum sockets was determined to be the primary cause of the casualty.

b. Inspection requirements. During inspection of a T-boat, the inspector must question the owner or the owner's representative as to any repairs that are anticipated or have been made.

(1) The requirement for such repairs or alterations to be made only with the OCMI's approval must be emphasized. All railings must be examined visually to identify defects or material problems and then given an appropriate test of their ability to withstand the cumulative load of persons who may rely upon it for support.

(2) Prior to the casualty cited above, moderate shaking of a railing installation had been regarded as sufficient, in the interest of avoiding costly, inspection-related repairs. However, this casualty demonstrated that railings may periodically be required to withstand a cumulative, instantaneous lateral force from a large number of people. Although a destructive test is not desired, the inspector must be satisfied that a similar casualty is not likely to occur.

---

8. Inspection of Shell Plate Butt Welds of Aluminum T-Boats

In 1996, during routine drydocking examinations of several aluminum T-boats constructed in a southern Louisiana shipyard, circa 1990, inspectors discovered that the edges of the shell plate at the joints had received no edge preparation (i.e, square butts). This lack of proper edge preparation precludes any chance for consistent full penetration welds to be achieved. The particular builder has constructed over 400 aluminum boats since 1969, many of which remain in current service with no known history of structural failure due to the poor welding detail. It is further believed that this is not restricted to this single builder but is probably commonplace in aluminum boats constructed by other U.S. yards on the Gulf Coast.

Due to the method of fit-up, welding and lack of back gouging, a lack of fusion line exists within the weld and is not readily apparent from visual inspection. Existence of this lack of fusion was confirmed by x-rays of the shell welds.

Prior to these discoveries, the Coast Guard did not widely discourage this type of fit-up and welding, although it was not generally deemed to be good marine practice. While not considered acceptable from a technical standpoint, it has nonetheless proven its serviceability over time. However, a recent review of this detail by Commandant (CG-ENG) personnel suggested that while it may not cause immediate catastrophic structural failure of the hull, the long term effects of fatigue, to which aluminum is particularly susceptible, may affect the long-term durability of the hull to resist inherent fracturing while in service or from some mechanical impact damage.

As previously mentioned, there is no readily apparent failure history which warrants a complete reweld of the hull solely because it was constructed with lack of attention to good marine practice. To preclude future occurrence of this problem, specific policy for shell plate welding in new construction has been established in Chapter A5 of this Manual. When considering the risk to existing aluminum vessels, the short interval longitudinal and transverse stiffening required by NVIC 11-80, plus their proven in-service record, and excellent durability, obviate the need for immediate drastic repairs.

To standardize inspection procedures and to minimize the potential for future failures, the following actions must apply to all aluminum T-boats in service, especially those fabricated in Gulf Coast shipyards.

a. All vessels must be subject to a mandatory, annual internal structural examination in conjunction with regularly scheduled inspections for the purpose of determining if butt and scam welds are being adversely affected by subsurface defects and discontinuities.

b. Careful attention must be paid to the condition of the longitudinal and transverse structural members and their weld attachments to the shell plate. Any fractures to these welds must be documented and repaired immediately.

c. The use of non-destructive testing, particularly X-rays, for the sole purpose of identifying lack of full penetration welds is discouraged.

d. Any subsurface discontinuity which results in an in service structural failure, or has been exposed by mechanical damage, must be gouged to good metal and rewelded in accordance with the procedures set forth in the American Bureau of Shipping (ABS) Rules for Building Aluminum Vessels (I 975), Chapter 30 Section 30.7 or Lloyd's Rules and Regulations for Classification of Yachts and Small Craft, Part 2, Chapter 3, dependent on the standard originally used to meet the structural design requirement of 46 CFR 177.300.

e. Surface discontinuities, such as porosity stemming from new construction, should be accepted as they are, unless it is determined that it is being caused by electrolytic corrosion.

f. A notation must be made in the MISLE data for each vessel to ensure that the annual examination requirement is followed. Additional MISLE entries must be made concerning the discovery of structural failures and their repairs.

---

9. Public Awareness

a. The general public is typically unaware of the Coast Guard's requirements for small passenger vessels. It is for this reason that an aggressive public information program is considered necessary, particularly in zones in which a large number of this type of vessel operates. A primary means of conveying information to the public is publication of a marine safety newsletter. An information package that can either be mailed out in response to telephone inquiries or handed out during personal visits from the public is another convenient method of distributing information.

b. Certification expiration date stickers. 46 CFR 176.01-45 requires T-boats to display certification expiration date stickers. This requirement is intended to increase public awareness of vessel inspection requirements and to encourage the public to favor T-boats that indicate that they meet those requirements. The inspector will provide stickers after the inspection for certification or at any time that the inspector determines them to be necessary to meet the intent of the regulations (the federal stock number for these is 7530-01-GF2-8620). The stickers are designed so that the expiration date of the COI can be punched in the date block at the bottom with a standard one-hole punch. Expired stickers and those on vessels whose COIs are

surrendered or revoked must be removed. OCMIs must provide hole punchers and scrapers to marine inspectors as needed.

B. EXCURSION VESSELS

1. Definition

An excursion vessel, as referred to in 46 CFR 2.01-45, 72.40-5 (c), and 46 CFR 176.204, is a passenger vessel that engages in short cruises for special events or recreational purposes. The operation of an excursion vessel is chiefly seasonal and normally involves the carriage of deck passengers.

2. Permit to Carry Excursion Party, CG-949

When such operation is not permitted under the vessel's normal COI, Permit to Carry Excursion Party, CG-949 may be issued under 46 CFR 71.10 or 46 CFR 176.204, as applicable. This is the case when a passenger vessel is permitted to carry additional passengers or to operate on an extended route, or when a cargo or miscellaneous vessel is permitted to carry recreation parties on a 1-day basis. The permit must be issued for a limited time, and must be considered a temporary supplement to the COI only. An excursion permit must not be used to circumvent inspection requirements.

3. Conditions of Permits

The OCMI must determine the maximum number of additional passengers that may be carried, the number and type of lifesaving appliances that must be provided, and the limitations of route, etc., for a vessel to engage in an excursion as provided in 46 U.S.C. 2113. Inspection of the vessel prior to issuance of Permit to Carry Excursion Party, Form CG-949 must be equivalent to reinspection of a passenger vessel. At this inspection, the inspector must pay particular attention to lifesaving and firefighting appliances. The applicable minimum stability and fire safety standards must not be waived or relaxed in any case.

4. Passenger Capacity

The number of passengers normally permitted on excursion vessels must be in accordance with 46 CFR 176.204. Other than stability and subdivision criteria, vessels inspected under 46 CFR Subchapter H (Passenger Vessels) have no specific limitations on the number of passengers permitted. To ensure a degree of uniformity in the application of the regulations, the criterion of one passenger for every 10 square feet of deck space must be used as a guide in determining the number of passengers permitted. Vessels that do not comply with structural fire protection requirements of 46 CFR 177.410 must not carry more than 150 passengers.

5. Operational Limits

The number of passengers and the route permitted for a vessel engaging on a temporary excursion must be limited to an operation that the OCMI believes can be safely undertaken. Careful consideration of possible downflooding (interior flooding of a vessel from the decks or over the gunwale) must be given in permitting an excursion route different from that which appears on the COI. Likewise, stability of the vessel must always be considered.

C. CARGO VESSELS

1. Carriage of Passengers (Persons in Addition to the Crew)

a. Requirements for notice to passengers. Under 46 U.S.C. 3304, the owner, charterer, managing operator, agent, master, or individual in charge of a cargo vessel must notify all passengers of the presence aboard of any dangerous articles, or of any other condition or circumstance that would constitute a risk of safety for the passengers or crew.

(1) This notification must be issued before the vessel sails. All persons other than members of the crew and military personnel carried (either under waiver or otherwise) must receive this notice.

(2) Failure to give such notice renders the owner, charterer, managing operator, agent, master, or individual in charge subject to a civil penalty of not more than $1,000, for which the vessel is liable in rem (see 46 U.S.C. 3318(h)).

b. Operation upon examination. A cargo or tank vessel must be examined to ensure that it complies with the laws and regulations relative to lifeboats, life preservers, and other lifesaving equipment before it may carry persons in addition to the crew. After a satisfactory examination, authority to carry up to 16 persons in addition to the crew on domestic voyages, and up to 12 persons in addition to the crew on international voyages, may be granted by issuing a COI amendment or by a special endorsement on the COI.

---

2. Subdivision

The 1966 Load Line Convention allows deeper drafts for those cargo vessels (other than tankers) that qualify as one or two compartment subdivision vessels. The determination and assignment of a load line is a function delegated to ABS. Therefore, when a deeper draft is allowed due to subdivision consideration, inspections for certification and reinspections must be conducted with the object of proper maintenance of bulkheads, closures, etc., essential to the preservation of the applicable subdivision criteria. For more information, see MSM Volume IV, Technical, COMDTINST M16000.9 (Series).

---

3. Equivalents Filed with the International Maritime Organization (IMO)

See Chapter E2 of this Manual.

---

4. Carriage of Combustible Liquids in Bulk Aboard Vessels

a. Vessels certificated as passenger, cargo, or miscellaneous vessels may carry limited quantities of flammable or combustible liquid cargo in bulk in accordance with 46 CFR 30.10-5, 70.05-30, and 90.05-35.

(1) These "limited quantities" must not exceed 20 percent of the vessel's deadweight tonnage, as applied to bulk liquid cargo or that carried in integral or independent tanks.

(2) The carriage of such cargo must not be the principal purpose or use of such vessels.

(3) The OCMI must determine, on a case by case basis, that the vessel's principal purpose is not the carriage of liquid bulk cargo.

b. Carriage aboard barges. Cargo barges certificated under 46 CFR Subchapter I may not carry flammable or combustible bulk liquid cargoes in any quantity.

(1) Barges carrying such cargoes must be considered tank barges and must meet the requirements of 46 CFR Subchapter D.

(2) 46 CFR Subchapter I barges may carry fuel for the use of their machinery and, when there is a need for additional fuel on occasional long voyages, fuel for the propelling vessel.

(a) This may be done only when a genuine need for the fuel exists and there is no attempt to circumvent the applicable admeasurement or safety regulations.

(b) 46 CFR Subchapter I barges should only carry fuel for their machinery for occasional long voyages. If additional fuel is needed on a regular route, a propelling vessel with sufficient fuel capacity of its own should be employed.

c. Discharge containment. When carrying oil, 46 CFR Subchapter I vessels with a capacity of 250 or more barrels must be in accordance with the cargo oil discharge containment requirements of 33 CFR 155.310. The requirements of 33 CFR Part 156 apply during transfer operations aboard such vessels, but 33 CFR Part 157 does not apply to vessels certificated solely under 46 CFR Subchapter I.

d. Carriage of unusable, bunker and/or oil residue on vessels permanently laid-up, dismantled, or out-of-commission. Bunker oil and bunker oil residue existing in such vessels (i.e., on board at the time the vessel was permanently laid up, dismantled, or placed out of commission and remaining on board) is not classed as cargo. The condition of the tanks must be acceptable to the OCMI. Additional oil or oil residue cannot be added to any bunker, cargo or independent tanks on a vessel permanently laid up, dismantled, or out of commission. For more details, see Chapter B1 of this Manual.

e. Carriage of fuel for the towing vessel on vessels permanently laid-up, dismantled, or out-of-commission. The carriage of fuel for the towing vessel on non-certificated vessels permanently laid up, dismantled, or out of commission being towed to scrap is not allowed. A vessel that carries fuel for the towing vessel would need to be inspected and certificated as a tank vessel and be issued the appropriate domestic and international certificates.

D. TANK VESSELS

1. Permanently Moored Tank Craft

A former tank vessel that is permanently moored at a fixed location to dispense, receive, or store flammable or combustible liquids in bulk may, at the request of the owner, be considered "substantially a land structure" subject to the waterfront facility regulations (33 CFR Parts 126, 154, and 156). To qualify under this terminology, the vessel must be securely and substantially such that it does not have a practical use for transportation on the water. As theses craft are frequently unattended, such mooring arrangements must be acceptable to the COTP posing no risk to the port, waterway and environment, and must be capable of withstanding wind, ice, and water conditions encountered at the location. Special consideration must also be given to extreme weather that may occur including but not limited to hurricane force winds, flooding, or high water as appropriate. To mitigate risk in some cases, it may be appropriate for COTP's to require an operator to have mooring arrangements reviewed by a Professional Engineer (PE). These craft may also be subject to ACOE requirements. See Paragraph I of this Chapter "Craft Routinely Operated Dockside" for additional guidance.

2. Tankships Carrying Grain Cargo

a. When a tankship is modified to carry grain in bulk, sounding pipes are fitted to each tank, the cargo stripping suctions are fitted with burlap-covered roseboxes and made to serve as bilge suctions, a nonreturn valve is installed at the stripping pump suction, the main cargo suctions are blanked off and cement-sealed burlap is installed at each bell mouth, the main cargo header in the pumproom is blanked off, and all cargo valves are closed and locked.

b. Study of the modifications needed for a tank vessel to carry grain in bulk in its cargo tanks indicates that, ordinarily, none of the essential features of a tankship are lost in the transformation. Returning the vessel to tanker service requires removal of blanks from the main cargo suctions and manifolds, removal of burlap and cement seals in the cargo tanks after discharge of the grain cargo, and cleaning out of the remnants.

c. Requirements for OCMI's evaluation. Upon inspection of a tank vessel that has been modified to carry grain in bulk, the OCMI must determine if the essential features that make the vessel eligible to carry flammable or combustible liquid cargo in bulk have been removed. If not, the COI need not be amended unless this is requested by the owner.

3. Tank Barges Not Carrying Flammable or Combustible Liquids

A barge that has been certificated to transport flammable or combustible Grade D and E liquids may retain its unexpired COI aboard when transporting nonflammable or

noncombustible liquid cargoes. Such a barge must comply with 46 CFR Subchapter D requirements at all times.

NOTE: Any changes to the vessel's equipment or construction required by the regulations for transporting other cargoes would automatically make the COI subject to withdrawal.

---

4. Metal Hoods and Housings

46 CFR 32.35-5 requires a metal hood or housing over pump engines on tank barges, to protect the pump engines against weather and damage during cargo or hose handling. Installations for which metal hoods or housings are unnecessary to provide the desired protection may be accepted provided the arrangement affords equivalent protection. Each tank barge pump engine installation should be evaluated on its own merits to determine whether installation of a metal hood or housing is necessary.

---

5. Refinery Waste, Dirty Ballast, Etc.

Barges used for the transportation of refinery waste, residual cargo, or dirty ballast from tank cleaning operations are subject to inspection and certification when they carry flammable or combustible liquids in bulk. The application of 46 U.S.C. 3710 et seq., to vessels other than public vessels is not contingent on the vessel's use in trade or commercial service, as long as the liquid is cargo or residue.

NOTE: When such barges are used to handle flammable or combustible liquids, even if diluted with water, fire and explosion hazards are present and the applicable safeguards contained in 46 CFR Subchapter D must be met.

---

6. Location of Flame Arresters

46 CFR 32.55-20(b)(4) states that "The vent header shall be fitted with a flame arrester or pressure-vacuum relief valve." This regulation applies to the venting of tanks transporting Grade A liquid on tankships constructed on or after 1 July 1951. This regulation does not require either the flame arrester or the pressure-vacuum relief valve to be installed at the outlet. Some vessels have a pressure-vacuum relief valve installed in the horizontal deck header, rather than installing this type of valve or a flame arrester at or near the outlet; the Commandant has accepted this arrangement. The required installation of a pressure-vacuum relief valve in the header is in addition to the pressure-vacuum relief valve in the individual branch vent line, which is not mandatory (see 46 CFR 32.55-20(b)(3)).

7. Carriage of Passengers

The provisions of C.1 above apply to tank vessels as well as to cargo vessels.

8. Unmanned Tank Barge Inspections and Examinations

a. Under 46 U.S.C. 3710, vessels that carry oil or any hazardous materials in bulk as cargo or in residue must be inspected or examined at least once annually. To satisfy these requirements, the Commandant's policy for the inspection of unmanned tank barges is that these vessels must have--

   (1) Biennial inspections for certification; and

   (2) Annual examinations occurring between the 10th and 14th month after the issue date of the COI.

b. The biennial inspections for certification must be conducted by qualified marine inspectors.

c. For unmanned tank barges that are certificated for the carriage of bulk dangerous cargoes under 46 CFR Part 151, annual examinations (formerly called "midperiods") must be conducted by qualified marine inspectors.

d. For unmanned petroleum tank barges not certificated for the carriage of bulk dangerous cargoes, annual examinations may be conducted by qualified marine inspectors or port safety boarding teams provided they are qualified to conduct these examinations.

c. Port safety boarding team guidelines. Port safety boarding teams will, in the course of routine monitoring or boardings, observe most of the items that should be inspected for an annual examination. In conducting an annual examination, a boarding team must include on its checklist of items to be examined--

   (1) An examination of all firefighting and safety equipment on the vessel; and

   (2) A visual inspection of accessible parts of the vessel. Particular attention must be paid to any obvious signs of damage, deterioration, or temporary repairs to the cargo piping, visible hull, flame screens, etc.

d. When a routine monitoring/boarding of an unmanned petroleum tank barge is scheduled between the 10th and 14th month after the COI is issued, the annual examination may also be conducted by the port safety boarding team.

(1) If no discrepancies are found, the boarding team should date and sign the COI. If discrepancies are discovered, they should be rectified per local OCMI guidelines.

(2) An entry should be made into MISLE noting the completion of the vessel's reinspection.

(3) See also COMDTINST 5010.8.

e. Local procedures. Commanding Officers (COs) of MSOs should establish local procedures as to when a port safety boarding team will be authorized to conduct an annual examination and endorse the COI on unmanned petroleum tank barges. Local monitoring/boarding checklists should also be modified or established as necessary.

---

9. Pressure Vessel Type Cargo Tanks

A review of the records of several tank barges over 20 years old that were certificated to carry liquefied gas in pressure vessel type cargo tanks has indicated that their tanks were never hydrostatically tested. Under 46 CFR 38.25-1(b), a hydrostatic test of such tanks may be conducted at any time that an inspector considers it necessary to determine their condition. When a tank barge 20 or more years old becomes due for internal examination, the cargo tanks should be very carefully examined and a hydrostatic test should be considered.

---

10. Trans-Alaska Pipeline Service (TAPS) Tankships

a. Background. The "Report of the TAPS Tanker Structural Failure Study" was published on 25 June 1990. The "TAPS Tanker Structural Failure Study Follow-up Report" was published in May 1991. Both reports addressed the reasons why TAPS tankers experienced a high number of structural failures compared to vessels in other trades.

(1) In order to combat these failures effectively, the principal recommendation of the TAPS study concerned the establishment of Critical Areas Inspection Plans (CAIPS) for all TAPS tankers. Specific guidance for CAIPs is contained in NVIC 15-91, NVIC 15-91, Change 1.

(2) Between June 1990 and June 1996, the Coast Guard, in partnership with TAPS operators and the ABS, conducted hundreds of CAIP examinations of TAPS vessels. While all TAPS vessels were subject to an annual examination of at least some portion of the cargo block, 16 vessels, 14 of which were in three distinct classes, were subject to more frequent examinations due to severe structural problems.

(3) These structural problems were a result of a number of factors, including, but not limited, to poor design details, poor construction practices, lack of adequate internal coatings systems, lack of maintenance, age, and harsh environmental conditions that stressed hulls and were exacerbated by various operating practices employed prior to the studies.

(4) As of June 1996, only six of these targeted vessels in the ATIGUN PASS 165,000 Deadweight Ton (DWT) class remain in existence. Only two of these vessels are currently in service. However, both operators of these vessels, BP America and SeaRiver Maritime, have been very effective in improving original design and construction details to the extent that the special six month interval between CAIPs originally imposed on these vessels is removed and the vessels may be examined under the 1-year CAIP interval provided for by NVIC 15-91. The vessels in this class are:

(a) S.S. ATIGUN PASS.

(b) S.S. THOMPSON PASS.

(c) S.S. BROOKS RANGE.

(d) S.S. KEYSTONE CANYON (downsized to 125,000 dwt in 1990).

(e) S.S. S-R BENICIA.

(f) S.S. S-R NORTH SLOPE.

b. Definitions.

(1) TAPS Tanker A means a vessel that transports oil in bulk from Valdez, Alaska to any U.S. or foreign port.

(2) Alaska North Slope (ANS) service is a U.S. Department of Commerce term for tankers carrying oil in bulk from Valdez, Alaska, to foreign ports. This definition is interchangeable with TAPS.

(3) Cargo block, as applicable to tankers and OBOS, means all cargo and ballast tanks between the forward most and after most transverse cargo bulkheads.

c. CAIP requirements for TAPS tankers. Commandant (CG-CVC) will maintain a MSIS VFSC for CAIP status of TAPS tankers. TAPS tankers must comply with CAIP requirements, as follows:

(1) Tankers new to TAPS service. All tankers initially entering the TAPS trade will be required to establish a CAIP for the full cargo block, per NVIC 15-91.

(a) Operators may apply to Commandant (CG-CVC) for alternative compliance with CAIP requirements, per NVIC 15-91, Change 1, 5.b.(2)(d) - (f), but will be subject to a baseline examination by the Traveling Inspectors (CG-5P-TI) prior to Commandant (CG-CVC) approval.

(b) The CAIP interval must be no longer than one year until a structural history can be developed by the Coast Guard. CAIPs may be performed within the 10th or 14th month following the previous CAIP survey.

(2) Existing TAPS Tankers. Tankers that have been in continuous TAPS service are normally subject to annual CAIPS.

(a) However, operators may apply to Commandant (CG-CVC) for relief of certain CAIP requirements on a case by case basis, as outlined in NVIC 15-91, Change 1. This includes elimination of certain portions of the cargo block from a CAIP examination or extending CAIP intervals.

(b) Approval of these requests will be based primarily on review of the structural failure history which may show the lack of significant problems over time or past structural problems which have permanently been corrected.

(3) Tankers in and out of TAPS service. Circumstances may cause TAPS tanker operators to place vessels on other routes for extended periods of time. It is not mandatory to maintain the CAIP during such time periods. However, the vessel must complete a CAIP prior to return to TAPS service if the prescribed interval since the last CAIP has been exceeded.

(4) CAIPs vs. ABS Enhanced Survey Guidelines. NVIC 15-91, Change 1 permits TAPS operators to substitute ABS Enhanced Survey guidelines for CAIPs on a case by case basis.

(a) It has been determined that the Enhanced Survey 3 is equivalent to the CAIP requirements for those vessels that are approved for a normal two-in-5-year internal examination interval, which would correspond to the ABS Special Survey and Intermediate Survey requirements. However, the ABS Enhanced Survey requirements are not equivalent with a CAIP in scope and depth of annual examinations.

(b) Operators must affirm in writing to Commandant (CG-CVC) that the ABS Enhanced Survey requirements normally complied with at ABS Special Survey will be performed to satisfy annual CAIP requirements.

(5) TAPS tankers involved in export trade. In April 1996, the President signed an authorization allowing export of Alaskan oil to foreign markets.

(a) The authorization requires that exporters obtain a special permit from the Department of Commerce to engage in this trade. As a condition of obtaining the permit, the exporter must employ a tanker that is subject to an annual CAIP survey.

(b) Consequently, although NVIC 15-91, Change 1 provides a provision for operators to extend CAIP intervals, a separate rulemaking by the Department of Commerce will require those vessels employed in oil export service to undergo a mandatory annual CAIP.

(6) TAPS tankers enrolled in the Alternative Compliance Program (ACP). Tankers enrolled in the ACP may substitute ABS Enhanced Survey Guidelines for the CAIP examine provided that surveys are performed to the same extent required by the CAIP. For information about the ACP, see Chapter A5 of this Manual.

(7) Reports of structural failure. TAPS operators must report Class 1 and 2 structural failures in accordance with the procedures outlined in Chapter A5 of this Manual. Acceptance of Enhanced Survey requirements in lieu of CAIPs or enrollment of a vessel in ACP does not relieve an operator of reporting responsibility to the cognizant OCMI.

(8) Maintenance of records. A complete, up to date CAIP is required on each TAPS tanker and in the operator's office.

(a) A copy of the detailed survey report normally completed to append the vessel’s CAIP must be provided to the cognizant OCMI where the survey is performed or where repair work, if required, will be conducted.

(b) An executive summary highlighting the CAIP must be provided to Commandant (CG-CVC) or review and forwarding to the Traveling Inspectors for maintenance in the TAPS file. The executive summary should contain the same, but less detailed information, required by enclosure (4) of NVIC 15-91. It is expected that the CAIP update and the executive summary be completed and placed aboard the vessel and forwarded, respectively, within 60 days of the CAIP.

(c) The cognizant OCMI must ensure the vessel's MISLE files are updated to reflect the current CAIP.

d. TAPS repair guidance. The hierarchy of repairs described in this section is a guideline for repairs whether the fracture is found at the CAIP survey during routine operations.

(1) Class 1 structural failures. All such failures must be repaired prior to the vessel being permitted to return to service, in accordance with Chapter A5 of this

Manual. Operators are always required to submit a Report of Marine Accident, Injury or Death, CG-2692 whenever a Class 1 failure occurs or is found.

(2) Class 2 structural failures. These failures must be evaluated by the operator in concert with the cognizant OCMI and vessel's class society. Temporary repairs may be authorized. In some cases, if the failure has arrested itself or poses no further chance of propagation, the OCMI may authorize monitoring of the fracture with no repair until the next scheduled repair period. No CO-2692 "Ls required to be filed.

(3) Class 3 structural failures. Repair of Class 3 failures may be held in abeyance to the next regularly scheduled repair period at the discretion of the operator. Repair of a Class 3 failure may be deferred and monitored if the OCMI determines that the repair would actually create a bigger problem such as expanding the heat effected zone between the weldment and base metal and causing additional stresses to be concentrated into a design detail.

(4) The primary goal of the CAIP guidelines is to prevent reoccurrence of structural failures and not simply just to address the end result of the root cause of the problem. In order to ensure consistency between zones, it is imperative that OCMIs consider all past approved repair procedures which have been effective in service. It also is important that the root cause of any structural failure be determined or understood prior to approving a repair as either temporary or permanent."

(a) Temporary vs. permanent repairs. The terms "temporary" and "permanent" can have multiple meanings.

[1] For Class 1 structural failures, temporary repairs means emergency measures taken to allow a vessel to safely transit to a port or facility in order to effectively evaluate the failure and accomplish permanent repairs. A vessel must not be allowed to continue in service under the terms and conditions of its COI with only these temporary repairs, beyond the singular voyage to a discharge port and/or repair facility.

[2] For Class 2 and 3 structural repairs, temporary repairs means measures taken to prevent a structural failure from developing into a failure of the next highest class. Generally, such temporary measures are only intended to suffice until the next regularly scheduled repair period when permanent repairs can be effected. However, past history has shown that in many cases, these temporary measures have satisfactorily arrested the cause of the failures. At the request of the operator, the OCMI should evaluate the temporary repairs' effectiveness and may accept them as permanent, if warranted. In such cases, a Vessel/Facility Inspection Requierments, CG-

835 noting the temporary repair and requiring a subsequent permanent repair may simply be written off as completed, accordingly.

(b) For all three classes of failure, permanent repairs should not necessarily be construed as repairs in kind. Structural failures resulting from a poor design detail will recur if that detail is restored as original. Much of the success realized to date in curtailing numbers of TAPS structural failures has resulted from improving design details. However, unless it is ascertained that a certain repetitive type fracture could reach critical proportions, it is acceptable to permit repair by traditional means such as veeing and welding. It should be recognized that structural repairs could be an iterative process, that is, that several permanent repairs may be proposed and accepted before a modification is successful in preventing recurring fractures.

(5) Repair guidance. Guidance on previously approved repairs can be obtained from numerous sources, including, but not limited to the following:

(a) The vessel's CAIP;

(b) Traveling Inspectors (CG-5P-TI) files;

(c) Classification society files; or

(d) The "Guidance Manual for the Inspection and Condition Assessment of Tanker Structures" published by the international Chamber of Shipping.

E. SEAGOING BARGES

1. Introduction

46 U.S.C.3302(m) provides that a seagoing barge is not subject to inspection if the vessel is unmanned and does not carry-

(1) a hazardous material as cargo; or

(2) a flammable or combustible liquid, including oil, in bulk

In this case, “in bulk” means a capacity of 250 barrels or more. Additionally, “hazardous material” as cargo includes flammable/combustible liquids or substances (see 46 USC 2101(14)).

Any barges that transit beyond the Boundary Line and are either 79 feet or longer (if built on/after 1 Jan 1988), or 150 GT or more (if built before that date) must have a valid Load Line Certificate (refer to 46 CFR Part 7 for delineation of the Boundary Line). A certificated barge is subject to inspection requirements until the COI is surrendered or expired, even though it may be operated for part of the time in inland waters.

2. General Inspection Provisions

a. Operation on the high seas. Only those vessels which are manned or carry hazardous materials, as noted in 1, above, are required to be inspected and certificated.

b. Plan approval. Complete plan approval is required for all vessels contracted for on and after 1 January 1964; plans must be submitted in accordance with 46 CFR 91.55.

c. Acceptance of alternate arrangements. The basic inspection requirements for these vessels are contained in 46 CFR Subchapter I. It is the Commandant's policy that the OCMI construe the intent of the regulations liberally, while ensuring that the vessel can be navigated safely. Any unusual condition or feature of the vessel that is

accepted by the OCMI at the initial or subsequent inspections must be made a matter of record so that it will not be questioned at a later date.

d. Load lines. Barges over 79 feet in length that transit beyond established boundaries must have load lines. If a load line assignment is not required, draft limitations may be imposed as a prerequisite to obtaining a COI when the OCMI judges such limitations to be necessary for the safety of life and property. See 46 CFR Subchapter E and, MSM Volume IV, Technical, COMDINST M16000.9 (Series) for load line requirements.

NOTE: Revisions to the statutory language governing loadline requirements in 46 U.S.C. 5102 have eliminated the exemption opportunity that vessels previously received from the wording in 46 CFR 42.03-5(b)(v). This revision makes load lines mandatory for all vessels which transit beyond the boundary line, including vessels conducting round-trip domestic "coastwise" voyages without visiting another U.S. port—so called "voyages to nowhere." Until the regulations in Title 46 CFR are revised, this is the Coast Guard enforcement policy on load line requirements for vessels transiting beyond the boundary line, regardless of whether the vessel visits another port during that voyage.

e. Lifesaving equipment. The requirements of 46 CFR Part 94 apply when seagoing barges are manned, whether the manning is required or permitted. The regulations permitting substitution of inflatable life rafts may be applied. Barges that do not sail more than 20 miles from a harbor of refuge and return to that harbor may be equipped with lifefloats or buoyant apparatus in lieu of lifeboats or inflatable life rafts.

(1) Manning requirements. Certain barges may be unmanned if so authorized by the OCMI. However, if a crew is required by the OCMI--

(a) 75 percent of the crew must be citizens of the United States if the barge is documented and whenever departing a port of the United States (see 46 U.S.C. 8103);

(b) 65 percent of the deck department, exclusive of licensed personnel, must be able seamen as defined in 46 U.S.C. 8702 (This may be reduced to 50 percent on vessels permitted to have a two-watch system.);

(c) On barges over 100 GT, all crewmembers must possess a Merchant Mariner's Document (MMD); and

(d) The watch system applies.

(2) Permitted manning. When the OCMI does not require the presence of a crew, one may be permitted, provided that--

(a) Persons carried as maintenance persons must have no duties connected with navigation. A sample endorsement that may be used on the COI is:

"Certificated without a navigating crew. The vessel may carry one person as maintenance person and operator of the dumping mechanism, with no duties connected with the navigation of the vessel."

(b) 75 percent of the personnel of the "permitted" crew are U.S. citizens, if the barge is documented and whenever departing a port of the United States (see 46 U.S.C. 8103); and

(c) On barges over 100 GT, all crewmembers possess an MMD.

---

3. Wooden Barges

Particular attention should be given to the inspection of seagoing wooden barges. If such a vessel is not in drydock at the time of its inspection, a thorough examination of the structure must be made, insofar as possible. To this end, the ceiling may be lifted for examination of the framing as the marine inspector deems necessary. Should doubt as to the soundness of the structure remain, the vessel should be drydocked for further examination.

---

4. Non-Self- Propelled Harbor Dredges and Barges; Change Places of Employment

a. Non-self-propelled harbor dredges and barges of 100 GT or more, when voyaging on the high seas to change places of employment, are subject to inspection and certification. 46 CFR 91.01-10(c) provides for a limited or short-term certificate, by which the vessel may be operated manned or unmanned. In those cases when the vessel is manned, the intent is to require a more thorough inspection than if it were unmanned.

b. Plan approval. Plan approval is not required for the certification of such vessels.

c. Inspections. The basic requirements for inspection of such vessels are contained in 46 CFR Subchapter I. It is the Commandant's policy that OCMIs apply the regulations liberally, bearing in mind the overall responsibility to ensure that vessels can be navigated safely.

d. Load lines. When such vessels are not required to have a load line, the inspector must ensure that there are adequate closures to maintain watertight integrity for the

duration of the voyage. Draft limitations may be imposed as a prerequisite to obtaining a COI if the OCMI judges them to be necessary for the safety of life and property. Non-self-propelled dredges may carry spare parts for their own machinery without having them considered as cargo, if the OCMI judges the quantity and weight of such spare parts to be reasonable. See MSM Volume IV, Technical, COMDINST M16000.9 (Series).

e. Lifesaving equipment. When vessels are manned, whether manning is required or permitted, the requirements of 46 CFR Part 94 apply. Substitution of inflatable life rafts may be permitted.

f. Boilers. Some such vessels are equipped with boilers. If the boilers are going to be used during the voyage, they must be given such operating tests and examinations as the OCMI deems necessary to ensure their proper functioning throughout the voyage. When these boilers will not be used during any part of the voyage, they do not need to be inspected. Any unsafe or unsatisfactory conditions must be made a matter of record and the owner of the vessel so advised in writing by the OCMI.

g. Wiring. Only the electrical wiring that will be energized during any part of the voyage is subject to inspection. Any unsafe or unsatisfactory condition detected must be made a matter of record and the owner of the vessel so advised in writing by the OCMI.

h. Drydocking: domestic and foreign voyage vessels.

(1) Foreign voyage. A drydock examination of the underwater hull and outboard fittings of such vessels is a prerequisite to issuance of a COI, unless there is a record of a satisfactory drydock examination within the preceding 18 months.

(2) Domestic voyage. The OCMI will normally require a drydock examination unless there is acceptable evidence presented of a satisfactory drydock examination within the past 3 years.

i. Manning: required and permitted.

(1) Required manning. Such vessels may be towed unmanned if authorized by the OCMI. However, if a crew is required by the OCMI--

(a) 75 percent of the crew must be citizens of the United States, if the vessel is documented and whenever departing a port of the United States (see 46 U.S.C. 8103);

(b) 65 percent of the deck department, exclusive of licensed personnel, must be able seamen (for seagoing barges);

(c) On vessels over 100 GT, all crewmembers must possess an MMD; and

(d) The watch system applies (on voyages up to 600 miles only a two-watch system is necessary).

(2) Permitted manning. When the OCMI does not require a crew on such vessels, one may be permitted, provided that--

(a) Persons carried as maintenance persons have no duties connected with navigation. A sample endorsement that may be used on the COI is:

"Certificated without a navigating crew. The vessel may carry persons as maintenance persons with no duties connected with the navigation of the vessel."

(b) 75 percent of the personnel of this "permitted" crew are U.S. citizens, if the vessel is documented and whenever departing a port of the United States (see 46 U.S.C. 8103); and

(c) On vessels over 100 GT, all crewmembers possess an MMD.

---

5. Barges Operated on Sheltered Waters of British Columbia

The sheltered waters of British Columbia were defined in a U.S.-Canadian treaty of 26 July 1934 as:

"The waters of Puget Sound, the waters lying between Vancouver Island and the mainland, and east of a line from a point one nautical mile west of the city limits of Port Angeles in the State of Washington to Race Rocks on Vancouver Island, and of a line from Hope Island, British Columbia, to Cape Calvert, Calvert Island, British Columbia, the waters east of a line from Cape Calvert to Duke Point on Duke Island, and the waters north of Duke Island and

east of Prince of Wales Island, Baranof Island and Chicagof Island, the waters of Peril, Neva and Olga Straits to Sitka, and the waters east of a line from Port Althorp on Chicagof Island to Cape Spencer, Alaska...." Barges of 100 GT and more making voyages on sheltered waters of British Columbia should not be inspected as seagoing barges.

---

6. Towing of Vessels to be Scrapped

See Chapter B1 of this Manual.

---

7. Ship Hulls used as Seagoing Barges

Ship hulls operated under the U.S. flag as seagoing barges to deliver cargo and scrap to foreign countries are subject to the following minimal requirements:

a. The vessel must comply with the regulations governing cargo stowage and securing arrangements. Approval of these arrangements by the National Cargo Bureau, Inc. (NCB) may be accepted as prima facie evidence of compliance.

b. A load line is required.

c. Inspection is required (including a drydock examination if necessary), followed by certification as a seagoing barge.

d. Should the vessel be manned, the following manning and equipment requirements are applicable:

(1) The vessel must be manned by a master and at least six mariners;

(2) Sufficient primary lifesaving equipment for all persons on board is required. A lifeboat (carried in such a manner that it may be readily launched) or life raft is acceptable;

(3) Means for pumping bilges and discharging normal amounts of bilge water must be provided;

(4) Provision should be made to supply electric power, when applicable to loads covered by 46 CFR 112.15; and

(5) Sufficient firefighting equipment should be provided to cope with any fire that may be anticipated during the voyage.

NOTE: For operations under a foreign flag, the vessel must possess a valid Load Line Certificate. Requirements other than these must be imposed by the vessel's home administration or insurance underwriters, etc., not by the Coast Guard.

---

8. Inland Tank Barge Pressure Vacuum (PV) Valve Requirement (46 CFR 39.20-11)

46 CFR 39.20-11 requires that cargo tank Pressure vacuum (PV) valves be set not lower than 1 psig and 0.5 psig on the vacuum side. Some inland tank barge cargo tanks are not structurally designed for pressures and vacuums. During Vapor Control System (VCS) plan review, these barges were approved by the Coast Guard with PV valves set below those required by 46 CFR Part 39, to protect the structure of the barge.

a. The lower PV valve settings have resulted in problems at some facilities attempting to conduct VCS operations with these barges.

(1) Such problems range from very slow transfer rates to the inability to conduct transfer. Provided that transfer procedures are followed, these are operational, not safety issues, since the tank venting system still serves to protect the cargo tanks from over/under pressurization during VCS operations. Vessel operators may continue to operate with these PV valve settings if they so desire.

(2) However, if the owner/operator decides to upgrade the pressure settings or if the barge is displaying obvious signs of over-pressurization, then additional plan review or approvals may be necessary.

b. The Marine Safety Center (MSC) will enter PV valve settings in the MISLE database (Vessel File Cargo Systems product set) for all future planned reviews of VCS. OCMIs must make these entries when they are not made by MSC and verify the PV valve is approved for the set pressures during routine scheduled inspections.

F. MOBILE OFFSHORE DRILLING UNITS (MODUS)

1. Introduction

MODUs are inspected and certificated under 46 CFR Subchapter I-A, which requires an inspection for certification every 2 years and a reinspection between the 10th and 14th month after issuance of the certificate. MODUs operating on the U.S. Outer Continental Shelf (OCS) are required to have annual onsite inspections in accordance with the OCS Lands Act Amendments of 1978 (43 U.S.C. 1331, et seq). Self-propelled MODUs of 500 or more GT engaged in international voyages are subject to the requirements of SOLAS 74/78. These units have the option of compliance with SOLAS or with the IMO MODU Code. U.S. flag MODUs are subject to Coast Guard inspection requirements any time the vessel is operating (46 U.S.C. 3311). Therefore, unless "laid-up," a U.S. flag MODU must be in compliance with its COI regardless of its location or whether floating or bottom bearing. Consequently,

regardless of the vessel's location, mode of operation, or types of international certificates, a U.S. flag MODU will receive an inspection or reinspection annually.

---

2. IMO MODU Code

a. On 26 July 1982, the Commandant advised the Secretary General of the IMO that the United States accepted the organization's MODU Code as equivalent to the requirements of SOLAS 74/78 for such vessels. As noted above, MODUs may comply with SOLAS or with the terms of the IMO MODU code. In addition, there will be a number of MODUs not subject to SOLAS for which IMO Code certificates are desired. Revision of 46 CFR Subchapter I-A has been initiated by Commandant (CG-543). One of the stated objectives of the regulatory workplan is to dovetail Subchapter I-A with the IMO MODU Code.

b. Administration. Upon request of the vessel owner, U.S. MODUs should be inspected to verify compliance with the IMO MODU Code. It is anticipated that such inspections will be conducted in conjunction with inspections for certification.

(1) Should a conflict exist between the IMO MODU Code and the provisions of 46 CFR Subchapter I-A, the owner must either request an exemption under paragraph 1.4 of the IMO MODU code or the Coast Guard must determine equivalency under paragraph 1.5 of the IMO MODU code.

(2) Upon satisfactory completion of the inspection, a MODU Safety Certificate, CG-5334 must be issued to the vessel. The certificate should be dated to expire 2 years from the date of the inspection.

---

3. U.S. Flag MODUs Operating in Foreign Waters

a. Full compliance with the U.S. regulations may be difficult for MODUs operating in foreign waters and subject to coastal state requirements. When another country's requirements conflict with U.S. requirements, U.S. Coast Guard regulations must take precedence unless an exception is specifically authorized by the cognizant OCMI.

b. 46 CFR 111.105 requires explosion-proof and intrinsically safe systems to be "listed by Underwriters Laboratories, Inc., Factory Mutual Research Corp. or other independent laboratory acceptable to the Commandant." Other laboratories that are acceptable are the Canadian Standards Association (CSA) and MET Testing Laboratory. However, requiring electrical equipment to be listed by these North American laboratories is not always reasonable in foreign waters because such equipment may not be available, or it may not meet coastal state equipment listing requirements. For subcontractor equipment or other temporary installations, other independent laboratories are acceptable for listing explosion-proof equipment and intrinsically safe systems.

(1) Subcontractor services. Drilling operations aboard MODUs often require subcontractor services. Subcontracted services include, among others, well logging, cementing, and casing perforation. Typically, these services are obtained

locally by the leaseholder without regard to vessel flag. Contractor electrical equipment usually meets the certification requirements of the coastal state, and not necessarily those of the vessel's home administration. These installations are considered temporary although they may be installed for a few days or a few years.

(2) Temporary installations. For temporary installations, equipment approved by an independent laboratory acceptable to the coastal state may be permitted by the OCMI in whose zone the vessel is operating.

(a) When the coastal state has no certification requirements, equipment must be listed by one of the North American laboratories previously indicated, by one of the agencies listed at the end of this subpart, or by another agency acceptable to Commandant (CG-ENG).

(b) In no case should equipment required by 46 CFR 111.105 to be listed, i.e., explosion-proof (flameproof) equipment or intrinsically safe systems, be permitted based on manufacturer or classification society certification. Upon return to U.S. waters and prior to engaging in OCS activities, MODUs must utilize equipment listed by one of the North American laboratories.

(c) Listed below are independent laboratories that are acceptable, provided they are recognized by the coastal state. This list is not intended to be all-inclusive; other laboratories acceptable to the coastal state may be permissible.

4. Recognized International Testing Laboratories

Country	Symbol	Organization
Belgium	INIEX	Institut Nationale des Industries Extractives
Denmark	DEMKO	Danmarks elektriske materielkontrol
France	LCIE	Laboratoire centrale des industries electriques
	CERCHAR	Centre d'Etudes Recherches des Charbonnages de France
Italy	CESI	Centro Elettrotecnico Sperimentale Italiano
Norway	NEMKO	Norges Elektriske Materiallkontroll
U.K.	BASEEFA	British Approvals Service for Electrical Equipment in Flammable Atmospheres
Germany	PTB	Physikalisch-Technische Bundesanstalt
	BVS	Berggewerkschaftliche Versuchsstrecke

G. DRILLING TENDERS

1. Introduction

Artificial islands and structures erected on the OCS to support the development of mineral resources may be regarded as "places in the United States" for purposes of the navigation and vessel inspection laws. Accordingly, a drilling tender that is moored to one of these artificial islands or structures may be considered to be "at a port or place in the U.S."

2. Inspection Procedures

a. Special agreements. Certain inspection agreements have been made with respect to drilling tenders engaged exclusively in providing power, machinery, and accommodations for material and personnel used in underwater drilling, mining, and related production operations. Such vessels are normally anchored for several months at a time at one location, and move only when proceeding to a new drilling site or a shipyard. Some of these vessels are self-propelled and others are not. They are all inspected and certificated under Subchapter I.

b. Drydocking. Requests received by an OCMI other than the OCMI who conducted the vessel’s last inspection for certification should not be granted until they are approved by the last certificating OCMI. Appropriate inspection of the vessel is a prerequisite

to granting an extension in all but the most unusual circumstances. Underscantling vessels such as Landing Ships, Tank (LSTs) should not be granted extensions.

c. Examinations of tailshafts and stern tube bearings. Due to their limited amount of time underway, drilling tenders need not have their tailshafts drawn for examination until the weardown exceeds the maximum permitted by 46 CFR 61.20-15. This should be handled on an individual basis, upon written request by the vessel owner. Extensions should be granted in writing, in a manner similar to an authorization to extend the drydocking interval. The vessel's COI must show the date when the tailshaft was last drawn, with a notation concerning the extension.

d. Additional requirements. The standards discussed above do not affect the prerogative of the OCMI to require drydocking or other inspection procedures at any time for cause. Copies of all owner requests and letters of authorization must be sent to Commandant (CG-CVC) and the last certificating OCMI.

3. Delivery of Excess Fuel to Drilling Platforms

Under 46 U.S.C. 3702(b), certain Offshore Supply Vessels (OSVs) are permitted to transfer fuel from their own fuel tanks to offshore drilling or production facilities without being inspected and certificated as tank vessels. Specifically, 46 U.S.C. Chapter 37 does not apply to a documented vessel under these circumstances provided that the vessel in question is not more than 500 GT, it is not a tanker, and it is in the service of oil exploration. A requirement for this exemption is that the person in charge of transfer operations must be a certified tankerman.

H. OCEANOGRAPHIC RESEARCH VESSELS (ORVS)

1. Introduction

Oceanographic Research Vessels (ORVs) must receive inspections for certification and reinspections in accordance with 46 CFR Subchapter U (Oceanographic Research Vessels). Classification as an ORV requires a determination by the Coast Guard. To arrive at such a determination, an analysis of the particulars of service, method of operation, and classes of persons carried should be conducted. For uninspected vessels claiming to be less than 300 GT, tonnage measurement may be a part of this analysis.

2. Accommodations

Accommodations for officers, crew, and scientific personnel must comply with the requirements of 46 CFR 190.20. However, members of deck and engine groups that stand watch at the same time may be quartered together. In addition, special consideration must be given to accommodations for scientific personnel carried on voyages of 14 days or less, provided the general intent of 46 CFR 190.20-5 is met. A space intended as a hospital space under the requirements of 46 CFR 190.20-35(a) may be used for ordinary berthing on voyages of 3 days or less.

---

3. Scientific Personnel

Scientific personnel are not classed as either "mariners" or as "members of the crew," but as "other persons" engaged on board for the purpose of conducting the business of the vessel. The carriage of scientific personnel must be indicated by separate endorsement on the COI and reflected in the "Total Persons Allowed."

---

4. Uninspected Vessels Used as ORVs

a. Letters of designation. Owners/operators of uninspected, seagoing motor vessels of less than 300 GT and any uninspected motor vessels operating on the Great Lakes that are intended to be operated as ORVs may request a Letter of Designation as an ORV under 46 U.S.C. 2101(18).

(1) After determining that such a vessel is employed exclusively in oceanographic research, the OCMI must issue a Letter of Designation valid for a period of 2 years (see Figure 10-2 for a sample letter). This letter designates the vessel as an ORV, and advises the owner/operator that the vessel must maintain exclusive employment in oceanographic/limnologic research or instruction and that any deviation from such exclusive use may constitute violations of the inspection statutes.

(2) In prior administrative rulings, the study of celestial navigation, seamanship, scuba diving, and other topics, in conjunction with oceanographic research or instruction, has voided a vessel's claim of exclusive employment. Additionally, a vessel documented as a pleasure vessel under 46 U.S.C. 12109 may not secure an ORV designation without surrendering its document, as the vessel would not be used exclusively for pleasure.

(3) OCMIs should not normally designate a vessel routinely carrying minor children as an ORV. Due to reduced safety requirements for ORVs, and the unique needs and capabilities of children, ORV designation is most often inconsistent with marine safety objectives for carriage of minor children. If confronted with a legacy vessel designation where the vessel routinely carries minor children, the COMI should consult with CG-CVC and CG-0941 staff prior to renewing the ORV designation.

b. Evaluation by the OCMI. It is the Commandant's policy that the vessel should be able to retain its designation under 46 CFR 3.10-5, even though the terms of its charter or specific oceanographic work may vary periodically. However, if a change of employment or operating conditions deviates from exclusive oceanographic research/limnologic activities, the owner/operator or master must advise the OCMI who granted the designation.

(1) Taking into account the particulars of the case, the OCMI must determine the eligibility of the vessel to retain its ORV designation based on its new employment/operations.

(2) If the vessel is not eligible to retain its ORV designation, it may be subject to inspection under (for example) 46 CFR Subchapter T or I. A formerly designated vessel, upon returning to bona fide oceanographic/limnologic activities, may be considered for a new ORV designation.

(3) If all operating conditions are as originally accepted, the information given for the initial request need not be resubmitted. The issuing OCMI and Commandant (CG-CVC) must retain copies of the Letter of Designation.

c. Research operations not under a Letter of Designation. An uninspected seagoing motor vessel of less than 300 GT or an uninspected motor vessel of any size operating on the Great Lakes that does not possess a Letter of Designation may engage in oceanographic research operations, provided that such use does not violate applicable manning and inspection requirements.

(1) Such a vessel must not be considered an ORV for purposes of 46 CFR Parts 3, 14, 24, and 188-189. Furthermore, scientific personnel who serve in any capacity aboard an undesignated vessel of at least 100 GT require MMDs as members of the crew.

(2) Carriage of students would be considered carriage of passengers, which would compel inspection, depending on the size of the vessel and the number of students/passengers carried. The designation procedure is, however, purely voluntary in nature and needed only where equitable relief from otherwise applicable inspection or shipment and discharge requirements is desired.

d. Appeals of evaluation. An adverse decision of an OCMI regarding any Letter of Designation request may be appealed to the district commander and to Commandant (CG-CVC), according to the procedures outlined in 46 CFR 2.01-70.

FIGURE B4-2

SAMPLE LETTER OF DESIGNATION FOR AN

OCEANOGRAPHIC RESEARCH VESSEL

(On Official OCMI's Letterhead)

[Date]

Name of Vessel Owner/Operator]
[Address]
Subj: Letter of Designation as an Oceanographic Research Vessel,
[Name of Vessel and O.N.]

Dear Sir:

In accordance with the provisions of Title 46, United States Code, 2101 (18), the [Vessel Name and O.N.] is hereby designated an oceanographic research vessel. This designation shall remain in effect until [Date 2 Years From Date of Letter], provided the vessel does not change employment or deviate from engaging exclusively in oceanographic research operations. Any such changes or deviations may constitute violations of inspection laws and must be reported to this office by the master, owner, or agent of the vessel. A determination will then be made regarding the vessel's eligibility to retain this designation.

A request for renewal of this designation should be made by [date, 60 days prior to expiration]. This letter shall be maintained on board the vessel.

Sincerely,

[Signature]
[Title]

Copy: Commandant (CG-CVC)
CCGDX(m)

5. Public Vessels

Public (e.g., U.S. Navy and National Oceanic and Atmospheric Administration (NOAA)) vessels as defined in 46 U.S.C. 2101(24) operated for oceanographic research are not required to be inspected and certificated by the Coast Guard. However, such vessels may be inspected and certificated upon request by the parent agency and upon an interagency agreement to this effect. When public vessels are alternatively furnished a letter indicating some degree of compliance with the regulations, every effort should be made to obtain one compartment subdivision and damage stability calculations when only 100 percent lifeboatage is provided.

NOTE: Refer to Chapter B5 of this Manuaul; Inspection of Public Vessels.

I. CRAFT ROUTINELY OPERATED DOCKSIDE (C-ROD)

1. Purpose and Intent

a. The intent of this part is to give the COTPs/OCMIs guidance in determining if a Craft that is Routinely Operated Dockside (C-ROD) a vessel and subject to Inspection for Certification. Some examples of such C-RODs are showboats, theaters, hotels, gaming sites, restaurants, museums, attraction vessels, and business offices either self propelled or not.

b. This policy applies to any craft, including existing craft, that routinely operates dockside and does not usually get underway.

c. This policy does not apply to semi-submersible platforms, which are not listed as “vessels subject to inspection” under 46 U.S.C. 3301. Based on their work on the OCS, semi-submersible platforms are inspected under 43 U.S.C. 1333.

d. Nothing in this policy alters requirements for attraction vessels outlined in Section B of this Manual. While attraction vessels may be considered to be routinely operated dockside, they are still vessels.

e. OCMIs are not required to make any Vessel/PMC determinations unless an application for inspection is submitted to the OCMI by the craft operator and the OCMI has reason to believe the craft is or will not be a vessel.

2. Discussion

a. In 2005, the Supreme Court issued its decision in *Stewart* v. *Dutra Construction Company, Inc.*, 543 U.S. 481, 125 S.Ct. 1118 (2005). That case held that a dredge is a "vessel" under 1 U.S.C. 3. The Supreme Court decided that 1 U.S.C. 3 provides the defining criteria for determining what constitutes a vessel wherever the U.S.C. refers to "vessel" as a jurisdictional criterion. In determining whether a particular craft is also a vessel, the "question remains in all cases whether the watercraft's use 'as a means of transportation on water' is a practical possibility or merely a theoretical one." 543 U.S. at 496.

b. Prior to this Supreme Court decision, various circuit courts of appeal had applied different tests to determine whether a particular craft was a vessel, depending on statute and the individual facts of each case.

c. Historically, the Coast Guard attempted to apply the different tests so as to provide maximum flexibility in achieving the purpose of the particular statute being administered. After *Stewart* v. *Dutra Construction Company, Inc.*, it is clear that an OCMI must apply the single test of whether a craft is used, or is practically capable of being used, as a means of transportation on water.

   (1) *Stewart* v. *Dutra Construction Company, Inc.* implies that a "permanently moored vessel" is an oxymoron, since such a craft is neither used nor practically capable of being used as transportation on water, and therefore cannot be considered a vessel.

   (2) Only a vessel can be inspected by the Coast Guard under the authority of 46 U.S.C. 3301.

d. In order to conform to *Stewart* v. *Dutra Construction Company, Inc.*, an OCMI will only issue Certificates of Inspection to craft that routinely operate dockside and do not normally get underway if they also constitute "vessels" as defined in 1 U.S.C. 3 and interpreted in *Stewart* v. *Dutra Construction Company, Inc.*.

e. The Coast Guard published a Notice of Policy in the *Federal Register* on May 11, 2009 announcing this change. (FR Vol. 74 No. 89 page 21814; Docket No. USCG–2004–17674.)

3. Definitions

a. <u>Craft</u> means any artificial contrivance designed to float or operate on the water including "vessels" as defined below. Every vessel is a craft, but not every craft is a vessel.

b. <u>Craft Routinely Operated Dockside (C-ROD)</u> means a craft which engage in commercial operations at its moorings without getting underway. C-RODs include both permanently moored craft and vessels.

c. Permanently Moored Craft (PMC) means a craft of design and mooring arrangement such that they do not have a practical capability of being used as transportation on the water.

d. Vessel, as defined in 1 U.S.C. 3, includes every description of watercraft or other artificial contrivance used, or capable of being used, as a means of transportation on water.

---

4. Vessel or PMC Determination

a. If there is a question as to whether any specific craft is or will be a vessel as defined in 1 U.S.C. 3 and interpreted in *Stewart* v. *Dutra Construction Company, Inc.*, it is up to the cognizant OCMI to make such a determination.

b. If an owner or operator submits an Application for Inspection to the OCMI, the OCMI will evaluate the craft in accordance with this part and will advise the craft's owner or operator of this determination in writing, as well as any appeal rights should the owner or operator wish to contest the OCMI's determination.

c. In order to be inspected and certificated as a vessel by the Coast Guard, the craft owner or operator must demonstrate, to the OCMI's satisfaction, the craft's practical capability to operate as a means of transportation on water. When determining if a craft possesses this capability, OCMIs and vessel owners should consider the questions included in the non-exclusive list following this paragraph. This list should be considered under the totality of the circumstances presented in each instance:

(1) Is the craft surrounded by a cofferdam, land, or other structure, such that although floating, it is in a "moat" with no practical access to navigable water?

(2) Is the craft affixed to the shore by steel cables, I-beams, or pilings; or coupled with land based utility connections for power, water, sewage, and fuel?

(3) If the craft were operated in navigation, would it be thereby endangered because of its construction?

(4) What is the purpose, function, or mission of the craft?

(5) Can the craft get underway in less than 8 hours? If more than 8 hours are required, the OCMI will determine if the delay was attributable to factors outside the owner's or operator's control, in which case the delay may be overlooked.

c. "Getting underway" consists of operating in the navigation channel and conducting propulsion tests, steering tests, and drills including the launching of rescue boats, all to the satisfaction of the OCMI. This may occur at the time of inspection for certification or at least annually. Non-self propelled craft may get underway with the assistance of an appropriate towing vessel. A craft that cannot demonstrate its ability to get underway to the satisfaction of the OCMI will be deemed a land structure and will no longer be inspected for certification by the Coast Guard, except for temporary grandfathering of certain PMCs.

---

5. C-ROD Determined to be Vessels

a. C-ROD determined to be vessels by the OCMI must demonstrate their practical use as transportation on the water through compliance with Paragraph I.4.c of this Chapter.

b. Craft that have been determined to be vessels are subject to all applicable requirements, including Coast Guard inspection and certification requirements. Such craft must remain in compliance with approved plans at all times, even if they do not normally get underway but routinely engage in dockside operations.

c. The Coast Guard may grant authorized exceptions and equivalencies. For example, 46 CFR Part 199 allows an OCMI to conduct a safety assessment on passenger vessels over 100 tons by using risk based decision-making principles to allow departures from traditional lifesaving equipment requirements. Sliding scale manning tables have also been found acceptable.

---

6. C-ROD Determined to be PMCs

a. If a craft owner/operator submits an Application for Inspection to the OCMI and the OCMI determines a craft to be a PMC rather than a vessel, the OCMI must provide the owner/operator a letter stipulating this determination.

(1) The OCMI should provide a copy of this letter to appropriate authorities such as the fire marshal, building inspector, or other government agency that would have regulatory authority over the structure to ensure appropriate parties are aware to the Coast Guard determination.

(2) An example of such a letter is included at the end of this Part.

b. Craft built with the intent to be PMCs should comply with applicable local building codes or regulations specified by the local jurisdiction. The Coast Guard will not

provide inspection oversight to any craft that intends to operate as a PMC or that cannot demonstrate that it is or will be a vessel as described in this part.

---

7. Change of Status

a. If a vessel holding a COI changes its operations or configuration such that it may no longer be considered a vessel, the OCMI must take appropriate action to determine its vessel or PMC status under the provisions of this Part.

(1) If the OCMI determines that the craft in question is no longer a vessel, the OCMI will compel the surrender of the COI.

(2) Should an operator wish to convert a vessel to a PMC, he or she should advise the OCMI of this intent. The OCMI should be satisfied that the proposed operation and craft configuration are such that the craft is no longer considered to be a vessel in accordance with the guidance in this Part, ensure surrender of the COI, and document the action in MISLE. No further designation or official correspondence is required.

b. At the time this policy took effect in May 2009, some PMCs (non-vessels) possessed, and expected to be able to renew indefinitely, a Certificate of Inspection issued by the Coast Guard. As PMCs, they may be subject to State and local building codes or similar standards, which may be time-consuming and costly. Therefore, with the concurrence of the State having jurisdiction over the craft, the OCMI will continue to provide inspection services until 11 May 2011, provided that the PMC--

(1) Currently possesses a Coast Guard-issued Certificate of Inspection;

(2) Has been designed to Coast Guard regulations; and

(3) May not be acceptable for regulation immediately by the State having jurisdiction.

c. If the state or local government is able and willing to assume oversight of these craft, the OCMI should not delay in the transfer.

---

8. Local or State Authorities

Any craft that has been determined to not be a vessel is not subject to Coast Guard inspection law and regulation and becomes the jurisdiction of the state or local government. The craft must comply with either local building codes or applicable standards as stipulated by the appropriate state or local government entity.

---

9. Waterways Management

a. PMCs are considered to be structures on the water and must be permitted by the United States Army Corps of Engineers (USACE) as appropriate.

(1) The USACE has the sole authority to issue site permits.

(2) Per the Coast Guard/USACE Memorandum of Agreement in MSM Volume X, Interagency Agreements and Acronyms, COMDTINST M16000.15A (Series), the USACE will seek COTP input on new site permit applications and approvals at the earliest opportunity.

(3) The COTP may address concerns for navigation safety or other waterways management issues by providing comment to the USACE during the permitting process.

b. As PMCs are not vessels, the COTP cannot compel operators to undergo a formal risk assessment prior to placing the craft in its location or intended operation.

(1) COTPs should work closely with the cognizant USACE District Engineer to identify and mitigate navigation safety concerns. Mooring arrangements must be acceptable to the COTP; they must pose no risk to the port, waterway, or environment and must be capable of withstanding the location's wind, ice, and water conditions

(2) Special consideration must also be given to extreme weather that may occur, including, but not limited, to hurricane force winds, flooding, or high water as appropriate. To mitigate risk in some cases, it may be appropriate for COTPs to require an operator to have mooring arrangements reviewed by a Professional Engineer (PE).

c. If a vessel owner/operator wishes to change a craft's status to a PMC and the craft meets the criteria of this policy, the OCMI should notify the cognizant USACE District Engineer and advise the craft owner/operator to seek appropriate permits.

(1) If a craft is deemed to be a PMC in accordance with this policy, the OCMI must not delay such a determination or compel continued compliance with Coast Guard Inspection regulation regardless of whether or not a permit has been obtained from USACE.

(2) Permits are the responsibility of the owner/operator and are not tied to any determination by the OCMI or COTP.

d. The COTP may require lighting of the PMC under the provisions of 33 CFR Part 64.

---

10. Vessel Documentation

a. Craft that are determined not to be vessels are ineligible for vessel documentation. In situations where such a craft holds a valid Certification of Documentation (COD), that COD would become invalid because the craft no longer meets the requirements of 46 U.S.C. 12135. The owners would then be required to surrender the COD. The OCMI shall notify the National Vessel Documentation Center (NVDC) of any craft that holds a Certificate of Documentation and is determined no longer to be a vessel. The OCMI must also advise the craft operator of its ineligibility.

b. When the craft is the subject of an outstanding mortgage properly filed or recorded in accordance with 46 U.S.C. Chapter 121 and applicable regulations, the COD, but not the trade endorsement thereon, remains valid for certain purposes. The COD would remain valid for the purposes of 46 U.S.C. Chapter 313 and instruments filed or recorded before the date of invalidation, including the craft's current, preferred, mortgage and assignments or notices of claim of lien filed after that date. See 46 CFR 67.161.

c. If the craft owners plan to refinance or obtain additional financing, the new mortgage could not be recorded as outlined in 46 U.S.C. Chapter 313 and would not be able to enjoy the protections of preferred mortgage status under that chapter. The same is true for any mortgages the owners might plan to obtain in the future after the current mortgage has been satisfied, unless the craft is altered so that it is eligible to regain its status as a vessel.

11. MISLE Activity

Newly built craft that are not deemed vessels will not be entered into the MISLE database. Field units will change the MISLE status of any former vessels in MISLE that become permanently moored such that they no longer meet the definition of vessel to "DEACTIVATED." COIs will be removed from these craft and deactivated.

---

12. Correspondence

An example of a PMC determination letter is provided in the following page.
OCMIs should remember that such documentation is only necessary if the operator of the PMC has submitted an Application for Inspection. The purpose of this letter in such a case is

to document the fact that the owner/operator requested inspection as a vessel, but the Coast Guard determined it was a PMC.

Commandant (CG-CVC) does not intend OCMIs to issue negative vessel determinations for all PMCs.

U.S. Department of Homeland Security
United States Coast Guard

Commander
United States Coast Guard
Sector Hianisport

2100 Second Street, S.W.
Homeport, 12345
Staff Symbol:

Owner or Operator

16700

Dear Sir or Madam:

The Officer in Charge, Marine Inspection of Coast Guard Sector Homeport, USA, has determined that your craft NEVER SAIL, for which you submitted an Application for Inspection on January 1, 2010, is not a vessel as defined in 1 U.S.C. 3 due to its configuration, intended use, and mooring arrangement that prohibits it from a practical use as transportation on the water. Therefore, it is not subject to U. S. Coast Guard vessel inspection regulations and the Coast Guard cannot provide inspection oversight or issue a Certificate of Inspection. The craft is also ineligible for documentation as a vessel.
As the craft is considered to be substantially a land structure on the water, you will need to apply for an appropriate permit from the U. S. Army Corps of Engineers. You may also be required to comply with appropriate local building codes or other standards as may be stipulated by the state or local government.

If your craft's status changes such that it is placed into navigation or otherwise has a practical use for transportation on the water, you must then fully comply with all applicable vessel inspection laws and regulations. Such a change in status must be reported to this office or cognizant OCMI prior to any return to navigation so that an appropriate inspection may occur.

If you have any questions about this determination you may contact LCDR M. I. Inspector, Chief, Inspections Department at (123) 555-1234.

Sincerely,

J. A. SMITH
Captain, U. S. Coast Guard
Officer in Charge, Marine Inspection

COPY: COMMANDER (DP), COAST GUARD DISTRICT X
U. S. ARMY CORPS OF ENGINEERS, HOMEPORT, USA DISTRICT
NATIONAL VESSEL DOCUMENTATION CENTER
(APPLICABLE STATE OR LOCAL AGENCY)

J. BOY SCOUT VESSELS

1. Introduction

To assist local Boy Scout councils, chartering organizations, and leaders in complying with Coast Guard inspection regulations, the Boy Scouts of America's (BSA's) Exploring Division and the Coast Guard entered into formal agreement on 1 October 1979. Vessels associated with the BSA's Exploring Division are known as Sea Explorer vessels. Although the agreement principally addresses the Sea Explorer program, it applies equally to all vessels operated in the interests of the BSA. The Exploring Division intends that all Sea Explorer vessels, except pulling boats carrying no more than six passengers, will be inspected and certificated.

2. Inspection Procedures

a. Vessels inspected under 46 CFR Subchapter T. All Sea Explorer vessels under 100 GT that carry more than six Boy Scouts must be inspected and certificated under 46 CFR Subchapter T.

(1) These vessels are subject to inspection because the Boy Scouts carried are considered to be passengers, as defined in 46 U.S.C. 2101(21)(B).

(2) In the past, a strict interpretation of the law did not require inspection and certification of vessels over 65 feet in length used exclusively for Sea Explorer activities. However, to ensure maximum safety, it was BSA policy that all Sea Explorer vessels over 65 feet possess a valid COI when carrying more than six persons in addition to the crew. Therefore, Sea Explorer vessels over 65 feet in length are now required to be inspected and certificated (46 U.S.C. 3301). The section of the 1 October 1979 agreement with BSA that deals with these vessels will be revised to reflect that change.

b. Vessels inspected under agreement. Sea Explorer vessels of more than 100 GT are not required to be inspected under 46 U.S.C. 3301 et seq., because they do not meet the definition of passenger vessels. Sea Explorer vessels are inspected and certificated in accordance with the existing agreement with BSA. Such vessels may be inspected under the 46 CFR Subchapter T standards. When these standards are inadequate, the provisions of 46 CFR Subchapters F (Marine Engineering), H (Passenger Vessels), and J (Electrical Engineering) may be used.

NOTE: Seagoing motor vessels over 300 GT operated by the Sea Explorers are required to be inspected under 46 U.S.C. 3301 et seq.

c. Uninspected Sea Explorer vessels. Sea Explorers engaged in the rowing of pulling boats are not considered passengers. Therefore, pulling boats are not required to be inspected for certification.

(1) Likewise, boats of less than 100 GT carrying six or fewer Sea Explorers (in addition to the crew) do not require certification.

(2) All Sea Explorer vessels not inspected under 46 CFR Subchapter T must comply with the appropriate requirements of 46 CFR Subchapter C (Uninspected Vessels).

(3) Annual application for a Coast Guard Auxiliary Courtesy Motorboat Examination is encouraged.

d. Manning. Certificated Sea Explorer vessels, whether sail or machinery propelled, must not be operated without the minimum manning specified on the COI.

(1) The OCMI certificating the vessel must determine minimum manning requirements.

(2) The OCMI may tailor license examinations to cover minimum professional requirements only. The OCMI may restrict the licensee to a particular vessel or may permit Sea Explorers to be carried as crewmembers (deckhands) aboard any Sea Explorer vessel.

(3) The OCMI must consider the number of passengers carried, route, and general arrangement, in addition to the size of the vessel. The following guidelines are minimum requirements:

Vessel Type and Size	Required Manning
Sailing vessels < 26 feet	1 operator, 2 deckhands
Sailing vessels ≥26 feet	1 operator, 4 deckhands
Power vessels < 26 feet	1 operator, 1 deckhand
Power vessels ≥ 26 feet and larger	1 operator, 2 deckhands

NOTE: When a vessel is cruising for more than 12 hours of continuous operation, the preceding minimum crew guidelines must be doubled to provide two separate watches. Powered vessels without engine controls at the steering station require at least one additional crewmember to provide engine control.

---

3. Special Situations

46 CFR 175.540 provides that the OCMI may consider departures from specific requirements when special circumstances or arrangements so warrant.

---

4. Right to Appeal

46 CFR 1.03-20 provides for appeal of decisions or actions of the OCMI. In addition, district commanders may arrange for a method of informal dispute settlement for minor disagreements.

---

5. Assistance from Coast Guard Marine Inspectors

When vessels will be acquired for Sea Explorer use, a marine inspector from the appropriate marine safety unit should be invited by the National Sea Exploring Committee or the BSA regional office or local council to assist in the examination of the vessel. The inspector will be able to affirm the vessel's general suitability for the Sea Explorer program and indicate the requirements it must meet for certification.

---

6. Establishment of Agreements and Liaison

The BSA administrator of this agreement is the Director, National Sea Exploring Committee. All matters of national scope between the Coast Guard and Sea Explorers are resolved between the Commandant (or the Commandant's designee) and the National Sea Exploring Committee (or its designee). Liaison between BSA's regional officials and Coast Guard district commanders for the implementation of this agreement by local councils, chartered organizations, and Sea Explorer leaders is the responsibility of the regional director or the director's designee. Liaison responsibilities include resolution of disputes and recognition of significant local conditions.

K. CABLE-LAYING SHIPS

A cable-laying ship is subject to the requirements of 46 CFR Subchapter I. Regulation 3, Chapter I of SOLAS 74 and the 1978 Protocol to the convention do not refer to cable-laying ships or similar types concerning exemptions from SOLAS requirements. Therefore, such vessels, when documented, are subject to SOLAS 74/78 even though they cannot be categorized strictly as either passenger or cargo vessels. The Commandant will require the minimum arrangements that, considering the particular vessel's service and safety elements inherent in its design and construction, can be considered equivalent to the requirements of SOLAS 74/78. Suitable notice of equivalency must be given as provided by Regulation 5, Chapter I of SOLAS 74/78.

L. ELEVATOR VESSELS

The term elevator vessel, as used in 46 CFR 146.02-2(f)(5), means a harbor service vessel that services cargo vessels by loading and offloading bulk cargo, such as grain and ores, by means of elevator buckets. This type of vessel is classed with cable vessels, dredges, fireboats, icebreakers, pile drivers, pilot boats, and welding vessels (none of which carries freight for hire as a cargo ship) as miscellaneous vessels inspected and certificated under 46 CFR Subchapter I.

M. RECREATIONAL BOATS RENTED FROM LIVERIES

It is common for liveries to rent recreational boats, including those propelled by outboard motors, to persons unfamiliar with Federal safety requirements. In some cases, when a deposit is required by the livery for the return of lifesaving or other safety equipment, renters decline to accept the equipment and take the boats without it. As a result, everyone aboard is deprived of the protection such equipment provides. Under 46 U.S.C. 4311, responsibility is placed solely on the operator of a recreational vessel to ensure that the proper safety equipment is aboard.

Livery operators should advise their customers that failure to have the required equipment aboard a recreational vessel places the boat operator in violation of 33 CFR Part 175. Operators should be encouraged to have the proper safety equipment on board.

N. APPROVAL PROCEDURES FOR SPECIAL-TYPE CRAFT OR UNUSUAL DESIGNS

1. Introduction

The Coast Guard is occasionally requested to certificate vessels of unusual design, such as catamarans, hydrofoil surface effect ships, etc., or traditional types (such as sailing vessels and sailing auxiliaries) that incorporate innovative features requiring detailed evaluation. Such vessels may be referred to as “special-type craft.”

Experience in the operation of such craft may be very limited or totally lacking. Current regulations are based upon experiences with conventional craft, and may be unreasonable or inadequate when applied to unique or unusual designs; available engineering data may also have limited applicability. For these reasons, such craft should be certificated only upon careful evaluation of the proposed design(s) or feature(s).

2. Administration of Requests

When a request is received for certification of a special-type craft or an unusual design, pertinent plans, specifications, and design calculations must be forwarded to the MSC for evaluation and approval. Elements considered by the MSC to be beyond its capabilities or expertise, or which require important policy decisions, must be forwarded to Commandant (CG-CVC) for evaluation and approval. In any case, the overall degree of safety must not be less than the minimum attained by requirements applicable to conventional craft.

O. INTEGRATED TUG BARGES (ITBS)

See NVIC 2-81, "Coast Guard Guidance Regarding Integrated Tug Barge Combinations," and its Change-1.

P. OIL RECOVERY VESSELS

1. Introduction

Vessels built for the purpose of cleaning up spilled oil are of special interest to the Coast Guard. The building and deployment of these vessels should be encouraged. Oil recovery vessels present unique problems from a regulatory standpoint. Such vessels must be able to operate safely in areas where flammable vapors are present. They are designed to carry various grades of oil (usually mixed with water) as cargo for short periods of time, often in a potentially hazardous environment.

Oil recovery vessels are generally small vessels with minimal crews who may be required to operate far from port under poor weather conditions. The primary safety concern for oil recovery vessels is avoiding the ignition of flammable vapors from oil spilled on the water and collected oil stored aboard. The hazard from oil on the water surface may be mitigated by weather conditions and elapsed time prior to cleanup. Likewise, collected oil is usually mixed with water, posing a lesser vapor hazard than oil alone.

In short, the hazard from vapor ignition is variable and difficult to ascertain. One design approach is to require the vessel to have no ignition sources for operation in a hazardous environment. Practically, however, it is extremely difficult to construct and maintain a vessel totally void of ignition sources. These vessels should be considered to have potential ignition sources and should require the same operational restrictions as other vessels in spill areas.

2. Inspection Criteria

The following criteria must be applied to oil recovery vessels in plan review and certification:

a. A vessel with no onboard oil-holding capacity must only be inspected under 46 CFR Subchapter I if the gross tonnage or the means of propulsion so require. Otherwise, the vessel must be uninspected.

b. A vessel with an oil-holding capacity of less than or equal to 20 percent of the deadweight tonnage must be inspected under 46 CFR Subchapter I. Such amounts of oil must be considered as "limited quantities" under 46 CFR 30.01-5 and 90.05-35.

c. A vessel with a holding capacity greater than 20 percent of the deadweight tonnage must be inspected under 46 CFR Subchapter D (Tank Vessels).

d. When holding recovered oil, a vessel certificated under 46 CFR Subchapter I must meet the requirements of 46 CFR Subchapter D.

e. Enclosed machinery spaces must be provided with positive ventilation.

NOTE: For vessels under 100 GT, it may be appropriate to apply specific requirements of 46 CFR Subchapter T in lieu of comparable requirements under 46 CFR Subchapter F or J. Such application must be done on a case-by-case basis by the OCMI, depending upon the design specifics of the vessel.

---

3. Hazardous Location Equipment

The following comments regarding "hazardous location equipment" apply:

a. Electrical equipment installations should be kept to a minimum. Hydraulically-powered equipment should be used when available (e.g., hydraulically-powered cargo pumps).

b. Where electrical equipment is employed (switches, lights, solenoid valves, etc.), it must be one of the following types:

(1) Spark ignitionproof (Underwriters Laboratories, Inc. (UL) 1500).

(2) Explosion-proof (various).

(3) Intrinsically safe (UL 913).

NOTE: The UL listing spark ignitionproof (UL 1500) employs a standard that is based on part of the explosion-proof test. Those electrical devices that do not create sparks in normal operation (lights, solenoids, etc.) are inherently spark ignition proof and should obtain UL listing.

c. Enclosed machinery spaces must be ventilated at a rate of at least 20 changes of air per hour by fans designated as nonsparking under the provisions of either 46 CFR 110.15-1(b)(16) or Subparagraph K.3.b above.

d. Belt drives must use conducting belts, pulleys, and shafts to prevent the buildup of static electrical charges.

e. Machinery exhausts must be fitted with spark arrestors.

f. All exposed surfaces (machinery, light lenses, etc.) must be maintained at a temperature below 400°F. When these surfaces are normally accessible to personnel they must be maintained below 150°F for personnel protection.

g. Oil tank vents must be fitted with flame screens and must have a cross sectional area at least as large as the fill lines.

NOTE: Most oil recovery vessels are designed for use with Grades D and E liquids. If use with more flammable grades or with hazardous chemicals is desired, Commandant (CG-ENG) should be consulted. Vessels engaged in other service when not operating as oil recovery vessels must meet normal requirements for that service.

4. Endorsements on the COI

An oil recovery vessel's COI must state it is an oil recovery vessel. The endorsement for route should be as broad as possible, consistent with the considerations of seaworthiness. Oil recovery vessels may be expected to respond to pollution incidents at great distances from their home ports, often in open sea conditions. When engaged in recovery operations, they are normally in close proximity to other vessels, and a restricted route would be neither desirable nor necessary.

The COI will normally be endorsed for the recovery of a specific grade of oil, as is done with tank vessels. However, oil that is of a higher grade may have the reduced ignition potential of a lower grade after weathering. Therefore, the COI should include a statement such as, "Approved for the recovery of Grade and lower. Higher grades may be recovered, on a case-by-case basis, as determined by the OCMI/COTP after consideration of the special circumstances of each recovery operation." Such factors as temperature, wind velocity, and time since spillage must be considered in permitting the recovery of higher grades of oil.

Q. SMALL MECHANICALLY FASTENED SHALLOW WATER OIL SPILL RESPONSE VESSELS (OSRVS)

1. Introduction

A national response organization, the Marine Spill Response Corporation (MSRC) has developed and constructed small OSRVs for use in shallow water oil spill responses. These OSRVs are unique in that they are normally stored on land, capable of being trailered, launched, and outfitted at a spill site. The launching and outfitting includes joining two barges together to form a single stable OSRV of approximately 25 GT. Commandant (CG-CVC) has conducted conceptual review and the MSC has conducted plan and stability review of these OSRVs. Since the combined tonnage exceeds 15 GT, Commandant (CG-CVC) has determined that these OSRVs are subject to inspection for certification as small recovery vessels.

2. General Requirements

MVI Policy Letter No. 03-92 contains the inspection standards identified during the conceptual review for the MSRC OSRVs. Depending on whether the vessel is self-propelled or not, outfitting equipment may include life-saving, fire-fighting, cargo tank-venting, cargo-piping, navigation, bilge pump, propulsion-unit, crane, and hand rail equipment.

These OSRVs are subject to inspection as small recovery vessels, except machinery and electrical may meet the requirements for a skimming vessel. The bilge pump and fire fighting equipment may be portable (barge), or semi-portable (self-propelled).

Toilets and wash basins are not required, as long as a tending vessel provides this service. The MSRC OSRVs are limited to operations not more than 1 mile from land due to the structural integrity of the connection devices.

3. Inspection

OCMIs should satisfy themselves that MSRC OSRVs are fit for their intended service. These OSRVs are stored in groups of eight barges. Recognizing that the individual barges are interchangeable provides merit to not requiring all of the barges to be completely outfitted, unless differences are noted. As a minimum, the self-propelled unit should be outfitted and demonstrated. Required equipment and paperwork for all of the barges should be examined/inspected. MSRC has provided stenciled equipment boxes for self-propelled and non-self-propelled configurations, which will facilitate the inventory of the equipment. The amount of equipment provided should match the intended number and type of vessels. Since the barge sections are interchangeable, the lifesaving equipment may be stenciled in a generic fashion, to show it belongs to the group of vessels.

4. COI Endorsement

Figure B4-Q-1 below is offered as a standard COI endorsement for the MSRC shallow water OSRVs. The endorsements below are specific to the MSRC OSRVs. These endorsements serve as an example for other small, shallow water OSRVs that may operate in a similar fashion; however, endorsements must be modified based on each specific vessel/operation.

Figure B4.Q-1.

COASTWISE: NOT MORE THAN ONE (1) MILE FROM LAND
AUTHORIZED TO CARRY RECOVERED OILS OF GRADE "B" WITH A SPECIFIC GRAVITY OF 1.05 OR LOWER. THE MAXIMUM DRAFT IS 2 FEET 10 INCHES. VESSEL MAY NOT OPERATE IN A HAZARDOUS ATMOSPHERE. CONTINUOUS MONITORING MUST BE EMPLOYED ON MANNED VESSELS WHEN RESPONDING TO OIL SPILLS OF GRADE "B" & "C."
ONE (1) CERTIFIED TANKERMAN SHALL BE PROVIDED DURING ALL CARGO TRANSFER OPERATIONS.
PRIOR TO OPERATION AS AN OIL SPILL RECOVERY BARGE:
1. MUST BE OPERATED WHILE MECHANICALLY FASTENED TO A SINGLE VESSEL OF THE SAME DESIGN AND CONSTRUCTION.
2. PRESSURE-VACUUM VALVES AND RECOVERED OIL PIPING AND VALVES MUST BE INSTALLED.
3. CLEATS AND DECK FITTINGS MUST BE INSTALLED.
4. NAVIGATION LIGHTS MUST BE INSTALLED.
5. DURING ALL MANNED CARGO OPERATIONS, THE BARGE SHALL BE EQUIPPED WITH HAND RAILS, ONE RING BOUY WITH LIGHT AND LINE, ONE TYPE I PFD FOR EACH PERSON ON BOARD, A PORTABLE BILGE PUMP WITH SUITABLE SUCTION AND DISCHARGE HOSE AND TWO B-II PORTABLE FIRE EXTINGUISHERS MUST BE INSTALLED.
PRIOR TO OPERATION AS A SELF-PROPELLED VESSEL, THE FOLLOWING ADDITIONAL ITEMS MUST BE PROVIDED:
1. ONE PORTABLE COMBUSTIBLE GAS METER FOR MONITORING ATMOSPHERE OR TANK VAPOR CONCENTRATIONS.
2. IN LIEU OF TWO B-II PORTABLE FIRE EXTINGUISHERS; ONE B-V SEMI-PORTABLE AND ONE B-II PORTABLE FIRE EXTINGUISHER SHALL BE PROVIDED.
3. WHEN MANNED A SUITABLE TENDING VESSEL WITH ADEQUATE SANITARY FACILITIES MUST BE PROVIDED.
4. THE MAXIMUM DRAFT IS 2 FEET 8 INCHES WHEN OPERATING IN THE SELF-PROPELLED MODE.
5. THE CRANE IS TO BE OPERATED IN ACCORDANCE WITH THE CAPACITY CHARTS BEARING U.S. COAST GUARD MARINE SAFETY CENTER APPROVAL STAMP DATED 25 JULY 1994.
6. WHEN OPERATING AS A SELF-PROPELLED VESSEL, THE VESSEL MUST BE MANNED WITH ONE MASTER AND A DECKHAND; HOWEVER, WHEN OPERATING OVER 12 HOURS IN ANY 24 HOUR PERIOD AN ALTERNATE CREW MUST BE PROVIDED TO SERVE IN A TWO WATCH ROTATION.

5. Manning

The proposed manning for 12-hour operations of the self-propelled vessel was a licensed master and a deckhand. Due to the relatively small size of these vessels, the master may act as the person-in-charge of transfer while navigating the OSRV, provided the master does not have to participate in manual tasks associated with the transfer. The adequacy of the manning level should be demonstrated during the OSRV's trials and must be sufficient to comply with the work hour limits of 46 U.S.C. 8104 (n). Deviations from the proposed manning level should be forwarded to Commandant (CG-CVC) for final determination.

R. LANDING CRAFT-TYPE VESSELS

Landing craft used by the armed services in wartime are obviously designed for special purposes. They are of lighter construction than merchant ships, and the opening-bow design of most types presents structural integrity problems not found on conventional vessels. The Commandant strongly discourages the use of these vessels for commercial service. When landing craft are permitted to be used commercially, special consideration must be given to their suitability for the proposed operation. In some instances, the hull structure has been required to be strengthened before the vessel is certificated.

In all cases in which ex-landing craft have been permitted to carry passengers, and in most cases in which they are permitted to carry cargo, a requirement has been made for the permanent closure of bow doors. For those cargo carriers on which bow doors were retained, indiscriminate beaching has not been permitted and suitable shore facilities must be provided. OCMIs must continue to give particular attention to vessels of landing craft types. The construction, arrangement, equipage, and material condition of each particular vessel must be considered in determining its suitability for the proposed operation. Each new request for inspection of such a vessel must be evaluated on its own merits. Unless covered by the following provisions, each new request should be referred to Commandant (CG-CVC) with appropriate recommendations from the OCMI.

---

1. LSTs

NVIC 7-56 and NVIC 11-63 contain instructions concerning the structural reinforcement, drydocking, and hull inspection of manned and unmanned LSTs, respectively. Certain additional requirements have been developed since the issuance of these NVICs.
Hull bottom reinforcement, in addition to that shown in Figure 1 of NVIC 7-56, is required to provide at least 14 square inches of additional bottom plating sectional area on each side of the centerline. This may be provided by strapping, or by increasing the width of the 9/16-inch thick strakes at the centerline and in way of the longitudinal bulkheads.

Existing machinery, pressure vessels, piping systems, electrical installations, lifesaving and firefighting equipment, etc., that will not be used must be removed or inactivated. Any

original equipment or systems designed for use in the proposed service must comply with the applicable regulations.

Full detail plans of all modifications of the basic LST structure and configuration, including those called for in NVIC 7-56, NVIC 11-63, and this section, must be approved by the MSC before inspection for certification. These plans should be submitted well in advance of anticipated alterations or operations to permit adequate review and lead time for work.

---

2. Other Types of Craft

Landing Crafts, Utility (LCUs), Medium (LCMs), and Tank (LCTs) with bow doors in use have been permitted to carry cargo on waters considered to be semi-protected, provided that the following are true:

a. The OCMI is satisfied as to the material condition of the vessel and its degree of meeting equipment requirements.

b. Appropriate conditions and limitations, including the qualification of routes to reasonable operating conditions, are stated on the COI.

c. Provisions are made to waive reporting requirements in instances of routine intentional grounding. The following statement must be entered on the COI of a landing craft: "Notice of casualty in accordance with 46 CFR 4.051(A)(B)(C) shall be made for any accidental stranding or grounding and for any intentional grounding that causes, or is suspected of having caused, damage affecting the seaworthiness of the vessel."

d. The cargo capacity of such vessels must not exceed that prescribed by the following table:

VESSEL TYPE AND LENGTH	Protected Waters / No Beaching Waters	Semi-Protected Waters / Beaching
LCM (50, 56 ft.)	30 Tons (Short)	20 Tons
LCT (117, 120 ft.)150 Tons	100 Tons	

e. Cargo must be loaded low in the vessel, well within the side walls, and properly lashed and stowed. The use of cranes on board these vessels should not be permitted without stability calculations being submitted.

f. Bow and stern sections of LCTs must be welded to center sections.

---

3. DUKWs

These World War II-vintage amphibious craft are equipped with radiator-cooled engines. Departures from 46 CFR 182.420 (which prohibits radiator-cooled engines in vessels) are authorized due to the DUKWs unique arrangement, provided a temperature indicator and an alarm are installed (see Paragraph B.2.j above).

S. YACHTS

---

1. Application of Inspection Laws

Although normally operated as recreational vessels, yachts may be subject to inspection as seagoing motor or steam vessels, depending on the vessel size and area of operation.

---

2. Steam- Propelled Yachts

A "steam vessel" is defined under 46 U.S.C. 2101(37). Steam vessels are subject to inspection under 46 U.S.C. 3301. Steam-propelled yachts (recreational vessels) more than 65 feet overall in length are subject to inspection. Steam-propelled yachts more than 40 feet in length, but not more than 65 feet overall in length, only require inspection with respect to their boiler, engine, and other operating machinery, per 46 U.S.C. 3302(k).

---

3. Motor- Propelled Yachts

Motor-propelled yachts of at least 300 GT making voyages beyond the boundary line defined in 46 CFR Part 7 are, by definition, "seagoing motor vessels" subject to inspection under 46 U.S.C. 3301. Such vessels must be inspected under 46 CFR Subchapter I.

4. Manning Requirements

See MSM Volume III, Marine Industry Personnel, COMDTINST M16000.8B (Series).

T. FISHING AND FISHERY-RELATED VESSELS

1. Introduction

Fishing vessels, fish processing vessels, and fish tender vessels, as defined in 46 U.S.C. 2101(11)(a), (b), and (c), respectively, may be exempt from vessel inspection requirements and most manning standards by specific wording in 46 U.S.C. 3302(b), (c)(1) and (2), 3304(d), and 3702(c) and (d). Basically, size, propulsion, and service or use of a vessel determines whether or not it is subject to inspection and manning regulations.

2. Determination of Exemptions

Determining the applicability of exemptions from the various standards to all the different vessel types, fisheries, and locations can be difficult. Figure 10-3 provides a summary of the different requirements. This is intended to assist in decision making and is not necessarily all-inclusive. Questions should be directed to the District Commander (m) or Commandant (CG-CVC). For uninspected vessels to which manning standards apply, reasonable attempts should be made to verify compliance. Boardings of opportunity in conjunction with casualty and pollution investigations, Enforcement of Laws and Treaties (ELT) and Search and Rescue (SAR) assistance cases, etc., can be used to this end.

3. Reporting Requirements

Since the need for these vessel-specific exemptions and their impact on safety is periodically reviewed by the Congress, it is important that the Commandant has accurate information on the casualty records of exempted vessels. Whenever possible, casualty investigation reports should identify vessels known to be within these exemption categories. Likewise, any information obtained locally that is relevant to this issue should be forwarded to Commandant (CG-CVC).

---

4. Safety and Lifesaving Equipment on Fishing Vessels

All safety and lifesaving equipment in excess of that required by 46 CFR Part 28, whether an approved type or not, carried onboard any commercial fishing industry vessel must be--

a. Maintained and inspected as required by regulation and in compliance with the manufacturer's guidelines;

b. Distinctly and permanently marked as to be used only for training if it does not meet the maintenance and inspection standards; or

c. Removed from the vessel if it does not meet the maintenance and inspection standards.

NOTE: All excess safety or lifesaving equipment retained onboard a vessel for training purposes must be stowed in such a manner or location so that it will not be mistakenly used during an actual emergency.

---

5. Notes on the Statutes and Regulations Pertaining to Fishing and Fishery- Related Vessels

a. Fishing vessels, tenders, and processors exempted from inspection by 46 U.S.C. 3302 are not exempt from all manning requirements. See 46 U.S.C. 8103, 8104, 8301, 8701, and 8702. If the vessel has a COI, 46 U.S.C. 8101 applies. The implementing regulations are in 46 CFR Part 15.

b. The Officers' Competency Certificates Convention, 1936, is implemented by 46 U.S.C. 8304, and applies to vessels in this category that are of 200 or more GT. The implementing regulations are in 46 CFR 15

c. Fishing and fishery-related vessels of 100 GT or less are subject to 46 U.S.C. 8901. The implementing regulations are contained in 46 CFR Subchapter T.

d. Fishing and fishery-related vessels constructed before 1 January 1980, and vessels aboard which conversion for such use was begun before 1 January 1980 (and

completed prior to 1 January 1983) are not required to have a coastwise load line assigned. See 46 U.S.C. Chapters 51 and 141.

e. Fishing and fishery-related vessels constructed before 15 August 1974 or converted for such use before 1 January 1983 are not required to have a coastwise load line assigned. See 46 U.S.C. Chapters 51 and 141.

f. Fishing and fishery-related vessels engaged in foreign voyages or international voyages that are "new vessels" 79 or more feet in length, or "existing vessels" of 150 or more GT, are required to have a load line. See 46 U.S.C. Chapters 51 and 141.

g. Fishing and fish tender vessels of not more than 500 GT engaged in only the fishing industry are exempt from the requirements of 46 U.S.C. Chapter 37.

U. RIVER-RUNNING VESSELS

1. Introduction

The 1970s saw a tremendous national upsurge in commercial river-running activities, commonly referred to as white water rafting. This involves non-self-propelled boats (usually inflatable rafts), floating down streams marked by rapids of varying degrees of difficulty. These expeditions may last from several hours to several days. Expeditions on relatively calm waters offer novice adventurers the enjoyment of a wilderness journey, while rougher waters offer the thrill of "shooting the rapids." As some river-running operations carry passengers for hire on navigable waters of the United States, they fall within the purview of 46 U.S.C. Chapters 33, 41, or 42 and, consequently, the regulations in 46 CFR Subchapters C and T. As these regulations do not directly address river-running operations, a project was initiated to develop suitable regulations and a program for inspection and licensing.

NOTE: The only requirements that apply specifically to white water activities are: have Type I or Type V (Special Purpose) personal flotation devices for each person aboard, and conduct safety orientation for passengers.

2. Program Evaluation

After considerable study, the Coast Guard determined that a new regulatory program was unnecessary and inappropriate. White water rafting is generally a thrill-type, inherently risky activity in which participants willingly seek an exciting adventure. Nevertheless, the industry has a good safety record, attributable in part to regulation by Federal and state agencies (U.S. Department of the Interior, state boating safety administrators, etc.) and the guidance of rafting owner/operator trade associations. The occasional accidents that occur are not likely to be prevented by a Coast Guard inspection program. Further, because of the distances from most marine safety units to "wild river" areas, the Coast Guard would incur large increases in operating costs with little tangible improvement in safety. Therefore, inspection and licensing action will not be undertaken for commercial white water activities. Future efforts regarding these activities will be initiated to encourage the states (and, on Federally-owned lands, cognizant Federal agencies) to oversee white water activities.

---

3. Discretion of OCMIs

This policy does not abrogate Coast Guard authority over white water rafting. The OCMI should be aware of such activities in his or her zone, and should exercise jurisdiction if a specific problem demands corrective action at the local level. Inspection and licensing efforts should not be initiated without prior approval of Commandant (CG-CVC). Casualties involving loss of life should be investigated with possible recourse to civil penalty proceedings for negligent operation under 46 U.S.C. 2302.

V. OCEAN INCINERATION VESSELS

---

1. Introduction

With the advent of stricter environmental controls on the disposal of hazardous wastes, ocean incineration has become a topic of greatly increased interest. This, like land-based incineration, is a high-temperature combustion process; however, it is performed on special-purpose vessels. Wastes disposed of in this manner are organic compounds, usually chlorinated hydrocarbon wastes, that are difficult to destroy by other processes and that produce highly acidic combustive wastes. The burning process itself is conducted at specific ocean sites that have been designated by the Environmental Protection Agency (EPA). One site is presently located in the Gulf of Mexico; another has been proposed in the Atlantic Ocean. United States involvement in the ocean incineration concept began in the early 1970s, when the Singapore-registered vessel VULCANUS (renamed VULCANUS I) was employed to dispose of chlorinated hydrocarbon wastes for the Shell Oil Company. Since that time, VULCANUS I and now VULCANUS II have burned Polychlorinated Biphenyls (PCBs) and the herbicide 2,4,5-T ("Agent Orange").

---

2. Federal Controls

The EPA and the Maritime Administration (MARAD) established an interagency working group in which the Coast Guard participated. This group considered the environmental impacts of the ocean incineration process, its economic feasibility, possible government actions to encourage development of a U.S. incineration fleet, and presently applicable regulations. This group determined that the only government support for such development existed in MARAD construction loan guarantees. The EPA is responsible for incinerator efficiency, designations of burning sites, and enforcement of waste disposal requirements. The Coast Guard is responsible for approving the designs of such vessels, ensuring that they are maintained to acceptable standards, overseeing loading operations, and assisting the EPA in enforcement activities.

---

3. Coast Guard Enforcement Measures

A rider to the Fisheries Act Amendments of 1982, which became effective on 29 December 1982, places U.S. incineration activities under the protection of the Jones Act and restricts burning of U.S. wastes to U.S. vessels. Special exemptions have been given to the VULCANUS I and VULCANUS II; the latter, under Liberian registry, will operate principally from Mobile, Alabama. However, these vessels operate under COIs and are subject to drydock examinations and inspections to ensure their maintenance to the same standards as U.S. incinerator vessels. Coast Guard COTP personnel also monitor loading operations and assist in enforcement activities. Special inspection procedures may be required to ensure adequate protection for Coast Guard personnel. Commandant (CG-CVC) will provide specific guidance when the VULCANUS I and VULCANUS II are due to be inspected.

W. LAUNCHES AND LIFEBOAT USES

---

1. Passenger Vessels—Launches

Foreign flag vessels occasionally use their own launches or lifeboats to ferry passengers ashore. Such use of ship's boats to ferry passengers between a passenger vessel and shore constitutes the carriage of passengers for hire. Operations and manning, including licensed operators, must be in accordance with the regulations for passenger vessels.

Some foreign flag states issue Lifeboat/Tender Safety Equipment Certificates to lifeboats used as passenger launches. Although these are not SOLAS certificates, they certify that the boat meets an equivalent level of safety in view of its limited route and service. These launch

certificates are considered COIs issued by the flag state (see 46 U.S.C. 3303). Foreign flag launches with SOLAS Passenger Ship Safety Certificates or unexpired certificates of inspection issued by proper authority of its respective country are subject to Control Verification procedures. Launches without SOLAS certificates or unexpired certificates of inspection are subject to U.S. inspection and certification.

a. For foreign flag launches, a U.S.-issued COI should include appropriate limitations on the area of operation. In no case should the COI on a foreign flag launch authorize operation in areas outside of U.S. jurisdiction. At a minimum, the inspection should be sufficient to ensure that machinery and electrical installations are safe and appropriate and that lifesaving equipment adequate for the area of operation is provided. Drydock inspections can be completed with the boat in the davits.

b. For foreign launches, including foreign-built boats on U.S. registered vessels, the U.S. Customs Service has ruled that transport of passengers between a passenger vessel in U.S. territorial waters and a point on shore is not a violation of 46 App. U.S.C. 289, if the following conditions are met:

(1) The transporting boats arrive in the U.S. territorial waters on board the vessel.

(2) The boats are used solely to transport the passengers between the vessel and the shore.

(3) The District Director of Customs is satisfied that it is not safe or feasible for the vessel to berth at a pier.

(4) The boats depart U.S. territorial waters on board the vessel.

c. Foreign-built launches that meet the conditions of the Customs Service ruling would not be engaged in coastwise trade. The boats would, therefore, not have to be documented, even if carried on a U.S.-registered vessel. Depending upon state law, these boats might have to be numbered in the state of principal use, if they are not documented.

2. Passenger Vessels—Use of Lifeboats as Launches

All of the conditions for launches apply to lifeboats used as launches. In addition, such boats must meet all requirements for lifeboats. The boats may be used as passenger launches in and around the port in the vicinity of the vessel as long as the vessel is at anchor or at the dock. (However, note that most operations in U.S. waters with the vessel at the dock would constitute coastwise trade with attendant documentation issues.) When the vessel is at anchor, there must be enough lifeboats and davit-launched liferafts remaining on board or alongside to accommodate all persons remaining on board the vessel. The boats will be limited to launch service between the vessel and the shore at all times when there are passengers on the vessel.

a. For vessels with Coast Guard-approved lifeboats, certification for the boats should not prove difficult, since the construction regulations for lifeboats have many similarities to 46 CFR Subchapter T requirements, such as fire-retardant resins for Fiber-Reinforced Plastic (FRP) construction, fuel and electrical system installation, and others.

b. It is possible that the number of persons permitted on board the boats in launch service will be different from the lifeboat capacity due to differing freeboard and stability requirements and methods of determining capacity.

c. SOLAS Regulation III/19.2 (1983 SOLAS Amendments) states "Before the ship leaves port and at all times during the voyage, all lifesaving appliances shall be in working order and ready for immediate use." U.S. regulations for large passenger vessels require that the lifeboats and liferafts "be kept in good working order and available for immediate use at all times when the vessel is being navigated and, insofar as reasonable and practicable, while the vessel is not being navigated" (46 CFR 176.808). This means that the boats must be stowed and configured for immediate use as lifeboats when the vessel is underway, including removal of floorboards and any other extra equipment carried for launch use which might interfere with use as a lifeboat.

d. Requirements for buoyant apparatus or life floats can normally be waived for lifeboats used as launches, since lifeboats are equipped with lifelines and inherent flotation that prevent sinking. Lifejackets and ring life buoys of the appropriate number are required when the lifeboat is being used as a launch.

3. Cargo and Tank Vessel Launches

The situation for cargo and tank vessels is somewhat different. In some cases, these vessels are required to anchor offshore while awaiting cargo, berthing, stores, etc. The use of the ship's boats for transport of crew and stores between the vessel and the shore is acceptable. However, operation to or between different points on shore or to other vessels could constitute coastwise trade, and therefore involve issues of licensing and documentation.

X. SUBMERSIBLE VESSELS

A submersible vessel or "submersible" is a privately owned vessel capable of completely submerging that is designed for manned or unmanned independent operations underwater. Voluntary reports of submersible operations in or near U.S. waters may be made to the nearest Coast Guard Operations Center. Inquiries about the extent of such reports and other questions that cannot be resolved locally should be directed to Commandant (CG-CVC) at (202) 372-2075 These reports are intended primarily for informative use in SAR activities only.

---

1. Regulatory Oversight

a. General requirements. Presently, the Coast Guard does not have inspection standards applicable to the design or construction of submersible vessels. As a submersible's size, means of propulsion, nature of operation, and cargo carried (if any) approximates those on surface vessels, as regulated under Title 46,CFR, the appropriate standards will be applied to ensure a degree of safety equivalent to that obtained on surface vessels. For further information, refer to NVIC 5-93.

b. Application of 46 CFR Subchapter C. Generally, submersibles are subject to 46 CFR Subchapter C (Uninspected Vessels) requirements for lifesaving and firefighting equipment, display of navigation lights and use of signals, and control of hazards associated with gasoline engines. Some items covered in 46 CFR Subchapter C may not be applicable for use on small submersibles. Owners or operators of such craft may request the OCMI to accept equivalent equipment under 46 CFR 24.15.

c. Application of 33 CFR Subchapter S. Submersibles must also comply with certain provisions of 33 CFR Subchapter S (Boating Safety).

(1) Undocumented submersibles (i.e., those without Federal documentation or license) with propulsion equipment must be numbered in accordance with the Federal numbering system or the numbering system of the state in which the submersible will principally operate.

(2) When a submersible is involved in a collision, accident, or casualty, the operator must report such occurrences to the appropriate OCMI or state authorities, and render all possible assistance to others involved in such incidents.

(3) 33 CFR Part 155 (Oil or Hazardous Material Pollution Prevention Regulations for Vessels) and 33 CFR Part159 (Marine Sanitation Devices) also apply to submersibles.

---

2. Recreational Submersibles and Those Carrying Six or Fewer Passengers

These vessels are included within the meaning of the term "recreational vessel" in 46 U.S.C. 2101(25) and "uninspected passenger vessel" in 46 U.S.C. 2101(42). Accordingly, operators of such vessels are subject to the requirements of 46 U.S.C. Chapter 43 and 33 CFR Subchapter S, as well as the regulations indicated above. Recreational submersibles and those carrying six or fewer passengers are therefore subject to the following:

a. All submersibles carrying six or fewer passengers for hire must be operated by a person licensed by the Coast Guard as an Operator of Uninspected Passenger Vessels.

b. 46 U.S.C. 4310 and 33 CFR Part 179 require the manufacturer of a submersible to notify the first purchaser of any defects and to correct them.

c. Under 33 CFR Part 181, the manufacturer must affix a Hull Identification Number (HIN) to the submersible. This requirement applies to "backyard builders" as well as industrial firms. Upon written request from a manufacturer (or importer), Commandant (CG-BSX) will assign a Manufacturer Identification Code (MIC) which is a required part of the HIN. Persons who build or import boats for their own use and not for sale must obtain the required HIN from the State Boating Law Administrator of the state where the boat will be principally used, or from the Coast Guard district office in the area.

d. In addition, 46 U.S.C. 4302 authorizes the Coast Guard to prescribe safety standards for the design and performance of submersibles. These are published in 33 CFR Subchapter S. Prospective manufacturers of submersibles should be encouraged to contact the Auxiliary, Boating and Consumer Affairs Division, Commandant (CG-BSX), to determine which 33 CFR Subchapter S requirements will apply to their craft.

Y. PASSENGER CARRYING VESSELS

1. Passenger Vessels (PVs)

46 U.S.C. 2101(22) defines a PV as a vessel of at least 100 GT carrying more than 12 passengers, including at least one passenger for hire or a vessel that is chartered and carrying more than 12 passengers. Employees of the owner of a PV who are on board and not engaged in the business of the vessel are passengers.

2. Uninspected Passenger Vessels (UPVs) and Small Passenger Vessels (SPVs)

The statutory definitions for UPVs and SPVs do not contain the "for hire" requirement.

The definition of passenger is the test for whether compliance with the vessel inspection and manning regulations is required. When employees are on board an employer's PV or UPV, they are passengers by definition unless they are the master or a crewmember engaged in the business of the "vessel." An example of this might be a boat owned by a boating magazine covering an event on the water. The master and crew of the vessel would not be considered passengers for either a UPV or SPV. However, a company advertising salesman on board a UPV to take notes on prospective clients would not be considered crew engaged in direct business of the vessel and would be a passenger. With an SPV, this same salesman is engaged in the business of the vessel owner and, by extension, is not a passenger. If the vessel in question is operated on a legal bareboat charter and is carrying only employees who are not considered passengers under 46 U.S.C. 2101(21), then they are not engaged in coastwise trade and documentation is not required.

3. Passenger Vessel Investigations

Pending definitive legislative resolution, enforcement personnel must continue investigations and boardings of passenger vessels as current procedures specify (except in situations where more specific guidance pertaining to particular vessels dictates otherwise). Any vessel documents and/or charter agreements that appear to be in proper order when reviewed during boardings should be accepted at face value. The following courses of conduct should be observed in specific situations:

a. If the condition of the documents and the circumstances of the voyage give the boarding officer no reason to doubt the validity of a purported bareboat charter party, a valid charter agreement shall be assumed to exist. For the purposes of any further safety inspection, the vessel will be considered to be within 46 U.S.C. 41 or 43 as appropriate.

b. If a bareboat charter party appears to be valid, but the circumstances nevertheless

give

the boarding officer some reason to doubt its validity, no further immediate inquiry into the nature of the agreement will be undertaken.

(1) In these circumstances, however, guest lists, pertinent legal documents, and the names and addresses of owners, operators, or persons-in-charge may be gathered during the boarding for later follow-up investigation ashore.

(2) Any further safety inspection during the boarding must be conducted in accordance with the assumption that the documents are valid, i.e., the vessel will be considered within 46 U.S.C. 41 or 43, as applicable.

c. If a purported bareboat charter party is obviously invalid, then the inspection must proceed as if no bareboat charter party exists.

d. The voyage of any vessel determined to be unsafe under the assumptions described above should be terminated in accordance with applicable guidelines.

---

4. Acceptance of the International Code of Safety for High-Speed Craft (HSC code) as equivalent to meeting Title 46, Code of Federal Regulations (CFR), subchapter H or subchapter I

a. On January 10, 1996, the Coast Guard published a final rule that amended the small passenger vessel regulations under 46 CFR, Subchapter T and created a new class of small passenger vessel under 46 CFR, Subchapter K. Among the many changes to these regulations, the Coast Guard included a provision that accepts the HSC Code as an equivalent to meeting the requirements of Subchapters T and K. Specifically, under 46 CFR 114.540 (Subchapter K) and 46 CFR 175.540 (Subchapter T): *The Commandant may accept compliance by a high speed craft with the provisions of the International Maritime Organization (IMO) "Code of Safety for High-Speed Craft" as an equivalent to compliance with applicable requirements of this subchapter.* Although this "blanket" equivalency provision exists for small passenger vessels of less than 100 gross tons, no such regulatory provision exists for passenger vessels of 100 gross tons or more, where 46 CFR, Subchapter H would apply. However, under the general equivalency provision of Subchapter H, as given by Subpart 70.15, the Commandant has, on an individual basis, accepted the use of the HSC Code as equivalent to meeting the requirements of Subchapter H. These individual equivalency determinations were based upon the Coast Guard's judgment that the HSC Code provides for a level of safety equivalent to that of Subchapter H.

b. Although to date the Coast Guard has not received any individual requests to accept the use of the HSC Code as an equivalent to Subchapter I for a high-speed cargo vessel, the same rationale used for accepting its equivalence to Subchapter H should apply. The HSC Code is considered an appropriate standard for regulating the safety of any high-speed craft, regardless of vessel service. In fact, any vessel constructed on or after 1 January 1996 that engages in international voyages and that meets the definition of "high-speed craft", is given the option to comply with the HSC Code in lieu of SOLAS regulations. Since the equivalency provisions of Subchapter I, as given by 46 CFR, Subpart 90.1 5, mirror that of Subchapter H, it is appropriate to extend this blanket equivalency for the HSC Code to Subchapter I vessels as well.

c. By announcing the Coast Guard's decision to accept the HSC Code as equivalent to meeting Subchapter H or I, the need for processing a separate equivalency determination for each individual vessel is eliminated. This blanket equivalency will allow the prospective builder and owner/operator of a high-speed craft to design, construct, outfit, and operate a high-speed craft in accordance with the HSC Code in lieu of meeting the requirements of Subchapter H or I. This ruling, however, is contingent upon the HSC Code being applied and complied with in its entirety. Also, it must be clearly understood that this equivalency determination is limited to the commercial vessel safety requirements of 46 CFR, Subchapter H and I. The requirements of other applicable federal regulations, beyond these subchapters, must still be met. This would include the miscellaneous requirements prescribed by 46 CFR, Subchapter A, the manning and licensing requirements of 46 CFR, Subchapter B, and the safety management, pollution prevention, and navigation safety regulations under Title 33 CFR.

d. This guidance is limited to high-speed craft that would otherwise be subject to inspection under 46 CFR, Subchapter H or Subchapter I. Specifically, this applies to a high speed passenger vessel of 100 gross tons or more, or a high-speed freight vessel of more than 15 gross tons. Further, for the purposes of this section, the definition of high-speed craft will be identical to that given by the HSC Code, i.e.: (A *high-speed* craft is a vessel capable of a maximum speed, in meters per second (m/s), equal to or exceeding: $3.7 X \nabla$ (to the 0.1667 power); where ∇ equals displacement corresponding to the design waterline (m3)).

e. Officers-in-Charge, Marine Inspection (OCMIs) shall accept the use of the HSC Code as an equivalent to meeting Subchapters H or I, subject to the conditions discussed above. When submitting application for inspection and/or vessel plans to the OCMI or to the Coast Guard Marine Safety Center, vessel representatives should communicate their intention to apply the HSC Code in accordance with the terms under this section.

Z. OIL/BULK ORE (OBO) VESSELS

1. Class Problems

OBO vessels are vessels that originally carried grain and ore cargoes and were then converted to oil carriers. The handling of grain and ore cargoes requires the use of clamshell buckets and draglines, as well as other types of shovel equipment that is dropped into the cargo holds. The bulk cargo is also moved around inside the holds with overhead unloaders and bulldozers. The use of this heavy machinery to handle these types of cargo causes damage to the cargo hold boundaries. When these vessels enter into the liquid cargo trade, there may be many leaks into the void spaces surrounding the converted cargo tanks. This presents an explosion and fire hazard if the void spaces are not properly cleaned or inerted.

2. Inspection Procedures

Although OBO vessels identified as having leakage problems are primarily Swedish built, all vessels of this configuration should be considered to have the potential of leakage into void spaces. The following actions should be taken to minimize the potential for leakage risk:

a. During each required boarding of an OBO carrying flammable or combustible liquid cargoes, and more frequently if deemed appropriate by the OCMI, voids should be sounded for leakage and/or otherwise checked to ensure that they are clean and free of vapors. If cargo is found in a void space, then that space must either be cleaned and gas-freed or inerted to the satisfaction of the OCMI.

b. Some vessels have inerting systems connected to void spaces, which require extra attention. These spaces should be checked for oxygen (O_2) content. If the O_2 content is above allowable limits, the inerting system should be brought on line and the O_2 level reduced, unless it can be shown that there is no leakage of cargo into the void spaces.

3. Notification of Cargo Leakage

When leakage of cargo into a void space is found, the OCMI should take whatever action he or she deems appropriate to ensure that transfer operations can be conducted safely. Notification should be made to the vessel's master and owner or operator that the vessel will not be allowed to return to the United States until all leaks have been repaired. The vessel's classification society should also be notified of the defects. A Special Inspection Note

should be entered into the vessel's MISLE file (see MSM Volume I, Administration and Management, COMDTINST M16000.6 (series), Chapter A3).

AA. DRACONES

The Coast Guard has concluded that it would be unrealistic to apply inspection standards to dracones. Dracones are essentially employed as emergency response equipment, much the same as skimmers and containment booms. Although dracones may technically be considered vessels when deployed, their construction, operational limitations, and mode of employment make application of the inspection statutes inappropriate. It is recommended that contractors using dracones for temporary storage or transfer of product periodically examine them in accordance with manufacturer's instructions. Otherwise, there are no applicable servicing or examination criteria.

BB. UNDOCUMENTED VESSELS

1. Authority for Numbering of Undocumented Vessels

Under 46 U.S.C. 12302, the Secretary of the Department of Transportation (SECDOT) has the authority to establish a Federal standard vessels numbering system, and to approve state numbering systems which are in accordance with this Federal numbering system. The Federal system is outlined in 33 CFR Part 173; provisions for state number systems are found in 33 CFR Part 174. Most states have met the basic intent of the Federal standard system and their numbering systems have been approved accordingly.

NOTE: In 1985, only two jurisdictions lacked numbering systems that complied with the Federal standard: Alaska and New Hampshire. The numbering of all boats registered in these states that operate on waters under the jurisdiction of the United States is accomplished by Marine Safety Office (MSO) Juneau, for Alaska, and the First Coast Guard District (CCGD1), for New Hampshire.

2. Comparing Federal and State Numbering

Approved state numbering systems meet the basic intent of the Federal standards under 33 CFR Parts 173 and 174, and they number all undocumented vessels equipped with propulsion machinery of any type. There are slight differences between the standard system and individual state systems. For example, Rhode Island registrations expire every 2 years, instead of the 3 years allowed by the standard system; in other states, the registration expires annually. Approximately one-quarter of the states require numbering of vessels other than those propelled by machinery only. Validation stickers, required for those vessels numbered by the Coast Guard, are optional under state numbering systems.

3. Numbering Undocumented Vessels

The procedures for Federal and state systems for numbering undocumented vessels are similar. For a new number issue, the vessel owner forwards an Application for a Certificate of Number, plus a registration fee, to the appropriate numbering authority. Upon receipt of the application and fee, the numbering authority will usually issue a temporary Certificate of Number. The permanent certificate and validation decal(s), if required, will be forwarded at a later date. The validation decals are distinctively colored to indicate the year the number expires (see 33 CFR Part 173). Once approved, a state numbering system is in full effect and exemptions granted by the state are recognized by the Coast Guard. For example, North Carolina's approved system exempts boats powered by electric motors. Although an electrically propelled boat is required by Federal regulations to be numbered, the North Carolina law is controlling, and the Coast Guard will not act against the operator of such a boat in that state.

NOTE: 46 U.S.C. 12302(f) states that the SECDOT may withdraw approval if the state system is not consistent with the Federal system.

4. Offenses Related to Numbering of Undocumented Vessels

In states that have an approved numbering system, enforcement of the numbering regulations will be deferred to the state authority. Enforcement of numbering regulations is done in the course of enforcement of all federal boating laws and regulations. A Boarding Report (CG-4100) must be forwarded to the district commander for appropriate civil penalty action.

5. Numbering of Certificated but Undocumented Vessels

a. Certificated, undocumented vessels. Classes of vessels are required to have a COI, but, due to the nature of their employment, the route upon which they operate, their size, or interagency understandings, are not required to be state or Federally numbered. These include, but are not limited to the following:

(1) Public vessels, public school ships, and civilian manned vessels of the Military Sealift Command (MSC), U.S. Navy, or the U.S. Army Corps of Engineers (USACE).

(2) Barges, sailing vessels, and inland motor vessels carrying flammable or combustible cargo in bulk, or dangerous cargo.

(3) Vessels not normally inspected as a consequence of location of operation, which must obtain COIs for changes in location of operation or a change of service (e.g., a barge or dredge which changes location of employment via a route which would subject it to the requirements for seagoing barges).

b. Procedures. The Coast Guard has established an internal numbering system as a standard for record maintenance and tracking of tank and dangerous cargo barge. This system is used to track vessels through changes of ownership, operators, and names for maintenance of MISLE. Upon receipt of a COI Amendment or Report of Marine Accident, Injury or Death (CG-2692) on a certificated but undocumented vessels, the Marine Safety Information System Branch, Commandant (CG-5PC), will assign to that vessel a number consisting of the letters "CG" followed by six numerals. Cognizant field units will be notified of the number assigned to each vessel; all COIs and reports should list that number in the "Official Number/Award Number" block of the form.

NOTE: Owners are encouraged, though not required, to mark their vessels with the Coast Guard number in a manner similar to marking of Official Numbers.

CC. INSPECTION AND CERTIFICATION OF MOORED PASSENGER/ATTRACTION VESSELS

1. Purpose

The purpose of this policy is to set forth procedures for the inspection and certification of temporarily moored attraction vessels as passenger vessels.

2. Discussion

a. Attraction vessels are vessels that are put on public display or used as a platform for a public exhibit and carry passengers only while temporarily moored to dock.

(1) By charging visitors some form of admission to board, or accepting donations or some other valuable consideration, attraction vessels are subject to U.S. inspection laws as passenger vessels or small passenger vessels.

(2) These vessels may operate on an established itinerary, calling on several ports for brief periods of time.

(3) Attraction vessels may be of unique or unusual design, have some historical significance, be restored or constructed as replicas of former vessels, or provide some related maritime interest to the public.

(4) Generally, the design or construction of an attraction vessel precludes conformance with or retrofitting to meet U.S. passenger vessel requirements without damaging the originality of the vessel.

b. The term passenger as used here is the same as defined in 46 U.S.C. 2101(21)(A).

---

3. General Policy

a. In recognition of the reduced safety risks associated with a vessel that is moored to a fixed structure, an attraction vessel may be issued a COI to permit operation as a passenger vessel if the OCMI is satisfied that the vessel can operate safely while moored. For further information, see NVIC 2-00, Section 6.

(1) A COI may be issued under this policy with a period of validity up to 1 year and will contain specific operating restrictions, including those addressing local conditions.

(2) An attraction vessel with a valid COI that relocates in another OCMI zone will undergo subsequent reinspection by the cognizant OCMI to determine the need to specify operating restrictions based upon local port conditions.

b. Regardless of the period of validity of the COI, an attraction vessel will be considered to be operating under the terms of its COI only while it is moored at the location(s) and during the period authorized, as specifically endorsed on the COI by the OCMI.

---

4. Applicability

These guidelines apply to a vessel which meets the following criteria:

a. The vessel is a U.S.-flag vessel that is either uninspected or, if inspected, lacks authorization on its COI for the carriage of passengers.

b. The vessel is a foreign-flag vessel that does not possess a valid SOLAS Passenger Ship Safety Certificate.

c. The vessel is visiting a port or place for a limited period of time.

d. The vessel is not permanently moored.

e. A charge for admission or some form of compensation or consideration from visitors is required, expected, or accepted in conjunction with boarding the vessel.

f. The vessel does not carry passengers while the vessel is underway or at anchor.

---

5. Duration of Operation in a Zone

This policy is not intended to permit a vessel to circumvent vessel inspection laws by operating as a passenger vessel while moored for an indefinite period of time in the same general area. A period of approximately 1 month at the same location or port area is considered reasonable, however, OCMIs may permit a brief extension of the initial period in unusual circumstances. An OCMI must, when issuing or amending a COI issued pursuant to this policy, specify the dates when and place(s) in the OCMI's zone where the vessel is permitted to operate in the operating details of the COI.

a. Jones Act status. U.S. Customs, in practice, has not considered a foreign-built vessel moving along the coast and charging a fee for exhibition as coastwise trade, provided promotional literature or articles for sale or exhibit are not loaded and unloaded between coastwise points. If there is doubt as to the applicability of the Jones Act to a particular attraction vessel, an OCMI may require, prior to issuing a COI, the vessel operator to obtain a ruling from the U.S. Customs Service, Office of Regs and Rulings, Entry Procedures and Carrier Branch, 1300 Pennsylvania Avenue, Washington, D.C. 20229, Tel (202) 927-2320.

b. Application for inspection. To apply for inspection as an attraction vessel, the owner or operator of an uninspected or foreign vessel will submit an application for inspection to the cognizant OCMI. Accompanying the application for inspection, the owner or operator must submit additional vessel information per paragraph 7.a. and a port operating plan containing port-specific information per paragraph 7.b.

(1) If the vessel will be operating on an itinerary and calling in other OCMI zones, the owner or operator should arrange for reinspection in subsequent ports, but need only submit a port operating plan in advance.

(2) A U.S.-inspected vessel not in passenger service will be required to submit an application for inspection and information to the OCMI.

c. Additional vessel information and plans required. Accompanying the application for inspection, the owner or operator must provide the following information to the OCMI:

(1) A copy of the vessel's fire control plan and/or structural fire protection plan, if such plans are available.

(2) If a fire control plan in accordance with SOLAS 74 (as amended), Chapter II-2, Reg. 20 is unavailable, a basic plan should be provided, indicating the locations and types of all emergency response or safety-related equipment available on the vessel, including fire fighting, damage control, and lifesaving equipment.

(3) The proposed maximum number of passengers to be permitted aboard the vessel, including the calculations used for determining the maximum number of passengers.

(4) Results of the most recent hull examination, if any, including an assessment/testament as to the condition of the hull.

(5) Copies of any applicable certificates issued by other OCMIs, the vessel's home Administration, or a recognized classification society (e.g., Load Line, SOLAS, etc.).

(6) The minimum number of crewmembers to be aboard the vessel during hours of operation and an explanation of their job descriptions and qualifications.

(7) Amounts, types and stowage of any flammable or combustible liquids including fuel aboard the vessel.

(8) The proposed (general) itinerary of the vessel while in U.S. waters, including ports, dates of arrival and departure.

d. Submission of Port Operating Plans. A Port Operating Plan must be submitted to the OCMI conducting the inspection for certification and to the OCMI for each subsequent zone where the vessel will be operating. The Port Operating Plan must provide detailed information concerning a vessel's intended operations while in each respective OCMI zone. Each Port Operating Plan should include the following information:

(1) Approximate dates when the vessel will operate in the OCMI's zone.

(2) Location(s) in the OCMI's zone where the vessel will operate.

(3) Proposed hours of operation during which passengers would be permitted on board.

(4) Proposed method for mooring the vessel.

(5) Means of access/egress for passengers.

---

6. Inspection for Certification

The inspection for certification of an attraction vessel should be oriented towards identifying potential hazards to passengers on board that vessel while moored to a pier. In this respect, the requirements and scope of the inspection are significantly less than that for inspection of a vessel carrying passengers underway. The following provides general and specific requirements, particular areas of concern, and suggested equivalent standards of safety for moored attraction vessels.

a. Pollution regulations. Attraction vessels must comply with the requirements for pollution prevention and marine sanitation devices as found in 33 CFR Parts 151, 155, 156, and 159.

b. Decks, rails, and stairs. Deck areas, stairs and ladders must be free from tripping, slipping, and falling hazards to passengers. The OCMI may apply the standards for heights of deck rails from the regulations for small passenger vessels in 46 CFR Subchapter T.

c. Gangways (or brows). Gangways should be suitably sized and located so as to accommodate passenger/crew escape in the event of an emergency.

(1) Depending upon vessel arrangement and size and width of the gangway, the OCMI may require the installation of two or more gangways.

(2) Inspectors should closely scrutinize any gangway that is attached to the side of a vessel rather than supported by a gunwale or other deck support. Unless properly designed to accommodate the service load and the dynamic forces resulting from tidal changes and vessel surge, the mounting brackets used to attach the gangway to the side of the vessel are subject to potential failure, presenting a serious safety risk to persons using the brow. When side-mounting brackets are used, a redundant means for securing the gangway must be provided. This may be accomplished by use of ropes, chains or cables attached to a secure structure or fitting on deck, which could support the brow in the event of failure of the side brackets.

(3) Regardless of design and securing arrangements, OCMIs should consider requiring the installation of safety nets below all gangways, where practicable.

d. Lighting. Interior lighting in areas accessible to passengers should be adequate to the extent that portable lighting equipment should not be necessary. If emergency lights are not installed, the inspector may require guides or crewmembers on watch during hours of operation to carry suitable portable lighting. If the vessel operates at night,

there must be exterior lighting of sufficient intensity for illuminating the weather decks and gangway(s).

e. Electrical fixtures and wiring. Electrical installations and equipment must be reasonably safe from fire or electrical shock.

(1) For U.S.-flag vessels, inspectors should refer to the electrical standards in 46 CFR Subchapter J, K, or T (as appropriate) as a general guide.

(2) For foreign-flag vessels, the standards found in SOLAS 74/78 (as amended), Chapter II-1, Regulation 45 should be used.

f. Means of escape from below-deck spaces. If below deck areas will be accessible to passengers, at least two means of escape should be available or, as an equivalent, the number of passengers permitted below decks or in a space below decks at any given time should be restricted.

(1) The OCMI may also require that passengers be escorted by a crewmember in areas below deck.

(2) If below-deck areas have no emergency back-up lighting system, crewmembers assigned to escorting passengers must carry flashlights.

g. Engine room and bilges. Machinery spaces must be examined for potential fire hazards. If passengers will be permitted in machinery spaces, the vessel operator must identify to the inspector any equipment that may be in operation with passengers on board.

(1) An examination must be made to detect slipping and overhead hazards, adequacy of guards for rotating machinery, appropriate insulation of hot pipes or equipment, protection of open switchboards, etc.

(2) All pressure vessels must be identified to the inspector. If, as a result of the examination, areas are considered dangerous to passengers, they must be declared off limits and required secured during hours of passenger operation.

(3) Spaces should also be inspected for evidence of excessive water or oil in the bilges. If such condition exists, it must be corrected to the satisfaction of the OCMI prior to allowing passengers aboard the vessel.

h. Fire fighting equipment. The OCMI must be satisfied with the amount and type of fire fighting equipment aboard the vessel. The following fire equipment requirements are applicable:

(1) Fixed fire fighting equipment, if any, and portable extinguishers must be tested or serviced annually to the satisfaction of the OCMI. OCMIs may accept certificates issued by a professional service provider as evidence of proper servicing.

(2) In determining the number of portable extinguishers required, the OCMI may apply the standards of 46 CFR Subchapter T, K, or H, as appropriate.

(a) Portable extinguishers need not be Coast Guard-approved but must be of a marine type.

(b) The use of water fire bottles is prohibited.

(c) Only carbon dioxide, foam or chemical extinguishers suitable for marine application are permitted.

(3) Fire detection and alarm systems, if installed, must be tested to the satisfaction of the OCMI. Passengers must not have access to any space protected by fixed gas (CO^2 or Halon) fire extinguishing system unless the space has a time delay and audible warning device that activates prior to releasing the extinguishing agent. Further, the OCMI must be satisfied that the space has adequate means of escape for the maximum number of passengers permitted in that space at any given time.

NOTE: The OCMI may require that fire drill be conducted as part of the inspection for certification.

i. Lifesaving equipment. A minimum of two ring buoys with lines must be provided on board the vessel. Additional ring buoys with lines as specified by the OCMI may be required. If the vessel operates at night, ring buoys must be outfitted with lights.

j. Means for retrieval of persons from the water. The vessel must have suitable means or a procedure acceptable to the OCMI for the retrieval of persons from the water. The OCMI may require that a man-overboard drill be conducted as part of the inspection for certification.

k. Hull condition. The OCMI must be satisfied with the condition of the vessel's hull. When evidence of a satisfactory hull examination or internal structural examination within the past 5 years is unavailable, the vessel may be required to undergo an appropriate hull examination. In such case, the OCMI may require a drydock examination, underwater survey or internal structural examination, as necessary to gain an adequate condition assessment of the vessel hull.

l. Mooring facilities. The vessel's mooring location, equipment and arrangements must be acceptable to the OCMI.

(1) An OCMI should consider the location of the vessel in terms of vessel traffic, nearby waterfront facility operations, and accessibility by emergency responders.

(2) The general condition of the pier or other structure that the vessel is moored to should be evaluated for the safe transit of passengers and access by emergency vehicles.

(3) OCMIs may use the risk matrix for permanently moored vessels, as found in I.1 of this chapter, as a guide when evaluating mooring arrangements.

m. Public address system. Vessels that permit passengers below decks must have a public address system or equivalent means, acceptable to the OCMI, to alert the crew and passengers to emergencies and possible evacuation.

---

7. Operating Conditions and Restrictions

The OCMI may impose the following operating restrictions, based on the design and construction of the vessel as well as local conditions. In preparing or amending a COI, the OCMI must use the Vessel File Operating Details (VFOD) in MISLE to specify restrictions.

a. Fires and smoking. Generally, smoking or cooking using an open flame should not be permitted during hours of passenger operation on vessels that do not meet structural fire protection standards for passenger vessels. This restriction may be relaxed for vessels with Coast Guard COIs for service other than a passenger vessel or for foreign vessels with valid SOLAS Cargo Ship Safety Certificates or a Special Purpose Ship Safety Certificates issued in accordance with IMO Resolution A.534(13).

b. Means of access to the vessel. The vessel must maintain a clear area around the gangway(s) to facilitate evacuation of passengers and access for emergency personnel and equipment.

c. Passengers permitted. The number of passengers on board must be limited as determined by the OCMI. The OCMI may apply standards from 46 CFR Subchapter T regarding deck area, rail space, or fixed seating, or use stability information on the vessel, if available. The number of passengers permitted may be restricted based upon the number of crewmembers aboard the vessel available to respond to an emergency,

adequacy of escape route(s) or width/number of gangway(s). Passengers must not be permitted to remain overnight or go aloft in rigging.

d. Emergency plans. OCMIs must require the vessel owner or operator to develop emergency action plans to address evacuation of passengers in the event of an emergency on board and procedures for responding to passenger injury. This may include a requirement to submit a copy of a general arrangement plan of the vessel to assist the local fire department or other emergency responders. The OCMI should, as a matter of routine, notify the local fire department regarding an attraction vessel operation and encourage a familiarization visit to the vessel.

e. Communications. As a minimum, the vessel should have some form of radio or telephone communications available for emergencies, either on board or reasonably available on the pier. Public pay phones are not an acceptable alternative. Also, a listing of local phone numbers for Coast Guard, fire department, police and other emergency services should be readily available.

---

8. Crew Assignments

a. Evaluation of manning adequacy. As part of an inspection for certification, the OCMI must evaluate the crew assignments submitted by the vessel operator to determine if the number of personnel on duty is adequate for crowd control, emergency response and, if required, escorting passengers. The number of crewmembers required on board and on duty while conducting passenger operations should be based on the following minimums:

(1) A person in charge, having authority over the vessel operation and crew, must be assigned.

(2) A person must be stationed in the immediate proximity of each gangway to monitor the arrival and departure of passengers.

(3) Additional personnel must be assigned as necessary for escorting passengers below decks or maintaining a roving safety/fire watch.

b. Reduced manning. The OCMI may authorize a reduced number of crewmembers on duty depending upon the number of passengers on board and the configuration of the vessel. This reduction may be contingent upon the vessel operator demonstrating that there are means to adequately monitor the number of passengers on board at any given time.

---

9. U.S. Inspected Vessels Operating as Attraction Vessels

A U.S. vessel that possesses a valid COI as other than a passenger vessel or small passenger vessel and desires to operate as an attraction vessel must be inspected to the extent necessary to determine that the vessel can safely accommodate the number of passengers requested. Upon requesting inspection, the vessel operator must indicate the number of passengers requested, number and job description of crewmembers aboard, and provide a Port Operating Plan. The vessel's existing COI must be amended to address special operating conditions that may be imposed while the vessel is operating as an attraction vessel.

---

10. Operation in Other OCMI Zones

Vessels that will operate in more than one OCMI zone are subject to a reinspection prior to commencing operation in a new zone to satisfy the OCMI that the vessel is safe for the intended operation. In general, OCMIs should employ the conditions of a previous OCMI, but may impose additional operating restrictions more suitable to local conditions. Insofar as possible, OCMIs should be consistent in their application of conditions and restrictions. The first OCMI who has contact with a vessel that will operate in other zones should obtain the vessel's itinerary and notify the other OCMIs of the vessel's intentions.

a. MISLE. OCMIs must employ MISLE to enter vessel particulars, record inspection activities and deficiencies, and issue COIs. Detail products in the vessel file (e.g., portable fire fighting and lifesaving equipment) must be entered to the extent necessary to reflect equipment requirements on the COI. Also, an inspection note should be entered in MISLE indicating the vessel's last hull examination date, regardless of whether the examination was attended by Coast Guard inspectors.

b. Vessel inspection user fees. Because moored attraction vessels are issued Certificates of Inspection, they are subject to paying vessel inspection user fees, unless otherwise exempted. The qualifications for exemption are in 46 CFR 2.10-5.

NOTE: These regulations were amended 21 April 1997 and are reflected in the 1998 version of the CFR.

c. Attraction vessels measuring less than 100 GT will be assessed fees as small passenger vessels; attraction vessels of 100 GT or more will be assessed fees as other vessels. See 46 CFR Table 2.10-101 for a list of fees regarding attraction vessels.

CHAPTER 5: INSPECTION OF PUBLIC VESSELS

A. INTRODUCTION

Public vessels of the United States, other than those owned or operated by the U.S. Maritime Administration (MARAD), are not generally required by law to be inspected and certificated. However, several government agencies have requested the Coast Guard to assist them by conducting safety inspections on their vessels. In some cases, an agency will request a full inspection resulting in issuance of a Certificate of Inspection (COI). In other cases, the request is for an inspection of limited scope or of specific items. The Commandant intends to cooperate with these agencies by carrying out requested inspections in accordance with inspection agreements, as resources permit. Public vessels subject to inspection under Federal statutes and regulations must be inspected under the appropriate regulations in Title 46 of the Code of Federal Regulations (CFR).

B. REFERENCES

1. Statutes

The statutes relating to inspection of public vessels are primarily contained in 46 U.S.C. 2101(24) and 2109.

a. 46 U.S.C. 2101(24) defines a public vessel as one that "is owned, or demise chartered, and operated by the United States Government or a government of a foreign country; and…is not engaged in commercial service."

b. 46 U.S.C. 2109 states that Subtitle II of Title 46 U.S.C does not apply to a "public vessel of the United States". However, it does apply to vessels (except for St. Lawrence Seaway Development Corporation vessels) owned or operated by the Department of Transportation (DOT) or by any corporation organized or controlled by DOT.

2. Regulations

The regulations explaining the application of inspection requirements to public vessels include the following:

TYPE	CFR CITATION
Tank Vessels	46 CFR 30.01-5(d)(3)
Passenger Vessels	46 CFR 70.05-1(a)(3);
Cargo and Miscellaneous Vessels	46 CFR 90.05-1(a)(4);
Public Nautical School Ships	46 CFR Part 167
Oceanographic Research Vessels	46 CFR 188.05-1(a)(4)

C. GENERAL INSPECTION PROCEDURES

1. Administrative Procedures

An Application for Inspection of U.S. Vessel, Form CG-3752, must be addressed to the Officer in Charge, Marine Inspection (OCMI) in whose zone the vessel is located. Upon satisfactory completion of the inspection, the OCMI must issue the vessel a COI. The government agency involved may, upon request, obtain a copy of the certificate. Unless a public vessel is able to comply with all applicable requirements (except as modified by agreements or additional instructions), no COI will be issued. Instead, a letter will be addressed to the agency operating the vessel indicating the extent of the inspection and all deficiencies noted.

2. Acceptance of Alternate Equipment or Arrangement

For certain vessels, agreements have been made to accept certain equipment or other standard specifications as equivalent to those specified in the regulations. These equivalents are described below. Inspectors must exercise the same degree of care and diligence in inspecting government vessels as they would for commercial vessels.

3. Reporting Procedures

Inspection reports for public vessels must be made in the same manner as for commercial vessels insofar as practicable, in the appropriate Inspection Booklet, CG-840. Specialized local report forms may be used to cover limited inspections. The OCMI must file reports of all inspections. See MSM Volume II, Material Inspection, COMDTINST M16000.7A (Series), Chapter A3.

D. MISCELLANEOUS DECISIONS AND INTERPRETATIONS

1. Public Vessels

The term "public vessel," as defined in 46 U.S.C. 2101(24) to obtain exemption from inspection requirements, refers to vessels that are--

a. Not engaged in commercial service; and

b. Owned or demise chartered and operated by the United States Government or the government of a foreign country.

NOTE: The definition of "public vessel" generally excludes use in trade or commerce. Military vessels which engage in a commercial activity lose their public vessel exemption status for the duration of the commercial operation. They must apply to the OCMI for inspection and certification for the route and service in which they wish to engage.

2. State-Owned Vessels as Passenger Vessels

The Passenger Vessel Safety Act (PVSA) of 1993 established clear definitions of the terms "passenger," "passenger for hire," "passenger vessel," "small passenger vessel," and "uninspected passenger vessel." These definitions should alleviate the former difficulties in determining whether or not state owned vessels are subject to inspection.

3. Carriage of Vehicles Containing Hazardous Materials

There is no regulatory basis for the inspection of vessels based solely on their carriage of transport vehicles containing hazardous materials.

a. With regard to the transportation of hazardous materials in the transport vehicles carried on vessels, the Coast Guard may still enforce the provisions of 49 CFR Part 176, specifically 49 CFR 176.11(d). Additionally, free ferries (state-owned and operated vessels which do not charge) meet the definition of uninspected vessels in 46 U.S.C. 2101(43) and are therefore subject to the provisions of 46 U.S.C Chapter 41 as well as 46 CFR Subchapter C.

NOTE: Free ferries are uninspected vessels but they do not meet the definition of "uninspected passenger vessels" because they do not carry passengers for hire.

b. In addition to the safety oversight, there is also authority under the Ports and Waterways Safety Act, 33 U.S.C. 1223, to impose conditions of operation on free ferries if there is a determination that such action is justified in the interest of safety.

(1) This means that that, should the Captain of the Port (COTP) determine that the carriage of hazardous materials aboard these vessels is unsafe for passengers; the COTP can impose specific conditions of operation on these vessels.

(2) Before doing so, the COTP is required to take into account the considerations established in 33 U.S.C. 1224. Issues which may be considered as conditions of operation are not limited to the vessel's structural condition, equipment, or route, but, if deemed appropriate, could include items such as restricting passenger carriage and/or imposing crew qualifications while the vessel is carrying hazardous materials.

E. VESSELS OF THE MILITARY SEALIFT COMMAND (MSC)

1. Inspection Agreement

The Commander, Military Sealift Command (MSC) (an arm of the U.S. Navy (USN)) has requested that the Coast Guard inspect and certificate MSC vessels, which are operated by civilian merchant mariners. Such a vessel is normally designated "MSC, in service, civilian-manned" on the COI. The term "in service" contrasts with "commissioned" naval ships, which are manned by military personnel. MSC intends that no civilian-manned vessel will be operated without a COI, unless military requirements make it necessary.

The Coast Guard will not normally be asked to inspect and certificate the following vessels:

a. Those vessels controlled by the Commander, MSC Far East Area.

b. Landing craft-type vessels, such as Landing Ships, Tank (LSTs) and Landing Crafts, Medium (LCMs).

c. Vessels that are essentially military in character, by virtue of assignment or construction standards.

The Coast Guard will inspect MSC vessels for which inspection requests are filed to verify that they comply with the appropriate requirements. OCMIs must certificate MSC vessels that comply with the regulations (as modified by further agreements or instructions). COIs must not be issued to MSC vessels that do not meet the requirements.

---

2. Applicability of SOLAS 74/78

Vessels certificated as "MSC, in service, civilian-manned" are Department of Defense (DOD) vessels used for public purposes. They are not subject to the requirements of the 1974 SOLAS Convention and its 1978 Protocol, and will not receive SOLAS certificates, even if the vessel meets SOLAS in full and a certificate is requested by MSC. A letter stating the vessel's compliance may be issued.

NOTE: This provision does not apply to those commercial vessels on time charter to MSC from MARAD.

---

3. COI Modifications

a. Route permitted and conditions of operation. An asterisk must be inserted at the word "thereunder" in the eighth line of an MSC vessel's COI Form CG-841. In the space for "Route Permitted and Conditions of Operation" there must be an asterisk and the notation "In accordance with the standards applicable to MSC vessels."

b. Class. In the space provided for the vessel's class, insert the designations "Naval transport/cargo vessel/tankship (as appropriate), in service, civilian-manned."

c. Manning. In the case of P2, C3, and C4-type vessels, the presence aboard of three additional Able Seamen, not required to stand watches, must be included in persons authorized to be carried in the crew.

d. Persons in addition to the crew. When deemed necessary for defense purposes by the Commander, MSC, inspected MSC vessels may carry civilian or military personnel in addition to the crew expressly to carry out vessel missions. Such personnel must not be involved in the navigation of the vessel and are not considered members of the crew or passengers. Their presence must be indicated in a separate endorsement of the COI and reflected in the total of persons allowed aboard.

---

4. Regulatory and Equipment Modifications

a. In addition to material normally accepted by the Coast Guard, the OCMI may accept materials and equipment on MSC vessels that meet the requirements of any of the following authorities:

(1) The technical bureaus of the Department of the Navy.

(2) Military specifications (MILSPECs), including Joint Army Navy (JAN) specifications.

(3) Federal specifications used for military purchases.

(4) National Military Establishment (NME) specifications.

b. Vessels of special design. The Commandant may, in cases of specially designed MSC vessels, permit variations from statutory and regulatory requirements if they are necessary for the special purposes for which the vessels are intended. Initial inspection files must include correspondence and other information on the variations allowed; these should be consulted at subsequent inspections for certification.

c. Structural steel renewals. These must incorporate at least the minimum requirements of the Coast Guard and the American Bureau of Shipping (ABS).

d. Lifesaving equipment. Requirements for lifesaving equipment on inspected vessels are shown in Figure B5-1. Percentage requirements are based on the total number of persons on board.

e. Pyrotechnics. USN pyrotechnics may be carried in lieu of Coast Guard approved pyrotechnics.

f. Lifefloats. USN lifefloats that are identified by nameplates as complying with the provisions of MILSPEC MIL-F16143 are acceptable, provided they are in good condition.

g. Canned drinking water. Emergency drinking water canned under MILSPEC MIL-W-15117 may be accepted in lieu of Coast Guard approved drinking water. Such cans are undated and may remain in service for an indefinite period. Rejection must be based on deterioration of cans or other defects that the inspector judges to make the water unusable. Coast Guard-approved water cans will be rejected after five years.

5. Inspection Waivers

Waivers from inspection requirements must be made in accordance with the provisions of 46 CFR 6.06.

---

6. Cargo Tank Examinations for Marine Prepositioning Ships (MPS)

It is understood that Marine Prepositioning Ships (MPS) carry large quantities of bulk liquid cargo. Therefore, it may be impracticable to conduct cargo tank internal inspections except when the vessels are in drydock and the cargo tanks are gas free. Inspections of any tanks which are gas freed, safe for entry, and accessible, together with internal structural examinations, may be conducted to satisfy the requirement for alternate cargo tank internal examinations. These inspections must be conducted to the satisfaction of the OCMI.

F. VESSELS OF THE U.S. ARMY CORPS OF ENGINEERS (USACE)

---

1. Inspection Agreement

Upon application for inspection, the Coast Guard will inspect and certificate U.S. Army Corps of Engineers (USACE) vessels that comply with applicable statutory and regulatory requirements. When a USACE vessel does not comply with requirements, a written statement of the conditions found will be forwarded to USACE with the returned application.

---

2. Regulatory and Equipment Modification

a. Lifesaving equipment. At the request of the Chief of Army Engineers, the Commandant has accepted unicellular plastic lifesaving ring buoys, MILSPEC MIL-R-0016847, for use on USACE vessels.

(1) The Coast Guard has reached an agreement with USACE on upgrading the safety standards for lifesaving equipment. The USACE has agreed to replace unicellular plastic foam work vests (MIL-L-17653) with Coast Guard-approved Personal Flotation Devices (PFDs).

(2) The old work vests will be replaced on all USACE vessels except those engaged on river routes, in quantities specified by Coast Guard regulations. The old work vests may be retained for use by crewmembers working near or over the water, as per the regulations.

b. Manning. Vessel manning issues are discussed in the MSM Volume III, Marine Industry Personnel, COMDTINST M16000.8B (Series).

G. DOD/NATIONAL AERONAUTICS AND SPACE ADMINISTRATION (NASA) INSTRUMENTATION SHIPS

1. Introduction

Special-purpose ships that are owned by the United States and operated as public vessels to provide instrumentation facilities for DOD and the National Aeronautics and Space Administration (NASA) missile and space programs are classed as "instrumentation ships." These are under the control of the Commander, MSC.

2. Inspection and Certification

Upon application, these vessels will be inspected and certificated by the Coast Guard. 46 CFR Subchapter I (Cargo and Miscellaneous Vessels) applies to instrumentation ships, insofar as practical. The entry for "Total persons allowed" on the COI must be the maximum number permitted by the Coast Guard (normally, the capacity of the primary lifesaving equipment aboard will be the determining factor). Such vessels manned by military rather than civilian personnel will be awarded Letters of Inspection in lieu of COIs. Civilian crewmembers must be licensed or certificated as a condition of employment on such vessels. When the number of persons aboard exceeds normal manning standards or the vessel varies significantly from the standard "cargo ship" configuration, additional requirements for improved access and fire protection may be imposed.

3. Special Instrumentation Equipment

In regard to special instrumentation equipment for instrumentation vessels, the Coast Guard exercises plan approval and inspection of electrical distribution systems only to the point of the vessel's electrical power takeoff. The Coast Guard's concerns are fire, personal hazard, and interference to the vessel's service power or main propulsion plant that may be caused by instrumentation systems, not the proper functioning of such systems themselves.

4. Manning Standards

The OCMI specifies the minimum manning requirements for instrumentation ships on the COI. The OCMI does not limit categories of persons on board instrumentation ships. For "normal" operation under the COI, the Commandant requires manning by properly licensed and certificated personnel in the deck, engineering, staff, and steward departments. All persons not employed in those categories are considered “other persons employed or engaged in any capacity on board a vessel on the business of the vessel" (see 46 CFR 90.10-29) and are not required to hold Merchant Mariner's Credentials).

NOTE: For more information, see the MSM, Volume III, Marine Industry Personnel, COMDTINST M16000.8B (Series).

---

5. Accommodations

The requirements of 46 CFR 92.20 do not apply to "other persons employed or engaged in any capacity on board a vessel on the business of the vessel."

---

6. Operation under Special Conditions

Under certain unforeseen conditions and mission requirements, it may be necessary for instrumentation ships to sail under conditions not permitted by the COI. When such conditions prevail, the Commander, MSC will authorize the vessel to sail without compliance and notify Commandant (G-MOC) of such authorization.

---

7. Casualty Review

The Masters/Commanding Officers (COs) of civilian or military manned instrumentation ships are not required to report marine casualties to the Coast Guard, and the Coast Guard will not investigate such casualties unless specifically requested to by DOD. However, contract-operated instrumentation ships and their masters are required to report marine casualties to the Coast Guard, which will investigate them unless specifically requested not to by DOD.

NOTE: For more information, see the MSM Volume V, Investigations and Enforcement, COMDTINST M16000.10A (Series).

---

8. Disciplinary Actions Against Crewmembers

Necessary disciplinary actions must be taken in accordance with existing agreements, modified as necessary, between the Coast Guard and MSC. See MSM V for more information on this subject.

---

9. Lifesaving Equipment

a. Lifeboats. Generally, these must be approved under 46 CFR 160.035 for a 200-percent requirement. If the vessel meets requirements for one-compartment subdivision and stability in accordance with 46 CFR Parts 73-74, only 100-percent lifeboatage is required.

b. PFDs. These must be approved under 46 CFR 160.002, 160.005, or 160.055, or USN MIL-L-10845, for a 100-percent requirement.

c. Inflatable life rafts. These must be approved under 46 CFR 160.051. 46 CFR 94.10-55 provides for certain substitutions of inflatable life rafts for lifeboats.

---

10. Pyrotechnics

USN pyrotechnics are acceptable.

---

11. Repairs and Alterations

Plan approval for new construction, conversion, and alterations must be carried out in accordance with applicable Coast Guard regulations. Notice of repairs or alterations must be submitted to the Coast Guard in accordance with 46 CFR 91.45-1. Inspections of such alterations or repairs must be accomplished in accordance with 46 CFR 91.45-5.

H. NATIONAL OCEANOGRAPHIC AND ATMOSPHERIC ADMINISTRATION (NOAA) VESSELS

Only 100-percent lifeboatage is required for NOAA vessels that meet one-compartment subdivision and stability requirements.

I. VESSELS CHARTERED BY THE NATIONAL MARINE FISHERIES SERVICE (NMFS)

1. Introduction

An inspection agreement between the Coast Guard and the National Marine Fisheries Service (NMFS) concerns commercial fishing vessels chartered to the agency for regulatory or research purposes. When a commercial fishing vessel is selected by NMFS for a charter, the Coast Guard District Fishing Vessel Safety Coordinator or local MSO examiner will be informed of the vessel's name, official number and location in order to schedule an agreeable time to conduct a dockside examination.

2. Inspection Standards

NMFS chartered vessels must comply with all applicable laws and regulations for fishing vessels. The Fishing Vessel Examiner will conduct a dockside examination of the vessel. The examination record must indicate whether or not the vessel is in compliance with applicable regulations. The Examiner must leave the original inspection booklet aboard the vessel, retain a copy locally, and forward copies to the NMFS and the District Fishing Vessel Safety Coordinator.

3. Standards of Seaworthiness

NMFS will make a careful selection of the vessels it desires to charter to ensure that they are basically seaworthy. The Coast Guard examination is not primarily an inspection for seaworthiness. However, unsafe structural conditions that are observed must be reported to Commandant (CG-CVC), and a Letter of Inspection must not be issued. In such a case, NMFS generally will cancel the charter and hire another vessel.

4. Letters of Inspection

Vessels that comply with the applicable requirements must be issued Letters of Inspection by the OCMI. A sample letter is located in Figure 12-2. The original Letter of Inspection must be posted aboard the vessel, with a copy retained by the OCMI and two copies forwarded to Commandant (CG-CVC).

FIGURE B5-2: SAMPLE LETTER OF INSPECTION FOR
CHARTERED COMMERCIAL FISHING VESSELS

This letter expires on (expiration date of charter).

The (VESSEL NAME), (O.N.), was inspected by the Coast Guard on (DATE), at (PLACE) and was found to be in compliance with the applicable inspection criteria approved jointly by the National Marine Fisheries Service and the U.S. Coast Guard.

This vessel is considered satisfactory for operation during the period of charter on (ROUTE).

It is understood that a maximum of crew and persons in addition to the crew will be carried. Total persons allowed is (#).

Primary Lifesaving Portable Fixed

Equipment Data

Fire Extinguisher Data

Officer in Charge, Marine Inspection
Inspection Zone

J. VESSELS CHARTERED BY THE INTERNATIONAL HALIBUT COMMISSION

Vessels chartered by the International Halibut Commission must be inspected and certificated in the same manner as NMFS chartered vessels.

K. INSPECTION OF BOILERS OR PRESSURE VESSELS ON FLOATING EQUIPMENT

1. Application for Inspection

Application for inspection of boilers or pressure vessels only, on Federally-owned floating equipment, must be made to the OCMI in whose zone the equipment is located.

2. Inspection Reports

All reports concerning such inspections must normally be made on the form(s) supplied by the agency with custody of the equipment being inspected. Such forms must normally be filed by the OCMI.

Copies of the report must be forwarded to the representative of the agency involved.

L. MARITIME ADMINISTRATION READY RESERVE FORCE (RRF) VESSELS

1. Introduction

As noted in the introduction to this chapter, public vessels are not generally subject to inspection, except for those owned or operated by the MARAD. Coast Guard policy concerning inspection of MARAD Ready Reserve Force (RRF) vessels is outlined in a Memorandum of Understanding (MOU) between the Coast Guard and MARAD and is contained in the MSM Volume X, Interagency Agreements and Acronyms, COMDTINST M16000.15A (Series). This MOU recognizes the special nature of these vessels and the need for a special inspection policy.

2. Background

MARAD vessels which are being maintained in continuous operation generally conform to the same regulations and inspection intervals applicable to their commercial counterparts. However, most RRF vessels spend the majority of their life in a deactivated, non-operational status. Because of this unique set of circumstances, the USCG/MARAD MOU allows inspection intervals to be modified and the correction of outstanding deficiencies delayed when RRF vessels are in a deactivated status. The current MOU was a direct outgrowth of lessons learned by both OCMIs and MARAD personnel during RRF vessel inspections conducted for activation in support of operation DESERT SHIELD/DESERT STORM (August 1990 to July 1991). The MOU is intended to permanently capture the knowledge and experience gained during this first large scale activation of the RRF since its creation in 1976.

---

3. Summary of Significant Additions to the USCG / MARAD MOU

a. Annex III, command, control and communication. A third annex was added to the MOU which outlines procedures for coordination and communication between USCG/MARAD and contract vessel operators at various levels within each organization. This third annex emphasizes early and frequent communication for resolution of inspection issues.

b. Time limit for completion of deficiencies. A limit of one year after completion of the inspection for certification was placed on correction of material deficiencies for RRF vessels in phase IV, maintenance.

(1) Under the previous MOUs, material deficiencies could be deferred indefinitely during phase IV until the vessel was activated for operations. Attempting to correct all these deficiencies upon activation resulted in substantial delays to commencement of operations.

(2) This time limit is intended to minimize the number of deficiencies which will require correction should an RRF vessel be required to activate on short notice. By allowing a year from the date the COI inspection is completed to correct deficiencies, MARAD has retained the flexibility to schedule necessary shipyard periods and operational tests of the vessels' systems during phase IV.

c. RRF vessels in phase IV that exceed the time limit for correction of deficiencies. The MOU allows OCMIs to remove RRF vessels from certificated status if deficiencies remain uncompleted beyond the allowable time limit established in the MOU.

(1) This is not intended to be a punitive measure. The intention of this provision is to match inspections to those periods when actual repairs or operations are being conducted. OCMIs should focus inspections on those periods when the vessel is ready to make repairs, conduct tests, or demonstrate the proper operation of equipment or systems.

(2) If an RRF vessel cannot conduct required repairs, tests, or inspections before the time limit, it lapses into a period during which its COI is no longer valid. However, because MARAD may seek to recertificate the vessel at a future date, OCMIs should retain vessel files, update records of the vessel, and witness equipment tests and repairs when requested to do so by MARAD or their authorized representative.

(3) The goal of both MARAD and the Coast Guard in the inspection process is to maintain RRF vessels in a certificated status with valid COIs in the possession of the vessels' operator. Ideally, the only outstanding deficiencies on any RRF vessel in phase IV should be to witness reinstallation and testing of equipment which has been intentionally removed to prevent damage during extended periods of deactivation.

---

4. National Defense Waiver Requests

When necessary, national defense waiver requests will be coordinated between MARAD and DOD and submitted to the Coast Guard under authorized DOD signature. The previous MOU required the same level of coordination, but directed MARAD to sign and submit the waiver form. 46 CFR Part 6 gives DOD the right to waive inspection requirements for the purpose of national defense for vessels operated or chartered by DOD, in this case, RRF vessels. Other government agencies may request a waiver of inspection requirements from the Coast Guard based on national defense if "the urgency of the situation outweighs the marine hazard involved" (46 CFR 6.01(b)). Because of MARAD's location within the Department of Transportation, vice DOD, the Coast Guard could deny MARAD’s requests for national defense waivers if it did not meet regulations. This change to the MOU places the evaluation of the level of hazard to RRF vessels and crew with DOD when the primary consideration is national defense. The Secretary of Defense has delegated signature authority for national defense waivers to the Commander, MSC.

CHAPTER 6: POLLUTION PREVENTION

A. INTRODUCTION

The oceans and waterways of the world have long been used by the maritime community, shoreside industries, and municipalities as catchalls for domestic and industrial wastes. Pollution results from acts of commission and omission. In either case, the technology to measure and combat the detrimental effects of pollution is available or is being developed.

---

1. Waterways Pollution

Our waterways are susceptible to pollution from many sources. Particulates are discharged into the air from industrial, utility, and transportation systems, and eventually enter the water through rainfall runoff or direct discharge. Ground water carries pesticides and other pollutants from rural areas into the waterways. There has been a rapid increase in the bulk transportation of hazardous substances on the nation's waterways. Oil and petroleum based products are highly visible examples, but by no means the only substances of this type (nor the most dangerous) that are moving continually through U.S. waters. The likelihood of catastrophic incidents involving these substances is a matter of constant concern. Less spectacular, everyday incidents such as vessel collisions, groundings, and failures of cargo transfer systems also result in the pollution of the marine environment. Pollution can occur in the ocean transport of oil in bulk quantities due to tank cleaning and ballasting operations, as well as the ballasting of fuel tanks in other types of vessels. Yet another pollutant, sewage finds its way into the water system. While municipal, private, and industrial sewage systems contribute the largest percentage of sewage to the waterways, a significant amount originates from commercial and private vessels.

---

2. Legislation

Congress has enacted legislation to restrict the discharge of pollutants into U.S. waters and to punish violators. The following is a list of the more popular congressional enactments: Among these enactments are--

a. The Federal Water Pollution Control Act (FWPCA), as amended, 33 U.S.C. 1251 et seq. (also known as the Clean Water Act);

b. The Ports and Waterways Safety Act (PWSA), as amended, 33 U.S.C. 1221 et seq.;

c. The Port and Tanker Safety Act (PTSA), 33 U.S.C. 1221 and 46 U.S.C. Chapter 37;

d. The Marine Protection, Research and Sanctuaries Act (MPRSA), 33 U.S.C. 1401 et seq.;

e. The Act to Prevent Pollution From Ships (APPS), 33 U.S.C. 1901 et seq., resulting from the International Convention for the Prevention of Pollution from Ships (MARPOL 73/78); and

f. The National Environmental Policy Act (NEPA), 42 U.S.C. 4321 et seq.).

NOTE: See MSM Volume I, Administration and Management, COMDTINT M16000.6 (Series) for a detailed explanation of these acts.

3. FWPCA and MARPOL 73/78

The principal statutes for controlling marine pollution are the FWPCA and APPS (MARPOL 73/78), which provide for the prevention of marine pollution by oil, hazardous substances, and sewage. The FWPCA further provides for early detection and notification of Federal authorities of discharges, enforcement actions in the event of violations, response and cleanup activities, and the regulation of Marine Sanitation Devices (MSDs) to comply with the standards set by the Environmental Protection Agency (EPA). It is the prevention aspect of the FWPCA, MARPOL 73/78, and supporting regulations, that is addressed in this chapter.

4. Prevention Aspect

The prevention aspect of the FWPCA and MARPOL 73/78 and their implementing regulations include the control of commodity handling operations, and the design and construction of vessels and facilities (onshore and offshore), to minimize the occurrence of harmful discharges. To this end, the Coast Guard and EPA share Federal responsibility for pollution prevention. The EPA is responsible for all facilities onshore, and up to 200 miles offshore, that are not transportation related. This includes facilities that drill, produce, gather, store, process, refine, transfer, distribute, or consume oil and hazardous substances (see 40 CFR Part 112). The Coast Guard, under the authority of 33 U.S.C. 1321(j)(1), promulgates regulations that provide equipment requirements, operating procedures, and training of personnel from vessels as well as from onshore and offshore facilities.

B. OIL POLLUTION PREVENTION REQUIREMENTS

1. Regulations

The regulations for the prevention of water pollution are authorized by 311(j)(1)(C) and (D) of the FWPCA, as amended (33 U.S.C. 1321 et seq.). Revised regulations, 33 CFR Parts 154-156, became effective on 3 March 1980. The regulations were revised to better address routine operations, such as cargo tank cleaning, bilge pumping, ballasting, equipment failure, and human error, which are the most frequent causes of oil spills. These operational spills can be prevented by maintenance and testing of equipment, personnel awareness, and proper procedural requirements.

2. Intent

The intent of the pollution prevention regulations is to prevent pollution through good marine practice as well as compliance with the letter of the law. If violations are detected during routine inspections, correction is the initial action to be taken; this must be followed by a Report of Violation and formal penalty action, if appropriate (see MSM Volume I, Administration and Management, COMDTINST M16000.6 (Series) and MSM Volume V, Investigations and Enforcement, COMDTINST M16000.10 (Series) for more information).

C. REQUIREMENTS FOR OIL TRANSFER FACILITIES (33CFRPART 154)

1. Applicability (33 CFR 154.100)

a. The regulations are aimed at preventing oil discharges that threaten substantial pollution of U.S. navigable waters.

(1) The regulations are not intended only to collect civil penalties.

(2) If violations are detected during routine inspections or examinations, correction is the primary objective.

(3) Marinas normally do not transfer oil in quantities that justify stringent regulation. Additionally, Coast Guard personnel are not available to monitor all minor oil transfer operations.

(4) Marinas are subject to 33 CFR Part 154 when transfers involve vessels with a capacity of 250 barrels (10,500 gallons) or more of oil. Such vessels pose a genuine risk of pollution, even when lesser quantities of oil are actually transferred.

(5) 33 CFR Part 154 applies to onshore facilities as defined in 33 USC 1321(a)(10) and to offshore facilities within U.S. navigable waters.

b. Federally owned and operated facilities. Federal facilities, regardless of the character of the vessels they service, come under the purview of 33 CFR Parts 154 and 156 (this includes Department of Defense (DOD) and Coast Guard facilities). Primary responsibility for enforcing the requirements of 33 CFR Parts 154 and 156 at Federally owned and operated facilities resides with the Federal agency that owns and operates the facility, not with the Coast Guard. However, consistent with its general enforcement responsibility and in the public interest, the Coast Guard will do the following:

(1) Support and assist the efforts of the Federal agency involved to comply with the pollution prevention regulations.

(2) Conduct inspections and monitor transfer operations at such facilities, and enter such facilities to gain access to commercial vessels berthed there, when approval is granted by the cognizant Federal agency.

(3) Advise other agencies of violations, when observed or reported, and of requirements that must be met to achieve compliance.

c. When a violation is observed at a Federally owned and operated facility, the Captain of the Port (COTP) must--

(1) Formally advise the responsible official of the violation(s);

(2) Explore all possible means of resolving the matter and achieving compliance; and

(3) Submit relevant documentation to the district commander for disposition if compliance is not forthcoming.

d. Upon receipt of documentation from the COTP indicating violations at such facilities, the district commander must explore all possible means of reaching a mutual agreement for achieving compliance. Such efforts must be undertaken with the district commander's counterpart in the cognizant agency, e.g., the regional administrator, district commandant, or district engineer and be fully documented. If this fails to

achieve a resolution of the situation, provide Commandant (CG-5P) all relevant information for resolution with the parent agency.

e. Federally owned, privately operated facilities. Routine enforcement policy and procedures apply to violations at such facilities.

---

2. Definitions (33 CFR 154.105)

The definition of "transfer," in clarifies the applicability of the regulations to transfers of oil within vessels. This definition also applies to 33 CFR 155 and 33 CFR 156. The definition of "oil" in 33 USC 1321(a)(1) applies to these regulations. "Oil" does not include liquefied flammable gases, or any substance designated by EPA as a "hazardous substance" in 40 CFR 116. This includes animal and vegetable oils. The regulations apply to bulk transfers of any kind of oil to or from a vessel with a capacity of 250 barrels or more.

---

3. Alternatives (33 CFR 154.107)

33 CFR 154.107 is worded so that the COTP may consider both economic and physical conditions when reviewing a proposed alternative to the regulations. However, the intent of the regulations should not be circumvented without good reason, even when alternative protection is afforded. Alternative requests should document the equivalency of protection.

a. Documentation. Documentation of alternatives to the regulations, including safety and pollution protection measures, is required.

(1) The COTP may request additional information from the owner or operator, if necessary, to evaluate the proposed alternative. A request must include an economic and environmental analysis.

(2) As an equivalent level of protection is required, no formal environmental impact statement is necessary.

b. Waivers. Waivers from compliance are granted as alternatives (granted by the COTP) or exemptions (granted only by the Commandant).

(1) COTPs must review waivers that were granted under the initial regulations to determine which waivers must be submitted to Commandant (CG-5P) for reapproval as exemptions.

(2) Most requests for deviations from the regulations should be processed as alternatives.

(3) A request that provides an alternative means of compliance that involves numerous facilities scattered throughout several COTP zones should not be treated as an exemption request simply because of the multiple, variously located facilities.

(4) Alternative procedures approved by the COTP should be described in the facility's the operations manual as well as the COTP's facility file.

---

4. Exemptions

Exemption requests must be forwarded to the Commandant only when all means of alternative compliance have been exhausted. For the relevant regulations, see 33 CFR 154.108. When appropriate, exemption requests forwarded to Commandant (CG-5P) must include observations or assessments of the situation from the COTP. These will aid in determining whether or not to grant an exemption.

---

5. Letter Of Intent

The operator, for purposes of the letter of intent, is the party responsible for the facility. This may not necessarily be an individual; if a corporation owns and operates a facility, the operator is that corporation and not any operating employee. For the relevant regulations, see 33 CFR 154.110.

---

6. Facility Examinations

Normally, examinations for compliance with 33 CFR Parts 154 and 156 are conducted during working hours. However, the COTP must conduct examinations whenever the facility is operational, as deemed necessary. Facility inspections must proceed inshore from the dock area as far as necessary to identify the oil transfer system, including the piping arrangement used to transfer oil to or from the storage or processing operations. For the relevant regulations, see 33 CFR154.120.

---

7. Requirement for Operations

Each facility must have an operations manual sufficient to guide a person generally qualified in oil transfer operations in performing his or her duties in an environmentally safe manner. These manuals are intended to be working documents for the benefit of personnel involved in oil transfer operations. At a minimum, the operations manual must be understood by all who are designated as a Persons in Charge (PIC). The operations manual should be the single source for learning standard operations as well as emergency procedures at a facility. Small facilities should have simple manuals; larger, multiproduct facilities require more comprehensive manuals. The requirement to send a copy of the operations manual with the letter of intent enables the COTP to verify that the owner/operator has established procedures for the facility to operate in an environmentally sound manner. The contents of certain manuals may be proprietary in nature. Therefore, the contents of operations manuals normally must not be released to others unless authorized in writing by the facility owner/operator. Seek legal advice if requests for information are received. For the relevant regulations, see 33 CFR 154.300.

---

8. Contents of Operations Manual

Personnel should know the locations of all required safety equipment. Providing cargo information is the responsibility of the vessel operator. This data must be readily available to facility personnel for safety and environmental reasons. A list of personnel names and telephone numbers may be on a separate sheet for easy amendment the regulations permit the operations manual to be in loose-leaf form for this purpose. For the relevant regulations, see 33 CFR 154.310.

---

9. Amendments to the Operations Manual

COTPs review operations manuals for the facilities in their zones. Facilities making substantial changes to their existing manuals must follow the procedure set forth in 33 CFR 154.320(b). A letter of adequacy addresses the scope of the manual's contents and ensures that certain information is covered in the manual, but does not constitute Coast Guard approval or certification of any particular procedure or equipment mentioned. For the relevant regulations, see 33 CFR154.320.

---

10. Examination of Operations Manual

For the relevant regulations, see 33 CFR154.325.

---

11. Hose Assemblies

a. Maximum Allowable Working Pressure (MAWP). 33 CFR 154.500(b) requires oil transfer hose assemblies to have a MAWP more than the sum of the relief valve setting (or the maximum pump pressure when no relief valve is installed) plus static head pressure of the transfer system at the point where the hose is installed.

(1) For more information on testing pressures, see subparagraph E.8.b below.

(2) For the relevant regulations, see 33 CFR154.500.

b. Marking. 33 CFR 154.500(e)(1) requires marking the MAWP on the hose. Do not mark burst pressure or test pressure on the hose. Pressures other than MAWP that are marked on hoses presently in use may be obliterated by any suitable means until replaced by hose with proper markings.

c. There is no need to test back pressure nozzles, as they are reliable for the small hoses with which they are used. They are not intended for large hose, which is not used with flush deck fittings.

---

12. Loading Arms

This section provides a uniform and safe standard for loading arms that is not subject to undue modification. An alternative under 33 CFR 154.107 may be requested for locally constructed arms. To avoid expensive retrofitting, only loading arms installed after 30 June 1973 are regulated. Manufacturers should be consulted in questionable cases. For the relevant regulations, see 33 CFR154.510.

---

13. Monitoring Devices

The primary purpose of these regulations is to provide monitoring systems for the detection of spilled oil to ensure adequate and rapid clean-up efforts. This requirement is intended only for those cases in which visual surveillance is insufficient to detect oil spills in very sensitive areas, or in which a complex operation would likely result in a large spill without the presence of a monitoring device. In such cases, use of the oil monitor should significantly increase the probability of detection or limit the spread of spilled oil through early detection. It would be economically unreasonable to require monitoring devices at all transfer facilities. For the relevant regulations, see 33 CFR 154.525.

---

14. Small Discharge Containment

The goal of this regulation is to control small leaks at connecting points until emergency shutdown or proper removal is possible. Containment under the entire hose is not required or intended. The blanking of a hose until it is connected, and the use of hoses complying with 33 CFR 154.500 requirements, should prevent most over-water spills. For the relevant regulations, see 33 CFR 154.530.

---

15. Discharge Removal

The optimum arrangement for discharge removal is a fixed drain system to remove discharges and normal precipitation from the facility. In general, the system should be either mechanically operated or gravity operated. The phrase "safely and quickly" must be considered relative to the products involved. This regulation is intended to keep large surface areas of highly volatile products, such as gasoline, from forming, and to provide a means to drain precipitate or other liquids from the containment so that the required capacity is available during the transfer. In the case of a portable containment system, its potential weight when full must be considered, and provisions must be made for emptying it. A system is unacceptable if the most likely action by the owner/operator is to drain the container into the water. For the relevant regulations, see 33 CFR 154.540.

---

16. Discharge Containment Equipment

a. Pre-transfer booming. Only unusual situations require pre-transfer booming, and COTP interpretation of this regulation should be fairly uniform.

   (1) The authority to require containment to be deployed before the transfer is mentioned specifically in this regulation, because in some cases it is the only practical way to protect the environment from particularly risky transfer operations.

   (2) For the relevant regulations, 33 CFR 154.545.

b. Time limits. Under 33 CFR 154.545(c), time limits for gaining access to oil spill containment materials must be set by the owners/operators of the facilities, subject to approval by the COTP.

   (1) The operator must take currents into account when establishing time limits for boom deployment. Although booms may not contain oil when deployed in rapid currents, they may be effective in channeling its movement, and thus protect some areas from damage.

(2) This helps ensure that equipment sharing agreements among facility owners/operators are realistic and provide for adequate response to oil discharges.

c. Equipment. Each facility must have containment equipment available, whether by direct ownership, membership in a cooperative, or prearrangement with commercial interests.

(1) Shared or contracted equipment must be located so that it can be brought on scene in a timely manner. The determination of location and timeliness should reflect local conditions; in current or tidal areas, the time to deploy will generally be less than that allowed for still water areas.

(2) In locations adjoining ecologically sensitive areas, booms may need to be set in place for each transfer operation.

(3) Each facility should be prepared to contain and remove a discharge in accordance with these regulations, the National Contingency Plan (NCP), and 33 CFR Part 153.

---

17. Emergency Shutdown 33 CFR 154.550

a. Facility to vessel. 33 CFR 154.550 applies specifically to the transfer of oil from facility to vessel. As the PIC on the vessel must be able to stop loading immediately in the event of manifold valve failure, hose failure, or overfill, the emergency shutdown mechanism should normally be located aboard the vessel.

(1) The accessibility of the shutdown mechanism is one factor the COTP will consider when authorizing single operator transfers.

(2) See 33 CFR 156.115 for the relevant regulation.

b. Alternative measures. In the event that the PIC on the vessel does not remain near the usual operating station where the shutdown controls are located, acceptable alternative measures must be provided to maintain the emergency shutdown capability. Acceptable alternatives must provide for continuous dedicated communications. An audible alarm system is not acceptable.

c. Flow closure devices. The flow closure devices actuated by the shutdown system must be located on the facility side of the hose. If their use may cause hydraulic shock to the system, the system must be capable of withstanding such shock loading. Proper closure sequencing of pumps and valves may be necessary (e.g.,

the pumps must be stopped prior to closing the pipeline to prevent rupture), and is certainly not precluded, provided the applicable time limit is met.

---

18. Communications 33 CFR 154.560

a. Two-way communications. Adequate communication between the vessel and the facility is essential to coordinate control of the transfer operation.

(1) Two-way voice communications enable each PIC hear the other.

(2) In the event that the PICs are not close enough to be easily and readily heard by voice alone, the facility must provide an effective means of communications.

(3) For single operator transfers and at facilities with low ambient noise levels, an electronic or sound powered system may not be necessary. Consideration must be given, however, to the probable location of personnel during various stages of transfer operations and in inclement weather, to ensure that two-way communications are possible.

b. Intrinsically safe radio devices. Radio devices used to comply with this regulation must be approved as intrinsically safe by either Underwriters Laboratories, Inc. (UL), Factory Mutual Research Corporation (FM), Canadian Standards Association (CSA), or MET Testing Company (MET). Intrinsically safe radios are not required on vessels certificated to carry and carrying only Grade E liquid cargoes.

---

19. Lighting 33 CFR 154.570

Adequate lighting is a prerequisite for any nighttime operation. Objective standards are needed where the COTP doubts the adequacy of lighting. Specific testing is only necessary when lighting appears inadequate to the COTP (i.e., a flashlight should not be necessary to conduct operations effectively). At small or remote facilities, where portable lights are used or illumination is provided by a tug, the shielding of lights must be specified in the operations manual and in the written directions for transfer operations.

D. REQUIREMENTS FOR VESSELS (33 CFR PART 155)

1. Applicability 33 CFR 155.100

a. Introduction. U.S. vessels must meet the applicable requirements of 33 CFR Part 155 to be issued a COI under the applicable subchapters of Title 46 CFR.

(1) Public vessels that would otherwise be exempt from compliance must meet these requirements if they are to be certificated by the Coast Guard. These include vessels operated as maritime school ships and vessels of the Navy's Military Sealift Command (MSC).

(2) Consequently, a vessel's COI will be accepted as evidence that it is in compliance with 33 CFR Part 155.

b. International Oil Pollution Prevention (IOPP) Convention Certificate. Foreign and U.S. ships are required to be surveyed for compliance with MARPOL 73/78. An IOPP Certificate, CG-5352 with the applicable IOPP Supplement Form A, CG-5352A or IOPP Supplment Form B, CG-5352B will be accepted as evidence that the vessel complies with 33 CFR Part 155 pollution prevention requirements.

c. Enforcement. Primary responsibility for enforcing the regulations for public vessels rests with the Federal agency owning and operating the vessel, not with the Coast Guard. However, consistent with its general enforcement responsibility and in the public interest, the Coast Guard will do the following:

(1) Assist the efforts of the Federal owner/operator of a public vessel certificated by the Coast Guard to comply with the pollution prevention regulations by providing information and advice.

(2) Conduct inspections and monitor transfer operations on board such a vessel only when requested and approved by the cognizant Federal agency, or during renewal of the COI.

(3) Advise other agencies of violations, when observed or reported, and of requirements that must be met to achieve compliance.

d. When a violation is observed on a certificated public vessel, the COTP must:

(1) Formally advise the responsible official of the violations;

(2) Explore all possible means of resolving the matter and achieving compliance; and,

(3) Submit relevant documentation to the district commander for disposition if compliance is not forthcoming.

e. Upon receipt of documentation from the COTP, the district commander must explore all possible means of reaching mutual agreement to achieve compliance. If this fails to resolve the situation, forward all relevant information to Commandant (CG-5P) for resolution with the parent agency.

f. Tank barges. Tank barges inspected under 46 CFR Subchapter D (Tank Vessels) or 46 CFR Subchapter O (Certain Bulk Dangerous Cargoes) for the carriage of flammable or combustible cargoes that are not considered oil need not meet the requirements of 33 CFR Part 155. In such cases, the COI should be endorsed "33 CFR 155 need not be complied with unless oil is carried." Oceangoing tank barges over 150 GT must meet the survey requirements and be issued an IOPP Certificate, CG-5352 with IOPP Supplement Form B, CG-5352B attached.

g. Permanently moored craft. For the purposes of the regulations, a craft that is permanently moored at a fixed location, so as to be "substantially a land structure" and “does not have a practical use for transportation on the water,” may be considered an integral part of the facility, or work platform. So as not to be subject to the provisions of 46 U.S.C. 3701, the craft must meet the requirements of Chapter B.4 of this Manual.

h. Vessels with containment systems. The inspection provisions do not apply to floating vessels that have flammable or combustible liquids within a containment system installed solely for compliance with 33 CFR 154.530 when such liquids would be routinely discharged to the shoreside part of the facility.

i. Floating non-tank vessels with containment systems only will not be subject to inspection under 46 U.S.C. Chapters 33 and 37. However, all on board components of such vessels, including piping, collection and holding tanks, vents, and pumps must be examined for safety and satisfactory operation as part of the facility examination referred to in 33 CFR 154.120.

---

2. Definitions 33 CFR 155.110

MARPOL 73/78 operational and equipment requirements center on whether the ship is "oceangoing" and a "new ship" or an "existing ship."

a. Oceangoing. A U.S. oceangoing ship is a vessel that is certificated for ocean service or that operates at any time beyond the U.S. territorial sea. All foreign ships are oceangoing,

except those operated exclusively within the Great Lakes or Puget Sound or their connecting and tributary waters.

NOTE: Check the applicability section of the regulations for a particular vessel type (i.e. tank vessel, OSV, small passenger vessel, etc.).

b. New or existing ship. Three dates are key to determining a vessel's status as new or existing: the vessel's contract date, keel-laying date, and delivery date.

(1). Ships with either a delivery date after 31 December 1979 or a contract date after 31 December 1975 are considered new.

(2) If the contract date is unavailable, the keel-laying date must be obtained from the ship's International Convention for the Safety of Life at Sea (SOLAS) Safety Construction Certificate. If the keel-laying date is after 30 June 1976, the ship is new.

(3) If the ship's owner/operator provides documentation that the ship's contract date was before 31 December 1975, the ship is considered existing, as the contract date takes precedence over the keel-laying date.

(4) A determination by a party nation on a specific ship's status under MARPOL 73/78 should be accepted by the local unit.

(5) The local unit must accept a party nation's determination as to whether a ship conversion is major or minor. In the absence of such a determination, the COTP should apply the definitions and interpretations in MARPOL Regulation 1.

(6) If an obvious error has been made concerning a vessel's status, the COTP should contact Commandant (CG-FAC).

---

3. Equivalents 33 CFR 155.120

Equivalents for MARPOL 73/78 requirements are only granted by Commandant (CG-5P) . MARPOL 73/78 disallows the substitution of operational methods to control the discharge of oil for a design construction feature. The equivalents granted by the United States are contained in enclosure (7) of Commandant Instruction (COMDTINST) M16450.26. Equivalents allowed by foreign countries and acceded to by the United States are contained in enclosure (8) to COMDTINST M16450.26. Refer questions concerning equivalents to Commandant (CG-FAC). It should be noted that, for vessels operating exclusively in U.S. domestic service for which the oil transfer procedures call for the use of an equivalent shore

connector, a 1.5-inch quick connect fitting is permitted. This equivalence does not apply to vessels in international service or to oceangoing vessels of 400 or more GT.

---

4. Exemptions 33 CFR 155.130

When appropriate, exemption requests forwarded to Commandant (CG-5P) must include observations or assessments of the situation from the COTP. These will aid in determining whether or not to grant an exemption. Exemption requests must be forwarded to the Commandant only when all means of alternative compliance have been exhausted.

---

5. Cargo Oil Discharge Containment 33 CFR 155.310

a. General provisions. 33 CFR 155.310 clarifies the containment requirements for hoses and loading arms and to require the specified capacity in all conditions of vessel list or trim during the transfer operation.

(1) Only barges have the option to use a coaming in lieu of a large containment system. This option exists because the deck construction on many barges makes large, fixed containment impractical or unsafe. Generally, however, coamings installed around the periphery of a vessel should not be allowed in lieu of containment.

(2) The safety problems in utilizing the total deck enclosure for containment include conditions of list or trim, rain accumulation, required methods of product removal, fire hazards, structural considerations, and personnel safety. A coaming that is used in lieu of a fixed containment system must be able to keep spilled oil within the coaming and portable containers until properly drained or removed, without discharge into the water.

b. Drainage.

(1) Acceptable mechanical means of drain closures include valves, threaded caps or plugs, or solid stoppers (e.g., rubber plugs) in conjunction with concrete (provided the concrete remains sound.) Concrete, plastic or wooden plugs alone, or rags in any fashion, are unsuitable. The present requirements of 46 CFR 35.35-10 for plugging general deck scuppers remain valid.

(2) Drainage installations should be compatible with existing regulations, which require a check valve in the drain line if flammable liquids are carried and there is a direct connection of the line to a cargo tank.

(a) Drains need not be piped to cargo tanks.

(b) Alternative means of containment drainage must not create a potential for discharge. A drainage system will not be accepted when the most likely result is discharge of oil into the water or the bilges of auxiliary spaces, or the mixing of incompatible products.

(c) Use of collection tanks is encouraged; pumping of contained oil into portable drums or containers is discouraged. Arrangements between the vessel and the facility for removal of oil spilled into containment systems must be undertaken in a timely manner.

---

6. Fuel Oil and Bulk Lubricating Oil Discharge Containment 33 CFR 155.320

a. Applicability. 33 CFR 155.320 requires containment when lube oil is transferred and carried in bulk as stores for consumption by the vessel. This section generally applies to the area immediately surrounding the fueling station and associated vents. It does not apply to--

(1) The vent header system;

(2) Flush deck fittings, even though they are raised slightly off the deck to prevent the entry of water; and

(3) Vents for small, independent, auxiliary fuel tanks, such as used on barges for pump drive engines, when the tank is designed to be filled with a back flow shut-off nozzle or similar arrangement.

b. 33 CFR 155.320 applies to fuel tank vents fitted with goosenecks as opposed to straight-type vents, which are common on foreign vessels. Most straight-type vents will discharge oil in a 360-degree horizontal pattern that rules out the use of portable containers. Using the bulwarks to keep the oil on the vessel and relying on coamings or plugged scuppers to contain the discharge is unacceptable. Generally, straight vents will require fixed containment around the vent head or modification of the vent itself.

c. Piping arrangements. Unusual or complex piping arrangements on existing vessels need not be retrofitted if, in fueling the vessel, an equivalent level of protection can be demonstrated (see 33 CFR 155.

(1) For example, regulations suggest the use of external containers. However, devices built into a vent line or a system to contain the required amount of oil, while still permitting the vent to function, will satisfy these requirements. Vent header systems that lead to a final tank for containment are also acceptable.

(2) Alternative procedures, methods, or equipment standards must be clearly explained in the oil transfer procedures for the vessel.

(3) This requirement for containment under fuel oil and bulk lubricating vents does not apply to fixed or floating drilling rigs and other platforms.

NOTE: Such devices must be brought to the attention of marine chemists and must be capable of gas-freeing.

d. Capacity requirements. In general, the capacity of the required fixed discharge containment for fuel oil and bulk lubricating oil vents, overflows, and fill pipes is the volume as specified in 33 CFR 155.320, for each vent, overflow, etc. On some cases, one fixed discharge containment may suffice for more than one such vent, overflow, or fill pipe.

(1) In determining whether the required capacity for a single fixed containment is adequate for a group of vents, overflows, or fill pipes, the distance between the individual devices must be considered along with the location of associated tanks, related piping configurations, etc.

(2) The final containment design must ensure that containment provided for a group of vents, overflows, etc., has the capability to retain expected discharges.

---

7. Bilge Slops/Fuel Oil Tank Ballast Water Discharges Aboard U.S. Non-Oceangoing Ships 33 CFR 155.330

a. Oily wastes and bilge slops. Most vessels have a waste or slop oil tank. All vessels must have the ability to retain oily waste and oily bilge slops aboard.

(1) Use of the bilge itself is acceptable on vessels that have essentially dry bilges, which collect only small quantities of machinery oil drippings.

(2) Vessels with wet bilges that are essentially oil-free need not provide a special tank for bilge water disposal. Such arrangements in no way constitute an exemption from assessment of a penalty for discharging a harmful quantity of oil.

b. Discharge of oily wastes and bilge slops. Proposals to pump oily wastes and oily bilge slops to fuel tanks or ashore through the bunkering lines have been accepted when proper safeguards have been incorporated.

(1) The acceptance of such proposals has raised questions regarding the applicability of 46 CFR 56.50-50(h). 46 CFR 56.50-50(h) may be revised to permit the discharge of oily wastes and bilge slops to fuel tanks and tanks ashore through bunkering lines.

(2) The system must be arranged to preclude the discharge of fuel into the bilge system. Normally, double-check valves (one of these being a stop check valve) will be required between the bilge pump discharge and the bunkering line or fuel tank. The discharge to the fuel tank must enter at the top of the tank, if possible.

(3) The requirement to have an oily residue (sludge) tank does not apply to non-oceangoing U.S. vessels.

---

8. Bilge Slops/Fuel Oil Tank Ballast Water Discharges on Oceangoing Ships of Less Than 400 GT 33 CFR 155.350

Ships in this category must either retain all oily mixtures aboard and be equipped to discharge them to a reception facility, by fixed or portable means, or have approved oily-water separating equipment. Commandant (CG-CVC-2) should be contacted to verify that an Oily-Water Separator (OWS) has been approved by the International Maritime Organization (IMO). Ships in this category are not required to have a bilge alarm or bilge monitor installed. Ships failing to have the applicable equipment aboard should be processed for civil penalty assessment. For vessels with separating equipment installed but inoperative, civil penalty proceedings should be used if reasonable efforts have not been made to make repairs. The ship should be detained in port until the discrepancy is corrected.

a. U.S. self-propelled ships of less than or equal to 400 GT. U.S. self-propelled ships of less than or equal to 400 GT may retain all oily mixtures on board in the ship's bilges. An oily residue (sludge) tank is not required.

b. Non-self-propelled ships with auxiliary machinery of less than 2,000 Horse Power (HP). Non-self-propelled vessels outfitted with machinery of less than 2,000 HP typically do not present a significant risk of oil pollution from the machinery space bilges. These vessels are not usually fitted with a large number of through-hull fittings. These types of vessels generally do not employ large amounts of water for cooling and steam plant operation. Therefore, these vessels usually have a minimal amount of water in their bilges.

c. Equivalency. An equivalency has been established between a non-self-propelled barge with installed auxiliary machinery and a total output of less than 2,000 HP in spaces protected by bilge pumping and a self-propelled ship of 400 GT or less.

(1) Barges eligible for the equivalency need not have OWS if they comply with the requirements set forth in 33 CFR 155.420(a) for oily bilge slop retention and shore discharge pumping, piping, and discharge connections for oceangoing ships of less than 400 GT but greater than or equal to 100 GT.

(2) As required by 46 CFR 56.50-5(e), drip pans must also be installed on inspected vessels under any equipment subject to normal oil leakage.

d. Equivalency requests for barges should be evaluated for eligibility under approved equivalency for barges with auxiliary machinery with a total output of less than 2,000 HP. The OCMI may authorize an eligible barge for which the owners choose not to install an OWS, to be operated in accordance with the approved equivalency by making the following entry in paragraph 6.1 of the IOPP Supplement Form A, CG5352A (or Paragraph 10.1 of IOPP Supplement Form B, CG-5352B, if applicable): "2.2, 2.3, and 3 - the machinery space pollution potential of this vessel is equivalent to that of ships of less than 400 gross tons. The vessel is therefore outfitted to comply with the requirements of Regulations 9(2). All oil and oily wastes must be retained on board for discharge to reception facilities."

---

9. Bilge Slops Discharges- Oceangoing Ships Greater than 400 GT, but less than 10,000 GT, Excluding. Ships That Carry Ballast Water in Their Fuel Oil Tanks

Oceangoing ships greater than 400 GT, but less than 10,000 GT, excluding. ships that carry ballast water in their fuel oil tanks must have, at a minimum, an OWS capable of producing an effluent of less than 100 ppm of oil. They must also have a tank for oily residues (sludge) that cannot be handled through the OWS. Additionally, these vessels must have pipelines installed for the discharge of oily mixtures to waste reception facilities. For the relevant regulations, see 33 CFR 155.360.

---

10. Bilge Slops/Fuel Oil Tank Ballast Water Discharges on Oceangoing Ships greater than 10,000 GT, and Oceangoing Ships greater than 400 GT That Carry Ballast Water in Their Fuel Oil Tanks

Oceangoing ships greater than 10,000 GT and oceangoing ships greater than 400 GT that carry ballast water in their fuel oil tanks must also have an approved bilge monitor or alarm in addition to an approved OWS. If the vessel owner chooses a system with an approved bilge monitor, the continuous monitor record must be maintained aboard the vessel for three years from the date of the last entry on that record. For the relevant regulations, see 33 CFR 155.370.

---

11. OWS Equipment, Bilge Alarm, and Bilge Monitor Approval Standards

Commandant (CG-CVC-2) should be contacted when there is a question concerning such equipment approved by the IMO. For the relevant regulations, see 33 CFR 155.380.

---

12. Pumping, Piping, and Discharge Requirements for Oceangoing Ships of Greater Than 100 GT but Less Than 400 GT

This regulation requires a means on the weather deck of near the discharge outlet to stop each pump that is used to discharge oily wastes. This requirement applies to oceangoing ships of greater than 100 GT but less than 400 GT and may be satisfied by an installed pressure switch that shuts down the pump that is discharging oily wastes when the stop valve is closed. For the relevant regulations, see 33 CFR 155.420.

---

13. Placard

The placard must be posted as specified in 33 CFR 155.450 in any machinery space that generates or collects oily waste (e.g., auxiliary spaces on unmanned barges). Pleasure boats 26 feet or more in length must also comply with this provision.

---

14. Prohibited Oil Spaces

33 CFR 155.470 applies to all self-propelled vessels. Where collision bulkheads are not fitted, the requirement applies to the forward most continuous bulkhead.

---

15. Designation of PIC

The vessel operator or his or her agent must designate in advance, individuals who may serve as PICs; a current list of such individuals should be available. The person who signs the Declaration of Inspection (DOI) described in 33 CFR 156.150 is the PIC until his or her relief signs the DOI. For the relevant regulations, see 33 CFR 155.700.

---

16. Oil Transfer Procedures

33 CFR 155.720 requires that written directions for oil transfer operations be aboard whenever the vessel is in service, although they are only used during transfer operations.

33 CFR 155.720(b) was added because the Coast Guard has documented spills from fuel day tank transfers, cargo tank transfers, and other internal vessel transfers. The Pollution Incident Reporting System (PIRS) documented approximately 140 spills per year from such transfers from 1973-1977. The written procedures for internal vessel oil transfers need not be as complex as those for cargo or fuel transfers to a facility or another vessel; however, they should be available for reference before and during internal transfers. For the relevant regulations, see 33 CFR 155.720.

---

17. Availability of Oil Transfer Procedures 33 CFR 155.740

a. General. The goal of 33 CFR 155.740's requirements is to ensure that vessel personnel involved in oil transfer operations know the necessary procedures, regardless of language differences. All procedures must be legibly printed in a language understood by personnel engaged in transfer operations.

(1) Vessel owners and operators may decide what crews to hire, but whoever supervises the transfer must be able to perform with minimal risks of pollution.

(2) Transfer procedures need not be posted on unmanned tank barges, but must be readily available to transfer personnel.

(3) On tank vessels, detailed data and procedures need not be permanently posted, but must be kept aboard the vessel in a place that is accessible to personnel involved in the transfer.

b. Posted procedures. Directions for transfer operations, which must include the information required by 33 CFR 155.750, should be written to be posted; no separate manual is necessarily required.

(1) Such directions are not intended as training manuals for tankermen, but they must explain any abnormal or complicated instructions so that the transfer system may be operated safely.

(2) On an unmanned tank barge, for example, a simple line drawing of the piping arrangement showing any unique features and properly labeled, may suffice.

(3) Emergency phone numbers must also be included in these procedures.

---

18. Contents of Oil Transfer Procedures 33 CFR 155.750

33 CFR 155.750 requires detailed information for the oil products transferred to or from a vessel. The regulation's intent is to ensure that the pollution prevention regulations are applied to all oil products transferred in bulk. Tank barges have had difficulty keeping oil cargo information on board due to space limitations. This is also because 33 CFR 155.750(a)(1) has been strictly interpreted to require a separate cargo information card for each cargo for which the barge is certificated. As 33 CFR 155.750 is intended to ensure the tankerman or PIC has information on the hazards and correct handling of the products he or she is handling, information cards for product transferred to or from the vessel are required. Cargoes with similar characteristics can be listed together on one information card for convenience; however, those cargoes with significantly different characteristics (such as different grades) should be listed separately. Marine safety personnel should--

a. Point out essential cargo information, such as special hazards, if the cargo is different from oil, and procedures for oil spills;

b. Allow summary data where feasible; and

c. Allow revision of the procedures under 33 CFR 155.760 when legitimate problems arise in existing procedures.

---

19. Emergency Shutdown

33 CFR 155.780 addresses the transfer of oil from a vessel to a facility or to other vessels. Installation of additional remote shutdown stations may be necessary, depending upon the movements of the PIC during the transfer. In lieu thereof, consideration may be given for use of appropriate portable radio communications between the PIC and the crewmember located at the remote shutdown station.

---

20. Communications

33 CFR 155.785 requires continuous communications with all parties involved with the transfer operation to ensure that rapid shutdown of an oil transfer is possible. Voice communications may not be sufficient, due to ambient noise levels in the area or distance between PICs.

---

21. Deck Lighting

To ensure pollution-free operation, the vessel is responsible for providing illumination consistent with the requirements of 33 CFR 154.570. The adequacy of existing vessel cargo deck lighting will normally be determined by practical demonstration. Verification by instruments may be required in questionable instances. For the relevant regulations, see 33 CFR 155.790.

---

22. Tank Vessel Security

Notwithstanding the provisions of 46 CFR 35.05-15(b), moored tank barges must be kept under surveillance when they are not gas free. Boarding officers must assess each situation to ensure that local procedures satisfy the requirement for vessel security in the particulars of mooring/berthing facilities, location of personnel acting as watchmen, environmental considerations, and other factors. For the relevant regulations, see 33 CFR 155.810.

---

23. Tank Vessel Integrity

The openings listed in the regulation must be tightly shut, except as allowed by 33 CFR 155.815(b), to prevent the entry of water or loss of oil. Tank vessels with oil cargo or oil residue aboard while in U.S. navigable waters or the contiguous zone must comply with 33 CFR 155.815. Tank vessels that are gas-freed are not covered by 33 CFR 155.815. For the relevant regulations, see 33 CFR 155.815.

---

24. Records

Records that must be maintained and "available for inspection by the COTP or OCMI" must be readily available to Coast Guard personnel. In the case of unmanned tank barges, such records will generally be kept with the vessel's COI. The licensed officer or certificated tankerman required by 33 CFR 155.700 who will conduct the transfer operation in each locale must be listed in the records. For the relevant regulations, see 33 CFR 155.820.

E. REQUIREMENTS FOR TRANSFER OPERATIONS INVOLVING VESSELS (33 CFR PART 156)

1. Applicability

Government-owned vessels engaged in commerce are subject to the requirements of 33 CFR Part 156. Other public vessels are usually required by agency guidelines to meet or exceed the requirements of 33 CFR Part 156.

Transfers of oil to, from, or within a vessel are regulated if the vessel has a capacity of 250 barrels or greater of <u>that</u> oil (including internal fuel and lube oil transfers, which have been the source of numerous spills in the past).

The word "that" is emphasized to draw attention to its presence in 33 CFR 156.100 (also 33 CFR 154.100). This regulation is not meant to apply to a vessel with a cumulative on board capacity of 250 or more barrels of oil, but rather to vessels with an on board capacity of 250 or more barrels of a specific type of grade of oil.

For the relevant regulations, see 33 CFR 156.100.

2. Suspension Orders

33 CFR 156.112 allows for issuance of rapid suspension orders when conditions threaten an imminent discharge of oil.

33 CFR 156.112 allows for the suspension of transfer operations if Coast Guard personnel are not allowed access to inspect the operation to verify compliance.

The COTP or OCMI must be advised immediately of any action to suspend a transfer operation (in most cases, he or she is consulted prior to any suspension order). In any event, the operator is free to immediately contact the COTP or OCMI to question the suspension order or to advise of corrective action to have the order lifted.

For the relevant regulations, see 33 CFR 156.112.

3. PICs: Limitations 33 CFR 156.115

a. The facility and each vessel involved should have a PIC during an oil transfer unless the COTP determines that there is no increased risk of pollution in single-operator transfers involving more than one vessel.

b. When determining whether to grant a request for a single-operator transfer, the COTP should consider the following:

(1) Under specified or controlled conditions, can one person effectively perform all required operations at the facility in question?

(2) How complex is the operation? What degree of mechanization is available to assist the operator?

(3) Can one PIC operate the emergency shutdown for each transfer and respond to spills adequately?

(4) What has been the past performance of the facility?

c. Mooring two adjacent barges manifold-to-manifold may be an acceptable arrangement for a single-operator transfer, mooring them end-to-end, which places the manifolds a considerable distance apart, may be unacceptable (see Paragraph 31.C.17 above). Such requests should not be referred to Commandant (CG-5P) as exemption requests under 33 CFR 156.110.

---

4. Requirements for Oil Transfer

a. General. Vessel and facility owner/operators are responsible for the actions or inactions of their employees. It is also the vessel and facility owner/operator's responsibility to train personnel and ensure their compliance with safety and environmental standards. Because personnel error is a predominant cause of oil spills, training and personnel compliance are essential to any pollution prevention program. For the relevant regulations, see 33 CFR 156.120.

b. Vessel moorings (33 CFR 156.120(a)). The intent of this CFR paragraph's requirements is for mooring lines to be regularly checked throughout the transfer operation, to prevent the parting of hoses that could lead to an oil spill.

(1) If the PIC of a vessel or facility is not satisfied with the intended operation at the pretransfer conference, the transfer must not proceed until such time as the process is clearly understood and accepted.

(2) In crew or watch changes during cargo transfers, the oncoming crewmember should ensure that all provisions of the DOI are being met; when he or she signs the form, he or she becomes the PIC.

c. Fixed and portable transfer systems. 33 CFR 156.120(g)

(1) Due to static electricity combustion hazards produced by free-falling Grade D and E cargoes and the health hazard from fumes posed to personnel in the cargo hold above the deep tank, loose hose transfers over hatch tops are not permitted.

(2) The term "fixed connection" means the fixed cargo piping system installed on the vessel. In cases where the fixed cargo piping system does not exist, or where it is impossible or undesirable to use this system, the COTP should consider granting an alternative under 33 CFR 156.107 to allow use of a portable transfer system. This system should consist of the following:

(a) A hose that meets the requirements of 33 CFR 154.500 or portable piping that meets the requirements of 46 CFR Part 56.

(b) Connections that meet the requirements of 33 CFR 156.130.

(c) A closure, such as a manhole cover, Butterworth plate, or flange; or deepwell pump stack that forms a vapor tight seal over the opening in the tank top through which the cargo is transferred. This closure should be bolted or dogged in place, and the hose and drop line should be connected to it.

(d) A metallic drop line that meets the requirements of 46 CFR 153.282 (not necessary for transferring Grade E, edible, vegetable, or animal oils).

(e) A drip pan of at least 1/2-barrel capacity under each connection on the weather deck or ashore.

(f) A shutoff valve at or near the point of entry into the tank.

(3) The alternative of a portable transfer system should be restricted to transfers of Grade D and E cargoes. However, approval has previously been given by Commandant (CG-ENG) to certain parcel chemical tankers for transfer of cargo by this method. Continued acceptance should be considered for such vessels.

d. Securing of certain discharge and sea suction valves. 33 CFR 156.120(h) prohibits simultaneous cargo transfer and ballasting or deballasting of cargo tanks, except for specific circumstances set forth in 33 CFR Part 157 that are consistent with MARPOL 73/78. These are--

(1) Ballasting or deballasting of Segregated Ballast Tanks (SBTs) because the pump and piping system are separate from the cargo system;

(2) Ballasting or deballasting of dedicated Clean Ballast Tanks (CBTs), in accordance with 33 CFR 157 or where an independent ballast system for CBTs is installed; and,

(3) Simultaneous ballasting and cargo discharge, in accordance with 33 CFR Part 157, to prevent hydrocarbon vapor emissions on a tank vessel with a Crude Oil Washing (COW) system. The goal is to prevent accidental mixing of ballast water and cargo oil or loss of oily mixtures to the water.

e. Hose requirements. According to 33 CFR 156.120(j), if the first fabric layer (the "breaker" layer) is loosely woven and primarily intended to aid in bonding the cover to the rest of the hose, it is not considered a reinforcement layer. Hose repairs are allowed, provided the reinforcement is not penetrated, there are no leaks, and the repaired hose meets the testing requirements in 33 CFR 156.170.

f. Emergency shutdown mechanism. 33 CFR 156.120(r) is meant to ensure that the equipment is operable. This does not always require triggering the device.

g. Duties of personnel. 33 CFR 156.120(t)(1) clarifies that the PIC must be able to supervise all personnel during transfer operations.

(1) "At the site", as it is used in 33 CFR 156.120(t)(1), means that the transfer point is in view and that the PIC is in a position to supervise the overall transfer operation and to respond to emergencies immediately.

(2) The requirements in 33 CFR 156.120(t) and (u) may appear similar but are not redundant. 33 CFR 156.120(t) applies to the PIC, while 33 CFR 156.120(u) requires all personnel on duty to comply with transfer guidelines. However, if a PIC is engaged in a single-operator transfer, he or she must comply with the requirements of both 33 CFR 156.120(t) and (u).

(3) In making crew or watch changes, oncoming crewmembers must ensure that all provisions of the DOI are met. By signing the DOI, the oncoming PIC assumes responsibility for the transfer from that point on.

h. Communications. 33 CFR 156.120(v) does not require PICs to speak English, but it does require these persons to be able to speak to each other directly or through an interpreter who is continually present (this assumes that each, in turn, can communicate with his or her subordinates).

---

5. Discharge Cleanup

The goal of 33 CFR 156.125 is to control the spread of oil and to check its source before resuming transfer operations. COTP authorization is required for resumption of normal transfer operations but not for the removal of discharged oil from the water and its return to proper storage. As long as removal by the spiller is performed properly, the COTP will not interfere in the cleanup operations. There should be no spills or leaks in the work area during transfer operations. A leak into containment devices is not considered a discharge into the water; stopping a leak without halting the transfer may be sufficient. However, the specified containment capacity must be available throughout the transfer operation.

---

6. Declaration of Inspection (DOI)

33 CFR 156.150(f) requires operators of vessels and facilities to keep a copy of the DOI aboard for one month. When vessels (particularly unmanned barges) operate in a relatively limited area and conduct many transfers per month, so that unreasonably large numbers of DOIs would accumulate, the COTP may permit the vessel operator to keep only the DOI from the last transfer aboard. In most cases, the COTP will be concerned only with the most recent transfer that may have caused a spill. If more information is required, the facility copy of the DOI is available for one month (in all but vessel-to-vessel transfers). Should a problem arise with a particular vessel, the COTP should monitor the vessel's operations directly, rather than rely upon the DOI, to verify routine compliance. The requirements of 46 CFR 35.35-30 will be revised to ensure compatibility with the DOI requirements of 33 CFR 156.150. The ship/shore safety checklist from the International Oil Tanker and Terminal Safety Guide, sufficiently expanded to include the requirements of these regulations, is acceptable. For the relevant regulations, see 33 CFR 156.150.

---

7. Supervision By PIC

If the PIC must use a shelter during transfer operations in bad weather, the shelter must allow proper observation and supervision of the transfer and unimpeded operation of the emergency shutdown mechanism. For the relevant regulations, see 33 CFR 156.160.

---

8. Equipment Tests and Inspections

a. Introduction. The high pressure test required by 33 CFR 156.170 is intended to expose a weakness or leak under controlled conditions, so that corrective action can be taken before a spill.

(1) Testing to 1.5 MAWP is standard engineering practice and does not damage or destroy a hose in good working condition.

(2) On the other hand, testing only to MAWP is not a conclusive indicator of hose condition and is not suitable to determine that a hose is safe for transfer operations.

b. Transfer piping systems.

(1) A vessel's oil transfer pipe system includes the discharge pump and piping or hose between the pump and the vessel's deck manifold (which connects to the facility or other vessel's transfer system). The portions of the vessel's oil transfer pipe system, not including nonmetallic hose(s), must be tested annually to a minimum of 1.5 times the MAWP of the pipe system.

(a) In this instance, the MAWP can be assumed to be either the pressure at which the transfer piping relief valve is set or, where no relief valve(s) are fitted, the maximum discharge pressure including hydraulic shock that can be developed by the vessel's pump.

(b) For centrifugal pumps, this is the pressure developed by the pump at zero flow conditions, i.e., pump shutoff head.

(c) All nonmetallic cargo hose(s) used on a vessel as part of its oil transfer system must also be tested to 1.5 times its MAWP, which will be a minimum of 1,552 kPa per 33 CFR 155.800 and 156.170(c)(1).

(2) The test pressure for facility transfer piping and loading arm(s) under 33 CFR 156.170(c)(4) is 1.5 times the MAWP.

(a) This test pressure may be less than 1,552 kPa if the facility operator can demonstrate to the COTP's satisfaction by written procedures in their operations manual that the facility uses an operating pressure or relief valve setting of less than 1,034 kPa.

(b) The hose that runs between the facility's manifold and the vessel's deck manifold is separate and distinct from the facility "oil transfer pipe system" and must be tested to 1.5 times the hose's MAWP but not less than 1,552 kPa. This figure represents 1.5 times a MAWP of at least 1,034 kPa, required for facility oil hose assemblies under 33 CFR 154.500.

(c) A facility oil transfer system extends from the last valve inside the containment required by the EPA through the transfer pipe to the loading arm or manifold. (See 40 CFR Part 112.)

c. Acceptance of alternative cargo piping test pressures for vessels. Achieving test pressures of 150% MAWP for annual cargo piping tests on tank vessels is often impractical while vessels are in service, where transfers are conducted by vacuum or suction method, or outside the shipyard where special equipment is not available. Therefore, as provided by 33 CFR 156.107, alternative test pressures of not less than 100% MAWP may be used for in-service annual cargo piping tests, provided that a 150% MAWP test of the cargo piping is conducted at least twice in any 5-year period.

(1) The Coast Guard envisions that the 150% MAWP tests will be conducted during drydock periods at the discretion of the vessel owners or operators. Those vessels with longer drydock intervals must make arrangements to conduct the 150% MAWP tests at least twice in any 5-year period.

(2) All alternative test pressures must provide an equivalent level of safety and protection from pollution. Accurate records of the required tests must be maintained aboard the vessel. These records must be made available to the OCMI or COTP upon request.

(3) An alternative to the 150% MAWP test of hoses should not normally be granted. Sections of piping that cannot be tested without pressurizing cargo tanks, must not be pressure tested due to the possibility of causing structural damage aboard the vessel. These sections of piping must be visually examined during periods of availability.

F. MARINE SANITATION DEVICE (MSD) REGULATIONS

1. Authority

The EPA issued regulations on 29 January 1976 to revise federal standards for MSDs. These regulations, 40 CFR Part 140, apply to all vessels aboard which toilet facilities have been installed. Under the authority of Section 312 of the FWPCA (33 U.S.C. 1322), the Coast Guard issued regulations to implement the EPA's MSD standards on 12 April 1976. These regulations, 33 CFR Part 159, establish operating procedures and design and construction requirements for all MSD, and apply to all MSD manufacturers as well as all vessel owners and manufacturers. These regulations do not require installation of MSDs aboard vessels that have no toilets at all.

2. Definition

The term "Marine Sanitation Device" (MSD) includes any equipment for installation aboard a vessel that is designed to receive, retain, treat, or discharge sewage. It does not include portable devices (i.e., those that can be carried on and off the vessel). 33 CFR Part 159 became effective on 30 January 1977 for new vessels, and on 30 January 1980 for existing vessels (see 33 CFR 159.3 for definitions).

3. State Requirements

Vessels complying with 33 CFR Part 159 are not subject to state or local MSD requirements. However, a state may prohibit discharge of all sewage from vessels within any or all of its waters by obtaining an EPA determination that adequate shoreside facilities for the safe removal and treatment of sewage are reasonably available for such waters in which the prohibition would apply. In such waters, vessels must secure all flowthrough MSDs to prevent any discharge into the water.

4. Certification of MSDs

a. General procedures. All MSDs must be certified by the Coast Guard.

(1) If the MSD was built before 30 January 1976, it is considered an existing device. MSDs in this category (except no-discharge devices built before 30 January 1975) were certified by an official letter from the Commandant.

(2) No-discharge devices built after 30 January 1975 were certified by 33 CFR 159.12(b) without need for a letter; however, some manufacturers requested and received a letter in the certification process.

(3) Currently, if the device was manufactured on or after 30 January 1976 and is Coast Guard certified, it will have a label to this effect (except for certain no-discharge devices).

b. Labeling. No-discharge devices used solely for the storage of sewage and flushwater at ambient pressure and temperature may be certified by definition. See 33 CFR 159.12(a).

(1) Devices certified in this manner cannot be automatically labeled by the manufacturer; however, upon Coast Guard certification of the devices, labels identifying them as such may be attached.

(2) Such labels give the certification number and indicate whether the devices have been type-approved for inspected or uninspected vessels. See Chapter C2 of this Manual concerning inspection of MSDs.

A. AUTHORITIES

1. Magnuson Act, 50 U.S.C. 191

The Magnuson Act authorizes the safeguarding of U.S. harbors, ports, waters, vessels and waterfront facilities and all territory and water, continental or insular, subject to the jurisdiction of the United States whenever the security of the United States is endangered.

2. Ports and Waterways Safety Act (PWSA) of 1972, 33 U.S.C. 1221-1232(a)

The Ports and Waterways Safety Act (PWSA) of 1972 promotes safety and the environmental quality of ports, harbors, waterfront areas, and navigable waters of the United States (including the District of Columbia, Puerto Rico, the Panama Canal Zone, Guam, American Samoa, the Virgin Islands, and the Trust Territory of the Pacific Islands). The Secretary of Transportation has been given broad authority to take action to prevent damage to, or the destruction or loss of, any vessel, bridge, or other structure on or in U.S. navigable waters, or any land structure or shore area immediately adjacent to those waters; and to protect the navigable waters and resources therein from environmental harm resulting from vessel or structural damage, destruction, or loss. A 1986 amendment added 33 U.S.C. 1226, which provided the Secretary authority to "carry out or require measures, including inspections, port and harbor patrols, the establishment of security and safety zones, and the development of contingency plans and procedures, to prevent or respond to acts of terrorism."

3. Section 311 of the Federal Water Pollution Control Act (FWPCA), 33 U.S.C. 1321

Section 311 of the FWPCA prohibits discharges of oil or hazardous substances in quantities that may be harmful into or upon the navigable waters of the United States and adjoining shorelines. This section of the FWPCA also prohibits discharge of such quantities of oil or hazardous substances into or upon the waters of the contiguous zone, into waters connected with activities subject to the Outer Continental Shelf Lands Act (OCSLA) or the Deepwater Port Act (DPA) of 1974 or so as to affect natural resources belonging to, appertaining to, or under the exclusive authority of the United States, including resources under the Fishery Conservation and Management Act of 1976. The FWPCA directed the President to determine those quantities of oil and hazardous substances that, when discharged, may be harmful to the public health, welfare or environment of the United States. He was authorized to delegate the administration of the act to those Federal departments and agencies that he determined to be appropriate. The President delegated these functions by Executive Order (E.O.) 12777, dated 18 October 1991.

4. Outer Continental Shelf Lands Act (OCSLA), 43 U.S.C. 1331-1356

This statute, as amended, provides, in part, that the Secretary may promulgate and enforce reasonable regulations with respect to lights and other warning devices, safety equipment, and other matters relating to the promotion of safety of life and property on the artificial islands and structures located on the Outer Continental Shelf (OCS) or in adjacent waters. The Secretary has delegated this authority to the Commandant, who promulgated the safety regulations now contained in 33 CFR Parts 140-147.

---

5. Hazardous Materials Transportation Act (HMTA), 49 App. U.S.C. 1801-1819

The HMTA authorizes the Secretary to inspect shipments of hazardous materials to ensure their safe movement in domestic and international transportation. Originally promulgated in 1975, this act was significantly changed by a 1990 amendment. This act and the regulations published in 49 CFR under its authority, apply to packaged cargoes (including tank trucks and rail cars) on waterfront facilities but not to the facilities themselves. This act also provides the statutory authority for the regulations in 46 CFR Part 148, which govern the transportation of bulk solid hazardous materials.

---

6. E.O. 10173, as amended by E.O.s 10277, 10352, and 11249

These E.O.s, issued pursuant to the Magnuson Act, 50 U.S.C. 191, prescribed certain port security regulations to be enforced by the Coast Guard. These Coast Guard regulations are in 33 CFR Part 6. The Commandant was further authorized to issue supplemental regulations to carry out this program. These orders provide authority to prevent both intentional and accidental loss or destruction of vessels or waterfront facilities. In the past, these orders have been used for the prevention of accidental losses (port safety); however, their primary intent is the prevention of intentional losses (port security).

---

7. E.O. 12777

E.O. 12777 delegated to the Secretary of the Department in which the Coast Guard operates, authority under the FWPCA for "the establishment of procedures, methods, and equipment and other requirements for equipment to prevent discharges of oil and hazardous substances from vessels and transportation related onshore and offshore facilities, and to contain such discharges." The regulations for marine oil and hazardous material transfer facilities and oil and hazardous material transfer operations (33 CFR Parts 154-156) are promulgated, in part, under this authority. The Administrator of the Environmental Protection Agency (EPA) is charged with determining those quantities of oil and hazardous substances that may be harmful and those that are not.

---

8. Regulations

a. 33 CFR 6.12 authorizes COTPs to supervise and control the transportation, handling, loading, discharging, stowage, or storage of hazardous materials on board vessels under certain conditions.

(1) The Commandant is authorized to designate waterfront facilities for the handling, storage, and loading and discharging of explosives, flammable or combustible liquids in bulk, and other dangerous articles.

(2) The Commandant also has the authority to require permits for such handling, storage, loading, and unloading.

(3) Under 33 CFR 6.14, the Commandant is authorized to prescribe conditions and restrictions relating to the safety of waterfront facilities and vessels in port, as he deems necessary.

b. 33 CFR Part 126. To implement 33 CFR 6.12 and 6.14, the Commandant promulgated 33 CFR Part 126 (Handling of Explosives or Other Dangerous Cargoes Within or Contiguous to Waterfront Facilities).

(1) These regulations designate types of waterfront facilities, permit requirements, and conditions that must be met and maintained by facilities involved in the handling, storage, loading, or discharging of explosives, blasting agents, oxidizers, radioactive materials, certain liquefied gases in bulk, or other dangerous articles.

(2) Although these regulations were initially issued under the Magnuson Act, they were reissued in 1977 under authority of the PWSA. The civil and criminal penalties of the PWSA now apply to these facility regulations.

c. 33 CFR Part 127 applies to all waterfront facilities that transfer Liquefied Natural Gas (LNG), in bulk, to or from vessels.

(1) 33 CFR Part 127 was issued in 1988 under authority of the PWSA.

(2) 33 CFR Part 127 specifies standards for facility design, construction, equipment, operations, maintenance, training, firefighting, and security.

d. 33 CFR Parts 154 and 156 apply to all onshore and offshore facilities capable of transferring oil or liquid hazardous material, in bulk, to or from any vessel with a capacity of 250 or more barrels (about 40 cubic meters) on the navigable waters or contiguous zone of the United States.

e. Additional regulations. There are various references to waterfront facilities in Titles 46 and 49 of the CFR. The regulations under 49 CFR Parts 171-179 were promulgated under the authority of the HMTA.

B. DEFINITIONS

1. Waterfront Facility

The definition of what constitutes a waterfront facility varies depending upon the authorizing legislation and regulations. In general, a waterfront facility is a pier, wharf, dock or similar structure to which a vessel may be secured. Any equipment on the structure, any buildings on or contiguous to the structure, and any equipment or materials on the structure or in those buildings are also considered part of the facility. Structures, buildings, and equipment used in conjunction with pier equipment, but not within the areas described above, do not fall within the meaning of a waterfront facility. For example, storage tanks located beyond the immediate area of a pier facility, which are separate and distinct units connected to the pier facility only by pipeline, are not considered parts of the facility. Tanks located on a wharf are considered part of the facility, and jurisdiction applies to them. Specific limitations by authorizing legislation are as follows:

a. Magnuson Act, 50 U.S.C. 191. For the purposes of the Magnuson Act, a waterfront facility includes any pier, wharf, dock or similar structure to which vessels may be secured. Areas of land or water in immediate proximity to such structures, equipment on the structure, and buildings on or contiguous to the structure are also considered part of the facility.

b. PWSA, 33 U.S.C. 1221-1232(a). Although not specifically defined in either the PWSA, a waterfront facility includes any structure located in, on, or adjacent to the navigable waters of the United States and any land structure adjacent to the navigable waters of the United States. Areas of land or water in immediate proximity to these structures (piers and wharves), buildings on or contiguous to these structures, and any equipment or materials (including vehicles) on or in these buildings or structures, are also considered part of the facility.

c. FWPCA, 33 U.S.C. 1321. For the purposes of the FWPCA, a waterfront facility includes any onshore facility" or "offshore facility" as defined in the act.

(1) An "onshore facility" is any facility (including, but not limited to, motor vehicles and rolling stock) of any kind located in, on, or under any land within the United States other than submerged land.

(2) An "offshore facility" is any facility of any kind located in, on, or under any of the navigable waters of the United States and any facility of any kind which is subject to the jurisdiction of the United States and is located in, on, or under any other waters, other than a vessel or a public vessel.

(3) This is a much broader definition of waterfront facility than provided by the above acts. Coast Guard jurisdiction is limited primarily by agreement with the EPA.

---

2. Bulk

Bulk is a material that is transported on board a vessel without mark or count and which is directly loaded into a hold or tank on a vessel without containers or wrappers.

---

3. Contiguous

As used in 33 CFR 126, contiguous means those buildings that connect with or adjoin piers, wharves, docks, and similar structures, including those buildings that connect directly with other buildings situated in whole or in part upon such structures are considered to be contiguous. A building that is located entirely off the structure of a pier or wharf and has no direct contact with it is not a contiguous building and is not part of the facility.

---

4. Vessels and Non-Facility Equipment

The definition of a waterfront facility under the Magnuson Act and the PWSA does not include vessels, railways, cranes, working areas, roadways, entrance and operating areas, stock and cargo piles, storage areas, container fields, parking lots, fueling areas, storage tanks, and handling areas, unless they are located upon the structure of the pier or wharf, or within a building upon or contiguous to the structure. Hence, a vessel temporarily moored to a waterfront facility does not become part of the facility.

---

5. Designated Waterfront Facility

A facility regulated under 33 CFR Part 126 that handles dangerous cargoes subject to 46 CFR Part 148 or 49 CFR Parts 171-179, is considered a designated waterfront facility. Under the provisions of 33 CFR 126.13, these cargoes can be handled, stored, stowed, loaded, discharged, or transported only at designated waterfront facilities that meet the requirements in 33 CFR 126.15. Bulk liquid waterfront facilities (other than certain liquefied gas facilities) are not covered under 33 CFR Part 126 and therefore are not designated waterfront facilities."

The definition of a designated waterfront facility under 33 CFR Part 126 is limited to those handling commodities subject to specific regulations. If a facility handles any materials that require it to be a designated waterfront facility under 33 CFR Part 126, it must store all hazardous materials in accordance with 33 CFR 126.15, even if the packages and/or quantities are exempted under 49 CFR Parts 171-179.

---

6. Facility of Particular Hazard

A facility of particular hazard is a designated waterfront facility (regulated under 33 CFR Part 126) that handles a cargo listed in 33 CFR 126.10. A facility of particular hazard must meet all the conditions in 33 CFR 126.15, plus the additional requirements in 33 CFR 126.16.

C. TYPES OF WATERFRONT FACILITIES

In general, waterfront facilities are regulated and inspected according to the types of hazardous products they transfer to or from vessels. Facilities that transfer products in more than one category will be inspected for compliance with each applicable set of regulations. In general, facilities are fixed structures. In some cases, tank trucks and rail cars can be considered mobile facilities (see 33 CFR 154.105). Under the PWSA, vehicles are not facilities; however, when a vehicle capable of transferring a liquefied gas drives onto a fixed structure, it becomes part of the equipment on the structure converting it into a liquefied gas transfer facility. Vessels inspected under the regulations in CFR Title 46 are never considered facilities; however, a permanently moored vessel that is not inspected under Title 46 may be considered part of a facility. Publicly owned or operated facilities are included in the definition of facility; however, facilities owned and operated by Federal agencies generally are not inspected by the COTP. The four general categories of waterfront facilities are: bulk liquefied gas, dry bulk, packaged, and bulk liquid. LNG facilities and LHG facilities are bulk liquefied gas facilities. Bulk liquid facilities, outer continental shelf facilities, and deepwater ports are covered elsewhere in this manual.

---

1. Bulk Liquefied Natural Gas Waterfront Facilities

a. Definition. A bulk liquefied natural gas waterfront facility is any pier, wharf, dock or similar structure to which a vessel may be secured that is used, or is capable of being used, to transfer Liquefied Natural Gas (LNG) to or from a vessel, in bulk. The facility also includes areas of land, water, or land and water under and in immediate proximity to the structure, buildings on or contiguous to the structure, and equipment and materials on the structure or in the buildings. This term does not include facilities directly operated by the DOD.

b. Jurisdiction. The bulk LNG facility requirements primarily apply to active facilities; however, some of the safety requirements may apply to facilities in caretaker status.

(1) These rules are issued under the PWSA and therefore only apply to structures that are located in, on, or under the navigable waters of the United States (out to 5 kilometers).

(2) A tank truck or rail car that transfers liquefied gas from a structure converts that structure into a LNG facility. The owner of the structure or area of land and the operator of the tank truck or rail car are jointly responsible for ensuring that the requirements are met if a LNG transfer takes place.

(3) Jurisdiction on LNG facilities is generally limited by regulation to the marine transfer area. The marine transfer area on LNG facilities extends from the waterfront or manifold to the last valve prior to the receiving tank.

c. Applicable regulations. Facilities handling LNG in bulk are regulated under 33 CFR Part 127. The MARPOL reception facility regulations in 33 CFR Part 158 may also apply to a LNG facility.

---

2. Bulk Liquefied Hazardous Gas Waterfront Facilities

a. Definition. A bulk liquefied hazardous gas waterfront facility is any pier, wharf, dock or similar structure to which a vessel may be secured that is used, or is capable of being used, to transfer a Liquefied Hazardous Gas (LHG) to or from a vessel, in bulk. The facility also includes areas of land, water, or land and water under and in immediate proximity to the structure, buildings on or contiguous to the structure, and equipment and materials on the structure or in the buildings.

(1) This term does not include facilities directly operated by the DOD.

(2) Liquefied hazardous gases are those products listed in 33 CFR 126.10(d).

b. Jurisdiction. The bulk LHG facility requirements primarily apply to active facilities, however some of the safety requirements may apply to facilities in caretaker status.

(1) These rules are issued under the PWSA and therefore only apply to structures that are located in, on, or under the navigable waters (out to 5 kilometers) of the United States. A tank truck or rail car that transfers LHG from a structure converts that structure into a LHG facility. The owner of the structure and the operator of the tank truck or rail car are jointly responsible for ensuring that the requirements are met if a LHG transfer takes place.

(2) Jurisdiction on LHG facilities is generally limited to the marine transfer area. The marine transfer area on LHG facilities extends from the waterfront or manifold to the first valve inland from the manifold, including the entire pier or wharf on which the transfer manifold is located.

c. Applicable regulations. Facilities handling LHG in bulk are regulated under 33 CFR Part 126. The MARPOL reception facility regulations in 33 CFR Part 158 may also apply to a LHG facility.

---

3. Dry Bulk Waterfront Facilities

a. Definition. A dry bulk waterfront facility is any pier, wharf, dock or similar structure to which a vessel may be secured that is used, or is capable of being used, to transfer solid hazardous materials, to or from a vessel, in bulk.

(1) The facility also includes areas of land, water, or land and water under and in immediate proximity to the structure, buildings on or contiguous to the structure, and equipment and materials on the structure or in the buildings.

(2) This term does not include facilities directly operated by the DOD. Bulk solid hazardous materials are any materials, other than liquids or gases, listed in the 49 CFR 172.101 table and its appendix when shipped in bulk.

(3) Bulk solid hazardous materials that may be transported on vessels without prior approval from the Commandant are listed in 46 CFR 148.01.

b. Jurisdiction. These rules are issued under the PWSA and therefore only apply to structures that are located in, on, or under the navigable waters (out to 5 kilometers) of the United States.

(1) When a truck or rail car transfers solid hazardous materials to or from a vessel, it and the structure on which it is located, are to be considered a waterfront facility covered under these rules.

(2) Jurisdiction on dry bulk facilities includes the entire pier or wharf from which a transfer takes place, all buildings on or contiguous to such structures, and any equipment or materials on the structures or in the buildings.

c. Applicable regulations. Facilities handling solid hazardous materials in bulk are regulated under 33 CFR 126. The MARPOL reception facility regulations in 33 CFR 158 may also apply to a dry bulk waterfront facility.

---

4. Packaged Hazardous Material Waterfront Facilities

a. Definition. A packaged hazardous material waterfront facility is any pier, wharf, dock or similar structure to which a vessel may be secured that is used, or is capable of being used, to transfer packaged hazardous materials, to or from a vessel.

(1) The facility also includes areas of land, water, or land and water under and in immediate proximity to the structure, buildings on or contiguous to the structure, and equipment and materials on the structure or in the buildings.

(2) This term does not include facilities directly operated by the DOD.

(3) Packaged hazardous materials are those materials covered under 49 CFR Parts 171-179 when carried in packages that meet the requirements of those parts, including materials shipped in transport vehicles (tank trucks, rail cars, etc.) and freight containers.

b. Jurisdiction. These rules are issued under the PWSA and therefore only apply to structures that are located in, on, or under the navigable waters (out to 5 kilometers) of the United States.

(1) When a truck or rail car transfers packaged hazardous materials to or from a vessel, it and the structure on which it is located, are a waterfront facility covered under these rules.

(2) Jurisdiction on packaged hazardous material facilities includes the entire pier or wharf from which a transfer takes place, all buildings on or contiguous to such structures, and any equipment or materials on the structures or in the buildings.

c. These limits to jurisdiction over the waterfront facility do not apply to inspections of packaged hazardous materials consigned for shipment by water under the HMTA (49 U.S.C. 1801-1819), for which jurisdiction is not limited to waterfront facilities.

d. Applicable regulations. Facilities handling packaged hazardous materials are regulated under 33 CFR Part 126. Packaged hazardous materials must meet the requirements in 49 CFR Parts 171-179. The MARPOL reception facility regulations in 33 CFR Part 158 may also apply to a packaged hazardous material waterfront facility.

5. Outer Continental Shelf Facilities

Inspections of these facilities will be conducted by the OCMI in accordance with 33 CFR Part 142 and 43 U.S.C. 1348(c).

---

6. Deepwater Ports

See MSM Volume VI, Ports and Waterways Activities, COMDTINST M16000.11 (Series), Chapter 2.

---

7. Mixed Use Waterfront Facilities

Some waterfront facilities fit into more than one facility type. For instance, a facility may handle both oil and liquefied gases in bulk.

In most cases, there is a distinct separation between the portions of the facility that handles these different categories of product and each portion can be treated as a separate facility. In some cases, the same area is used for different categories of product and that area must meet the requirements for more than one facility type.

If the requirements conflict, the COTP should apply the requirements that provide the highest level of safety.

D. TYPES OF WATERFRONT FACILITY VISITS

---

1. Inspections

An inspection is a formal visit to a waterfront facility to ensure its safe operation and to verify compliance with applicable safety, security, and pollution prevention regulations. The applicable regulations for each type of facility are listed in paragraph B of this chapter. The frequency of inspection will be established by the COTP. Before the inspection visit, inspecting personnel should review the facility file for previous instances of noncompliance, outstanding deficiencies, hot work permits, and any alternatives, exemptions, or waivers granted. The facility's latest operations manual should also be reviewed. Facility Inspectors should consider contacting cognizant state and local authorities (local fire department, state department of environmental protection, etc.) to see if they would like to conduct a joint inspection. Joint inspections promote interagency cooperation and reduce the inspection burden on the facility operator. After arriving at the facility, the inspection team should be

accompanied by a facility representative. The inspection team must record each discrepancy observed, including those corrected immediately. A report of the inspection, discrepancies found, and actions taken to correct those discrepancies must be entered into MISLE. The Waterfront Facility Inspection, Form CG-4200 may be used as a guide for inspectors; however, for most facility inspections, the Waterfront Facility Inspection, CG-4200 must be supplemented with a locally prepared checklist until an updated form is developed and distributed. A copy of the facility inspection report must be provided to the facility owner or operator.

---

2. Surveys

A facility survey is a detailed account of a facility's physical plant and equipment used to update Coast Guard files. Updated information must be entered into MISLE. Diagrams, photographs, manuals, permits, and similar information that cannot be stored in the MSIS facility file must be maintained by the COTP in a facility file that is readily available for use when responding to an emergency at the facility. Each waterfront facility must be surveyed every two years. The survey and an inspection should be combined into a single facility visit. Facility Inspectors should use the Port Security Checklist as a guide in collecting physical security information during the survey. Physical security surveys must also be conducted at passenger ship terminals and category I and II Key Asset Protection Program facilities which are not inspected waterfront facilities. For further information on facility surveys, see MSM Volume VI, Ports and Waterways Activities, COMDTINST M16000.11 (Series), Chapter ,1 and MSM Volume VII, Port Security, COMDTINST M16000.12 (Series), Chapter 2.

---

3. Transfer Monitors

When monitoring transfer operations between a vessel and facility, COTP personnel should monitor both facility and vessel operations during the transfer. The facility portion of the visit should be recorded in MISLE as a facility transfer monitor.

---

4. Waste Reception Facility Inspections

Each waterfront facility that is used by oceangoing tank vessels or other oceangoing vessels of more than 400 GT must provide MARPOL waste reception facilities (33 CFR Part 158). For coastal ports, most waterfront facilities must have waste reception facilities for oil and garbage even if no hazardous materials are transferred to or from the facility. Waste reception facility inspections may be conducted during the same visit when other inspections are conducted.

---

5. Other Visits

In addition to the above visits described in D.1 through D.4, it may be necessary to visit a waterfront facility for container inspections, investigations, inspection discrepancy follow-ups, operations manual reviews, document and certificate checks, firefighting equipment checks, pollution prevention/ compliance checks, hot work permit checks, and pollution response plan drills. If possible, these visits should be conducted in conjunction with vessel boardings at the facility. Every visit to a waterfront facility must be documented in MISLE.

E. BULK LIQUEFIED NATURAL GAS WATERFRONT FACILITY INSPECTIONS

1. Applicable Regulations

Liquefied Natural Gas (LNG) waterfront facilities are regulated separately from waterfront facilities that handle other bulk liquid hazardous materials. The regulations in 33 CFR Parts 154 and 156 do not apply to LNG facilities. Only LNG facilities are regulated under 33 CFR Part 127. There is no capacity threshold for these facilities and the requirements apply equally to fuel and cargo. The LNG facility requirements apply only if the product is transferred or stored as a liquid at the facility. There are no separate regulations for mobile LNG facilities; however, any pier, wharf, or area of land from which a mobile facility transfers LNG must meet the fixed facility requirements or obtain an alternative from the COTP.

2. Letter of Intent and Manuals

Each owner who intends to build a new waterfront facility to handle LNG in bulk, or plans new construction on an existing LNG facility, must notify the COTP of their intent. A letter of intent must be sent to the COTP at least 60 days before construction begins (33 CFR 127.007). If a facility becomes inactive, the owner or operator must submit a new letter of intent at least 60 days before it transfers LNG again. An LNG facility is considered active unless the facility owner or operator notifies the COTP that no LNG transfer operations are planned for the next 12 months. The COTP must review the letter of intent and construction plans. A letter of recommendation based on this review must be sent to the originator of the letter of intent and to the Federal and local authorities having jurisdiction. The COTP should seek public comments before making a recommendation and, for new LNG facilities, should consider public hearings or meetings. If any of the information in the letter of intent changes, the owner or operator must notify the COTP within 15 days. At least 30 days before transferring LNG, the facility owner or operator must submit two copies of the operations manual and two copies of the emergency manual to the COTP for review. If the operations manual meets 33 CFR 127.305 and the emergency manual meets 33 CFR 127.307, the COTP should mark the manuals with the words "Examined by the Coast Guard" and return one copy

of each manual to the sender. One copy of each examined manual must be retained with the facility file at the COTP office. If a manual does not meet the regulatory requirements, the COTP should either require changes or approve an acceptable alternative. During inspections, ensure that the operations and emergency manuals have been examined by the COTP and maintained up to date. During monitors, ensure that the operations manual is readily accessible to the facility person in charge and that the transfer procedures in the operations manual are followed.

---

3. Fire Safety

The goal of fire safety practices on waterfront facilities is to prevent fires and explosions. It is also to ensure that the resources necessary to respond to a fire are available and in working order should a fire occur. On bulk LNG waterfront facilities, the threat of fire comes from both flammable products and their vapors. Vapor plumes from an LNG spill can travel a significant distance from the spilled liquid. The following fire safety requirements apply to bulk liquefied gas facilities:

a. Smoking prohibitions. Under 33 CFR 127.615, smoking is prohibited in the marine transfer area of an LNG waterfront facility when there is LNG present. For practical purposes, this means no smoking on an active facility.

(1) During LNG facility inspections and monitors, inspecting personnel should ensure that anyone they see smoking is in an area where smoking is authorized.

(2) Also note anyone smoking on a vessel moored to the facility, since smoking is prohibited on the weather decks of tank vessels moored alongside a dock under 46 CFR 35.30-5(d).

b. Hot work. Hot work is any welding, burning, cutting, or similar operation that generates heat or sparks that could ignite a flammable material. A permit from the COTP is required for such operations on LNG waterfront facilities under 33 CFR 127.617. See MSM Volume VI, Ports and Waterways Activities, COMDTINST M16000.11 (Series) for more information.

(1) General. The intent of this requirement is to prohibit indiscriminate hot work that could cause a fire or explosion by providing the COTP with authority to regulate such an operation.

(a) The prime consideration in evaluating hot work permit requests must be safety. If the degree of safety is questionable, a permit should not be issued. Liaison with local fire authorities is encouraged when evaluating unusual permit requests.

(b) Permits may be issued for a single day, the duration of a single project, or for a longer period (up to one year) that will cover a number of projects, at the discretion of the COTP.

(c) In some cases, conditions may make some requirements for hot work permits unnecessary or not feasible. In these instances, the COTP may use the alternative authority provided by 33 CFR 127.017.

(d) In other cases, local or unusual conditions may make these requirements for hot work permits inadequate and additional conditions should be added to the permit. Any additional conditions specified by the COTP should be based upon sound safety standards such as NFPA or ANSI standards.

(2) Hot work on a vessel moored to an LNG waterfront facility must be covered under a permit issued to the facility under 33 CFR 127.617.

(3) Enforcement. The hot work permit requirements should be enforced to the maximum extent possible.

(a) Where practical, hot work permit enforcement may be performed by local fire departments; however, COTP personnel must occasionally verify that the conditions on the permit are being followed, particularly on facilities that have a history of safety violations.

(b) If hot work is in progress during a facility inspection or monitor, the Marine or Facility Inspector should verify that the facility (or a vessel moored to the facility) has a permit for the hot work and that the conditions of the permit are being met.

(4) References. NFPA has published the following standards for hot work:

(a) Welding and Cutting," NFPA 51.

(b) "Welding Processes," NFPA 51B.

(c) "Control of Gas Hazards on Vessels to be Repaired," NFPA 306.

c. Motor vehicles on the pier. Under 33 CFR 127.311, motor vehicles may only stop or park in designated parking spaces on an LNG facility. Motor vehicles must not be refueled on a LNG facility.

d. Electrical installations. Under 33 CFR 127.105, electrical power systems (which include electrical wiring and equipment) on LNG facilities must conform to the National Electric Code (NFPA 70). LNG facilities must also have an emergency

power source for the emergency shutdown system, communications equipment, firefighting equipment, and emergency lighting. During inspections and monitors, Facility Inspectors should look for the following electrical hazards:

(1) Conditions that could cause arcing.

(2) Electric motors that are--

(a) Located too near combustible material;

(b) Located in damp places or subjected to corrosive vapors;

(c) Covered with rust, lint or dust;

(d) Burning out because of overloading or low voltage at motor terminals;

(e) Protected by improper overcurrent protection; or,

(f) Producing excessive heat;

(3) Bare wires;

(4) Loose or frayed connections;

(5) Overloaded outlets;

(6) Corroded terminals;

(7) Lack of high voltage signs near transformers and switch boxes; and,

(8) Defective insulation.

e. Open fires. Open fires in lamps, barrels, drums, or similar apparatus are prohibited. These requirements should be strictly enforced within the marine transfer area when a pipe or tank contains LNG or LNG vapors (see 33 CFR 127.615).

f. Maintenance stores and supplies. Under 33 CFR 127.313, materials that may be stored in bulk on LNG facilities are limited to LNG, Liquefied Petroleum Gas (LPG), vessel fuel, and oily waste from vessels.

(1) Other flammable products, such as solvents, lubricants, paints, and fuels, may only be stored on LNG facilities in amounts that could reasonably be used in one day. These flammable products must be stored in accordance with chapter 4 of NFPA 30.

(2) During inspections, inspecting personnel should look for containers of flammable liquids or other hazardous materials left on the pier or wharf. Inspecting personnel should make sure containers in storage compartments are not leaking or left open so that vapors accumulate in the storage compartment.

g. Fire extinguishing equipment. Fire extinguishing and protection equipment is essential to the safe operation of any waterfront facility.

(1) See 33 CFR Parts 127.601 through 127.611 for the requirements for firefighting equipment on LNG facilities. These regulations describe the required fire main systems, dry chemical systems, and portable fire extinguishers.

(2) Under 33 CFR 127.601(b), fire appliances such as hydrants, standpipes, fire extinguishers, hose stations, and fire monitors must be red or some other conspicuous color and must be in locations that are readily accessible.

(3) Once installed, fire extinguishing and protection equipment must be maintained in good condition at all times. See 33 CFR 127.405 for information about repairs.

(4) During inspections, inspection personnel should look for improperly marked fire appliances, material blocking access to fire appliances, and appliances that are not functional (excessive corrosion, missing fire hoses, etc.). They should also make sure that the international shore connection is available. A waterfront LNG facility must have at least one international shore connection.

h. Warning signs. Warning signs must be displayed on each LNG waterfront facility at the point of transfer. These signs must be visible from both the shore and the water and must conform to the requirements in 33 CFR 127.113.

(1) Vessels carrying LNG in bulk are also required to display warning signs that meet the requirements in 46 CFR 154.1830.

(2) The intent of this requirement is to warn persons and vessels approaching the facility of the hazardous nature of the operation.

---

4. Transfer Operations

a. PIC. At all times during the transfer of a liquefied gas to or from a vessel, the transfer system in use must be under the supervision of a qualified PIC. See 33 CFR 127.319(a) for the relevant regulation.

(1) On a LNG facility, a PIC must be trained and certified in accordance with 33 CFR 127.301 to be qualified. The training must include at least 48 hours of LNG transfer experience.

(2) Each PIC must know the hazards of the cargo being transferred, the regulations that apply to the operation, and the facility's operating and emergency procedures.

(3) Written certification of the PIC's training must be maintained at the facility.

(4) The person assigned as PIC at the facility must not be assigned as PIC of the vessel's transfer operation or to any other duties that may prevent him or her from carrying out his or her duties as PIC on the facility.

b. Communications. Communication between the PIC on the facility and the PIC aboard the vessel are vital to the safe transfer of LNG in bulk.

(1) The shoreside PIC must maintain communications in accordance with the requirements in 33 CFR 127.111 and 33 CFR 127.319(b)(1).

(2) During monitors, the PIC must have an effective means of communication. If there is some doubt as to the effectiveness of communications, a communications check is required.

c. Transfer connections. Connections between transfer hoses or loading arms and fixed piping must be secured with sufficient bolts and suitable gasket material to prevent leakage. The connections must allow for vessel movement within the limits of its moorings without placing strain on the transfer piping or loading arm.

(1) See 33 CFR 127.315 for specific requirements.

(2) During monitors, check transfer connections for the number of bolts used. Carefully check questionable connections for leaks. A portable combustible gas indicator can be used to check for natural gas leaks.

d. Preliminary transfer inspection. Before commencing a cargo transfer, the facility PIC must ensure that the conditions for transfer have been met. This includes verifying that the hot work, warning sign, and transfer connection requirements have been met, as well as verifying that the PIC aboard the vessel is ready to begin the transfer.

(1) On LNG facilities, the items listed in 33 CFR 127.315 must be checked and a Declaration of Inspection (DOI) completed jointly with the vessel PIC, as required under 33 CFR 127.317.

(2) During monitors, ensure that the DOI is properly completed and signed.

5. Transfer System Testing Requirements

a. Transfer hoses and piping. On LNG facilities, each transfer hose, loading arm, and cargo transfer pipe must be hydrostatically tested at least once each year and each time major alterations are made to the system (see 33 CFR 127.407(a)).

(1) Each cargo transfer hose and pipe must be subjected to at least 1.1 times its maximum allowable working pressure for at least 30 minutes during the test (see 33 CFR 127.407(b)).

(2) Bulk LNG hoses and piping must not be tested with LNG, but may be tested with non-hazardous liquids other than water.

(3) Where hydrostatic testing is impractical, the COTP may authorize pneumatic testing of cargo hoses and piping with the condition that the precautions in 46 CFR 56.97-35 are followed during testing.

(4) Before granting alternatives or waivers for hydrostatic tests, the COTP must consider the following factors:

(a) Length of transfer system under evaluation.

(b) Access to transfer system (buried, elevated, insulated, etc.).

(c) The presence of any relief valves in the system and their routine maintenance schedule.

(d) The age of the system.

(e) The history of the system (e.g., what commodities the system has been used for, major alterations made).

(f) The date of the last hydrostatic test.

b. Other transfer system equipment. Other transfer system equipment must be periodically checked or tested to ensure proper operation and maintenance.

(1) The set pressure on each relief valve must be tested or the relief valve must be visually inspected during the annual piping test (see 33 CFR 127.403 and 127.407).

(2) The date and results of these tests and inspections must be recorded and maintained at the facility.

(3) During annual inspections, check facility records to verify that these tests and inspections have been recorded.

---

6. Occupational Safety

The Coast Guard and the Occupational Safety and Health Administration (OSHA) share responsibility for the safety of workers on waterfront facilities handling hazardous materials. The Coast Guard's primary responsibility in this area is the safe handling of hazardous materials. As liquid bulk facilities, LNG facilities are not covered by the OSHA marine terminal regulations in 29 CFR 1917. Instead, these facilities are covered by the general OSHA workplace regulations in 29 CFR Part 1910.

a. Lighting. To prevent accidents, waterfront facilities must be adequately illuminated when handling hazardous materials during periods of darkness.

(1) Adequate lighting is required under 33 CFR 127.109.

(2) The light level must be at least 55 lux at each transfer point and at least 11 lux in other parts of the transfer area. Measurements of light intensity should, if possible, be made with a light meter.

(3) Lights should be installed over aisles and in other locations where they will not be damaged by cargo handling equipment or vehicles.

(4) Light fixtures should be protected by wire guards unless mounted out of the normal reach of equipment and personnel.

(5) Open flame lights and lanterns using kerosene or gasoline are prohibited.

(6) When monitoring a transfer after dark, ensure that the work area lighting meets the regulatory requirements.

b. Cargo information. Information about the cargo being transferred or stored at a facility is necessary to contain and clean up cargo spills, safely extinguish cargo fires, and treat persons exposed to the cargo. Under 33 CFR 127.307 each LNG facility must have an emergency manual that contains information on emergency response, firefighting, and first aid procedures for LNG.

c. Warning alarms. Warning alarms are intended to alert approaching vessels and the local community in the event of an LNG release.

(1) Each LNG facility must have both a siren and a rotating (or flashing) amber light that meet the specifications in 33 CFR 127.207.

(2) The adequacy of these warning alarms should be verified during the annual facility inspection.

(3) On LNG facilities, the light intensity and sound decibels should be verified from placards affixed to the equipment or equipment manuals. If appropriate placards and manuals are not available, compliance should be verified in the same manner as for LHG facilities.

---

7. Security

a. Guards. The security requirements in 33 CFR Part 105 and Part 127.701-127.711 do not specifically require guards; however, they do require access control and security patrols, which usually require guards.

(1) Trained guards should be provided in sufficient numbers to provide surveillance of the waterfront facility to deter unlawful entry, deter vandalism, detect fire hazards, detect discharges of hazardous materials, and check the readiness of protective equipment.

(2) Guards should be thoroughly instructed in the operation of fire alarm boxes, fire hoses, portable fire extinguishers, and similar fire equipment. They should know the location of telephones and emergency equipment, emergency fire protection measures, and emergency notification procedures.

(3) The NFPA has developed two standards applicable to guards that may be used in determining the adequacy of guards: Guard Service - NFPA 601, and Guard Operations - NFPA 601A.

(4) When determining whether the number of guards provided is adequate for a facility, the COTP should consider the security barriers and detection devices in place.

b. Guard requirement alternatives. Under 33 CFR 127.017, the COTP may approve alternatives to guards on LNG facilities where the stationing of guards is impractical.

(1) Alternatives for guard requirements should only be considered for small transfer facilities that are not manned between transfer operations and do not store bulk liquid hazardous materials on site, which is generally not applicable to LNG facilities. Such a facility may be secured by fencing and monitored by intrusion detection devices, cameras, or random patrols rather than permanent guards.

(2) When reviewing requests for alternatives to the guard requirements, the COTP must consider the security barriers and detection devices in place, the likelihood of intrusion, the proximity of population centers, and the danger presented by any tanks or piping containing hazardous materials.

c. Security barriers. Fences, walls, and similar barriers act as a deterrent to unauthorized entry onto waterfront facilities handling or storing hazardous materials.

(1) Buildings, water bodies, ravines, and similar barriers may also be used to deter entry but may need to be augmented by safeguards such as fences, walls, patrols, surveillance cameras, or intrusion detection devices.

(2) Under 33 CFR 127.709, impounding spaces, control stations, and electrical power sources on LNG facilities must be within a fence or wall.

(3) Security barriers should be considered when determining the appropriate number of guards on the facility.

---

8. Records

According to 33 CFR 126.15(a)(8) and 127.409, LNG facilities must keep and make available to the COTP certain records of alternatives approved by the COTP, equipment tests, and DOIs.

The MISLE facility file is the official Coast Guard record for facility information.

A paper file must be maintained by the COTP for each facility in the zone for any facility information that cannot be maintained in MISLE including a copy of the operations manual, a copy of the emergency manual, a copy of the worksheet or checklist used during inspections, facility plans or diagrams, and similar information.

F. BULK LIQUEFIED HAZARDOUS GAS WATERFRONT FACILITY INSPECTIONS

---

1. Applicable Regulations

LHG waterfront facilities are regulated separately from waterfront facilities handling LNG and other bulk liquid hazardous materials. LHGs are listed in 33 CFR table 127.005. LHG facilities must comply with the requirements of 33 CFR Part126. There is no capacity threshold for LHG facility requirements. These requirements apply only if the product is transferred or stored as a liquid cargo at the facility. There are no separate regulations for

mobile LHG facilities; however, any pier, wharf, or area of land from which a mobile facility transfers LHG must meet the fixed facility requirements or obtain a waiver from the COTP. The regulations in 33 CFR Parts 154 and 156 do not apply to LHG facilities.

---

2. General Permit

LHG facilities are not required to have an intent or operations manual. Instead, each facility is automatically issued a general permit to handle, store, stow, load, discharge, or transport LHG under 33 CFR 126.27. If an individual decides to operate an LHG facility, they are not required to notify the Coast Guard. Each LHG facility must meet certain conditions in 33 CFR 126.15 and 126.27. If a facility fails to meet those conditions, the COTP may terminate or suspend the general permit to handle LHG. (See MSM Volume VI, Ports and Waterways Activities, COMDTINST M16000.11 (Series), Section 1.H.1.) Each COTP must be alert for changes in LHG operations within their COTP zone.

---

3. Fire Safety

The purpose of fire safety on waterfront facilities is to prevent fires and explosions and ensure that the resources necessary to respond to a fire are available and in working order should a fire occur. On bulk LHG waterfront facilities, the threat of fire comes from both flammable products and their vapors. Vapor plumes from a flammable liquefied gas spill can travel a significant distance from the spilled liquid. The following fire safety requirements apply to bulk liquefied gas facilities:

a. Smoking prohibitions. (33 CFR 127.1113) prohibits smoking on LHG waterfront facilities except where designated by the owner or operator of the facility.

(1) Smoking may only be permitted on LHG facilities in accordance with local ordinances and regulations.

(2) Where there are no local ordinances, the COTP should ensure that all locations classified as hazardous in NFPA 70 (generally within 15 meters of where flammable hazardous materials are stored) are posted as no smoking areas.

(3) Smoking restrictions generally do not apply if the LHG handled is not flammable. Questionable cases should be discussed with local authorities.

(4) Signs must be conspicuously posted indicating those areas where smoking is authorized and those areas where smoking is prohibited.

(5) It is not enough for the facility owner or operator to post signs, the restrictions must also be enforced.

(6) Personnel should look for "no smoking" signs near piping and tanks for flammable products during LHG facility inspections and monitors.

(a) Personnel who see someone smoking should make sure that person is in an area where smoking is authorized.

(b) Personnel should also note anyone smoking on a vessel moored to the facility, since smoking is prohibited on the weather decks of tank vessels moored alongside a dock under 46 CFR 35.30-5(c).

b. Hot work. Hot work is any welding, burning, cutting, or similar operation that generates heat or sparks that could ignite a flammable material. Under 33 CFR 126.15(c), prior approval of the COTP is required for such operations on LHG waterfront facilities. A hot work permit is the preferred means for giving COTP approval for hot work operations. (See MSM Volume VI, Ports and Waterways Activities, COMDTINST M16000.11 (Series), Section 1.H.5 for more information.)

(1) General. The intent of this requirement is to prohibit indiscriminate hot work that could cause a fire or explosion by providing the COTP with authority to regulate such an operation.

(2) The prime consideration in evaluating hot work permit requests must be safety. If the degree of safety is questionable, a permit should not be issued. Liaison with local fire authorities is encouraged when evaluating unusual permit requests.

(3) Permits may be issued for a single day, the duration of a single project, or for a longer period (up to one year) that will cover a number of projects, at the discretion of the COTP.

(4) In some cases, local or unusual conditions may make some of these requirements unnecessary or not feasible. In these instances, the COTP may use the waiver authority provided by 33 CFR 126.11.

(5) In other cases, local or unusual conditions may make these requirements inadequate and additional conditions should be added to the permit. Any additional conditions specified by the COTP should be based upon sound safety standards such as NFPA or ANSI standards.

(6) Hot work on a vessel moored to an LHG facility must be covered under a permit issued to the facility under 33 CFR 126.15(c).

c. Enforcement. The hot work permit requirements should be enforced to the maximum extent possible.

(1) Where practical, hot work permit enforcement may be performed by local fire departments; however, COTP personnel must occasionally verify that the conditions on the permit are being followed, particularly on facilities that have a history of safety violations.

(2) If hot work is in progress during a facility inspection or monitor, verify that the facility (or a vessel moored to the facility) has a permit for the hot work and that the conditions of the permit are being met.

d. References. NFPA has published the following standards for hot work:

(1) "Welding and Cutting," NFPA 51.

(2) "Welding Processes," NFPA 51B.

(3) “Control of Gas Hazards on Vessels to be Repaired," NFPA 306.

e. Motor vehicles on the pier. Under 33 CFR 127.1311, unattended motor vehicles may only remain on a LHG facility when parked in parking spaces designated by the facility owner or operator in conformance with local ordinances and regulations.

(1) If a vehicle is waiting to load or discharge cargo, equipment, supplies, or passengers it must be attended by a driver. The COTP may waive this requirement if the vehicle does not block the flow of traffic and the vehicle engine is stopped.

(2) The number of vehicles permitted on the pier or wharf at one time should be limited to permit free traffic flow. Filling vehicle fuel tanks while on the LHG facility is prohibited under 33 CFR 127.1311(b).

d. Equipment on the pier driven by internal combustion engines. 33 CFR 126.15(e) provides additional safety requirements for equipment that is driven by an internal combustion engine and is regularly used on an LHG waterfront facility.

(1) Such equipment includes forklifts, generators, and pumps, as well as motor vehicles.

(2) The equipment must be kept free from excessive oil, grease, and lint so as not to constitute a fire hazard.

(3) Each piece of equipment must carry an approved fire extinguisher unless the equipment is operating in an area where extinguishers are available on the facility, and the COTP has approved the arrangement.

(4) Equipment that is not attached to the pier or wharf should not be stored or fueled on the pier or wharf. Such equipment should be stored or fueled in designated areas away from the pier or wharf.

e. Rubbish and waste materials. The requirements in 33 CFR 126.15(f) address the fire hazards created by poor housekeeping on LHG facilities. Fire safety inspections should include out-of-the-way places as well as obvious areas. Both the insides and outsides of sheds and other buildings should be examined. Hazards and potential hazards that could cause a fire to start or hinder firefighters should be noted and corrected. Inspectors should be alert to--

(1) Piles of dunnage or scrap;

(2) Rubbish or waste materials on piers or wharves;

(3) Sloppy carpenter and paint shops, etc.;

(4) Railroad cars laden with waste materials;

(5) Inadequate or unsuitable waste cans (rubbish should be kept in metal containers with covers, and removed or emptied at frequent intervals to prevent dangerous accumulations); and,

(6) Hazardous accumulations of dust on trusses, girders, or other structural members.

f. Electrical installations. Under 33 CFR 126.15(h), installations of electrical wiring and equipment on LHG facilities made after 28 August 1951 must be in accordance with accepted safe practices.

(1) Conformance to the National Electric Code and to local ordinances and regulations is considered to meet the safe practices requirement.

(2) Electrical equipment, fittings, and other devices must be approved for use by the Underwriters Laboratories, Inc. (UL), the Associated Factory Mutual Laboratories (FM), or the Canadian Standards Association (CSA). National Bureau of Standards (NBS) approval is also acceptable under 33 CFR 126.15(h), however NBS no longer issues such approvals.

(2) All electrical wiring and equipment, including that installed prior to 28 August 1951 must be maintained in a safe condition without defects or modifications that

could cause a fire or personal injury. Defective or dangerous wiring, equipment, and devices must be replaced, removed or permanently disconnected.

(4) During inspections and monitors, personnel should look for the following electrical hazards:

(a) Conditions which could cause arcing.

(b) Electric motors that are:

[1] Located too near combustible material;

[2] Located in damp place or subjected to corrosive vapors;

[3] Covered with rust, lint or dust;

[4] Burning out because of overloading or low voltage at motor terminals;

[5] Protected by improper overcurrent protection; or,

[6] Producing excessive heat.

(c) Bare wires.

(d) Loose or frayed connections.

(e) Overloaded outlets.

(f) Corroded terminals.

(g) Lack of high voltage signs near transformers and switch boxes.

(h) Defective insulation.

g. Heating methods. 33 CFR 126.15(i) requires heating equipment on LHG facilities to be safely installed and maintained in good operating condition.

(1) The recommended guide for safe installation of heating equipment is the National Board of Fire Underwriters Building Code.

(2) For portable electric heating equipment, approval by CSA, FM, or UL should be used as a guide for safe design and NFPA 70 should be used as a guide for safe installation.

(3) Adequate clearances must be provided for heating equipment to prevent undue heating of nearby combustible materials.

(4) In addition, 33 CFR 126.15(i) requires that spark arresters be provided if the heater uses solid fuel.

(5) Open fires in lamps, barrels, drums, or similar apparatus are prohibited. These requirements should be strictly enforced, particularly in areas within 30 meters of a pipe or tank containing flammable products.

(6) During inspections, personnel should look for improper heaters in sheds or shelters on the facility.

h. Maintenance stores and supplies. Under 33 CFR 126.15(g) supplies that are regulated as hazardous materials under 49 CFR Parts 171 through 179 must be kept on LHG facilities only in amounts necessary to meet normal operating requirements. These materials must be stored in appropriate storage compartments (paint lockers, etc.). During inspections, personnel should look for containers of flammable liquids or other hazardous materials left on the pier or wharf and make sure containers in storage compartments are not leaking or left open so that vapors accumulate in the storage compartment.

i. Fire extinguishing equipment. Fire extinguishing and protection equipment is essential to the safe operation of any waterfront facility. The quantity, type, and location of equipment required for LHG facilities varies depending on the products handled and the hazards they present.

(1) Under 33 CFR 126.15(j), fire extinguishing equipment must be available on each LHG facility in adequate quantities, locations, and types. The COTP should work with the local fire authority in determining the adequacy of fire equipment. NFPA 307 and NFPA 10 may be used as guides when determining adequacy of that equipment.

(2) Once installed, fire extinguishing and protection equipment must be maintained in good condition at all times.

(3) Under 33 CFR 126.15(k), fire appliances such as hydrants, standpipes, fire extinguishers, hose stations, and fire alarm boxes must be conspicuously marked and readily accessible. The color used in marking depends upon local regulations; however, fire appliances are generally marked in red and their purpose or number shown in white lettering. The markings must be placed high enough that they will not be hidden by cargo, stanchions, columns, risers, or other obstructions.

(4) All locations of fire appliances should be numbered and indicated on the facility's floor plan.

(5) If the fire equipment on an LHG facility is inadequate, the COTP must notify the facility operator of the problem in writing and provide the operator an opportunity to correct the situation.

(6) During inspections, personnel should look for improperly marked fire appliances, material blocking access to fire appliances, and appliances that are not functional (excessive corrosion, missing fire hoses, etc.).

j. Warning signs. Warning signs must be displayed on each LHG waterfront facility at the point of transfer. The goal of this requirement is to warn vessels approaching the facility of the hazardous nature of the operation.

(1) Warning signs must face parallel to and perpendicular to the shoreline. They must be visible from vessels on the waterway at all times during the transfer.

(2) On LHG facilities, these signs must conform to the requirements in either 46 CFR 151.45-2(e)(1) or 46 CFR 153.955.

(3) Vessels carrying LHG in bulk are also required to display warning signs that meet the requirements in 46 CFR 35.30-1, 151.45-2, or 153.955, as applicable.

---

4. Transfer Operations

a. PIC. When transferring LHG to or from a vessel, the transfer system in use must be under the continuous control and surveillance of a qualified PIC.

(1) To be qualified, the PIC must be trained, and the training documented, in accordance with 33 CFR 126.15(o)(1). Evidence of training for PICs on LHG facilities must be provided to the COTP prior to the transfer.

(2) The person assigned as PIC on the facility must not be assigned as PIC of the vessel's transfer operation or to any other duties that may prevent him or her from carrying out his or her duties as PIC on the facility.

(3) The COTP may authorize a single person to be the PIC on both the facility and the vessel if the proposed operations provide adequately for the safety of the vessel and the facility. However, such authorizations should not be routinely authorized for LHG transfers due to the complexity of transfer operations and the hazardous nature of the cargo.

b. Communications. Communications between the PIC on the facility and the PIC aboard the vessel are vital to the safe transfer of bulk liquefied gases.

(1) The shoreside PIC must maintain communications in accordance with 33 CFR 126.15(o)(3).

(2) During monitors, make sure that the PIC has an appropriate means of communication. If there is some doubt as to the effectiveness of communications, a communications check is required.

c. Transfer connections. Connections between transfer hoses or loading arms and fixed piping must be secured with sufficient bolts and suitable gasket material to prevent leakage. The connections must allow for vessel movement within the limits of its moorings without placing strain on the transfer piping or loading arm.

(1) Specific requirements are contained in 33 CFR 126.15(o)(2).

(2) During monitors, check transfer connections for the number of bolts used. Carefully check questionable connections for leaks. A portable combustible gas indicator can be used to check for flammable gas leaks.

d. Preliminary transfer inspection. Before commencing a cargo transfer, the facility PIC must ensure that the conditions for transfer have been met. This includes verifying that the hot work, warning sign, and transfer connection requirements have been met, as well as verifying that the PIC aboard the vessel is ready to begin the transfer.

(1) When applicable, a copy of the vessel's DOI required under 46 CFR 35.35-30 should be obtained and, to the extent possible, the vessel's condition verified to be as stated on the DOI.

(2) During monitors, ensure that the vessel's DOI is properly completed and signed.

---

5. Transfer System Testing Requirements

a. Transfer hoses and piping. Each transfer hose, loading arm, and cargo transfer pipe must be hydrostatically tested at least once each year.

(1) On LHG facilities, each cargo transfer hose and pipe must be subjected to at least 1.5 times its maximum allowable working pressure during the test (see 33 CFR 126.15(o)(7)(v)).

(2) LHG hoses and piping should not be tested with hazardous products, but may be tested with non-hazardous liquids other than water.

(3) Where hydrostatic testing is impractical, the COTP may authorize pneumatic testing of cargo hoses and piping with the condition that the precautions in 46 CFR 56.97-35 are followed during testing.

(4) Before granting alternatives or waivers for hydrostatic tests, the COTP must consider the following factors:

(a) The length of the transfer system under evaluation.

(b) The access to the transfer system (if it is buried, elevated, insulated, etc.).

(c) The presence of any relief valves in the transfer system and their routine maintenance schedules.

(d) The age of the transfer system.

(e) The history of the transfer system (e.g., what commodities the system has been used for, major alterations made).

(f) The date of the last hydrostatic test.

b. Other transfer system equipment. Other transfer system equipment must be periodically checked or tested to ensure proper operation and maintenance.

(1) On LHG waterfront facilities, each cargo pump system and relief valve must be tested at least once each year.

(2) Each cargo pump pressure gauge must be calibrated at least once each year (see 33 CFR 126.15(o)(7)).

(3) The date and results of these tests and inspections must be recorded and maintained at the facility. During annual inspections, check facility records to verify that these tests and inspections have been recorded.

---

6. Occupational Safety

The Coast Guard and OSHA share responsibility for the safety of workers on waterfront facilities handling hazardous materials. The Coast Guard's primary responsibility in this area is the safe handling of hazardous materials. As liquid bulk facilities, LHG facilities are not covered by the OSHA marine terminal regulations in 29 CFR Part 1917. Instead, these facilities are covered by the general OSHA workplace regulations in 29 CFR Part 1910.

a. Lighting. To prevent accidents, waterfront facilities must be adequately illuminated when handling hazardous materials during periods of darkness.

(1) No lighting intensity is specified for LHG facilities; however, if an LHG facility's lighting does not approximate the LNG facility requirements of at least 55 lux at each transfer point and at least 11 lux in other parts of the transfer area, the lighting should be considered inadequate.

(2) If the lighting on an LHG facility is inadequate, the COTP must notify the facility operator of the problem in writing and provide the operator an opportunity to correct the situation (33 CFR 126.15(n)).

(3) Measurements of light intensity should, if possible, be made with a light meter.

(4) Lights should be installed over aisles and in other locations where they will not be damaged by cargo handling equipment or vehicles.

(5) Light fixtures should be protected by wire guards unless mounted out of the normal reach of equipment and personnel (33 CFR 126.15(n)).

(6) Open flame lights and lanterns using kerosene or gasoline are prohibited (33 CFR 126.15(l)).

(7) Temporary lighting, when required, must be obtained from battery powered flashlights or protected electric lamps that are energized from portable electric generators, located outside off the pier.

(8) When monitoring a transfer after dark, ensure that the work area lighting meets the regulatory requirements.

b. Cargo information. Under 33 CFR 126.15(o)(2)(vii), the LHG facility PIC must possess a cargo information card for each LHG handled. Information on the cargo being transferred or stored at a facility is necessary to contain and clean up cargo spills, safely extinguish cargo fires, and treat persons exposed to the cargo. The cargo information card must include--

(1) The name of the cargo;

(2) The cargo's appearance, color, and odor;

(3) The hazards involved in handling the cargo;

(4) Any special handling procedures for the cargo;

(5) Procedures to follow if the cargo spills or leaks;

(6) Procedures for treating a person exposed to the cargo; and,,

(7) Firefighting procedures and extinguishing agents effective for combating a cargo fire.

c. Warning alarms. Warning alarms are intended to alert approaching vessels and the local community in the event of a liquefied gas release.

(1) Each LHG facility is considered a facility of particular hazard and must meet the requirement for a warning alarm in 33 CFR 126.16(b).

(2) The warning alarm may be either a siren or a rotating, flashing light. The color of the rotating flashing light is not prescribed, however, amber is recommended because it is considered most effective in alerting personnel to a hazard.

(3) The adequacy of warning alarms should be verified during the annual facility inspection. The alarm should be activated while a member of the inspection team, located 1,600 meters away, determines if it can be seen or heard. Inspectors should be particularly alert to obstructions that could prevent a warning light from being seen from the waterway.

---

7. Security

a. Guards. Trained guards are required in sufficient numbers to provide surveillance of the waterfront facility to deter unlawful entry, deter vandalism, detect fire hazards, detect discharges of hazardous materials, and check the readiness of protective equipment.

(1) Guards should be thoroughly instructed in the operation of fire alarm boxes, fire hoses, portable fire extinguishers, and similar fire equipment. They should know the location of telephones and emergency equipment, emergency fire protection measures, and emergency notification procedures.

(2) The NFPA has developed two standards applicable to guards that may be used in determining the adequacy of guards required under 33 CFR 126.15(a): Guard Service - NFPA 601, and Guard Operations - NFPA 601A.

(3) When determining whether the number of guards provided is adequate for a facility, the COTP should consider the security barriers and detection devices in place.

(4) If the guards for an LHG facility are found to be inadequate, the COTP must notify the facility operator of the problem in writing and provide the operator an opportunity to correct the situation.

b. Guard requirement waivers. Under 33 CFR 126.11, the COTP may waive the requirement for guards on LHG facilities where the stationing of guards is impractical or unnecessary.

(1) Waivers for guard requirements should only be considered for small transfer facilities that are not manned between transfer operations and do not store bulk liquid hazardous materials on site. Such a facility may be secured by fencing and monitored by intrusion detection devices, cameras, or random patrols rather than permanent guards.

(2) When reviewing requests for waiver from the guard requirements, the COTP must consider the security barriers and detection devices in place, the likelihood of intrusion, the proximity of population centers, and the danger presented by any tanks or piping containing hazardous materials.

c. Security barriers. Fences, walls, and similar barriers act as a deterrent to unauthorized entry onto waterfront facilities handling or storing hazardous materials. Buildings, water bodies, ravines, and similar barriers may also be used to deter entry but may need to be augmented by safeguards such as fences, walls, patrols, surveillance cameras, or intrusion detection devices. Security barriers are not specifically required on LHG facilities, but they should be considered when determining the appropriate number of guards under 33 CFR 126.15(a).

---

8. Records

Under 33 CFR 126.15(o), LHG facilities must keep certain records and make them available to the COTP. The facility must maintain records of waivers granted by the COTP and equipment tests. The official Coast Guard record for facility information is the MSIS facility file. The COTP must maintain a paper file for each facility in their zone for any facility information that cannot be maintained in MSIS, including a copy of the operations manual, a copy of the worksheet or checklist used during inspections, facility plans or diagrams, and similar information.

G. PACKAGED AND DRY BULK WATERFRONT FACILITY INSPECTIONS

1. Applicable Regulations

Packaged and dry bulk waterfront facilities are regulated under 33 CFR Part 126. These regulations apply to any waterfront facility that handles, stores, stows, loads, discharges, or transports a packaged cargo regulated under 49 CFR Parts 171-179 or a bulk cargo regulated under 46 CFR Part 148. The regulations in 49 CFR Parts 171-179 also apply to facilities handling packaged hazardous materials.

2. Permit to Operate

a. General permit. Under 33 CFR 126.2,7 a waterfront facility is automatically issued a general permit to handle, store, stow, load, discharge, or transport a packaged cargo regulated under 49 CFR Parts 171-179 or a bulk cargo regulated under 46 CFR Part 148 (other than division 1.1 and 1.2 explosives).

(1) This general permit is issued on the condition that the requirements in 33 CFR 126.15 and 33 CFR 126.27 are met.

(2) ,No notice to the Coast Guard is required if an individual decides to operate such a facility.

(3) If an operator fails to meet the requirements in 126.15 and 126.27, the COTP may terminate or suspend the general permit to handle dangerous cargo. See MSM Volume VI, Ports and Waterways Activities, COMDTINST M16000.11 (Series), Section 1.H.1 for more information.

b. Designated dangerous cargo permit. Under 33 CFR 126.17, a waterfront facility may only handle, load, discharge, or transport division 1.1 and 1.2 explosives if the COTP issues a permit or waives the requirement for a permit.

(1) The conditions in 33 CFR 126.15 must be met when handling, loading, discharging, or transporting a designated dangerous cargo.

(2) A permit is required for each transaction of handling, loading, discharging, or transporting a designated dangerous cargo. The permit automatically terminates at the conclusion of the transaction for which the permit was issued. The permit may be terminated or suspended by the COTP whenever he or she deems it necessary for safety or security reasons. See MSM Volume VI, Ports and Waterways Activities, COMDTINST M16000.11 (Series), Section 1.H.2, for more information.

---

3. Fire Safety

The purpose of fire safety on waterfront facilities is to prevent fires and explosions. It also ensures that the resources necessary to respond to a fire are available and in working order should a fire occur. On packaged and dry bulk waterfront facilities the threat of fire stems not only from flammable cargoes but from other flammable articles on the facility such as dunnage, building materials, and rubbish. The following fire safety requirements apply to packaged and dry bulk facilities:

a. Smoking prohibitions. 33 CFR 126.15(b) prohibits smoking on a waterfront facility except where designated by the owner or operator of the facility.

(1) On packaged and dry bulk facilities, smoking may only be permitted in accordance with local ordinances and regulations.

(2) Where there are no local ordinances, the COTP should ensure that all locations classified as hazardous in NFPA 70 (generally within 15 meters of where flammable hazardous materials are stored) are posted as no smoking areas.

(3) Questionable cases should be discussed with local authorities.

(4) Under 49 CFR 176.182(f), smoking is prohibited on or near any vessel loading or unloading explosives at a waterfront facility, but may be allowed in designated smoking areas at a safe distance from the vessel.

(5) Smoking and no smoking signs must be conspicuously posted. It is not enough for the facility owner or operator to post signs, the restrictions must also be enforced.

b. Hot work. Hot work is any welding, burning, cutting, or similar operation that generates heat or sparks that could ignite a flammable material. Prior approval of the COTP is required for such operations under 33 CFR 126.15(c). A hot work permit is the preferred means for giving COTP approval for hot work operations. See MSM Volume VI, Ports and Waterways Activities, COMDTINST M16000.11 (Series), Section 1.H.5, for more information.

(1) General. The intent of this requirement is to prohibit indiscriminate hot work that could cause a fire or explosion by providing the COTP with authority to regulate such an operation.

(a) The prime consideration in evaluating hot work requests must be safety. If the degree of safety is questionable, a permit should not be issued. Liaison with local fire authorities is encouraged when evaluating unusual permit requests.

(b) Permits may be issued for a single day, the duration of a single project, or for a longer period (up to one year) that will cover a number of projects, at the discretion of the COTP.

(c) In some cases, local or unusual conditions may make some of these requirements unnecessary or not feasible. In these instances, the COTP may use the waiver authority provided by 33 CFR 126.11.

(d) In other cases, local or unusual conditions may make these requirements inadequate and additional conditions should be added to the permit. Any additional conditions specified by the COTP should be based upon sound safety standards such as NFPA or ANSI standards.

(e) Welding is prohibited at facilities, or on vessels moored thereto, when explosives are present under 33 CFR 126.15(c). No reference is made to the different classes of explosives; therefore, this condition may be overly restrictive in some cases. In this situation, the COTP may use the waiver authority under 33 CFR 126.11 to maintain an acceptable level of safety without prohibiting reasonable operations on waterfront facilities.

(2) Enforcement. The hot work permit requirements should be enforced to the maximum extent possible.

(a) Where practical, hot work permit enforcement may be performed by local fire departments. However, COTP personnel must occasionally verify that the conditions on the permit are being followed, particularly on facilities that have a history of safety violations.

(b) If hot work is in progress during a facility inspection or monitor verify that the facility (or a vessel moored to the facility) has a permit for the hot work and that the conditions of the permit are being met.

(3) Hot work permits for vessels carrying explosives or other packaged hazardous materials moored at a facility are issued to the vessel under 49 CFR 176.54. Hot work on other vessels moored to a packaged or dry bulk waterfront facility are issued to the facility under 33 CFR 126.15(c).

(4) References. NFPA has published the following standards for hot work:

(a) "Welding and Cutting," NFPA 51.

(b) "Welding Processes," NFPA 51B.

(c) "Control of Gas Hazards on Vessels to be Repaired," NFPA 306.

c. Motor vehicles on the pier. Under 33 CFR 126.15(d), transient trucks and automobiles are allowed to remain on the waterfront facility only long enough to load or unload cargo, equipment, supplies, or passengers.

(1) If a vehicle is waiting to load or unload, it must be attended by a driver.

(2) Vehicle parking on the waterfront facility is permitted only in spaces that are designated for parking and marked off by the facility owner or operator in accordance with local ordinances.

(3) The number of vehicles permitted upon the pier or wharf at one time should be limited to permit free traffic flow.

(4) Vehicle engines must be stopped when loading and unloading cargo.

(5) While on the waterfront facility, filling or draining vehicle fuel tanks or making repairs is prohibited.

d. Equipment on the pier driven by internal combustion engines. 33 CFR 126.15(e) provides safety requirements for equipment driven by an internal combustion engine that is regularly used on the waterfront facility. Such equipment includes forklifts, generators, and pumps, as well as motor vehicles.

(1) The equipment must be kept free from excessive oil, grease, and lint so as not to constitute a fire hazard.

(2) Each piece of equipment must carry an approved fire extinguisher unless the equipment is operating in an area where other facility extinguishers are available on the facility, and the COTP has approved the arrangement.

(3) Equipment that is not attached to the pier or wharf should not be stored or fueled on the pier or wharf. Such equipment should be stored or fueled in designated areas away from the pier or wharf.

e. Rubbish and waste materials. The requirements in 33 CFR 126.15(f) address the fire hazards created by poor housekeeping. Inspections for fire hazards should not be limited to obvious areas, but should include out-of-the-way places, as well. Both the insides and outsides of sheds and other buildings should be examined. Hazards and potential hazards that could cause a fire to start or hinder firefighters should be noted and corrected. Inspectors should be alert to--

(1) Piles of dunnage or scrap;

(2) Rubbish or waste materials on piers or wharves;

(3) Sloppy carpenter and paint shops, etc.;

(4) Railroad cars laden with waste materials;

(5) Inadequate or unsuitable waste cans (rubbish should be kept in metal containers with covers, and removed or emptied at frequent intervals to prevent dangerous accumulations); and,

(6) Hazardous accumulations of dust on trusses, girders, or other structural members.

f. Electrical installations. Under 33 CFR 126.15(h), installations of electrical wiring and equipment on packaged and dry bulk facilities made after 28 August 1951 must be in accordance with accepted safe practices.

(1) Conformance to the National Electric Code and to local ordinances and regulations is considered to meet the safe practices requirement.

(2) Electrical equipment, fittings, and other devices must be approved for use by the UL, FM, or CSA.

(3) NBS approval is also acceptable under 33 CFR 126.15(h), however NBS no longer issues such approvals.

(4) All electrical wiring and equipment, including that installed prior to 28 August 1951, must be maintained in a safe condition without defects or modifications that

could cause a fire or personal injury. Defective or dangerous wiring, equipment, and devices must be replaced, removed or permanently disconnected.

(5) During inspections and monitors, personnel should look for the following the electrical hazards:

(a) Conditions which could cause arcing.

(b) Electric motors that are--

[1] Located too near combustible material;

[2] Located in damp places or subjected to corrosive vapors;

[3] Covered with rust, lint or dust;

[4] Burning out because of overloading or low voltage at motor terminals;

[5] Protected by improper overcurrent protection; or,

[6] Producing excessive heat.

(c) Bare wires.

(d) Loose or frayed connections.

(e) Overloaded outlets.

(f) Corroded terminals.

(g) Lack of high voltage signs near transformers and switch boxes.

(h) Defective insulation.

g. Heating methods. Under 33 CFR 126.15(i), heating equipment on packaged and dry bulk facilities must be safely installed and maintained in good operating condition.

(1) The recommended guide for safe installation of heating equipment is the National Board of Fire Underwriters Building Code.

(2) For portable electric heating equipment, approval by CSA, FM, or UL should be used as a guide for safe design, and NFPA 70 should be used as a guide for safe installation.

(3) Adequate clearances must be provided for heating equipment to prevent undue heating of nearby combustible materials.

(4) In addition, 33 CFR 126.15(i) requires that spark arresters be provided if the heater uses solid fuel.

(5) Open fires in lamps, barrels, drums, or similar apparatus are prohibited.

(6) These requirements should be strictly enforced, particularly in areas within 100 feet of a pipe or tank containing flammable products.

(7) During inspections, personnel should look for improper heaters in sheds or shelters on the facility.

h. Maintenance stores and supplies. Under 33 CFR 126.15(g) supplies that are regulated as hazardous materials under 49 CFR Parts 171 through 179 may be kept on designated waterfront facilities only in amounts necessary to meet normal operating requirements. These materials must not be stored on piers or wharves, but in compartments that are remote from combustible materials. The compartments must be designed to provide ready access and safe storage. During inspections, personnel should make sure containers in storage compartments are not leaking or left open so that vapors accumulate in the storage compartment. They should also verify that scrap materials, rags, and other debris are not left in the storage compartment.

i. Fire extinguishing equipment. Fire extinguishing and protection equipment is essential to the safe operation of any waterfront facility. The quantity, type, and location of equipment required for each facility will vary depending upon the types of hazards present.

(1) Under 33 CFR 126.15(j), fire extinguishing equipment must be available on each packaged and dry bulk waterfront facility in adequate quantities, locations, and types.

(2) Once installed, fire extinguishing and protection equipment must be maintained in good condition at all times.

(3) Under 33 CFR 126.15(k) fire appliances such as hydrants, standpipes, fire extinguishers, hose stations, and fire alarm boxes must be conspicuously marked and readily accessible. The color used in marking depends upon local regulations but generally, they are marked in red and their purpose or number shown in white lettering. The markings must be placed high enough that they will not be hidden by cargo, stanchions, columns, risers, or other obstructions.

(4) All locations of fire appliances should be numbered and indicated on the facility's floor plan.

(5) The COTP should work with the local fire authority in determining the adequacy of fire equipment. NFPA 307 and NFPA 10 may be used as guides when determining adequacy of that equipment.

(6) If the fire equipment on a facility is inadequate, the COTP must notify the facility operator of the problem in writing and provide the operator an opportunity to correct the situation.

(7) During inspections, look for improperly marked fire appliances, material blocking access to fire appliances, and appliances that are not functional (excessive corrosion, missing fire hoses, etc.).

---

4. Arrangement of Cargoes and Materials

Cargoes at waterfront facilities must be stowed in an orderly arrangement to permit complete access for firefighting and reduce the risk of fire.

a. Clear areas. Clear areas are required when stacking or arranging cargo or materials on the waterfront facility or in buildings on the waterfront facility.

(1) At least 60 centimeters of clearance must be provided around all stacks or piles of cargo, freight, merchandise, or other materials (33 CFR 126.15(m)(1)). The cleared area must be kept free of rubbish, dunnage, or other obstructions.

(2) Around firefighting equipment and fire alarm boxes, the cleared area must be at least 1.2 meters with a straight aisle at least one meter wide leading to the center aisle (33 CFR 126.15(m)(3) and (4)).

(3) The main aisle must be at least 2.5 meters wide and at least 6 meters wide if fire truck access is required (33 CFR 126.15(m)(5)).

(4) Cross aisles, at least 1.5 meters wide, must be located at least every 23 meters along the facility or within the building (33 CFR 126.15(m)(6)).

b. Stacking. Under 33 CFR 126.15(m)(2), no cargoes, freight, merchandise, or materials may be stacked closer than 90 centimeters from the ceiling of a building or its structural members, nor may they be stacked closer than 30 centimeters from sprinkler heads.

(1) Packaged cargoes, freight, merchandise, or materials that are flammable or combustible may not be tiered higher than 3.7 meters on the waterfront facility. This includes containers as well as pallets, boxes, paper, etc.

(2) This restriction is very broad in scope and is intended to protect older facilities constructed at least partially of wood.

(3) The COTP may waive this requirement; however, the safety implications must be carefully considered. The following NFPA standards should be used as guidelines when considering waivers of cargo arrangement and storage requirements:

STANDARD CODE	TITLE
NFPA 231	Indoor General Storage
NFPA 231A	Outdoor General Storage
NFPA 307	Operation of Marine Terminals
NFPA 490	Ammonium Nitrate

---

5. Occupational Safety

The Coast Guard and OSHA share responsibility for the safety of workers on waterfront facilities handling hazardous materials. The Coast Guard's primary responsibility in this area is the safe handling of hazardous materials. Packaged and dry bulk facilities are covered by the OSHA marine terminal regulations in 29 CFR Part 1917. Inspectors should be aware of these OSHA regulations because they may cover safety situations not covered by Coast Guard regulations. The following safety requirements apply to most waterfront facilities:

a. Lighting. To prevent accidents, waterfront facilities must be adequately illuminated when handling hazardous materials during periods of darkness.

(1) 33 CFR 126.15(l) requires adequate lighting for packaged and dry bulk facilities. This section does not require a specific lighting intensity; however, lighting intensity should meet the OSHA requirements in 29 CFR 1917.123. This regulation requires lighting of at least 55 lux in each active work area, at least 11 lux in other work areas, and at least 5 lux for security purposes.

(2) Measurements of light intensity should, if possible, be made with a light meter.

(3) Lights should be installed over aisles and in other locations where they will not be damaged by vehicle movements or cargo handling.

(4) Light fixtures should be protected by wire guards unless mounted out of the normal reach of equipment and personnel.

(5) Open flame lights and lanterns using kerosene or gasoline are prohibited.

(6) Temporary lighting, when required, must be obtained from battery powered hand lamps or protected electric lamps that are energized from portable electric generators, located outside of the building or off the pier.

b. Cargo handling equipment. No specific Coast Guard requirements have been set for cargo handling equipment on packaged or dry bulk facilities; however, OSHA has set the following requirements:

(1) Cargo slings must meet the requirements in 29 CFR 1917.13.

(2) Ropes, chains, blocks, and hooks must meet the requirements in 29 CFR 1917.42.

(3) Powered industrial trucks must meet the requirements in 29 CFR 1917.43.

(4) Conveyors must meet the requirements in 29 CFR 1917.48.

(5) Spouts, chutes, hoppers, bins and similar equipment must meet the requirements in 29 CFR 1917.49.

c. Warning alarms. Packaged or dry bulk facilities that handle division 1.1 or 1.2 explosives, oxidizing material or blasting agents requiring a permit (primarily ammonium nitrates), or highway route controlled quantities of radioactive material are considered facilities of particular hazard.

(1) 33 CFR 126.16(b) requires these facilities to have warning alarms. Warning alarms are intended to alert approaching vessels and the local community in the event of an imminent explosion or radioactive release.

(2) Each facility of particular hazard must have either a siren or a rotating flashing light that can be heard or seen at least 1 mile away.

(3) The color of the rotating flashing light is not prescribed, however, amber is recommended because it is considered most effective in alerting personnel to a hazard.

(4) The adequacy of warning alarms should be verified during the annual facility inspection by activating the alarm while a member of the inspection team, located 1,600 meters away, determines if it can be seen or heard. Inspectors should be particularly alert to obstructions that could prevent a warning light from being seen from the waterway.

---

6. Security

a. Guards. Trained guards are required in sufficient numbers to provide surveillance of the waterfront facility to deter unlawful entry, deter vandalism, detect fire hazards, detect discharges of hazardous materials, and check the readiness of protective equipment.

(1) Guards should be thoroughly instructed in the operation of fire alarm boxes, fire hoses, portable fire extinguishers, and similar fire equipment. They should know the location of telephones and emergency equipment, emergency fire protection measures, and emergency notification procedures.

(2) The NFPA has developed two standards applicable to guards that may be used in determining the adequacy of guards required under 33 CFR 126.15(a): Guard Service - NFPA 601, and Guard Operations - NFPA 601A.

(3) When determining whether the number of guards provided is adequate for a facility, the COTP should consider the security barriers and detection devices in place.

(4) If the guards are found to be inadequate, the COTP must notify the facility operator of the problem in writing and provide the operator an opportunity to correct the situation.

b. Guard requirement waivers. Under 33 CFR 126.11, the COTP may waive the requirement for guards on packaged and dry bulk facilities where the stationing of guards is impractical or unnecessary.

(1) Waivers for guard requirements should only be considered for small transfer facilities that do not store large quantities of hazardous materials on site. Such a facility may be secured by fencing and monitored by intrusion detection devices, cameras, or random patrols rather than permanent guards.

(2) Before approving waivers from the guard requirements, the COTP must consider the security barriers and detection devices in place, the likelihood of intrusion, the proximity of population centers, and the danger presented by hazardous materials stored at the facility.

c. Security barriers. Fences, walls, and similar barriers act as a deterrent to unauthorized entry onto waterfront facilities handling or storing hazardous materials. Buildings, water bodies, ravines, and similar barriers may also be used to deter entry but may need to be augmented by safeguards such as fences, walls, patrols, surveillance cameras, or intrusion detection devices. Security barriers are not specifically required on waterfront facilities, but they should be considered when determining the appropriate number of guards under 33 CFR 126.15(a).

7. Records

Packaged and dry bulk waterfront facilities are not required to maintain records for the Coast Guard, but should keep Coast Guard inspection reports for their facility and make such reports available to future Coast Guard inspectors. The official Coast Guard record for facility information is the MSIS facility file. The COTP must have a paper file for each facility in the zone to maintain any facility information that cannot be maintained in MISLE including a copy of the worksheet or checklist used during inspections, facility plans, photographs, diagrams, and similar information.

H. ENTRY ONTO PRIVATE PROPERTY

1. General

Entry into private property that is part of a shoreline adjoining U.S. waters may be necessary to undertake immediate response activities and subsequent investigations, and to perform inspections to ensure compliance with regulations. In Commandant (G-LMI) memo 5800 of 25 September 1972, the Chief Counsel of the Coast Guard determined that, in general, Coast Guard personnel have the authority to enter private property on or near navigable waters without a warrant to carry out discharge response activities and related investigations or inspections, and may also conduct warrantless administrative inspections where the property is subject to regulation concerning pollution prevention and hazardous materials.

2. Access Authorized

Inspections should be conducted on a prearranged basis whenever practical, with a representative of the owner or operator accompanying the inspection team. Monitors should be conducted without advance notice while a transfer is in progress. Industry members have, historically, responded to the Coast Guard's needs by permitting inspection personnel almost unlimited access to their property. It is a rare occasion when a Coast Guard member is turned away at the gate.

---

3. Access Denied

When this occurs, the COTP/OCMI must determine what actions are appropriate. If a search warrant is considered necessary, the district commander (dl) should be contacted for assistance. Force must not be used in non-emergency situations. The COTP should point out to an owner who refuses entry to his or her property that:

a. A packaged, dry bulk, or liquefied hazardous gas facility's general permit may be revoked if an inspection is not completed. Without an inspection, there can be no verification that the facility or structure is entitled to a permit to continue operations. For the relevant regulations, see 33 CFR 126.31 and 160.109.

b. Vessels may be prohibited from mooring at the facility, to prevent possible damage to the vessel brought about by hazardous conditions. A vessel already moored may be required to depart the facility for the same reason For the relevant regulations, see 33 CFR 160.111.

I. CORRECTIVE ACTIONS AND PENALTY AUTHORITY

---

1. Corrective Actions

Effective corrective actions are necessary to deter repeat discrepancies that endanger lives, property, and the environment. At a minimum, the discrepancy must be corrected. Additional actions provide a greater incentive for future compliance. Each discrepancy found and each corrective action taken must be documented in MISLE. The COTP must select an appropriate action for each discrepancy depending upon the seriousness of the discrepancy and the facility operator's history of compliance. MSM Volume I, Administration and Management, COMDTINST M16000.6 (Series), Chapter 4.provides additional guidance on selecting appropriate actions. If a civil penalty is selected, the COTP must recommend an appropriate penalty using the guidance found in Civil Penalty Procedures and Administration,

COMDTINST 16200.3A. For each discrepancy found, one or more of the following actions may be taken:

a. On-the-spot correction.

b. Violation case: COTP Letter of Warning issued.

c. Violation case: Forwarded to district commander for civil penalty action. (By law, all violations of 49 CFR Parts 171-179 requirements must be forwarded for civil penalty action by the District Commander.)

d. COTP Order (to suspend transfer, prohibit vessels from mooring at facility, etc.).

e. Action against a facility's Letter of Adequacy or General Permit.

f. Referral to a U.S. Attorney for prosecution (in extreme cases).

---

2. Penalty Authority

The correct penalty authority must be cited when developing a violation case. The appropriate penalty authorities are listed below. Further guidance on appropriate penalties for violation cases is contained in Civil Penalty Procedures and Administration, COMDTINST 16200.3A.

a. Bulk liquefied natural gas waterfront facilities. The regulations in 33 CFR Part 127 are issued under the statutory authority of the PWSA. Violations are subject to the civil and criminal penalties under 33 U.S.C. 1232. The maximum civil penalty is $25,000 per violation and each day of a continuing violation constitutes a separate violation.

b. Bulk liquefied hazardous gas waterfront facilities. The regulations in 33 CFR Part 126 are issued under the statutory authority of the PWSA. Violations are subject to the civil and criminal penalties under 33 U.S.C. 1232. The maximum civil penalty is $25,000 per violation and each day of a continuing violation constitutes a separate violation.

c. Dry bulk waterfront facilities. The regulations in 33 CFR Part 126 are issued under the statutory authority of the PWSA. Violations are subject to the civil and criminal penalties under 33 U.S.C. 1232. The maximum civil penalty is $25,000 per violation and each day of a continuing violation constitutes a separate violation.

d. Packaged hazardous material waterfront facilities. These facilities are also regulated under 33 CFR Part 126 and violations of those requirements are subject to the civil and criminal penalties under 33 U.S.C. 1232. Packaged hazardous materials are also subject to the requirements in 49 CFR Parts 171-179, which are issued under the HMTA. Those violations are subject to the penalties under 49 U.S.C. 1809, which provides for a maximum civil penalty of $25,000 per violation or possible criminal prosecution. The law requires a minimum penalty of at least $250 per violation. Therefore, all violations of the 49 CFR Parts 171-179 requirements must be forwarded for civil penalty action by the District Commander.

CHAPTER 9: ALTERNATE COMPLIANCE PROGRAM

A. INTRODUCTION

Title 46 U.S.C. Chapter 33 requires that certain vessels possess a Certificate of Inspection (COI). Owners of U.S. vessels may receive a COI by one of three means--

a. The traditional means of having a Coast Guard Marine Inspector conduct an examination;

b. Participating in the Streamlined Inspection Program (SIP); or

c. Participating in the Alternate Compliance Program (ACP).

The ACP maintains existing levels of safety while eliminating duplicative plan review and inspection tasks traditionally conducted by both the classification society and the Coast Guard. Owners of certain U.S. tank vessels, passenger vessels, freight vessels, tank vessels, offshore supply vessels, miscellaneous vessels, (including integrated/articulated tugs and barges, vessels built and inspected to the High Speed Craft Code (HSC)), and Mobile Offshore Drilling Units (MODUs) may elect to enroll in the ACP as an alternate method for vessel design, inspection, and certification. New vessel categories may be added through the regulatory process. Check the ACP Website for the most up-to-date information at www.uscg.mil/hq/g-m/mse/acp/acp.htm U.S. and foreign classification societies may be designated as an ACP classification society (see definitions below). The ACP should not be confused with a "Qualship" type program, as it is merely an alternative to traditional inspection standards.

B. AUTHORITY

Title 46 U.S.C. 3316 allows the Coast Guard to delegate certain U.S. merchant vessel plan review, new construction, and periodic inspection to the American Bureau of Shipping (ABS) or another classification society recognized by the Secretary as meeting acceptable standards for such a society. Title 46 CFR Part 8 provides detailed regulations for the ACP. Additional guidance can be found in Navigation and Inspection Circular (NVIC) 02-95, Change 2, The Alternate Compliance Program (http://www.uscg.mil/hq/cg5/nvic/1990s.asp#1995).

C. DEFINITIONS

1. ACP Officer

The person tasked by the Officer in Charge, Marine Inspection (OCMI) with the routine coordination and administration of the ACP at the local Coast Guard field unit maintains contact with the local ACP classification society offices, enrolled vessel owners, operators and their designated representatives, and other relevant parties to verify that delegated activities are being performed at the intervals and in the manner prescribed by the terms of the ACP. The ACP Officer designation should be made in writing.

2. Annual Examination

The Coast Guard's annual oversight examination verifies classification society adherence to the ACP, evaluates crew performance, and verifies materiel safety. The COI is typically renewed or endorsed during the annual examination.

3. Authorized Classification Society (ACS)

An Authorized Classification Society (ACS) is a recognized classification society (46 CFR Part 8), that has been delegated the authority to conduct certain functions and certifications on U.S. flagged vessels on behalf of the Coast Guard. The classification society must enter into an agreement with the Coast Guard for individual certificate authorizations (load line, tonnage, safety construction, etc). An ACS may receive the additional ACP authorization (as a "ACP ACS") from Commandant (CG-5P) after satisfactorily performing certain prescribed functions for at least two years. A current list of ACSs may be found on the Web at www.uscg.mil/hq/g-m/mse/acp/acp.htm

4. Class Rules

Class Rules are standards developed and published by a classification society and are for the design, construction, and certification of commercial vessels.

5. Classification Society's ACP Coordinator

The individual appointed by a classification society acts as a central point of contact for matters involving the ACP and functions delegated by the Coast Guard.

6. Delegated Function

Delegated function is related to the Coast Guard commercial vessel inspection program that has been delegated to a classification society. Delegated functions may include issuing international convention certificates and/or examinations necessary to participate in the ACP.

7. Enrolled Vessel

An enrolled vessel is enrolled in the ACP.

8. LORACS

LORACS is the Coast Guard's Liaison Office for Recognized and Authorized Classification Societies. The LORACS function is adminstered by the Coast Guard Headquarters Office of Commercial Vessel Compliance, Commandant (CG-CVC-1).

---

9. Program Manager

Coast Guard Headquarters, Office of Commercial Vessel Compliance, Commandant (CG-CVC-1) is the Program Manager. The Program Manager is tasked with arranging certain oversight activities ensuring overall ACP administration, and policy development of the ACP.

---

10. Periodic Oversight Re-Examination

Periodic oversight re-examination is additional Coast Guard oversight in between annual examinations initiated either by the OCMI or directed via Commandant (CG-CVC) risk assessments.

---

11. Recognized Classification Society

A classification society recognized by the Coast Guard meets minimum standards for general characteristics and performance of a quality classification society. This is the first step in becoming an ACS.

---

12. Streamlined Inspection Program (SIP)

The SIP provides another alternative for owners and operators to comply with Coast Guard inspection requirements. The ACP and SIP are entirely separate and independent programs. No vessel may be enrolled in both programs simultaneously.

NOTE: See MSM Volume II, Materiel Inspection, COMDTINST M16000.7A (Series), Chapter B10 on SIP, and NVIC 2-99 Part A and Part B for complete information on SIP implementation. Also, information on SIP can be accessed from the SIP Web site at: https://homeport.uscg.mil/mycg/portal/ep/browse.do?channelId=-18346.

D. ACP AUTHORIZED CLASSIFICATION SOCIETY

1. ACP Approval Process

A list of classification societies and their authorizations may be found on the Web at www.uscg.mil/hq/g-m/mse/acp/acp.htm.

Before being considered for ACP authorization, an ACS must meet the minimum standards of 46 CFR Part 8.230 listed below.

To obtain ACP authorization, a classification society must--

a. Be ISO 9000 (or equivalent) compliant;

b. Become a recognized classification society;

c. Be delegated an international certificate issuing authority as an ACS;

d. Complete a minimum 2-year probationary period as an ACS;

e. Develop a U.S. supplement;

f. Obtain U.S. supplement approval by Commandant (CG-ENG); and

g. Be accepted as an ACP ACS participant.

NOTE: ACP is an additional separate authorization granted to an ACS that has been authorized to issue at least all of the following certificates to a U.S. vessel: International Load Line Certificate, SOLAS Cargo Ship Safety Equipment Certificate, SOLAS Cargo Ship Safety Construction Certificate, IOPP (MAROPOL) Certificate, and International Tonnage Certificate.

2. U.S. Supplement

Prior to being delegated the authority necessary to participate in the ACP, the classification society must develop a U.S. supplement or other document that incorporates specific Coast Guard requirements not covered in its class rules or international convention. These requirements include all standards applicable for issuing a COI that are not addressed by either the class rules of that classification society or by applicable international conventions. Development of a U.S. supplement for each ACP classification society ensures that the class rules, when combined with standards in applicable international conventions, provide a level of safety standards equivalent to traditional Coast Guard regulatory requirements. Commandant (CG-ENG) is the approving authority for each U.S. supplement.

U.S. supplements are not necessarily inclusive of all vessel types. An ACS may only engage in ACP compliance for vessel types (certificated under certain Subchapters of 46 CFR) for which they have an approved U.S. supplement. The U.S. supplement that was used when the vessel was enrolled must be used for the vessel's entire operational life (except for major modifications or conversions).

a. High speed craft (HSC). HSC may enroll in the ACP if their ACS has established rules for HSC and is authorized for the subchapters of 46 CFR for which the vessel would be certificated. In this case, vessels may be inspected to the ACP standard using the International HSC Code, classification society rules, and the most current HSC NVICs (as a universal supplement). A vessel may be enrolled if it holds a HSC Safety Certificate, a Permit to Operate HSC, a Record of Equipment for HSC, as well as other applicable International Certificates (e.g., International Oil Pollution Prevention Certificate, Safety Management Certificate, etc.).

b. Integrated and articulated tugs and barges. Integrated and Articulated Tugs and Barges (ATB\ITB) may enroll in the ACP. ATBs and ITBs must, in addition to the criteria above, be inspected using an approved U.S. supplement which specifically addresses the barge/tug connection system and the most current ITB NVIC. Further, only ATBs and ITBs designated as “Pushing Mode” in accordance with NVIC 2-81, Change 1 (http://www.uscg.mil/hq/cg5/nvic/1980s.asp#1981) and subsequently required by their COI to be operated in a combined configuration may be enrolled in the ACP. The ACP does not apply to barges that are not part of an articulated or integrated unit.

c. Inspection intervals. As a general rule for ACP vessels, the frequency of survey intervals will be governed by the U.S. interpretation of international conventions or the classification society’s intervals for items such as inspection of pressure vessels, stern tube lube oil analysis, boiler safety valves, fuel tank internals, water tube boiler hydrostatic tests, and sea valve internal structural examinations, drydockings (annual for passenger vessels), etc.

---

3. International Certificates

Under the ACP regime, the classification society should issue all international certificates for which they have authorization, except those that the Coast Guard cannot delegate (i.e., International Ship Security Certificate/Continuous Synopsis Record). Public vessels may satisfy international convention certificate requirements with Statements of Voluntary Compliance issued by the classification society. International Safety Management (ISM) documentation should typically be issued by the same ACS that is used for the ACP, but that is not a requirement. ISM services may be provided by a different ACS. A classification society may be delegated the authority to issue the following international convention certificates on behalf of the Coast Guard:

a. International Load Line Certificate.

b. International Tonnage Certificate.

c. SOLAS Cargo Ship Safety Construction Certificate.

d. SOLAS Cargo Ship Safety Equipment Certificate.

e. International Certificate of Fitness for the Carriage of Dangerous Chemicals in Bulk.

f. International Certificate of Fitness for the Carriage of Liquefied Gases in Bulk.

g. IMO Mobile Offshore Drilling Unit Safety Certificate.

h. MARPOL 73/78 International Oil Pollution Prevention Certificate.

j. MARPOL 73/78 International Pollution Prevention Certificate for the Carriage of Noxious Liquid Substances in Bulk.

k. SOLAS Passenger Ship Safety Certificate.

l. High-Speed Craft Safety Certificate.

m. MARPOL 73/78 International Air.

o. ISM Code Document of Compliance (issued to operating company office).

p. ISM Code Safety Management Certificate (issued to vessel).

MARPOL 1 ANNEX	ANNEX FULL TITLE	CLASSIFICATION SOCIETY AUTHORIZATION STATUS
Annex I	Regulations for the Prevention of Pollution by Oil.	Full authorization.
Annex II	Regulations for the Control of Pollution by Noxious Liquid Substances in Bulk.	Full authorization.
Annex III	Regulations for the Prevention of Pollution by Harmful Substances Carried by Sea in Packaged Form.	Full authorization (see note 2 below).
Annex IV	Regulations for the Prevention of Pollution by Sewage from Ships.	Limited authorization (see note 3 below).
Annex V	Regulations for the Prevention of Pollution by Garbage from Ships.	Full authorization (No certificate).
Annex VI	Regulations for the Prevention of Air Pollution from Ships. International Air Pollution Prevention Certificates & Supplements. Engine International Air Pollution Prevention Certificates (This is issued by the Environmental Protection Agency (EPA)).	Full authorization

NOTE 1: Only Commandant (CG-CVC) may approve extensions for certificates issued under international conventions.

NOTE 2: The Coast Guard's policy has been to endorse the COI with a statement that the vessel complies with MARPOL Annex III (where applicable) in lieu of issuing a separate certificate. However, some foreign port States (Italy in particular) demand a separate certificate, even though MARPOL does not specify that a separate certificate is required or even available. U.S. owners who desire a MARPOL III Statement of Compliance may obtain one from an ACS.

NOTE 3: See Commandant (CG-CVC)) NVIC 01-09 (http://www.uscg.mil/hq/cg5/nvic/pdf/2009/NVIC_1-09.pdf). The United States is not signatory to MARPOL 73/78, ANNEX IV, therefore U.S. vessels may comply with the marine sanitation device standards in 33 CFR Part 159 or may comply with MARPOL 73/78, ANNEX IV. See NVIC 01-09. An ACS may issue Statements of Voluntary Compliance if the vessel fully meets Annex IV requirements.

4. Certificate Revocation

Class surveyors should make recommendations to the OCMI to revoke/rescind international certificates for significant or numerous deficiencies to lifesaving, firefighting, watertight integrity, and pollution prevention materiel and equipment. (Refer to "Operational Control Actions and Detentions," which are discussed later in this chapter.)

E. TRANSFER OF CLASS

Vessels enrolled in the ACP may transfer to another classification society with the ACP authorization with prior Commandant (CG-CVC) approval. The transfer must be completed in accordance with IACS Procedural Requirement No. 1A, which may be found at http://www.iacs.org.uk/publications/default.aspx. In addition, the application procedures for new entries will be completed including completion of a hand-over survey attended by the gaining classification society surveyor, the losing classification society surveyor and a Coast Guard marine inspector. Upon transfer of class, Marine Information for Safety and Law Enforcement database (MISLE) entries must be made as discussed in O.4 of this Chapter.

1. Gap Analysis

Before the hand-over survey, the gaining classification society is responsible for completion of a thorough gap analysis to determine variations between the two societies' rules and U.S. supplements with regard to the vessel. This analysis will be documented and submitted to Commandant (CG-ENG) for review and approval at least 30 days before the transfer of class. A comprehensive list of plans should accompany the gap analysis for administrative use. Specific plans should be provided upon Coast Guard request to facilitate gap analysis oversight as required. After the transfer of classification societies, the vessel will be inspected using the gaining classification society's rules, the gaining classification society's U.S. supplement. and international conventions. Marine inspectors should pay particular attention to potential disparities between classification society U.S. supplements to avoid regulatory gaps during the transfer inspection.

F. INSPECTION ACTIVITIES RETAINED BY THE COAST GUARD

The Coast Guard retains authority for the following marine inspection activities:

a. All manning issues (including the determination of eligibility for reduced manning based upon a classification society-approved automation system).

b. Marine casualty investigations and analysis.

c. Drydock interval extensions beyond 90 days.

d. Approval of a vessel's participation in the Under Water Survey in Lieu of Drydocking (UWILD) Program.

e. Permits to Proceed.

f. Load Line exemptions.

g. Excursion permits.

h. Changes of employment.

i. Critical Area Inspection Plan (CAIP) enrollment and exams.

j. Waivers, exemptions or equivalencies to international conventions; (examples: load line, SOLAS, and MARPOL).

k. Alternative compliance with 72 COLREGS.

l. Extensions for convention certificates.

m. Approval of security plans.

n. Approvals of safety equipment, materials, installations, and qualifications required by 46 CFR Part 2.75.

o. Continuous Synopsis Records (CSR).

p. International Ship Security Certificates (ISSC).

q. Major conversion determinations.

r. Ballast water management compliance and enforcement.

---

1. Marine Casualties

The Coast Guard retains all marine casualty investigation functions including machinery automation failures. ACP enrolled vessels must properly notify the Coast Guard of all reportable marine casualties. The vessel's master is responsible for making initial notification of a casualty to the Coast Guard, and for preparing and submitting a Report of Marine Accident, Injury, or Death (Form CG-2692) to the cognizant OCMI. Class surveyors may complete a damage survey and make repair recommendations, however, the OCMI retains authority to review and approve repair proposals, as an oversight option. Surveyors should notify the OCMI if a vessel fails to satisfactorily complete automation testing since manning levels could be affected. Refer to 46 CFR 62.50 for requirements. Multiple equipment or

system failures could indicate Safety Management System (SMS) discrepancies. Materiel and crew deficiencies should trigger at least a cursory "SMS review" of the particular system which has apparent non-conformities.

G. VESSEL ENROLLMENT

1. Application

A vessel owner or operator wishing to have a vessel certificated under the ACP may apply by submitting an Application for Inspection of U.S. Vessel, Form CG-3752 to the cognizant OCMI. The form must indicate the owner's desire to enroll the vessel in the ACP and designate an ACS. The vessel must be in compliance with the ACS's class rules, U.S. supplement, and applicable international maritime safety and pollution prevention conventions. Special care should be taken to ensure that Maritime Security Program (MSP) vessels are not inadvertently enrolled in the ACP. While an MSP vessel is eligible to enroll, the vessel does not need to develop or meet the U.S. supplement standards. Therefore, a vessel typically cannot comply with both the MSP and ACP standards at the same time. A vessel should not have both MSP and ACP endorsements on the COI.

NOTE: Vessels need not be on dedicated international voyages to qualify for the ACP. The intent, rather, is to ensure that the vessels meet the standards required for international certification.

a. Pre-requisites. Enrolled vessels must--

(1) Have a valid COI;

(2) Be "classed" by an ACP ACS (generally, a valid certificate for hull and machinery issued by the classification society is evidence that a vessel is "classed");

(3) Be subject to international conventions and have valid international certificates; and

(4) The vessel must not qualify for involuntary disenrollment as described in H.1 of this Chapter.

NOTE: For new construction, Commandant (CG-CVC) may enroll vessels into the ACP while they are in the process of obtaining all of the above.

b. Novel design prohibitions. Vessels with novel or especially complex designs or operations, for which the classification society has no rules approved by the Coast Guard and/or the Coast Guard has no regulations or policies developed for a particular application, are not to be permitted to enroll in the ACP. For new

construction, re-flags, and major conversions, Commandant (CG-CVC) will consult with the Marine Safety Center (MSC) to make novel design determinations before enrollment. The MSC will make recommendations to Commandant (CG-CVC) within five working days of receiving the request.

c. Meeting with MSC. The owner or its agent should schedule a meeting with the MSC after the Application for Inspection has been submitted.

(1) Discussion of the gap analysis with the owner's representative and the ACS, if one is being used, must be conducted in order to identify major issues at the beginning of the project. Points of contact should be agreed upon during the meeting so that all information during the process is directed to the correct parties.

(2) If the vessel is to be enrolled in the ACP, the point of contact on behalf of the USCG will be the ACS authorized to participate in the ACP. The purpose of the meeting is to identify problem areas early in the plan review process, verify the applicable vessel inspection alternative standards for the certification, and reduce the possibility that vessel certification will be delayed. In addition, members of the Commandant (CG-CVC) and other Headquarters staff may attend the meeting to address any policy issues pertinent to the process.

d. Oversight Plan. An Oversight Plan is highly recommended for any ACP enrollment involving modifications/conversions, new construction projects and passenger vessel enrollments. The representatives for the ACS and the OCMI must meet at the beginning of the project to establish the oversight plan. Further information and templates for the plan can be found in the Enclosure 1 of the reflag NVIC 10-81 CH1.

e. New construction and major conversions. New construction projects and major conversions will be provisionally enrolled at the beginning of construction pending successful construction and plan review oversight, as well as completion of all required certificate issuance and final hand-over survey. A second application must be made to the OCMI near the end of construction to schedule a final hand-over survey. For new construction or major conversions, a list of plans must be submitted to the MSC electronically via the Electronic Correspondence link on the MSC's Web site (http://www.uscg.mil/hq/msc/). Vessels may not be enrolled until the list of plans is received by the MSC. The MSCs Marine Technical Note 04-03 (series) and the reflag NVIC 10-81 CH1 provide in depth information on plans required to be submitted.

2. Eligibility and Data Transfer

Once the OCMI determines that a vessel meets the criteria for enrollment, a copy of the vessel's MISLE record (COI and the critical profile) and a copy of the Inspection of U.S> Vessels, CG-3752 should be sent to the designated ACP Classification Society Coordinator by the OCMI. Contact the LORACS for assistance if needed at (202) 372-1233.

---

3. Processing

The ACP Classification Society Coordinator enters the appropriate MISLE details into the vessel's class computer record, including outstanding deficiencies and special notes. When the computer details are correct, arrangements should be made for the hand-over survey. Follow-up between the involved parties is encouraged to ensure that the data is properly transferred.

---

4. Hand-Over Survey

The ACS surveyor and a Coast Guard marine inspector will jointly conduct the hand-over survey. The survey will consist of the mandatory annual survey required for the Cargo Ship Safety Construction Certificate, the Cargo Ship Safety Equipment Certificate and the International Oil Pollution Prevention Certificate. Any certificate renewal, annual endorsements, or annual class surveys should be completed as part of the hand-over survey whenever possible.

All Coast Guard issued convention certificates will be withdrawn and class issued certificates issued in their place. Class surveyors are familiar with this process of certificate conversion that is commonplace during a transfer of class. It is expected that the owner's representative will try to schedule the hand-over survey at a time that harmonizes with the vessel's window of surveys. The inspector and the surveyor must co-sign or endorse any certificates on board with the exception of the COI, which is signed, issued and endorsed only by the Coast Guard. The hand-over survey should be detailed enough to ensure that any nuances or unique compliance aspects are thoroughly understood by both the class surveyor and the Coast Guard inspector. After completion of a hand-over survey, the OCMI should notify Commandant (CG-CVC) of the success or failure of the survey.

a. Major non-conformities during hand-over survey. If, during the hand-over survey, ISM Code major non-conformities are discovered, the vessel will not be enrolled in the ACP. Instead, the deficiencies must be corrected as per normal Coast Guard policy. An external shipboard audit must be directed and observed by the OCMI. In addition, the cognizant OCMI should attend the external auditor's follow-up audit not later than 90 days after the original hand-over survey. Commandant (CG-CVC) must be notified if major non-conformities in the SMS are discovered during a hand-over survey.

b. Any vessel denied entry into the program due to the discovery of major non-conformities during the hand-over survey will remain in the traditional inspection program for an additional calendar year. The vessel may reapply after one year. The hand-over survey will be conducted with emphasis on the vessel's SMS. It is intended that the company use the additional year to bolster and enhance their SMS.

---

5. Notification of Enrollment

a. OCMIs must notify Commandant (CG-CVC-1) via most expeditious means (preferably faxed or e-mailed signed endorsement memo) of the results of the hand-over survey and recommendations regarding ACP enrollment. Correspondence should include--

(1) The vessel's name and official number;

(2) The ACS;

(3) The CFR subchapter for which an alternate standard will be applied;

(4) The OCMI’s recommendation regarding suitability for the ACP;

(5) The mailing address of the requesting party; and

(6) A specific point of contact for the requesting party.

b. A copy of the vessel's Application for Inspection should also be forwarded to the MSC at the same time so they may start a vessel oversight file.

c. Commandant (CG-CVC) notifies the vessel's owner by letter (with a copy to the classification society's ACP Coordinator, the OCMI, the MSC, and the LORACS) of the vessel's enrollment into the ACP (see MISLE entries noted in O of this Chapter).

H. VESSEL DISENROLLMENT

---

1. Involuntary Disenrollment

a. The Program Manager Commandant (CG-CVC) must consider an ACP enrolled vessel for disenrollment after notification of one or more of the following:

(1) Revocation of the vessel's COI.

(2) Revocation or ineligibility for any of the required International Convention Certificates.

(3) Notification of removal of the enrolled vessel from Class.

(4) A recommendation from the ACP ACS to disenroll the vessel.

(5) A pattern of two or more Port State Control (PSC) detentions or U.S. operational controls (e.g., COTP or "No Sail" Vessel/Facility Inspection Requirements, CG-835s for critical systems) within a 12 month period.

NOTE: Only Commandant (CG-CVC) can make involuntary disenrollment determinations for vessels. Commandant (CG-CVC) must carefully compare Port PSC detentions against the definitions of International Safety Management Code "major non-conformity."

Caveat - Vessels detained by sovereign port States for isolated incidents (oil in the bilges or deficiencies caused by an act of God for which the vessel has not had the opportunity to address) which under current Coast Guard Policy may not have resulted in an Operational Control, may be downgraded by Commandant (CG-CVC).

b. The ACP seeks to achieve the same goal as Coast Guard inspections, i.e. consistent compliance with minimum regulatory safety and environmental standards. Although the majority of ACP vessels exceed the minimum standards, this performance is not required by law or regulation, and is therefore also not required under the ACP. Vessels that would be eligible for a Coast Guard COI by meeting minimum standards are equally eligible to enroll in the ACP. However, vessels that consistently fail to address substandard conditions, habitually pollute, or are subjected to repeated operational controls both in the United States and abroad do not meet the minimum standards.

c. OCMIs observing a pattern of negligence or non-compliance by a vessel operator have a variety of corrective action options available to them within the ACP. Immediate disenrollment from the ACP is not considered a corrective action. OCMIs should work with Coast Guard Program Managers, the classification society representatives and the vessel's owners to seek lasting solutions to a vessel's poor condition or performance. Requiring additional surveys, initiating ISM Code audits and increasing Coast Guard oversight are all viable corrective actions available to OCMIs.

d. The goal of the ACP is for the Coast Guard, the classification society, and the vessel owner to work together to improve the overall safety and environmental compliance of U.S. vessels. Vessels that are habitually non-compliant or that have reached such a state of advanced deterioration that the frequency of system and structural failures is nearly constant should have their COI revoked until a root cause and subsequent solution to the pattern can be found.

e. The ISM Code provides an avenue to address not only the correction of materiel deficiencies at the current inspection, but the creation and maintenance of a management system whereby the company and crew must work to prevent problems before they occur. The old "fix on failure" approach to safety is unacceptable performance for any U.S. certificated vessel. Owners that continually wait for the inspectors, surveyors or port State officials to detect problems before taking corrective action have an ineffective SMS and should be evaluated for revocation of their COI.

---

2. Voluntary Disenrollment

The vessel owner may request disenrollment from the ACP during the anniversary window period of the COI issue date. The owner should submit an Application for Inspection of U.S. Vessel, CG-3752 to the cognizant OCMI that indicates the request to disenroll the vessel from the ACP. The OCMI should take appropriate action to coordinate disenrollment with the ACS. The vessel owner may re-enroll in the ACP at any time following a voluntary disenrollment, but not before the first anniversary. Re-enrollment examinations should be scheduled so as not to interrupt certificate harmonization.

---

3. SIP Enrollment or Re-enrollment in ACP

Vessels that are disenrolled from the ACP at the owner's request may not request to enroll in the SIP or renewal in the ACP until the next anniversary date of the COI's issue. If re-enrolled with the same classification society, the U.S. supplement applicable during the original term of enrollment will remain applicable. Vessels re-enrolling in the ACP with a different classification society must meet the current U.S. supplement for that ACS. Vessels that are disenrolled from the ACP by the Coast Guard for cause may not request to enroll in the SIP or to re-enroll in the ACP for a period of five years.

---

4. Disenrollment Inspection

Vessel operators should submit an Application for Inspection to the OCMI specifically requesting disenrollment. When possible, vessel operators are encouraged but not required to cite the reasons for voluntary disenrollment. A Coast Guard marine inspector will attend vessels disenrolling from the ACP and inspect for certification as if the vessel was not enrolled in ACP. An invitation will be extended to the ACP Classification Society Surveyor to attend.

Upon disenrollment, the OCMI must ensure that all MISLE inspection dates are restored and that the Program Manager is promptly notified. The vessel will then become subject to inspection and examination intervals as required by applicable provisions of Coast Guard regulations, publications, and directives. Upon disenrollment, the cognizant OCMI should note in the inspection summary which U.S. supplement was used and retain a copy of that version in the vessel's file for future reference, (see H.5 of this Chapter). Additionally, the OCMI should forward a memo to Commandant (CG-CVC) announcing the disenrollment and return to traditional inspection status. Commandant (CG-CVC) will officially disenroll the vessel and notify the vessel owner by letter. The memo should include the vessel operator's application for disenrollment.

5. Standards to be Used After Disenrollment

During any period that the vessel is subject to Coast Guard inspection following disenrollment, it will be inspected to the same standards as it was under the ACP, i.e., class rules, international conventions, and the ACS U.S. supplement. However, repairs, modifications, conversions and equipment renewals will comply with the applicable CFR and Coast Guard policies. The Coast Guard does not issue International Load Line Certificates or provide tonnage measurement services. These services must be provided by an ACS. Upon disenrollement, MISLE entries must be made as discussed in O of this Chapter.

I. CERTIFICATE OF INSPECTION

1. Classification Society's Inspection

The ACS will conduct certain activities (surveys, tests, inspections and examinations) on a vessel and document its compliance with applicable international requirements; the inspection classification society's class rules, and the U.S. supplement.

NOTE: Only the flag State administration is authorized to approve extensions for certificates issued under international conventions. In the case where the ACS requests an extension to a convention certificate, the request must be forwarded to Commandant (CG-CVC) for approval.

2. Coast Guard Inspection and Authority

The Coast Guard's examinations will consist of those activities that have not been delegated to the ACS under the ACP (e.g., witnessing drills and assessing crew profiency in handling shipboard emergencies).

a. USCG administrative review. The cognizant OCMI will conduct an administrative review of the reports of activities performed by the ACS, and then follow-up this review with a vessel examination. The administrative review of reports and international certificates will determine if vessel equipment, components, and systems were examined at appropriate intervals using proper procedures.

b. U.S. Coast Guard authority. The Coast Guard remains the final authority for the issuance or revocation of a COI. The ACP classification society may not endorse or issue the COI. The ACS surveyor must notify the local OCMI if conditions exist that require revocation of the COI.

J. COAST GUARD RESPONSIBILITIES

1. Cognizant OCMI

General responsibilities of the cognizant OCMI under the ACP are to--

a. Make recommendations to Commandant (CG-CVC) for vessel enrollment;

b. Arrange for completion of the required hand-over survey upon application for enrollment into the ACP;

c. Ensure that equivalent levels of safety are maintained on enrolled vessels as compared to vessels that undergo traditional Coast Guard inspections;

d. Issue COIs to enrolled vessels;

e. Conduct prescribed oversight examinations on enrolled vessels using Commandant (CG-CVC) risk assessments;

f. Take necessary control action of substandard ACP vessels;

g. Make recommendations to the LORACS for oversight attendance by the Traveling Inspectors staff or the LORACS;

h. Investigate marine casualties;

i. Upon notification of potential or conformed ISM Code/SMS major non-conformities by an ACS, the OCMI must notify the LORACS and Commandant (CG-CVC);

j. Notify the LORACS of any surveyor training or qualification deficiencies; and

k. Assist Commandant (CG-CVC) and LORACS with ACS Regional and Port Office quality audits as requested.

2. ACP Officer

ACP officers must have the qualifications and experience necessary to accurately review reports of activities submitted by the ACS and be able to determine whether or not an enrolled vessel is in substantial compliance with applicable laws, international conventions, and classification society rules. ACP officers must be familiar with the applicable classification society rules, U.S. supplements, and international regulations applicable to enrolled vessels. The ACP officer should maintain (either hard copy or electronically) copies of all of the U.S. supplements (current and historical) for appropriate ACSs. The ACP officer should be well versed in the oversight program and be designated in writing by the OCMI.

---

3. Program Manager

The Program Manager, Commandant (CG-CVC), is responsible for overall administration and management of the ACP. Commandant (CG-CVC) will ensure that an appropriate number of staff members are adequately trained in auditing techniques and ACS processes in order to properly conduct ACS quality audits. Commandant (CG-CVC) will--

a. Review each ACS's process instructions, survey procedures, and checklists;

b. Coordinate with Commandant (CG-ENG) in reviewing and approving changes to the classification society's rules. SOLAS, MARPOL, other international conventions, and the ACP MOAs to ensure that proper changes are made to the U.S. supplements.

c. Enroll new vessels into the ACP and maintain the ACP Vessel Group in MISLE; and

d. Participate in the quality system of each ACS and attend internal and external audits of that system.

NOTE: Commandant (CG-ENG) has the primary responsibility for evaluating and approving the standards contained in a classification society's U.S. supplement.

---

4. LORACS

Beyond providing coordination between the ACSs and the Coast Guard, the LORACS has the primary responsibility for observing ACS quality audits, reviewing approximately 10 percent of the ACS ACP survey records, and tracking corrective action initiated during Coast Guard program oversight. The LORACS is also responsible for the overall coordination of the ACS oversight program, including assessing enrolled ACP vessel performance. Each vessel will be scored using a risk-based model. The LORACS will complete a semiannual risk assessment of enrolled vessels and disseminate the results to OCMIs and the MSC via Commandant (CG-CVC). This risk assessment will enable OCMIs and the MSC to identify program vessels requiring additional oversight and help focus local resources based upon risk. Upon notification by an OCMI or classification society of potential or confirmed ISM

Code/SMS violations, the LORACS must review the vessel's complete history and coordinate with the SMS issuer to determine the necessity of additional oversight, including an external audit. Upon notification by an OCMI of Vessel/Facility Inspection Requirements, CG-835s being issued, the LORACS will notify the ACS to ensure that those Vessel/Facility Inspection Requirements, CG-835s are reflected in the ACS's database records.

---

5. Traveling Inspection Staff, Commandant (CG-5P-TI)

Commandant (CG-5P-TI) should assist the OCMI and LORACS with ACP oversight activities as needed. Commandant (CG-5P-TI), in addition to conducting vessel oversight visits, should also assess ACS surveyor and Coast Guard marine inspector performance within the guidelines of the applicable ACP policy. Commandant (CG-5P-TI) should share observations and recommendations with Commandant (CG-CVC) via the LORACS. Commandant (CG-5P-TI) should conduct oversight of targeted vessels derived from the semiannual risk assessment prepared by the LORACS, as resources permit. Additionally, as resources permit, Commandant (CG-5P-TI) should assist Commandant (CG-CVC) and LORACS with ACS Regional and Port Office quality audits when requested.

---

6. The Marine Safety Center (MSC)

As noted in K.10 of this Chapter, the MSC performs ACP plan review and tonnage and loadline oversight. The MSC may conduct plan review oversight for all new construction, modifications (including major conversions), and vessel re-flags. The MSC is the point of contact for all plan related queries and issues. The ACS should submit a comprehensive list of plans to the MSC as part of the initial new construction or reflag enrollment to allow the MSC to select plans for oversight and better communicate with the involved parties (see MTN 04-03, series).

K. ACP OVERSIGHT

Coast Guard ACP oversight is intended to ensure that enrolled vessels are consistently designed, built, operated, and maintained to a level of safety that is equivalent to vessels certified under the Coast Guard's traditional inspection program.

---

1. The Annual Examination

Every ACP vessel must have an annual examination conducted by the Coast Guard to coincide with COI or reinspection dates. The annual examination must not normally duplicate those items checked by the classification society unless there are "clear grounds" to expand the examination. Annual examinations provide the OCMI with first-hand assessments of the inspection items delegated to the ACS and ensure that these items conform to applicable requirements.

An annual examination closely resembles the scope of a PSC annual examination. A key aspect of an annual examination is to verify that the classification society is meeting its obligations under the ACP rather than traditional materiel inspection. An annual examination will be documented in and follow the general procedures and scope outlined by the appropriate ACP vessel examination books. It should be of similar scope of a foreign vessel examination and include, but is not limited to general procedures and scope outlined by the appropriate ACP vessel examination books. ACP vessels' annual examination should be of similar scope of a foreign vessel examination and include, but is not limited to--

a. Examination of the vessel's certificates, crew licenses and documents;

b. General examination (i.e., "walk-through") of the vessel;

c. Examination and testing of specific equipment, conducting operational tests, and emergency drills to ensure the crew's proficiency at carrying out critical tasks;

d. A review of vessel security and verify the vessel's security plan; and

e. Verification of the SMS, particularly lifesaving, firefighting, and navigation maintenance records. Crew competency should be briefly validated during the walk-through and emergency drills against documented SMS requirements. Prior documented non-conformities should be evaluated for proper resolution during all annual oversight examinations.

NOTE: "Clear grounds" means evidence that the vessel, its equipment, or its crew do not comply substantially to the requirements of the relevant conventions, rules, and U.S. supplement, or that the master or crew members are not familiar with essential shipboard procedures relating to vessel safety or pollution prevention.

---

2. Suggested Preparation

The OCMI should review the ACP classification society's vessel records to ensure that all required surveys are current prior to issuing or endorsing the COI at the annual examination. These records are available online. Links to the appropriate Web sites are available at the Coast Guard ACP Web site. If the record review reveals items that require clarification, the ACP officer must work closely with the local ACS surveyor to identify the current status of

surveys and to ensure that outstanding class recommendations or conditions of class are properly addressed. It may also be valuable to review international PSC data before boarding a vessel.

Below are some useful real-time Web-based resources. Contact the LORACS for access/passwords to classification society databases. For other Websites, contact the individual Web coordinators for access/passwords (where required). Information accessed through the resources listed below may be sensitive or proprietary and should be used for official Coast Guard business only. Inspectors should make printouts of any record that may be helpful during the inspection. The vessels often do not have easy Web access to provide additional copies.

Classification Society Information	**HTML**
(ABS) Safenet	www.eagle.org
(LR) Class Direct Line	www.lr.org
(GL) Fleet On Line	www.gl-group.com
(DNV) DNV Exchange	www.dnv.com
Overseas Detention Information	**HTML**
Paris MOU on Port State Control	www.parismou.org
Tokyo MOU on Port State Control	www.tokyo-mou.org
Equasis	www.equasis.org

3. Periodic Oversight Re-examinations

The Coast Guard may conduct an examination in between annual examinations to ensure that a vessel and its crew have remained in compliance with appropriate U.S. laws and applicable international conventions. For passenger vessels, these examinations are done quarterly and are mandatory unless otherwise directed by Commandant due to operational tempo.

4. Periodic Oversight Re-examination Targeting

For all other vessel types, the ACP risk assessment prepared by the LORACS will suggest the necessity of periodic oversight re-examinations using a risk-based process. The LORACS will provide a semiannual vessel risk assessment to Commandant (CG-CVC) for Coast Guard-wide release. OCMIs may modify ACP oversight based upon the assessment in consideration of local operational tempo and resource availability.

5. Periodic Oversight Re-examination Scope

The periodic oversight re-examination should normally consist of a review of the vessel's certificates, crew licenses and documents, and a general examination conducted by walking through the vessel with an emphasis on examination of items which have been the subject of any recent control actions. Inspectors are also directed to briefly examine the SMS to assure the vessel is following its SMS and non-conformities have been reported to the company, and are either resolved or in the process of resolution. Although intended to be similar to a PSC annual examination, a re-examination may be expanded as necessary if clear grounds exist to indicate that a vessel is not in compliance with applicable classification society rules, the applicable U.S. supplement or international conventions.

---

6. Periodic Oversight Reexamination Scheduling

As a courtesy, the local OCMI, upon receipt of an Advanced Notice of Arrival in a U.S. port, should notify the vessel owner or operator as soon as possible if the OCMI has selected a vessel for a periodic oversight re-examination. The same courtesy should be attempted for vessels visiting foreign ports but nothing should prevent a marine inspector in either situation from conducting a re-examination if the vessel's location is convenient. Typically, OCMIs should not require long distance travel or travel to foreign ports to conduct periodic oversight re-examinations but should capitalize upon opportunities when already in such locations.

---

7. Vessel in Drydock, at Dock, or UWILD Oversight Examinations

The OCMI should perform oversight examinations as resources permit and in consideration of the current risk assessment. Oversight may be tailored to the level that is appropriate to convince the OCMI that the provisions of the ACP are met. Historically, this has been done with roughly 10 percent of general oversight. The OCMI may request assistance from the LORACS, Traveling Inspectors Staff Commandant (CG-5P-TI) or Commandant (CG-CVC) as necessary. The OCMI may make recommendations to the LORACS regarding which ACP vessels should be considered for visits by the LORACS or Traveling Inspectors staff. The oversight examination is to--

a. Verify compliance with the ACP Memorandum of Agreement;

b. Ensure that ACP vessels are held to safety levels that are equivalent to those vessels undergoing the traditional Coast Guard inspection; and

c. Ensure ACS surveyors have been adequately trained to conduct surveys on behalf of the Coast Guard.

Participation in the UWILD program for ACP vessels is approved only by Commandant (CG-CVC-1) and must otherwise follow the policy outlined in NVIC 01-89 (http://www.uscg.mil/hq/cg5/nvic/1980s.asp#1989).

---

8. New Construction and Major Modifications

a. A minimum of 10 percent of each new construction or major modification project surveys that occur in an OCMI's zone will be subject to direct Coast Guard oversight. Oversight must be increased to at least 40 percent for passenger vessels. The OCMI must--

(1) Determine the scope of the oversight;

(2) Check the primary lifesaving equipment that must be approved by the Coast Guard (refer to 46 CFR Subchapter W and the U.S. supplement if applicable); and

(3) Meet with the ACS's Surveyor-in-Charge and the vessel's owner to develop a mutually acceptable oversight plan at the start of each project. No specific format is required but the oversight plan must be sufficiently detailed to meet oversight goals and avoid miscommunication.

b. New construction and major conversion projects can be aided by an Oversight Plan developed and agreed to by all interested parties. A plan can be a useful tool to reduce confusion regarding responsibilities and expectations among the OCMI, the classification society, and the builder. The plan is an ideal vehicle to establish desired procedures for unique situations such as novel design determinations and potential waivers or exemptions. It can also be used to target certain systems for heightened oversight (including plan review). See G.1, above, for additional information.

c. General oversight and focus. The amount of information required for review by the OCMI should be based on several factors including the type of vessel under construction, prior experience with the builder, the vessel's owner and operator, and OCMI's own "comfort level" with the various parties involved in the project. The OCMI should perform oversight on about 10 percent of the hull and vital machinery items surveyed by the ACS during new construction and about 50 percent of lifesaving equipment, firefighting equipment and pollution prevention equipment. Cruise ship construction and major modification oversight should receive higher levels of oversight up to 50 percent of hull, vital machinery, structural fire protection, fire detection and extinguishing systems, and lifesaving.

d. Recommended areas of focus. The following areas are recommended as areas of focus:

(1) Status of applicable plan review and equipment approval.

(2) Status of procedures that require qualification to an established standard (e.g., weld procedures and welder qualifications, NDT test procedures, and technician qualifications).

(3) Approval status of applicable material or equipment.

(4) Number and identities of the ACS's surveyors on the job site at any given time.

(5) Particular equipment, components, or systems scheduled for survey, test, inspection or examination at any given time.

(6) Which equipment, components, or systems have successfully passed final classification society inspection and test.

(7) Whether the project is on schedule with regard to delivery date.

(8) Status of items under appeal by the vessel's owner.

(9) Status of any items that may be left outstanding when the initial COI is issued.

e. Minimum areas of focus. At a minimum, the cognizant OCMI should include a review of the ACS's acceptance of critical vessel systems (refer to the ACS's U.S. supplement) such as--

(1) Lifesaving (primary lifesaving must be CG approved);

(2) Firefighting/fire detection/ structural fire protection;

(3) Cargo transfer;

(4) Pollution prevention;

(5) Steering and propulsion; and

(6) Hull structure.

---

9. Damage Surveys

The OCMI may take the classification society's repair recommendations into account. However, the OCMI retains final authority to review and approve temporary repair proposals in cases in which damage to the vessel involves or is likely to result in a pollution incident or pose a hazard to the safety of a U.S. navigable waterway. Generally, OCMIs should accept the classification society's approval of recommended permanent repairs provided the vessel no longer poses an immediate pollution or navigation safety threat.

---

10. Plan Review and Associated Oversight

In support of the oversight process, each ACS will, as a minimum, provide the MSC with all of the information required in MSC Technical Note 04-03 (series). The classification society should review and approve vessel plans based upon applicable classification society rules, the international conventions/codes, and the U.S. supplement. Plans that are approved on behalf of the Coast Guard should be stamped by the classification society as "Approved on behalf of the U.S. Coast Guard per the ACP" or similar language to distinguish the specific program under which the plan approval was authorized. The Coast Guard may retain plan review authority as deemed appropriate by the MSC. The MSC may request certain plans for oversight review.

Vessel systems requiring extensive equivalency determinations will also be subject to plan review oversight by the Coast Guard. Plan review oversight is not always done in real time as it is meant to be a process verification vs. quality review. If significant items arise from plan review oversight, then scope and detail of oversight may be increased. If there are specific systems or areas of concern to an OCMI, then targeted plan review oversight may be requested.

---

11. Reduced Manning

The OCMI may consider reduced manning requests in accordance with the requirements and procedures of 46 CFR Part 62.50 and the MSM Volume III, Marine Industry Personnel, COMDTINST M16000.8B (Series) based on the classification society's approval of any automation system(s). Annual examinations should include a cursory/random test of several automated systems using the vessels' procedures and a cursory review of the engine room maintenance records. The tests should oversee the classification society's survey performance, obtain a general impression of the systems' condition, and assure that the manning levels remain adequate based upon the crew's proficiency.

L. ACP AUTHORIZED CLASSIFICATION SOCIETY QUALITY AUDITS

Coast Guard representatives with Quality Systems Auditor training will observe 10 percent of the internal and external audits conducted at the ACS's corporate or local offices. Quality audits include a Vessel Records Audit that may be performed, at the request of an OCMI, by the Program Manager or the LORACS to follow up on serious conditions of class or noteworthy non-conformities observed during vessel oversight examinations. In general**,** the distribution of oversight will be as follows:

a. Oversight of Class Headquarters Audits will be conducted by Commandant (CG-CVC) at least biennially.

b. Oversight of Class Regional Offices will be conducted by the Commandant (CG-CVC) and/or Commandant (CG-5P-TI) staff at least annually.

c. Oversight of Class Port Office audits will be conducted by the local OCMI as requested by Commandant (CG-CVC). Where the Port and Region offices are co-located, the OCMI representative should attend the regional office audit in the company of the Commandant (CG-CVC) or Commandant (CG-5P-TI) representative. All Port Offices in the United States must be audited annually either by an internal or external auditor.

d. Classification society audits at any level may be attended by the LORACS in lieu of other Coast Guard attendees.

---

1. Audit Benefits

The audits ensure that--

a. Quality standards and procedures are in place and being observed;

b. Quality records are available and up-to-date; and

c. Corrective actions are taken on non-conformities.

---

2. Specific Items to Consider During Audits

a. Specific items of interest to the Coast Guard during the audits are--

(1) Surveyor training and qualification process is being documented and surveyors have up-to-date qualifications for any surveys they carry out on behalf of the Coast Guard (including the ACPs);

(2) Port and regional offices are implementing their monitoring program of surveyors;

(3) Vessel files and records are accessible to the Coast Guard and contain current and correct information on U.S. vessels;

(4) Internal audits are being carried out;

(5) Notifications to the Coast Guard, when required, are being made at all levels of the organization; and

(6) The instructions to surveyors include relevant information relating to the ACP and other U.S. Coast Guard authorizations.

b. The Coast Guard has agreed to act as observers at internal audits conducted by the quality department of the classification society and external audits conducted either by an independent Quality Registrar who certifies the quality system of the classification society or audits conducted by the Quality Directorate of the International Association of Classification Societies (IACS). A separate Coast Guard audit will not be done. Advanced notice of audits will be provided to Commandant (CG-CVC) (through the LORACS) who will make notifications to Commandant (CG-5P-TI) and OCMI's as appropriate.

---

3. Audit Reports

The person observing the audit will provide a narrative summary of each audit observed to Commandant (CG-CVC) and the LORACS in a Coast Guard Memo. Although no specific format is required, the reports should include at least the following information:

a. A copy of the audit schedule showing departments audited and the titles or jobs of the people interviewed.

b. A copy of the audit findings.

c. An opinion as to whether the work being done under Coast Guard authorization is in conformance with the quality system and the agreement between the ACS and the Coast Guard.

d. Any other information that should be considered by the program manager with regard to the classification society.

NOTE: Information revealed during a classification society quality audit may include proprietary information protected from release to third parties by the Privacy Act of 1974. A notation should be made on the Coast Guard audit summary reports that state the following: "This report may contain information protected under the Privacy Act of 1974 and should be evaluated prior to disclosure to third parties.**"**

---

4. Coast Guard's Role During Audits

All Coast Guard personnel assigned as audit observers must have completed the ISM Code lead auditor training course, either as an independent course or as part of the advanced marine inspector training course. Other training may be accepted in lieu of this requirement on a case-by-case basis by Commandant (CG-CVC). In all cases, the Coast Guard will allow the lead auditor to manage the flow of the audit. In general, the lead auditor will define the time allocated to each area and will work with the audit team to develop the questions to be asked. Coast Guard personnel are encouraged to request that the vessel records pulled for examination include some U.S. vessels. Auditors will generally offer the Coast Guard

observer an opportunity to ask additional questions that may be of specific interest to U.S. flag vessels. Observers should be mindful of the audit schedule and, if they desire detailed information about a particular area, make arrangements to meet with the classification society separate from the audit.

M. DEFICIENCIES AND REPORTING

1. Coast Guard Vessel/Facility Inspection Requirements, Form CG-835

The OCMI may issue a Vessel/Facility Inspection Requirements, CG-835 to an ACP vessel in the same manner as a vessel inspected under the Coast Guard's traditional inspection program. However, issuing a Vessel/Facility Inspection Requirements, CG-835 should be a last resort for vessels enrolled in the ACP. Efforts must be made to have the classification society survey or attend the vessel to concur in the corrective action necessary and to generate an Outstanding Recommendation (OSR) or Condition of Class. If an OSR or Condition of Class is issued, no Vessel/Facility Inspection Requirements, CG-835 should be issued.

If a deficiency exists and no action is being taken by the attending Class Surveyor, a Vessel/Facility Inspection Requirements, CG-835 may be issued. In such a case, the LORACS should be notified and OCMI must provide copies of the Vessel/Facility Inspection Requirements, CG-835s to the ACS's local office. The LORACS will verify proper entry of the discrepancy in the ACS's database. The ACS's local office will forward the Vessel/Facility Inspection Requirements, CG-835 to the classification society's central record division for inclusion into the vessel's computer record as a "Condition of Class." Other cases when a Vessel/Facility Inspection Requirements, CG-835 may be appropriate would be when a surveyor isn't immediately available (i.e., during a periodic oversight re-examination or casualty investigation).

ACS class surveyors, with prior approval by the OCMI, may clear Vessel/Facility Inspection Requirements, CG-835 items by drawing a line through the item, endorsing it as cleared, and forwarding a copy to the local OCMI for MISLE updates. ACS class surveyors may extend or modify outstanding Vessel/Facility Inspection Requirements, CG-835s with the concurrence of the issuing OCMI. ACS class surveyors should also make an appropriate notation on the bridge record card when clearing a Vessel/Facility Inspection Requirements, CG-835.

2. Operational Control Actions and Detentions

When, in the opinion of the OCMI, an ACP vessel is unsafe to proceed to sea, and/or when it poses a serious threat to life, property or the marine environment, appropriate control actions must be taken. These may include suspension of the COI, COTP orders, and other operational control actions include no-sail Vessel/Facility Inspection Requirements, CG-835s for critical systems, i.e., lifesaving, firefighting, watertight integrity discrepancies. U.S. operational control actions for ACP vessels should be reported to the LORACS. Additionally, if during a routine vessel examination, it is discovered that a vessel has been subject to a PSC detention within the past two years the particulars of the detention must be reported to the LORACS. Letters of Deviation should not normally be considered control actions for the purposes of this policy unless the vessel operator fails to adequately address the deficiency for which the deviation was issued.

3. Reporting of Marine Casualties

Masters of vessels enrolled in the ACP are required to report marine casualties to the Coast Guard in accordance with 46 CFR Part 4.

N. RECORDKEEPING

1. Documentation Required for ACP

OCMIs must document ACP examinations in the appropriate ACP Inspection Book, CG-840 which may be downloaded from https://collab.uscg.mil/lotus/myquickr/domestic-vessel-inspections/tools. Information recorded in this booklet should--

a. Identify the documentation reviewed;

b. Identify the individual(s) who conducted the examination, and the name of the surveyor attending hand-over, annual, or other ACP examinations;

c. Briefly summarize the results of the examination;

d. Describe the drills that were conducted and comment on the crew's performance;

e. Describe the condition of the equipment, components and systems that were observed in operation incident to the drills;

f. Record the status of any conditions of class;

g. Summarize SMS compliance; and

h. Cite any other factors relevant to supporting the finding that the vessel is in compliance with the ACP and is fit for its intended route and service.

O. MISLE ENTRIES

1. MISLE Initial Hand-Over

a. Upon completion of a satisfactory hand-over survey, the OCMI must notify the Program Manager, Commandant (CG-CVC), to recommend that the vessel be enrolled in the ACP, preferably by signed memo via email or confirmed fax. Commandant (CG-CVC) must also be notified of an unsatisfactory hand-over survey. The OCMI must document the recommendation in the MISLE inspection results.

b. Upon acceptance of the vessel into the ACP, Commandant (CG-CVC) must update MISLE and include the vessel in the ACP Vessel Group. Upon disenrollment, the Program Manager must delete the vessel from the ACP Vessel Group, at the same time adding a historical note for that vessel indicating that the vessel has been disenrolled from the ACP.

c. OCMIs must complete the MISLE screen field for “ACP COI” under activity sub-type for an initial hand-over survey.

d. The OCMI must make the following entry in the COI operating details:

(1) “This vessel has been inspected and certificated in accordance with the terms and conditions specified in the U.S. Coast Guard’s Alternate Compliance Program (ACP). Date of ACP enrollment (DD MMM YYYY).”

e. The OCMI or the Program Manager must make the following entry as a special note in MISLE:

(1) “This vessel has been inspected and certificated in accordance with the terms and conditions specified in the U.S. Coast Guard's Alternate Compliance Program (ACP). ABS is the ACP Classification Society. Date of ACP enrollment: DD MMM YYYY. ABS Class ID is #######. See Commandant (CG-CVC-1) letter dated DD MMM YYYY for more details.”

f. Special care should be taken to ensure that MSP vessels are not inadvertently enrolled in the ACP. While an MSP vessel is eligible to enroll, the vessel does not need to meet the U.S. supplement standards. Therefore, a vessel typically cannot comply with both the MSP and ACP standards at the same time. A vessel should not have both MSP and ACP endorsements on the COI.

g. MISLE should be updated with sufficient information needed to issue the COI as detailed in N, above, since the bulk of the inspection records will be maintained by class societies. Minimally, this requires all international Convention Certificates and U.S. issued documents, including the International Ship Security Certificate, and Continuous Synopsis Record to be properly updated.

h. Lifesaving equipment inspection due dates, machinery inspection intervals, and drydocking due dates need not be updated in MISLE on ACP vessels since the ACS will be tracking/surveying these items.

(1) Do not delete required equipment, machinery, or safety appliances from the COI; it is only required to delete dates from these COI fields. The ACS is responsible to maintain current records of ACP vessels and provide access to those records to Coast Guard inspectors.

(2) Access to these records may be obtained at any time by contacting the local office of the ACS or may be obtained online where that capability exists (see the table in K.1 of this Chapter). Units that experience problems with obtaining records from the classification society should contact the LORACS for assistance.

i. An adequate narrative should document the hand-over survey which should cover relevant inspection/verification items and any specific compliance nuances unique to the vessel. Narratives should always document major nonconformities and Vessel/Facility Inspection Requirements, CG-835s if issued.

---

2. MISLE Initial Construction

If the vessel enrollment occurs during the construction phase, it may be necessary to use the hull number as the Vessel Identification Number (VIN) while documenting activities in MISLE. Prior to using the hull number as the primary VIN, ensure that no other VIN such as documentation number or CG number has been created. It may be necessary to communicate with the National Vessel Documentation Center to ensure they create the documentation number in the same record. This will help to avoid duplicative records.

---

3. MISLE Post Enrollment

a. Any no-sail Vessel/Facility Inspection Requirements, CG-835s should be entered into MISLE as an operational control using the appropriate drop down menu.

b. Clear deficiencies from MISLE upon notification by the ACS the vessel is in compliance.

c. Maintain COI data as outlined in O.1.c through O.1.f above.

d. Use the MISLE “ACP Annual Exam” drop down selection when conducting an annual oversight examination.

e. Use the MISLE “ACP Periodic Oversight” drop down selection when conducting a periodic oversight re-examination.

f. An adequate narrative should document annual and periodic re-examination oversight, which covers relevant inspection/verification items. Narratives should always document major-nonconformities and Vessel/Facility Inspection Requirements ,CG-835s if issued.

---

4. MISLE Disenrollment and Transfers of Class

a. OCMIs disenrolling vessels must re-enter all dates in accordance with current regulatory inspection intervals. Dates must be based on the last ACP survey dates conducted before disenrollment. Further, OCMIs must add the following phrase on the COI operating details:

(1) "Disenrolled form the ACP on (DD/MMM/YYYY). Vessel should be inspected to the ACP standard using International Convention requirements, Class Rules, and the U.S. Supplement dated (DD/MMM/YYYY)."

b. Vessels being disenrolled must also have a special note to expire after 10 years entered in MISLE briefly explaining the purpose of disenrollment, (i.e., voluntary/involuntary). If disenrollment is involuntary, the narrative should explain in greater detail the specifics leading to the disenrollment. An example follows:

(1) "(Voluntarily/Involuntarily) disenrolled from the ACP on DD MMM YYYY. Vessel should be inspected to the ACP standard using International Convention requirements, Class Rules, and the U.S. Supplement dated DD MMM YYYY. See Commandant (CG-CVC-1) letter dated DD MMM YYYY for more details."

c. Vessels transferring class should also have a special note detailing the change to expire after 10 years as follows:

(1) "Transferred class on DD/MMMM/YYYY. Vessel should be inspected to the ACP standard using International Convention requirements, (gaining classification society) Class Rules, and the U.S. Supplement dated DD MMM YYYY. See Commandant (CG-CVC-1) letter dated DD MMM YYYY for more details."

CHAPTER 10: THE STREAMLINED INSPECTION PROGRAM (SIP)

A. INTRODUCTION TO THE STREAMLINED INSPECTION PROGRAM

1. Introduction

The Streamlined Inspection Program (SIP) is an alternative to traditional Coast Guard inspections and was developed in response to the Maritime Regulatory Reform Initiative. The Initiative challenged the Coast Guard to re-evaluate its regulatory programs and to develop alternatives that would ensure the same level of safety. The information contained in this chapter is intended to provide an overview of the program. The guiding policy document is NVIC 2-99 (Series). NVIC 2-99 and its enclosures, including Inspection Criteria References (ICRs) by the applicable Title 46 subchapter, (Inspection Schedule and Verification (ISV) Form, Exam Checklists, Coast Guard SIP Inspection Form, etc.), are available on CG HOMEPORT (http:\\homeport.uscg.mil).

2. Difference from Traditional Inspections

The significant difference between SIP and the traditional annual inspection program is in the process of how compliance is ensured. SIP is an alternative process for ensuring compliance with the CFR, in which company personnel conduct frequent, periodic examinations of the various vessel systems, document their findings, and take the necessary corrective actions specified in the Coast Guard-approved plans when discrepancies are discovered. The Coast Guard will still conduct required inspections of the vessel(s); however, the manner of conducting the inspection will be considerably different.

3. How Compliance is Assured

SIP is not a self-inspection program. Under SIP, the Marine Inspector's primary focus is to review the implementation and management of the SIP by the company and check some critical vessel systems to verify accuracy of the records. SIP, properly implemented, ensures enrolled vessels are maintained in a continual state of regulatory compliance. This continual state of compliance is assured through the development of both the Company Action Plan (CAP) and Vessel Action Plan(s) (VAP). These plans must be approved by the OCMI. The company will develop these plans with the assistance of a Coast Guard SIP Advisor, assigned to work with the Company SIP Representative.

B. ENROLLMENT IN SIP INVOLVES A FOUR-PHASE PROCESS

1. Phase One: Application

The company sends a request, in writing, to their cognizant OCMI to be considered for SIP enrollment.

2. Phase Two: Plan Development

After a satisfactory review of the company (e.g., review of company records in Coast Guard files, interview of inspectors, etc.), the OCMI will assign a SIP Advisor to assist the Company SIP Representative in developing the CAP and VAP.

3. Phase Three: Operational Evaluation

Once the CAP and VAP are approved, a mutually agreed upon trial period will be conducted to operationally test the effectiveness of each plan to ensure continual compliance with the regulations.

4. Phase Four: Enrollment

At the end of the trial period, and at the request of the company, the Coast Guard SIP Advisor will conduct an initial Coast Guard SIP Inspection with representatives from both the Company and the Coast Guard Travelling Inspector Staff, Commandant (CG-5P-TI) to evaluate the program. If the inspection is successful, the OCMI will endorse the vessel's COI for enrollment in SIP.

C. FIRST STEP TOWARDS ENROLLING A VESSEL IN SIP

Regulations governing SIP are found in 46 CFR Part 8. Guidance and supporting documents including Inspection Criteria References (ICRs), SIP Forms, and sample CAPs and VAPs may be found on CG Homeport at http:\\homeport.uscg.mil. When a vessel owner decides to pursue enrollment in SIP, they must apply to the local Coast Guard OCMI. The OCMI will provide the vessel owner/operator with information on the application procedures. Policy questions should be addressed to the SIP Program Manager at the Office of Commercial Vessel Compliance, Commandant (CG-CVC-1); (202) 327-1224 or CG-CVC-1@uscg.mil. The guidance documents and example ICRs and forms should not be considered encompassing for all vessels that may be enrolled in SIP. This material is provided as examples and templates and should be modified as needed for each participating vessel. Vessel operators must create ICRs for all systems required to be inspected under applicable Federal Regulation including but not limited to the relevant sections of Titles 33, 46, and 49 CFR; and amplifying policy or regulations, such as IMO Conventions, NVICs, The Marine Safety Manual, and official Coast Guard Policy Letters. These ICRs should be reviewed periodically for currency and the affected Company and Vessel Action Plans revised as the underlying regulations or policy changes require.

D. GOALS AND BENEFITS

The primary goal of SIP is to have vessels operate in continual compliance with the regulations, rather than the cyclical peaking of vessel materiel condition associated with the traditional annual inspections. Benefits that have been realized by SIP companies in SIP include better management of vessel costs and an increased involvement and responsibility by vessel personnel for the safe operation of the vessel, and an increase in crew professional advancement.

CHAPTER 1: MARINE EQUIPMENT AND MATERIALS

A. INTRODUCTION

This and the following two chapters contain those provisions of Title 46 Code of Federal Regulations (CFR) that apply to the inspection of equipment and materials for use aboard inspected vessels and also to certain items of equipment carried on uninspected vessels. The controlling regulations are contained in 46 CFR Subchapter Q. The Commandant's approvals of equipment and materials are published in the *Federal Register* and in Equipment Lists, COMDTINST M16714.3A. Terminations of approval are also published in the *Federal Register*. *Federal Register* and in Equipment Lists, COMDTINST M16714.3A includes a separate section listing formerly approved instruments, machines, and equipment that may continue to be used as long as they are in "good and serviceable" condition, unless otherwise noted. The marine inspector is responsible for determining that equipment and materials are manufactured and installed in accordance with the Commandant's standards as required by regulation. This responsibility is imposed because the public has a reasonable expectation that equipment and materials approved by the Coast Guard will perform as intended in an emergency. Some statutes provide penalties for failure of lifesaving equipment to meet the Commandant's requirements (see 46 U.S.C. 3318(a) and (b)).

B. REPORTS OF UNSATISFACTORY EQUIPMENT

When a factory or shop inspection indicates that equipment or materials required to be Coast Guard-approved do not meet the applicable requirements, the situation must be reported to Commandant (CG-CVC) via the chain of command. If these conditions are serious, the Officer in Charge, Marine Inspection (OCMI) and district commander must take immediate steps to suspend approval, pending final action by the Commandant (see 46 CFR 2.75-40). Reports should be initiated when vessel inspections indicate problems associated with approved equipment and materials. Although a system exists to report equipment failures, relatively minor problems and those for which a report form is not appropriate may go unrecorded. In addition, the source of a problem may be a regulation or its interpretation. However, if several inspectors report similar experiences, further investigation by higher authority will be undertaken. The inspector is encouraged to discuss even minor types of problems with supervisors and other inspectors. Reports of unsatisfactory equipment or materials should clearly identify the problem, provide samples or pictures if possible, indicate impact, and offer recommendations for correction. This type of feedback is essential for regulations and inspection policies to remain effective.

C. "ACCEPTED" EQUIPMENT AND MATERIALS

1. Introduction

The following parts describe the requirements for approved equipment and materials. Certain equipment and materials not required by regulation to be approved may be "accepted" by the Commandant for use aboard inspected vessels, uninspected vessels, and boats after certain control actions have been taken (e.g., submittal of an affidavit by the manufacturer that applicable standards will be/have been met). Unlike approved equipment and materials, accepted items are not normally published in the *Federal Register*. However, they are listed in Equipment Lists and in the Proceedings of the Marine Safety Council.

2. Marine Engineering Equipment

Certain marine engineering equipment, e.g., valves, fittings, and flanges, may be accepted on an affidavit basis if certain regulatory requirements are met.

3. Welding Filler Metals

For hull construction, foreign and domestically manufactured filler metals must be tested by the American Bureau of Shipping (ABS) and listed in its publication, Approved Welding Electrodes, Wire-Flux, and Wire-Gas Combinations. In those cases where limited application may preclude such listing, acceptance by the Commandant will be based upon a satisfactory procedure qualification by the fabricator. For lifesaving equipment, specific acceptance of the welding procedure must be obtained from Commandant (CG-CVC). Under 46 CFR 57.03-1(e), type E6012, E6013, E6014, E6024, E7014, and E7024 electrodes may be used only when the welding procedure used for a specific electrode is qualified by the Marine Inspector, in accordance with the requirements of 46 CFR Part 57. These electrodes may not be used in the following instances:

a. On lifesaving equipment.

b. In ship's hull fabrication or repairs that involve butt welds in the shell, strength deck, tank top, strength bulkhead, or longitudinal strength member.

c. On galvanized materials, unless the welding procedures used for the specific electrode are qualified by the inspector in accordance with the procedures outlined in Section 30, Part III of the ABS Rules for Building and Classing Steel Vessels.

Generally, these electrodes may be used in horizontal and flat fillet weld attachments of hull stiffening members, provided that the welding procedures are qualified in accordance with Section 30, Part III, of the ABS Rules. The inspector may require such workmanship tests as deemed necessary to determine that satisfactory welds are being produced. The use of E7024 electrodes is contingent upon periodic weld testing to ensure that adequate weld quality is maintained. Acceptable welds with E7024 rods cannot be determined by a one-time test.

4. Electrical Equipment

Manufacturers of electrical equipment may obtain prior acceptance of the products through the Underwriters Laboratories, Inc. (UL) Marine Listing Service. A UL "Marine Listing" or "Marine Listing For Use On Vessels Over 65 Feet" indicates that, in addition to meeting UL standards, a product meets applicable requirements of 46 CFR Subchapter J (Electrical Engineering). This arrangement resulted from "Marine Supplements" to certain UL electrical standards, which contain specifications meeting the applicable requirements of 46 CFR Subchapter J. The equipment must be marked "Drip-proof," "Watertight," or "Suitable For Use In Corrosive Locations" if it is to be used in a location where the regulations require such enclosures. In such cases, the UL label will indicate the particular listing for the equipment. Electrical equipment without a UL "Marine Listing" may be accepted by the Marine Safety Center (MSC) on a case-by-case basis.

5. Ships' Stores and Supplies

46 CFR Subchapter N, specifically 46 CFR Part 147, details items of ships' stores and supplies that must be tested and certificated by the Coast Guard before they may be stowed or used aboard inspected vessels.

D. 46 CFR SUBCHAPTER Q SPECIFICATIONS

1. Introduction

During World War II, it was found that specifications for certain approved equipment and materials provided greater uniformity in their production by various manufacturers. Equipment that met neither the intent of the regulations nor the minimum standards was easily detected and eliminated from service. In 1945, the Commandant established the regulations in 46 CFR Parts 160-164 (Subchapter Q). Their purpose was to consolidate the specifications for equipment and materials that were required to be approved by the Commandant or to meet certain minimum standards. Also, requirements for the operation

and construction of inspected vessels were distinguished from specifications applicable to the manufacturers of approved equipment and materials used aboard vessels.

2. Application

Each item approved under 46 CFR Subchapter Q is assigned a basic approval number. This includes the number of the CFR subpart under which an item was approved, thus identifying the general requirements for its approval. No two specifications have the same number. 46 CFR Subchapter Q has been separated into six parts:

TYPE	CFR CITATION
Approval of Equipment and Materials (general)	46 CFR Part 159
Lifesaving Equipment	46 CFR Part 160
Electrical Equipment	46 CFR Part 161
Engineering Equipment	46 CFR Part 162
Construction	46 CFR Part 163
Materials	46 CFR Part 164

Each specification in 46 CFR Subchapter Q is complete, prescribing corollary specifications, materials permitted to be used, types and sizes of equipment, construction and workmanship requirements, markings and inspections required, and procedures for obtaining the Commandant's approval, if required. Although these specifications are intended primarily for the benefit of the manufacturer, the inspector also benefits from the consolidation of applicable requirements.

3. Certification of Approvals

Manufacturers of items considered satisfactory for the purpose(s) intended are issued an approval certificate by the Commandant. Notice of the approval and the item's approval number are published in the *Federal Register* and Equipment Lists. The approval number applies only to an item that is manufactured in accordance with approved plans, specifications, or other data submitted during the approval process. An item that is manufactured with changes in design, or with materials that are not previously approved by the Commandant, is not "approved" under the approval number listed for a particular item.

E. COMMERCIAL DIVING EQUIPMENT

1. Introduction

The objective of the Coast Guard's commercial diving regulations, in 46 CFR Part 197, is to set minimum safety standards for the diving industry. Compliance is verified by Marine Inspectors coincident with other inspection activities. Inspection of diving equipment and facilities must be conducted when diving operations occur on--

a. Vessels inspected for certification;

b. Deepwater ports; and

c. Structures and Mobile Offshore Drilling Units (MODUs) operating on the Outer Continental Shelf (OCS) of the United States.

Marine inspectors must be familiar with the requirements of 46 CFR Part 197. Volumes I and II of the U.S. Navy Diving Manual, Naval Ship Systems Command (NAVSHIPS) 0994-001-9010, contain useful information about diving equipment and operations.

2. Equivalent Equipment, Materials, and Procedures

Under 46 CFR 197.206, the Coast Guard may accept equivalent equipment, materials, and procedures for use in diving operations. Such acceptances must be approved by Commandant (CG-CVC), which may be reached at (202) 372-1224.

3. Pressure Vessels for Human Occupancy (PVHOs)

a. To operate in U.S. jurisdiction without violating the regulations, PVHOs used in commercial diving operations must have acceptable certification in one of the following ways:

(1) PVHOs certified and stamped in accordance with 46 CFR Subchapter F.

(2) PVHOs certified and stamped in accordance with the American Society of Mechanical Engineers (ASME) PVHO-1.

(3) PVHOs contracted for or constructed before 1 February 1979 that were submitted to the Coast Guard for approval prior to 1 February 1984. Design drawings and calculations must have been submitted no later than 31 May 1984. If not, see E.3 below.

(4) Any other PVHO without Coast Guard or ASME PVHO-1 certification and stamping must have plans and specifications approved by the Coast Guard as meeting ASME PVHO-1 and be tested to the satisfaction of the cognizant OCMI before it may operate.

b. Inspection and testing by OCMIs of PVHOs not already certified per Subparagraph E.3.a, above, should include, as a minimum, a thorough visual exam, pneumatic or hydrostatic test, operational check, and appropriate Nondestructive Testing (NDT) of the welded joints. NDT would not normally include radiography unless MSC review indicates it is necessary to satisfy code requirements or OCMI inspection reveals information indicating such testing was necessary. This information could include material condition, operational history and repair history (e.g., heavy corrosion, surface defects in welds, exposure to high temperatures, etc.).

c. Following satisfactory review by the MSC and testing to the satisfaction of the cognizant OCMI, a letter must be issued by the OCMI identifying the PVHO and its operating parameters. This letter must be available at the dive location.

d. Technical review criteria developed by Commandant (CG-ENG) is available at the MSC. Questions regarding this criteria should be referred to the MSC.

e. Other approved PVHOs and diving system pressure vessels that are permanently installed must be considered as part of the vessel and likewise be inspected under Subchapter F.

f. Approved PVHOs and all other diving system pressure vessels that are temporarily installed must be considered to be separate from the vessel, and inspected under 46 CFR 197.462 (except for compressed gas cylinders).

g. U.S-made compressed gas cylinders may be accepted for use in a diving system, provided that they comply with 46 CFR 197.338. Those of foreign manufacture may be used, provided that:

(1) U.S.-made, Department of Transportation (DOT)-approved cylinders are not readily available.

(2) They have been hydrostatically tested within the past 5 years.

(3) They have been hydrostatically tested within the past 5 years.

(4) The standards of their manufacture must be compared with 46 CFR 173.34 and 49 CFR Part 178 to verify equivalence before they are accepted. The OCMI's analysis of foreign standards must be forwarded to Commandant (CG-CVC) for review.

h. Permanently installed diving system piping must be inspected under Subchapter F; temporarily installed piping must be inspected under 46 CFR Part 197.

---

4. Dynamically- Positioned Vessels and "Liveboating"

a. Introduction. When the commercial diving regulations were written in 1978, dynamically-positioned (D-P) vessels were not addressed. At that time, little, if any, interest was expressed in their use in U.S. waters. More recently, D-P vessels have gained in popularity; they are expected to become more widely used in the future. A problem has arisen in the application of 46 CFR Part 197, in that the definition of "liveboating" could be strictly interpreted to include D-P vessels, due to their use underway (i.e., not anchored or moored). However, the Commandant recognizes the unique characteristics of D-P vessels and their overall superior performance in North Sea operations.

b. Application of diving requirements. For purposes of applying the requirements of 46 CFR Part 197, a D-P vessel must be considered to be any vessel that uses an automated station-keeping device to operate its propulsion systems, so as to keep the vessel in a relatively stationary location. The following must be applied in interpreting the regulations relative to D-P vessels:

(1) The D-P and its propulsion systems must be fully operational under all conditions likely to occur during the diving operation.

(2) The master of the vessel must be experienced and thoroughly familiar with the vessel's installations, as well as the nature of the underwater work being conducted.

(3) All diving activities must employ a diving bell in a moon-pool arrangement. The bell's umbilical must be held in constant tension to prevent fouling the vessel's screws. Divers' umbilicals from the bell must be of sufficient length that they cannot foul the vessel's screws.

(4) Surface diving activities must not be conducted from D-P vessels.

c. Application of 46 CFR 197.436 requirements. Only the following provisions of these regulations apply to D-P vessels engaged in diving activities:

(1) 46 CFR 197.436(a)(1) Vessel station-keeping abilities.

(2) 46 CFR 197.436(a)(4) Rescue boat availability.

(3) 46 CFR 197.436(c)(2)-(7) Diving supervisor's responsibilities.

F. MISCELLANEOUS INSPECTIONS OF EQUIPMENT AND MATERIALS

1. Introduction

Occasionally, Coast Guard Marine Inspectors are called upon to inspect boilers, pressure vessels, and other equipment and materials of Coast Guard units as well as those of Federal, state, and local agencies. For example, a hull inspector may be requested to assist in the survey of a Coast Guard small boat or a machinery inspector may be asked to investigate a boiler casualty aboard a government vessel. The Commandant desires inspection personnel to fulfill such requests as time and local resources permit. Records of such activities must be made on the forms supplied by requesting agencies or on forms produced locally. Reports must be made in accordance with policy.

2. Materials and Equipment Obtained for Coast Guard Use

a. General provisions

(1) Marine Inspectors will examine materials and equipment such as boilers, machinery, auxiliaries, related fittings, and other materials normally inspected for use in the marine industry.

(2) The inspector must interpret plans and specifications as fully as practicable; when questions or doubts arise, the matter must be referred to the OCMI, the district commander, or the Commandant, as appropriate.

b. The duties of the Marine Inspector are as follows:

(1) To become familiar with the contract and specifications for the material(s), and all related correspondence.

(2) To become acquainted with the flow of production and shipment so that progress of the work may be reported periodically.

(3) To assist the manufacturer in ensuring that Coast Guard requirements are met.

(4) To report any failure of the manufacturer to fulfill the requirements of the contract, purchase order, plans, specifications, or instructions for the work.

3. Definitions

a. Full Coast Guard inspection. This occurs when all materials purchased by a contractor are inspected and tested, in accordance with all requirements of the contract, work order, or other documentation. This type of inspection is rarely required, as it involves very close attention to the work and, probably, assignment of a full-time inspector.

b. Performance inspection. This type of inspection may require operation under "no load" conditions for a period required by the specifications, or demonstration of the load requirements.

NOTE: The work documentation must be explicit concerning such requirements.

c. Surface inspection. When this inspection is required, the material must be visually examined for appearances and imperfections and critical dimensions must be checked. No chemical analysis or physical tests need be conducted.

d. Shipping inspection. This requires materials to be packed, marked, and shipped in the proper quantities in accordance with the work documentation.

CHAPTER 2: INSPECTIONS OF VESSEL EQUIPMENT AND MATERIALS

A. GENERAL PRINCIPLES

1. Reasons for Coast Guard Control

All items of equipment installed on vessels subject to Coast Guard inspection and certification are subject to some degree of inspection and approval. Certain items are subject to inspection and approval even when they are carried aboard vessels not required to be inspected and certificated, such as fishing vessels and yachts. In judging the quality and suitability of equipment used on vessels, the primary considerations are as follows:

a. Safety of the vessel. To safeguard the vessel, equipment must be of good quality and suitable for its intended use. In judging suitability, the Marine Inspector must consider potential hazards of fire, explosion, failure of watertight integrity, and the risks involved if the equipment fails to function.

b. Safety of personnel. The vessel's equipment must provide the maximum practicable safety for passengers and crew. For example, cargo pumps and piping used in carrying dangerous liquids or gases must be designed, constructed, and maintained to transfer cargoes efficiently and safely.

c. Performance of a safety function. Many items, such as lifesaving equipment and firefighting equipment, are carried solely to perform a safety function. They are not used on a daily basis, but they must perform immediately and effectively in an emergency. It is essential that such items are of good quality, suitable for the intended use, maintained in good condition, and readily accessible.

2. What the Coast Guard Controls

a. Design. Various statutes and regulations provide for control of the design of equipment to be used aboard vessels. The degree of control exerted by the Coast Guard depends upon the potential hazards involved and is discussed in the inspection regulations. In approving a particular design, Marine Inspectors must consider the safety of the vessel and its personnel and the ability of the equipment to perform its intended function in the event of emergency.

b. Construction. The degree of control the Coast Guard exerts is specified in the applicable regulations. Depending on the hazards involved, such control might extend to specification of materials, methods of welding or riveting, and inspections and tests during and after construction.

c. Installation. Although certain qualities of equipment installation are controlled through construction and plan approval, the primary responsibility for ensuring the suitability of an installation rests with the inspector.

(1) Regardless of the general requirements of the regulations or specific approvals of plans and specifications, the inspector must determine at the initial inspection (during or following installation) that the installed equipment is safe and will perform as intended.

(2) Careful consideration is essential at this point, because approved installations normally should not be subjected to different requirements at later inspections. In considering the suitability of an installation, the inspector must consider security against movement, safeguards to personnel, and location with respect to other items on the vessel.

---

3. How the Coast Guard Controls

a. Standards. The standards for the design, construction, and installation of equipment on vessels may be specified in the regulations or contained in other recognized, published standards. When no specific standard is given, the Officer in Charge, Marine Inspection (OCMI) must determine if this equipment is suitable for its intended use.

b. Plan approvals. The Commandant may require plans for equipment of new, unusual, or potentially hazardous design.

c. Type approvals. Various regulations require equipment to be of types approved by the Commandant. When type approval is required, the Coast Guard establishes specifications or standards that must be met. Manufacturers must show that their products meet these standards before type approval is given.

d. Tests and inspections. Various regulations require certain tests and inspections of vessel equipment to determine its suitability. Depending on the hazards involved, tests and inspections may be conducted throughout the manufacturing process, during the installation, or both. These tests and inspections are intended to determine whether the equipment meets applicable standards, is safe for the vessel and personnel involved, and whether it will serve its function.

B. RESPONSIBLE PARTIES

1. Manufacturers

Manufacturers of marine equipment have a basic responsibility to supply equipment that is satisfactory for its intended use and in compliance with applicable standards. Regulations contain specific requirements for manufacturers to follow in certain cases, but, for many items, only good commercial quality is required.

2. Vessel Owners

Owners are expected to supply and maintain the equipment aboard their vessels in accordance with applicable regulations. When the regulations do not specify requirements for vessel equipment, the vessel owner must supply equipment that is safe and suitable for its intended use. Equipment without regulatory specifications must be installed under the cognizance of the OCMI. The vessel owner is responsible for the equipment’s continued maintenance.

3. Vessel Personnel

The vessel's officers and crew must maintain equipment in a satisfactory condition, ready to perform its intended function.

4. Classification Societies

Classification societies perform some equipment manufacture oversight and some survey responsibility for ensuring proper equipment.

5. Coast Guard Technical Personnel

Commandant (CG-CVC, CG-ENG, and the Marine Safety Center (MSC)) review plans and specifications for compliance with the regulations and suitability with the intended use of equipment.

6. Coast Guard Inspection Personnel

Marine Inspectors have the final responsibility for determining whether a piece of equipment complies with requirements and is suitable for its intended use.

C. CATEGORIES OF ACCEPTABLE EQUIPMENT

1. Equipment Manufactured Under Coast Guard Control

Certain items of equipment are required to be manufactured under Coast Guard control. This control requires the submittal and approval of plans, materials, and methods of construction as well as tests and inspections by the Coast Guard during and after both manufacture and installation.

2. Approved Equipment

a. General approvals. Various items of lifesaving, firefighting, pollution prevention, and miscellaneous equipment used aboard inspected and uninspected vessels are required by statutes and regulations to be of types that are approved by the Commandant.

(1) To be an approved type, equipment must be manufactured in accordance with standards published in 46 CFR Subchapter Q (Specifications). To this end, the manufacturer must submit plans and specifications to the Commandant. After approval, the product must be labeled so that it can be identified as approved equipment.

(2) Alternatively, when specifically permitted by regulation, equipment must comply with the standards of a Commandant-recognized classification society, such as the American Bureau of Shipping (ABS). Equipment that is approved by a classification society without plan review by the Coast Guard must likewise be labeled to indicate compliance with required standards and approval.

b. Certification. Types of equipment that are considered to conform to 46 CFR Subchapter Q specifications are formally listed in the *Federal Register*.

(1) A certificate of approval is issued to the manufacturer of the equipment by Commandant (CG-CVC).

(2) Type-approved equipment that meets the specifications in Subchapter Q is listed in Equipment Lists, COMDTINST M16714.3 (series) and MISLE.

3. Equipment Acceptable Under Affidavit

a. The requirements that manufacturers must meet to have their products accepted on an affidavit basis and listed in Equipment Lists/MISLE are detailed in 46 CFR 50.25. Such items include certain valves, fittings, and flanges.

(1) Manufacturers of affidavit products that are not included in Equipment Lists may provide valves, fittings, and flanges for acceptance on an individual vessel basis.

(2) Other items, such as piping, tubing, standard pipe-joining fittings, bolting, castings, forgings, plates, and bar stock may be accepted on the basis of a manufacturer's or mill certificate. Such certificates contain the applicable standard society's specifications.

(3) 46 CFR Table 50.25-1(a) is an aid to the inspector in determining what is required of the manufacturer.

b. Verification of markings. A manufacturer typically makes some products that comply with the regulations and some that do not, simply because the marine market is generally a small percentage of its business.

(1) The manufacturer is required only to make one valve, fitting, or flange that complies with material requirements to receive an affidavit for the equipment and be listed in Equipment Lists/MISLE. Therefore, it should not be assumed that because a manufacturer is affidavited that its product is satisfactory.

(2) Products of affidavited manufacturers should be reviewed to determine acceptability in the same manner that products of non-affidavited manufacturers are reviewed.

(3) The Marine Inspector should check the markings on a component when installed to verify that it is of the required type, as indicated on the approved plans. In cases of discrepancies, the inspector must contact the MSC for guidance.

4. Equipment Acceptable After Type Tests

Equipment of a given design may be given general acceptance for use on inspected vessels after it has proven satisfactory by type tests. Coast Guard approval of plans and specifications may also be required prior to type tests. Under 46 CFR 58.30-15(f), hydraulic system components fabricated from certain ferrous or aluminum alloys which exhibit a low ductility must be impact-shock tested by an independent laboratory acceptable to the Commandant. Hydraulic components that have proven satisfactory by impact-shock tests are listed in Equipment Lists/MISLE. Inquiries as to whether a particular testing laboratory may conduct the required tests should be addressed to Commandant (CG-ENG).

---

5. Equipment Types Acceptable Upon Plan Approval

Equipment of a given design may receive approval for use on inspected vessels after Commandant (MSC) has examined all plans and specifications and determined that the equipment will meet applicable requirements. Approvals are limited to the installation(s) for which plans were submitted. Previously approved plans may be used in subsequent installations by following the requirements in 46 CFR 50.20-15. Type approvals are issued only under 46 CFR Subchapter Q (under 46 CFR Table 50.25(a) for hydraulic system components that require testing).

---

6. Portable Equipment

Portable electric equipment may be accepted in several ways. Portable cargo lights are covered under the Underwriters Laboratories, Inc. (UL) "Standards for Marine-Type Electric Lighting Fixtures." These lights are labeled to indicate UL approval as "marine types," portable items covered by this category are considered satisfactory. Portable items not labeled by UL must be checked to ensure compliance with 46 CFR Subchapter J. Portable fixtures should be referred to the MSC for determination. Approval of portable lighting devices by inspectors is not advisable, as temperature test data are needed to evaluate these fixtures properly. Portable tools can be accepted if the design appears to be commercially sound. This can be verified by a UL listing under the classification "Tools - Commercial Type."

---

7. Individual Items Accepted Under Society Standards

Individual items of equipment are acceptable for use on inspected vessels when they meet the standards of a classification society specified by the applicable regulations. For example, 46 CFR 58.01-5 provides for the acceptance of main and auxiliary machinery that meets the standards established by ABS. Lighting fixtures listed under the UL "Standard for

Marine-Type Electric Lighting Fixtures" are accepted for use on inspected vessels (see 46 CFR 111.75-20). Other electrical equipment, such as junction boxes and switches, with a UL Marine Listing or Marine Listing for Vessels Over 65 Feet are also acceptable for use on inspected vessels, provided they have the necessary rating and their enclosures are appropriate for the location in which they will be installed.

---

8. Equipment Required to Meet Installation Standards

Throughout the regulations, there are requirements covering the safe installation of equipment. In many cases, specific inspections and tests are required during or after installation.

---

9. Permitted Articles of a Dangerous Nature

Articles of a dangerous nature for ships' stores and supplies are prohibited by 46 CFR Subchapter N (Dangerous Cargoes), unless specifically permitted aboard. Certificates are issued to manufacturers of permitted articles that comply with these requirements.

---

10. Equipment for Which Standards are Not Specified

Items of equipment for which specific standards are not specified by law or regulation are required to meet an acceptable standard of safety, and must be suitable for the purpose intended.

Normally, such items that meet the standards of a recognized code or "good marine practice" will be considered suitable by the Commandant.

---

11. Equivalent Equipment

Throughout the regulations, there is authority for the Commandant, district commander, or OCMI to accept substitute equivalent equipment or materials, and alternate materials or methods of construction. For example, an equivalence has been filed with the International Maritime Organization (IMO) for substitution of life rafts for lifeboats on vessels under 1,600 Gross Tons (GT) making international voyages under certain conditions. The text of the equivalence notice is as follows: "Regulation 31 of Chapter III of the International Convention for the Safety of Life at Sea (SOLAS) provides that every cargo ship, with certain exceptions, must carry lifeboats on each side of the ship of such aggregate capacity as will accommodate all persons on board and, in addition, must carry life rafts sufficient to accommodate half that number. The Government of the United States of America gives

notification of acceptance of the following equivalent arrangement under the provisions of Regulation 5, Chapter I of the convention: Cargo vessels of 500 GT and over but less than 1600 GT, except tankers, may be equipped as follows:

a. On each side of the vessel, one or more davit-launched inflatable life rafts of sufficient capacity to accommodate the total number of persons aboard.

b. A minimum of one launching device on each side of the vessel. Operation of the raft launching device must not require anyone to remain aboard.

c. Sufficient float-free inflatable life rafts with capacity to accommodate not less than one half of the total persons allowed on board.

d. On a vessel for which persons aboard will have an escape route not requiring them to board inflatable life rafts by first entering the water nor to descend to them a distance in excess of 4-1/2 meters, float-free inflatable life rafts of sufficient capacity on each side of the vessel to accommodate the total number of persons aboard may be substituted for the davit-launched rafts and launching equipment required by a and b above.

e. A motor-propelled rescue boat suitable for ocean service with a davit or other suitable launching device capable of launch by no more than three persons.

f. In accordance with current regulations, only the Commandant can approve such an equivalent arrangement. Requests for such substitutions must be forwarded to Commandant (CG-CVC).

D. REFERENCES

1. SOLAS 74, ILLC 66, and MARPOL

Safety of Life at Sea (SOLAS) 74 contains specific requirements for the equipment used on vessels making international voyages; these requirements are also in the regulations. The International Load Line Convention of 1966 (ILLC) contains provisions affecting equipment used on inspected vessels. MARPOL requires equipment to be approved.

2. Regulations

a. 33 CFR Parts 151-159 (Subchapter O) contains requirements for oil and hazardous substance equipment such as oil-water separators, oil content monitors and alarms, as well as Marine Sanitation Devices (MSDs).

b. 33 CFR Parts 173-183 (Subchapter S) contains safe powering and equipment requirements for recreational boats and boats carrying six passengers or fewer.

c. 46 CFR 2.75 and Part 159 contain requirements and procedures for equipment type approvals, filing of affidavits by equipment manufacturers, and requirements covering the acceptance of portable fire extinguishers.

d. 46 CFR 2.95-10 contains information and requirements concerning retention of records of approved equipment by manufacturers.

e. 46 CFR Parts 160-164 (Subchapter Q) contains specifications for equipment that is given type approval.

NOTE: Equipment that is not mentioned in these regulations must be acceptable to the Coast Guard.

---

3. **Equipment Lists, COMDTINST M16714.3A**

Equipment Lists, COMDTINST M16714.3 (series) contains listings of various lifesaving, firefighting, pollution abatement, engineering, electrical, and miscellaneous equipment used on vessels. These items are approved or accepted by the Commandant, as required by certain laws and regulations. Changes to this publication are issued in the *Federal Register* and reprinted in the Proceedings of the MSC. It contains four sections and addresses--

a. Approved instruments, machines, and equipment;

b. Manufacturers who have submitted affidavits for valves, fittings, and flanges;

c. Acceptable hydraulic components; and

d. Formerly approved instruments, machines, and equipment that are no longer manufactured as approved equipment. Unless otherwise noted, such items may be used as long as they are in good and serviceable condition.

---

4. Industry Standards

Federal regulations incorporate industry standards for various marine engineering equipment. Incorporation of industry standards reduced the need for detailed regulations. In some cases, regulations concerning the design, construction and testing of equipment have been removed. Manufacturers may continue to build and mark approved products affected by the regulations until their Certificate of Approval expires.

E. MARINE ENGINEERING EQUIPMENT

1. Unfired Pressure Vessels

a. Construction standards. Pressure vessels must be designed, constructed, and tested in accordance with the requirements of 46 CFR Part 54, which modifies the rules of Section VIII (Pressure Vessels) of the American Society of Mechanical Engineers (ASME) Code. All pressure vessels intended for ships' service, such as compressed air tanks, heat exchangers, and refrigeration equipment are covered by these rules. (Refer to MSM Volume IV for details.)

NOTE: See MSM Volume II, Material Inspection, COMDTINST M16000.7A (series), Sec. A, Ch. 4 for further information on plan submittal.

b. Hydraulic accumulators. These components are inspected, stamped, and approved in a manner similar to pressure vessels, including the use of Manufacturers Data Report Boilers Pressure Vessels or Nuclear Pressure Vessels, Form CG-2936, the Manufacturer's Data Report for Boilers, Pressure Vessels, or Nuclear Pressure Vessels.

(1) Regulations dealing with the peculiarities of these accumulators are established in 46 CFR 58.30-25. Regulations regarding the general design, fabrication, inspection, testing, and stamping requirements for hydraulic accumulators are contained in 46 CFR Part 54.

(2) Accumulators must meet the applicable requirements of 46 CFR 54.01-5(c) (3), (c) (4), and (d), or the remaining requirements in 46 CFR Part 54.

(3) Existing installations that do not have Coast Guard stamped accumulators must be referred to Commandant (CG-ENG-3).

(4) To avoid damaging the internal parts of the inspection of accumulators, as required by 46 CFR 61.10- 5, must be limited to an operating test.

c. TAO 187 class vessels. The ram tensioners on the Fueling at Sea (FAS) and Replenishment at Sea (RAS) stations on the TAO 187 class vessels have been determined to be hydraulic accumulators. Periodic testing must be conducted as noted in Paragraph b above.

(1) The air receivers serving the ram tensioners for the FAS and RAS stations should be built in accordance with 46 CFR 54.01-5(c)(3) and properly marked and stamped in accordance with 46 CFR 54.10.

(2) If an inspector finds that these air receivers are not properly marked and stamped, the vessel owner must provide satisfactory evidence to the OCMI that the air receivers on board were built in accordance with 46 CFR Part 54.

(3) The air receivers may be examined internally in accordance with 46 CFR 61.10-5(e) (4). Use of a borescope, ultrasonic thickness testing or acoustic emission testing may be used to satisfy the internal and external inspection requirements of 46 CFR 61.10-5(b).

d. Compressed air cylinders/pressure vessels in totally enclosed lifeboats. Two types of cylinders/pressure vessels are approved for use in totally enclosed lifeboats on offshore platforms, Mobile Offshore Drilling Units (MODUs), and other vessels. These compressed air systems provide combustion air for the engine and breathing air for the crew when operating in a closed condition.

(1) One type of pressure vessel is approved by the Coast Guard under 46 CFR Subchapter F and the other type is approved under the Materials Transportation Bureau's (MTBs) regulations, 49 CFR Parts 173 and 178 Subpart C, which were formerly promulgated by the Interstate Commerce Commission (ICC). The type of device can be determined by its markings.

(2) Coast Guard-approved pressure vessels should be periodically inspected and tested as required by 46 CFR 61.10. MTB/ICC cylinders should be periodically inspected and tested as required by 49 CFR 173.34(e). (Refer to NVIC 3-95).

---

2. Welding Equipment

a. Electric welding equipment. There are no specific prohibitions of the installation of electric welding machines on vessels, including passenger, tank, and cargo vessels. However, 46 CFR 35.01-1, 50.05-10, 71.55-1, and 91.45-1(a) require the approval of the OCMI before repairs are undertaken with such systems. Installation of electric welding machines should be discouraged on tank vessels. When welding machines are permitted, adequate instructions for their safe use must be posted aboard the

vessel. These instructions should call attention to the Coast Guard regulations concerning repairs to vessels and their equipment.

b. Oxyacetylene welding equipment. Specific permission from the OCMI is not required for a vessel to carry such equipment. If such permission is granted, the oxyacetylene welding equipment must be stored in accordance with and in quantities not exceeding those allowed by 46 CFR 147.05-100.

(1) Suitable safety instructions on the use of this equipment must be posted on the vessel.

(2) Hard pipe oxygen and acetylene distribution systems are not authorized.

---

3. Pipe Fittings

a. Cargo hose couplings. Oil transfer hoses carried aboard vessels are subject to the requirements of 33 CFR 154.500.

(1) Each hose assembly must have fully threaded connections; flanged connections that meet the American National Standards Institute (ANSI) Standard B16.5 or B16.24; or quick disconnect couplings designed, constructed, and tested in accordance with American Society of Testing and Materials Standard (ASTM) F-1122.

(2) Quick disconnect hose couplings are divided into Standard Class and Class I. Vessels carrying hazardous material in bulk are required to use Class I quick disconnect couplings.

(3) Class I quick disconnect couplings and hose assemblies are subject to the requirements of 33 CFR 153.940.

(4) Quick disconnect couplings must be marked with the ASTM specification number and "CL I" if they are Class I adapters or couplers.

(5) The Coast Guard no longer maintains a list of quick disconnect couplings accepted under 33 CFR 154.500 and 153.940.

b. Aluminum flanges. Aluminum flanges were previously approved under 33 CFR 154.500 by reference to ANSI B16.31. This reference was removed from the regulations when ANSI dropped the standard for revision. In the interim, aluminum flanges manufactured and stamped under the old ANSI B16.31 standard are approved for oil transfer service as long as they remain in good condition and comply with the

testing requirements of 33 CFR 156.170. For new flanges not stamped ANSI B16.31, it is the operator's responsibility to provide documentation from the manufacturer that it is equivalent to the old standard.

c. Nickel flanges. Nickel alloy flanges (stainless steel), once part of the old ANSI B16.31 standard, were moved to ANSI B16.5.

d. Inspection of flexible hose assemblies. Nonmetallic flexible hoses must be designed, constructed and tested in accordance with Society of Automotive Engineers (SAE) J-1942. This standard refers to SAE 1475 for fitting standards.

(1) Hoses that meet the requirements of 46 CFR 56.60-25(c) are approved as long as they remain in good condition.

(2) These hoses have exterior coverings that, when damaged, could allow moisture to enter the inner tube material and wire braid, causing rapid corrosion and failure of the hose. When replacement is necessary, they should be replaced with hoses meeting SAE J-1942 standards.

(3) Use of flexible hoses. The use of the flexible hoses is restricted to vital and non-vital fresh and salt water systems, non-vital pneumatic systems, lube oil, fuel systems, and fluid power systems.

(a) To ensure the reliability of these systems, a thorough examination of these hoses must be made at the regular inspection period.

(b) Minor breaks, cuts, or abrasions in the covering may be allowed. However, the hose must be replaced if corrosion of the interior material is found.

(4) Markings. The list of approved hoses should be checked to determine the acceptability of a specific hose.

(5) The Coast Guard is negotiating for SAE to assume responsibility for maintaining an up-to-date list.

(a) Hoses and hose assemblies meeting SAE-J1942 must be marked with the maximum operating pressure, manufacturer’s name and part number, and hose size.

(b) Hoses may be marked in accordance with SAE J-517 standards. SAE J-517 is the basic standard for hydraulic hoses. The markings must include the following:

e. SAE hose specification number (including type designation where applicable).

f. Maximum operating pressure.

g. Manufacturer's name, part number.

h. Hose size.

i. To expedite inspections, hoses may also be marked with the propeller symbol followed by the appropriate alphanumeric code. An example is "SAE J-517, ABC Co. P/N A35, 100R2AT-8 FEB 89 HF." This example describes a hose that is 1/2 in. I.D., 2-Wire, Type AT, 3500psi hydraulic service rating, acceptable for All Services applications."

j. Identifying the recommended service is optional. However, hoses may be marked with the following codes from SAE-J1942:

HF	All Services
H	Fluid Power
F	Lube Oil and Fuel Oil Systems
VW	Vital and Nonvital Fresh and Salt Water
NVW	Nonvital Water and Pneumatic

k. Identifying hoses as acceptable for the intended service may be complicated, especially since use of the service code is optional. For instance, hoses marked HF may have different pressure ratings for different services. Often, only the highest pressure rating is marked on the hose.

l. Also, hoses marked as complying with SAE J-517 may not have undergone the fire test required by SAE J-1942 and are not acceptable for fuel/lube oil service. The suitability and pressure rating for the intended service should always be verified with the manufacturer.

m. Flexible pipe couplings. The regulations in 46 CFR 56.30-35 and Part 40 describe the limitations and installation requirements for the various types of flexible pipe couplings.

(1) Flexible couplings should be equipped with positive restraints to limit angular deflection and to keep the pipe from "creeping."

(2) Couplings should not be used as a vibration dampener or as a way to correct excessive misalignment.

(3) Pipe brackets and supports should be included in the inspection of flexible couplings and their restraining devices.

(4) Damaged or deteriorated gaskets must not be reinstalled. Indications of excessive or premature wear must be further investigated and steps taken to correct the cause before placing the joint back in service. The OCMI must be satisfied that new and existing flexible pipe couplings are suitable for the service intended.

---

4. Spark and Flame Arresters

a. Spark arresters in exhaust lines. Requirements for spark arresters in gasoline and diesel engines are contained in 46 CFR 58.10-5 and 58.10-10. The Coast Guard does not have a specification for such spark arresters. They must be accepted after installation and a demonstration that the spark arrester will prevent the emission of glowing embers.

b. Flame arresters for gasoline engines. Manufacturers must comply with the requirements contained in SAE 1928 for backfire flame arresters and engine and fuel air induction systems or UL 1111 for backfire flame arresters.

(1) Engine air induction systems. 46 CFR 58.10-5(b)(3)(iii) has been revised to allow a manufacturer to incorporate an engine air induction system without formal approval and labeling if it meets the flame dispersal, construction, and installation criteria contained therein. The difference between this type of system and a system that is required to meet an adopted standard is that the flame is dispersed outside the vessel.

(2) Two-cycle engines with reed valve assembly. Two-cycle engines using a reed valve assembly do not require backfire flame arresters. Reed valves inherently protect against backfire. They are not subject to Coast Guard approval. Owners must provide satisfactory evidence of reed valve installations, such as a manufacturer's certificate or a proper maintenance manual.

(3) Markings. Permanent markings attesting to compliance with either standard must be clearly evident. The marking must include the following:

(a) Manufacturer's name or trademark.

(b) Identification by style, type or model number.

(c) The word "MARINE".

(d) The marking for engine and fuel air induction system will probably be located on the carburetor cover.

c. Tank vent flame arresters. Tank vent flame arresters must be designed, constructed, and tested in accordance with ASTM F-1273. Arresters are classed either Type I (end of line) or Type II (in line). The markings must include the following:

(1) Manufacturer's name or trademark.

(2) Style, type, model or other manufacturer's designation.

(3) Size of the inlet or outlet.

(4) Type of device.

(5) Direction of flow.

(6) Test laboratory and report number.

(7) Lowest Maximum Experimental Safe Gap (MESG).

(8) Ambient air temperature range.

(9) ASTM designation F-1273.

---

5. Equipment Using Liquefied Petroleum Gas (LPG) or Compressed Natural Gas (CNG)

A regulation change may permit the use of LPG and CNG for cooking appliances aboard all uninspected vessels, provided American Boat and Yacht Council (ABYC) Standards A-1-78 or A-22-78 and pertinent National Fire Protection Act (NFPA) standards (for CNG) are met, in addition to other requirements of the proposed regulations.

---

6. Keel Coolers

Most keel coolers are integral parts of the hull (generally, extra-heavy pipe halves or structural angles welded to the bottom of the vessel). Independent units known as grid coolers have also been utilized.

Keel coolers must be fitted with shut-off valves located at the skin of the vessel, as required by 46 CFR 56.50-96(a), with the exception that a shut-off valve may be omitted if the requirements of 46 CFR 56.50-96 (a) (1) and (2) are met.

---

7. Sliding Watertight Doors

a. Sliding watertight doors must be designed, constructed and tested in accordance with ASTM F-1196. The requirements for controls and operating mechanisms associated with the watertight doors are contained in ASTM F-1197. ASTM F-1196 and F-1197 apply only to Class 2 and Class 3 sliding watertight doors. The watertight door must pass the following installation tests described in the standard:

(1) Visual inspection of the sealing surface for surface defects.

(2) Feeler gauge test - a test of the tightness of the door closure using a 0.003 inch feeler gauge.

(3) Hose test - water at a hose pressure of 50 psi at a distance of not more than 5 feet from the door.

(4) Closure test - Using a maximum force of 25 pounds (50 pounds during wedging, if applicable).

(a) A watertight door must close in not less than 20 seconds or more than 40 seconds in power operation mode.

(b) All watertight doors must close in less than 90 seconds in the manual operation mode.

(c) All power operated doors must be closed in less than 60 seconds after activation of the master mode switch.

b. The watertight door must have a nameplate permanently attached to the door, on which is stamped the name of the manufacturer, manufacturer's serial number, ASTM specification designation (ASTM 1196), pressure head, and date. The nameplate must also include the following phrase: “Suitable for installation in subdivision bulkheads aboard vessels inspected and certified by the U.S. Coast Guard.”

c. Watertight doors installed in these locations which do not meet the minimum ASTM standard for a 20 foot design head will be approved by Commandant (CG-522) on a case-by-case basis.

8. Spill Valves

Spill valves must be designed, constructed, and tested in accordance with ASTM F-1271 – 90(2006). ASTM F-1271 prohibits positive closure of spill valves as a means to prevent the opening of spill valves due to sloshing. For new valves, the old practice of dogging the valves closed while en route is no longer acceptable. Since 46 CFR 39.20-9(c) requires a means to prevent spillage due to sloshing, an alternative means must be provided. Valves which are presently installed are still acceptable and dogging is still permitted for these valves. However, new ones meeting the ASTM standard are to be installed when replacement is required. The provisions of both the ASTM standard and this regulation may be satisfied by either valve design or design of the valve installation (i.e. tank baffling or stilling well not part of the valve assembly).

a. During the installation of vapor recovery systems, spill valves must be replaced with new ones meeting the ASTM standard. Spill valves are often the limiting factor for a vessel's maximum allowable transfer rate.

b. Markings. The spill valve markings must include the following:

(1) Manufacturer's name or trademark.

(2) Style, type, model or other manufacturer's designation.

(3) Direction of flow.

(4) Maximum rated flow.

(5) ASTM designation F1271.

(6) Relief pressure setting at full flow rating.

(7) Set (opening) pressure.

(8) Indication of the proper orientation of the valve, if critical.

F. MISCELLANEOUS DECK EQUIPMENT

1. Air Breathing Apparatus

a. Introduction. Title 46, CFR, Subchapters D, H, I, I-A, R, and U require Self-Contained Breathing Apparatus (SCBA) as required equipment on certain vessels. These SCBA must be of the pressure-demand, open-circuit type, approved by the Mine Safety and Health Administration and by the National Institute for Occupational Safety and Health. They must have a full facepiece and an air supply of at least 30 minutes. SCBA not meeting these criteria may be allowed to remain on board, depending on the grandfather clause in the applicable subchapter. Replacements for grandfathered SCBA must be as described above.

b. Fresh air breathing apparatus. Such appliances approved under 46 CFR 160.011 were required equipment on most tankships. They may continue in use until November 23, 1994, if they were part of the vessel's equipment on November 23, 1992, and as long as they are maintained in good condition to the satisfaction of the OCMI. An examination of such appliances should include the following items:

(1) Is the facepiece cracked or is the faceplate lens badly scratched? Is there a loss of flexibility? Is the faceplate lens incorrectly mounted?

(2) Are there breaks in the head straps? Is there a loss of head strap elasticity? Do the head straps have broken or malfunctioning buckles? Do the head straps have excessively worn serrations that may permit slippage?

(3) Are there breathing tubes broken or missing? Do the breathing tubes have loose connectors? Are there missing or loose hose clamps? Is there deterioration? (The inspector should stretch the tubes and look for cracks.)

(4) Are the crank bellows hose connections tight? Is there a crank available? Is operation successful?

(5) The inspector should examine the entire length of the air hose for pliability and signs of deterioration, cuts, or cracks. The inspector should also examine connectors.

(6) Although vessel requirements specify 45.72 meters (150 ft) maximum lengths, fresh air lines of up to 91.44 meters (300 ft) have proven satisfactory in tests.

(7) Fresh air breathing appliances that become unserviceable must be replaced by SCBA described in 46 CFR 35.30-20(c) (1).

c. SCBA. An examination of such appliances should include the following items:

EXAMINING A SELF-CONTAINED BREATHING APPARATUS (SCBA)
CYLINDERS
• Is the cylinder fully charged? • Has the cylinder been hydrostatically tested within the prescribed interval? • Does the cylinder show visible signs of corrosion or damage? • Are they properly stowed?
HOSES
• Do they show signs of deterioration? • Are they properly connected?
FACE MASK
• Is the faceplate cracked/badly scratched? • Is there loss of flexibility? • Cracking at edges of seal? • Incorrectly mounted lens?
HEAD STRAPS
• Are there breaks? • Loss of elasticity? • Broken or malfunctioning buckles? • Excessive wear of head harness serrations that might permit slippage?

2. Reflectorized Signs

Prior approval is not required for the use of "Scotchlite" signs on merchant vessels. The Commandant has no objection to the use of reflectorized signs to mark emergency equipment, instructions, and escape routes. However, such signs must comply with the intent and specifics of the applicable regulations governing required markings. The use of reflectorized signs is subject to any special limitations that may be imposed by the OCMI within whose jurisdiction the vessel is inspected.

G. ELECTRICAL EQUIPMENT

1. Cartridge Fuses

On 4 December 1959, 46 CFR 111.53 was amended to require cartridge fuses, if used, to be of a nonrenewable type; however, this requirement is not retroactive. Thus, inspectors must encourage the use of nonrenewable cartridge fuses in all cases. Replacement of renewable link cartridges is only required for those vessels contracted on or after 4 December 1959.

2. Marine-Type Lighting Fixtures

The Commandant will accept marine-type light fixtures listed by UL for installation on inspected vessels. However, the Commandant may reject any fixture not considered suitable for a specific application. Submittal of drawings to the Coast Guard for approval is not required for fixtures listed and labeled by UL. However, just because a particular lighting fixture has a UL marine label does not mean that it may be installed anywhere aboard an inspected vessel. For example, in hazardous locations, the fixture must be of suitable explosion proof construction, and must be so labeled. UL listings are divided into three classes, as follows:

a. "Outside," used where the fixture will be exposed to the weather or sea conditions.

b. "Inside-drip-proof," installed in other wet or damp locations.

c. "Inside." Where the regulations permit only incombustible materials in passageways and stairway enclosures, materials such as metal and glass must be used in fixture housings. Cables used to connect UL marine-type lighting fixtures must have UL listed insulation, to ensure that they are suitable for the operating temperatures of the fixtures.

3. Television and/or Radio Antennas and Radar Installations

The Coast Guard does not regulate installation of television and radio antennas on vessels. Federal Communications Commission (FCC) inspectors may require changes in an antenna installation if it will likely interfere with the proper operation of the vessel's main radio transmitter or receiver. Television antenna installations on inspected vessels are considered to be under the cognizance of the master or a competent crewmember designated by the master (likewise, the FCC has jurisdiction over marine radar installations). Coast Guard inspections are normally limited to spot-checking for unsafe conditions and overall safety.

H. LIFESAVING EQUIPMENT

1. General Requirements

a. Equipment approvals. The navigation and vessel inspection laws require life preservers, exposure suits, ring buoys, lifeboats, life rafts, and certain other types of lifesaving equipment to be approved by the Commandant. This approval must be granted before the equipment is placed aboard the vessel to fulfill requirements for lifesaving equipment. Tests and inspections of lifesaving equipment at the inspection for certification are prescribed in the various regulations. This section and NVIC 2-63, "Guide for the Inspection and Repair of Lifesaving Equipment," should be used as further guides.

b. Alterations of approved equipment. In every case when lifesaving equipment or appliances directly connected with them, they cannot be manufactured to the approved design or specification; substitutions must not be made until they have been first accepted by Commandant (CG-CVC).

c. Penalties. It has become evident that certain lifesaving equipment has been manufactured and sold under approved labels despite its failure to conform to the material specifications or design, or both, as originally approved by the Coast Guard.

(1) In the past, such equipment failed to function properly in an emergency or was found to be deficient under service conditions. Such practices will not be tolerated. Those found by a Marine Inspector must be brought to the attention of the OCMI and district commander immediately. Steps will be taken to suspend the approval, as provided by 46 CFR 2.75-40 and 2.75-50, or to invoke the various penalties and sanctions provided, including prosecution under 46 U.S.C. 3318(b).

(2) Under 14 U.S.C. 639, manufacturers may be prosecuted for advertising items that have never received Coast Guard approval as having done so.

d. Lifesaving installations and plans for boat deck approvals. These are discussed in the MSM Volume IV, Technical, COMDTINST M16000.9 (series).

(1) The approval of the lifesaving and emergency plan is the responsibility of the OCMI.

(2) Particular attention should be given to lifeboat locations. Lifeboats should be located away from cargo tanks and preferably in a sheltered location. In addition to embarkation concerns, the lowering and retrieval should be considered. Boat location in relation to the ship's propellers is also addressed in the MSM Volume IV, Technical, COMDTINST M16000.9 (series).

e. SOLAS equivalency. The lifesaving equipment requirements in the l983 Amendments to SOLAS may be considered as an equivalent for all U.S. vessels.

(1) Proposals to use the 1983 Amendments to SOLAS may be accepted by the OCMI, without specific Commandant approval in cases where there is a conflict between the U.S. regulations and the 1983 Amendments to SOLAS.

(2) Lifesaving equipment provided in accordance with SOLAS requirements must still bear a Coast Guard approval number if it is an item subject to approval under 46 CFR Part 160.

---

2. Lifeboats

a. Recertified lifeboats. Requests for a reduction in the number of persons a lifeboat is certified to carry are sometimes made to avoid overloading the davits, or because the owners do not wish to equip a boat with food and water beyond the requirements for the personnel aboard the vessel. In such cases, the OCMI may accept such a request if the following requirements are met:

(1) The reduced capacity of the lifeboats is adequate to accommodate the personnel aboard.

(2) The old capacity painted on each bow and the thwarts is deleted and replaced by the new capacity.

(3) An additional nameplate is affixed to the bow, showing that it has been recertified for a different number of persons. The plate must also contain the boat's serial number, date of change, port, and the inspector's initials.

(4) The Certificate of Inspection (COI) for the vessel is amended.

(5) A request for an increase to the original number of persons for which a lifeboat was approved should be handled similarly. However, the weight of the fully equipped and loaded lifeboat must not exceed the approved working load of the davits. The lesser capacity that was painted on each bow and the thwarts must be deleted and replaced by the greater capacity. The original nameplate showing the

reduced capacity must be removed and the vessel's COI must be amended to reflect the increased lifeboat capacity.

b. Lifeboat releasing gear.

(1) Mills-type. The Mills-type releasing gear was approved on 12 January 1943 for installation by the Imperial Boat Co.

(a) This releasing gear has no retaining device to prevent the accidental release of the hook attachment if the lifeboat should become momentarily waterborne during launching operations in rough seas.

(b) When such arrangements are found on a vessel, they must be corrected. One satisfactory remedy is to weld a small flat bar to the cheek plate of the lower block.

(2) Steward-type. The Steward-type releasing gear presents problems similar to the Mills-type releasing gear. It should be likewise checked during each inspection.

(a) Retaining devices attached to installations of this type have been found in defective condition or entirely broken off due to neglect or misuse.

(b) New retaining devices, similar to those originally approved for this type of gear, should be installed when unsatisfactory conditions are found.

(3) Rottmer-Type. In some instances, examination of the Rottmer-Type of gear has revealed that lifeboat footings had been placed over the releasing gear lever for the disengaging apparatus. This arrangement required the lifting of the footings before the releasing gear could be operated. This practice is unsafe and requires correction.

(a) A clear, open space must be provided in the way of the releasing gear lever. The footings must be removed from this space and should be well secured elsewhere in the lifeboat until the lifeboat has been launched and is clear of the ship. A stenciled notice to this effect must be placed on the footings.

(b) At all annual inspections of Rottmer-type installations, particular attention must also be directed to the center pieces of the universal joints in the releasing mechanism. If the center pieces indicate any undue stress, such as bent lugs or hairline cracks, they must be replaced with center pieces made from solid bronze.

(c) The upper and lower guide bearings of the releasing gear should be thoroughly lubricated. The entire releasing mechanism must be tested for satisfactory operation. Ship personnel must be instructed to lubricate the upper and lower guide bearings periodically.

4. Installations in existing lifeboats. When releasing gears are to be welded to the stem, sternpost, or keel of an existing lifeboat, the welding details must conform to the approved drawings for the new installation.

(a) The welding must be performed by a qualified welder.

(b) The plating must be removed in way of welds to permit the welder to have a clear lead, and to ensure a proper weld.

(c) All galvanized surfaces within 5 cm (2 inches) of the work area be ground to bare steel.

(d) Areas in the way of the welded and ground surfaces must be given two coats of "red lead," zinc chromate, or a similar coating.

c. Hand-propelled lifeboats. These are fitted with hand-operated propelling gear that meets the requirements set forth in Regulation 10, Chapter 3 of the SOLAS Convention. They should not be confused with motor lifeboats, which have different specifications and requirements under SOLAS. An oar-propelled lifeboat does not qualify as a hand-propelled lifeboat.

d. Steel wire sea painters. The Commandant does not approve the use of steel wire in lieu of manila line for sea painters. Such wire is not as easy to handle, may be difficult to release under tension, and can develop short ends of wire ("fishhooks") that are injurious to bare hands.

e. New nameplates for lifeboats. When a lifeboat nameplate is no longer legible, the inspector must require it to be replaced.

(1) The new plate should normally be obtained from the manufacturer of the lifeboat, and should be similar to and contain the same information as the original.

(2) When the replacement cannot be obtained from the manufacturer, a new one should be fabricated under the cognizance of the OCMI.

(3) The inspector must check the installation of the new nameplate, make an appropriate entry in the vessel's inspection files, and stamp the new nameplate

with his or her initials. The replacement plate should be made of brass or bronze, and stamped as follows:

Manufacturer's Name			Serial No.
Length	Beam		Depth
Capacity	Cu. Ft		Persons
Air Tanks	Cu. Ft		Built
Weight of Boat in Condition A			and Condition B
REPLACEMENT NAMEPLATE			
Inspector		(initials)	CG Port
Date			

f. Plastic buoyancy units. Accepted plastic buoyancy units must be used to replace metal air tanks in lifeboats used on inspected vessels. These units are accepted on the basis of samples, plans, and affidavits submitted by the manufacturer; tests of the product by the Coast Guard; and a check of the manufacturing procedure by the MSC. When authorized by the Commandant, the MSC may issue an acceptance letter to the manufacturer. Such units are not given approval certificates.

(1) Nameplate. Inspectors may recognize accepted units by the nameplate in the following format:

Type (or Model) _____
Lifeboat Buoyancy Unit
Cu. Ft. _____ Date _____
Wgt
Name and Address of Manufacturer
_____
_____

(2) Acceptance requirements. Plastic buoyancy units may be accepted for use in lifeboats, subject to the following two conditions:

(a) When used as replacements for metal air tanks in existing lifeboats, the buoyancy units must be the same size and shape as the metal tanks they replace.

(b) Each installation must be satisfactory to the cognizant OCMI.

g. Repairs to built-in side tanks by foam-in-place materials. Certain types of these materials, such as rigid polyurethane, have been authorized for use in repairs to lifeboats with built-in side tanks, as well as for other types of lifeboats, when accepted by the OCMI. Such repairs must be made in accordance with NVIC 2-63.

---

3. Life Rafts, Lifefloats, and Buoyant Apparatus

a. Repairs and reconditioning. No lifefloats or buoyant apparatus may be repaired or rebuilt for use on inspected vessels without having the original builder's nameplate affixed.

(1) This plate must contain the initials of the Marine Inspector who passed the equipment.

(2) Lifefloats or buoyant apparatus must be examined by a Marine Inspector before any repair or rebuilding to determine what work is necessary. If considered necessary, the canvas wrapping may be required to be completely removed for examination of the buoyant material.

(3) Periodic inspections must be made as the work progresses; a final inspection must be made when the work is completed.

(4) Any lifefloat or buoyant apparatus requiring complete or partial recovering or renewal of the wooden platform must have an additional nameplate affixed that bears the following data:

REBUILT BY
(Name and Address of Company)

_____

_____

_____

Date _____

Inspected by (Inspector's initials) _____

(5) Lifefloats or buoyant apparatus requiring only painting, renewal of netting, lines, seine floats, etc., must not be fitted with this additional nameplate. All materials used and procedures followed must conform to the specifications in 46 CFR 160.027 or 160.010, as applicable.

(6) When large numbers of lifefloats or buoyant apparatus are reconditioned, at least one in every lot of 25 must be subjected to a drop test and a buoyancy test, as described in the applicable specification.

(a) When small lots are reconditioned, one of the items should be tested in this way.

(b) If the inspector determines that the condition of the renovated equipment is adequate, the drop and buoyancy tests may be dispensed with. However, the inspector must require all such tests as deemed necessary, regardless of the number of floats or buoyant apparatus involved.

(c) See NVIC 12-61 for the inspection procedures for approved inflatable life rafts that have been stored for extended periods of time since their manufacture or last servicing.

b. Substitutions for lifeboats.

(1) For vessels not making international voyages, 46 CFR 33.07, 75.10-25, 94.10-55, and 192.10-55 permit substitutions of inflatable life rafts, in varying quantities, for other types of life rafts, lifeboats, and buoyant devices. When substitutions are made in accordance with these provisions, a vessel must be equipped with the following:

(2) Each side of the vessel must have one or more davit-launched inflatable life rafts of sufficient capacity to accommodate the total number of persons aboard.

(3) Each side of the vessel must have at least one launching device, the operation of which must require no one to remain aboard. Installations must meet the requirements of 46 CFR 75.27 and 75.37.

(4) Sufficient float-free inflatable life rafts to accommodate at least half of all persons aboard. On vessels with after and forward accommodation spaces, these rafts must be divided between the two spaces in proportion to the number of persons normally berthed at each location.

c. Alternate arrangements. On vessels where persons aboard have an escape route that will not require them to board inflatable life rafts by entering the water or descending farther than 4.5 meters (14.9 feet), float-free inflatable life rafts may be substituted for the davit-launched rafts and launching equipment. In addition, a motor-propelled rescue boat, suitable for ocean launching by no more than 3 persons with a davit or other suitable gear, may be accepted in lieu of one lifeboat aboard vessels of 1,600 GT or smaller.

d. Liferaft launching apparatus. The number of raft launching devices installed on the vessel and the number of rafts assigned to each launching device must be sufficient to put all persons aboard the vessel into life rafts in the water in no more than 30 minutes in calm weather.

(1) Rafts must be distributed equally on each side of the vessel. They must be stowed in the immediate vicinity of the launching devices, protected from weather and damage.

(2) Operation of launching devices must not interfere with embarkation aids and emergency lighting.

e. Requests for substitutions. Under the regulations, all requests for substitutions aboard vessels of 3,000 or more GT must be forwarded to Commandant (CG-CVC) for consideration.

(1) OCMIs should inform vessel owners and operators that the Commandant will review any request for substitution in light of these requirements.

(2) For vessels not making international voyages, equipment that meets equivalent standards are acceptable.

---

4. Life Preservers

a. Cork and balsa wood preservers. The SOLAS Convention requires a life preserver capable of supporting the wearer's head and turning an unconscious wearer face-up in the water. Cork and balsa wood life preservers manufactured under 46 CFR 160.003 and 160.004 do not meet these requirements.

(1) Manufacture of these life preservers ended on 1 July 1965, and all approvals for these items have been terminated.

(2) Cork and balsa wood life preservers manufactured prior to 1 July 1965 must have been retired from service by March 11, 1999, regardless of whether or not they remain in serviceable condition.

(3) Cork and balsa wood life preservers may not be used on any passenger, cargo, or tank vessel built or contracted after 26 May 1965 that is engaged in international voyages and is subject to SOLAS. Further, they may not be cleaned or repaired.

b. Numbers of preservers required. On tank, cargo, and miscellaneous vessels, the OCMI must require one life preserver for each person carried, plus an additional life preserver for each person on watch in the engine room, pilothouse, and the bow lookout station. For example, if the total number of persons carried on a vessel is 43, with three persons carried on watch on the bridge and three on watch in the machinery space, the entry on the COI must be: "50 life preservers, adult."

c. Stowage on tank, cargo, and miscellaneous vessels. Life preservers must be stowed aboard these vessels in accordance with applicable regulations. For additional life preservers provided for watchstanders in the engine room, pilothouse, and bow lookout station, any method of stowage that reasonably meets these requirements must be accepted (i.e., they must be stowed so as to be readily accessible).

d. Stowage on small passenger vessels. Life preservers must be stowed aboard "T-boats" in accordance with 46 CFR 180.78. An appropriate number of these life preservers must be stowed so as to be readily accessible to all hands at their operating stations.

e. Alternate marking for certain life preservers. Standard adult kapok and foam life preservers have been tested and determined to be suitable for children over 1.45 m (57 in) tall or weighing over 34 kg (75 lb).

(1) NVIC 14-92 specifies the manufacturers, model numbers and Coast Guard approval numbers affected by this determination. Since, for standard designs, the 1.45 m/34 kg (57 in/75 lb) cutoff has now superseded the old limit of 41 kg (90 lb), manufacturers will be incorporating this change into their required device markings.

(2) The new markings for these select models will now state that these devices are "approved for use on all vessels by persons over 57 in tall or weighing over 75 lb." These alternate markings supersede those previously required by 46 CFR 160.002 and 46 CFR 160.055.

f. Military-type life jackets. The military-type life jacket differs markedly in construction from that of the commercial, Coast Guard approved type. It has numerous leg and collar straps, removable pads in zippered compartments, and twice the number of strap adjustments. Also, the envelope, webbing, and tie tapes are not mildew inhibited. Finally, they are not generally available through commercial sources except as government surplus equipment; as such, their true condition will be questionable. Military-type life jackets are not Coast Guard approved and may not be used in lieu of Coast Guard approved Personal Flotation Devices (PFDs). For the use of military-type life jackets aboard Military Sealift Command (MSC) vessels and

Department of Defense (DOD)/National Aeronautics and Space Administration (NASA) instrumentation vessels.

---

5. Exposure Suits

a. Walk stations. Certain vessels operating in ocean, coastwise, and Great Lakes service are required to carry exposure (survival) suits for all personnel on board, plus additional suits for each work station, except where quarters are readily accessible.

(1) There is a difference in wording between the "work stations" requirement for exposure suits and the "persons on watch" requirement for life preservers. The older language for life preservers ignores the possibility that people may be on watch or at work in locations away from their quarters other than in the pilothouse, engine room, or the bow lookout station.

(2) For non-typical vessels, such as an oceanographic research vessel with on board laboratories or a service vessel with shop facilities, each work station must be evaluated to determine the number of exposure suits required for persons who work there, but do not live in adjacent quarters. The logic behind each calculation of exposure suits required should be documented in the local vessel file.

(3) Although many vessel regulations still use the term “exposure suit,” the current approval category for these suits is “immersion suit” and the terms may be used interchangeably.

b. Exposure suits in exempt areas. If a vessel normally operates in an exempt area, but its COI does not restrict operations to the exempt area the COI must be endorsed to require carriage of exposure suits when the vessel is operating in an area where exposure suits are required. The purpose of such suits is to prevent hypothermia through the use of closed-cell foam insulation and watertight integrity of the suit. They should be inspected during the vessel inspection to ensure that they will perform adequately.

c. Exposure suit drills. 46 CFR 97.15-35 and 46 CFR 199.180 require the master to ensure that each crewmember wears an exposure suit in at least one fire and boat drill per month. The master may conduct lifeboat drills without requiring the donning of exposure suits at his or her discretion, based on existing conditions. However, if the wearing of exposure suits is not required at lifeboat drills, the master must conduct an exposure suit drill immediately afterward.

d. Scope of drill. An effective exposure suit drill requires each crewmember to don a suit and receive a training lecture. Following the donning of the suits, the master should have two or three crewmembers perform some relevant physical action, such as moving a life raft, to demonstrate the reduced mobility while in such suits. Such exposure suit drills ensure that--

(1) Each crewmember can don an exposure suit properly;

(2) Each suit is in satisfactory condition and fits properly; and

(3) The correct number of suits is aboard.

e. Unapproved exposure suits. A number of questions have been raised regarding unapproved exposure suits that are identical to approved suits except for lack of inflatable collars. The inflatable collar is not necessary for buoyancy, but keeps the wearer's head in a more upright position. This is considered to lessen the wearer's fatigue and, therefore, increase the wearer's chances for survival.

(1) As the inflatable collars are not essential to the buoyancy of an exposure suit, existing suits that do not have them should be accepted for purposes of compliance with 46 CFR 94.415(d). This regulation permits unapproved suits in use before 1 November 1980 to remain in service if they are otherwise similar to approved exposure suits.

(2) Owners of suits that can be altered by attaching inflatable collars should be encouraged, but not required, to provide them.

---

6. Davits, Winches, and Falls

a. Boat falls. The Commandant has no objection to the use of nylon or polypropylene line for lifeboat falls, provided that the requirements of 46 CFR 33.10-10, 46 CFR 75.33, or 46 CFR 94.33 (as appropriate) are met.

(1) All installations must be acceptable to the OCMI.

(2) Installation tests must demonstrate that the operation and handling properties of such line are satisfactory for the purpose; strength comparable to the original manila line is required.

(3) Polypropylene line is acceptable as a substitute for manila line on a size-for-size basis. Both polypropylene and nylon should have black or blue pigments dispersed in them to resist ultraviolet sunlight deterioration.

(4) 3-inch circumference polypropylene is acceptable in lieu of 3-1/2 inch manila. Stainless steel wire is not acceptable.

b. Lifeboat winch system over-ride clutches. If a winch is observed to be operating in an unsatisfactory condition, an internal examination of the over-ride clutch system should be required by the inspector.

(1) Examples of unsatisfactory winch operation could include—

(a) If the winch's hand brake is allowing the load to slip or fails to stop a load when hoisting either by power or hand-cranking; and

(b) If the winch's hand break is failing to stop a load when lowering a load under the force of gravity.

(2) In general, it would be unreasonable to expect Coast Guard inspectors to perform anything more than a cursory examination of the internal workings of over-ride clutches. The focus of the inspector's attention should be on the operational performance of the lifeboat winch system.

(3) Once a faulty over-ride clutch has been identified by an inspector, action to correct its defects will require the participation of factory experts and servicing technicians.

(4) After overhaul of a faulty clutch mechanism, the presence of a Marine Inspector will again be necessary to observe that the problems have been corrected.

c. Davit stopper-bars for gravity davits. A primary concern in the arrangement of davit stopper-bars is their ability to be unshipped without having to raise the boat by handcrank or electric power.

(1) An acceptable arrangement is one in which the stopper-bars are freed simultaneously with the gripes, as the bars pivot at one end and swing outboard parallel to the tracks when released by a lever on each davit arm. Free and unimpeded lowering from the stowed position must be ensured.

(2) Certain arrangements have been proposed to reduce the likelihood of damage by raising the davits against a stopper-bar in place. These should not be used because the stopper-bar cannot be freed easily if the davit arm bears upon it.

(3) Clips that do not permit the stopper-bars to be unshipped without lifting the lifeboat are unauthorized modifications to approved equipment, contrary to the regulations, and should be removed whenever found.

d. Fiege wire sockets. A fiege clevis socket assembly is installed by seizing the wire near the end, driving a sleeve onto the rope, unlaying the end of the rope, fanning out the strand ends, cropping the hemp core, inserting a tapered fluted plug between the strands, and driving the plug to a solid seat inside the sleeve. The strands are compressed between the plug and sleeve by the tightening action of a covering socket, after which the seizing is removed. There is an inspection hole in the side of the socket through which the wire can be viewed to see if it is fully in place.

(1) Marine Inspectors must pay close attention to these sockets. Inspection of fiege clevis sockets must include a determination as to the tightness and condition of the sleeve and a sighting of the inspection hole to ensure that the wire is well up into the socket.

(2) If the sleeve is found to be loose or worn, the fitting should be removed and inspected, the wire cropped, and the socket refitted. If the sleeve is worn or distorted, it should be renewed. Care should be taken that the new sleeve is sufficiently long, or has been fitted far enough back on the wire, that the wire end extends to the limit of the socket cavity. The fitting should be proof tested after installation.

(3) For further details, see the Aids To Navigation Manual - Seamanship.

(4) The use of fiege fittings is discouraged. Poured sockets and swaged fittings are more reliable when made up professionally and load tested before use.

e. Davit span wires and manropes. Gravity and mechanical davits are required to have manropes suspended by a davit span wire. However, for davits used for launching enclosed lifeboats, the davit span wires and manropes may be omitted, as they cannot be properly used.

f. Limit switches for gravity davits. Under 46 CFR 160.0153 (k) (2), limit switches must be installed on all gravity davits. Their purpose is to bring the davit winch to a stop before the davit arm strikes the inboard limit of its travel. The final 12 inches of travel are then hand cranked. This avoids straining or breaking of the falls.

(1) Under 46 CFR 160.0153(i), the safety factor provided by limit switches is necessary on gravity davits whether the motors for their winches are built-in or portable.

(2) The use of a portable powering unit (such as an air or electric drill) does not exempt a gravity davit from the requirement for two limit switches.

---

7. **Considerations for Lifeboat Handling Equipment**

a. Blocks. The sheave enclosures of lifeboat davits and the blocks of their falls require regular examination for evidence of corrosion and excessive sheave clearance. This must include the floating blocks and the lower part of the tackle attached to the lifeboat.

(1) In one reported casualty, extensive corrosion of the steel becket strap on an upper tackle block caused the strap to part when the lifeboat was swung out for a drill. Outwardly, the block appeared satisfactory; however, the strap behind a cheek plate had wasted away. Hidden corrosion of this kind can be detected only through close examination and hammer testing.

(2) If the clearance between a sheave and its enclosing cheek plates is excessive, an opening may exist in which the wire rope fall can become wedged. Sheaves on the davit arms and tackles should be viewed through the opening of the enclosure to determine if this condition exists. If so, it is sufficiently serious to require corrective action.

b. Gravity davits. Examination of gravity davits aboard one vessel revealed an incorrect coil retainer replacement that might have short-circuited the master control switch and a rearrangement of the controller wiring that might have rendered operation of the limit switches useless. As a result, power to the hoisting motor could have been secured only by opening the emergency disconnect switch. It was also reported that trackway switches were so gummed by paint that the springs that would normally return them to the open position were unable to operate, wheels on the limit switch arms were frozen with paint and rust, rollers on the davit arms were frozen with rust, and that the lettering on the various switches indicating "on" and "off" positions were obliterated by paint. Inspectors must be satisfied that the ship's crew maintains gravity davits in safe operating condition (see 46 CFR 111.95-7 concerning main line emergency disconnect switches, master switches, and limit switches).

c. Rottmer-type releasing gear on Globe American Lifeboats. During World War II, the Globe American Corporation manufactured many 24 by 8 foot steel, oar, and motor propelled lifeboats with built-in tanks. These lifeboats were fitted with Rottmer-type releasing gear, manufactured under license, and most were installed aboard "Victory" ships. Since the war, some of these lifeboats may have found their way to other types of vessels.

(1) The Globe American releasing gear employed the use of so-called "aluminum bronze" for the hook lock, upper guide bearing, and lower guide bearing. This particular alloy has an ultimate tensile strength exceeding 100,000 pounds per square inch, but is subject to stress corrosion cracking in the marine environment. This cracking, not always readily discernible, may cause failure of the gear with only the weight of the light boat on the hooks.

(2) Requirements. Vessels fitted with 24-foot Globe American lifeboats must have all Rottmer-type releasing gear carefully inspected at each inspection for certification. This inspection requires complete dismantling so that all parts of the gear may be carefully examined. Of particular concern are the hook lock and the upper and lower guide bearings. Any fracture in these items, however slight, is sufficient cause for replacement of the part. Such fractures must not be brazed; any part found to have been previously repaired by brazing must be replaced.

---

8. **Upkeep of Wire Lifeboat Falls**

a. A review of casualties involving lifeboats and associated equipment has revealed a number of material problem areas. Failure of wire lifeboat falls accounted for more than 50 percent of these casualties. Recent statistics show that the number of casualties involving the failure of wire lifeboat falls is increasing.

(1) The most common cause of wire fall failure is lack of maintenance in areas that are normally inaccessible. Careful examination of these casualties showed that falls parted at inaccessible points in the vicinity of sheaves and guards, or where they remained stationary on the davit sheaves.

(2) Additionally, wire falls may be exposed to severe atmospheric conditions, frequent inundations by salt water and spray, and corrosive soot and stack gases. These elements combine with uneven wear to promote excessive deterioration of lifeboat falls.

b. Maintenance and lubrication. Wire rope falls must be free of broken strands and damaging corrosion, and must be well lubricated along their entire length. Particular attention should be paid to areas where the falls pass through blocks, sheaves, and other obstructed areas.

(1) The exposed portions of the wire falls can be lubricated without lowering the lifeboats. However, in places where falls are hidden by blind sheaves or guards, they cannot be properly lubricated without lowering the lifeboats and exposing all sections of the wire rope.

(2) Wire rope that has a fiber core may absorb moisture, which causes internal corrosion.

(3) Even after lowering the lifeboats, there may be sections of the wire rope that do not move and where it is impossible to lubricate the surface riding hard against the sheave.

(4) Lubricating options. One way to lubricate unexposed areas of the wire lifeboat falls is to lower the boat a few feet so that these critical spots are clear. Another is to take the load off the falls and free them from the hidden areas in the blocks. These parts of the wire rope should have lubricant thoroughly worked into and completely around the strands. The best lubricants are lightbodied compounds, with rust inhibitors, that have good penetrating properties. These lubricants can be dipped, swabbed, or sprayed onto the wire rope.

c. All lifeboat falls must be thoroughly examined at least once every 2 years. The Marine Inspector must require the lifeboat to be cradled or stopped off with the load taken off the falls.

(1) The surface of the wire rope must be checked for wear and for the presence of "fishhooks" or splinters. A marlinspike can be passed into the lay of the wire and backed to expose the interior of the wire rope.

(2) If there is any doubt about the condition of the falls, they must be replaced.

(3) If the falls are deemed satisfactory for continued service, but there is some question as to their maintenance in those areas that have been in contact with sheaves or covered by guards, the falls should be end-for-ended.

(4) If it is more practicable to cut a few feet from the standing end of the wire falls to reposition those questionable areas, the inspector may accept this action.

d. Workbooks. All maintenance performed on lifeboat falls should be recorded in the vessel's workbook. The inspector should examine these records to determine the age of the falls and whether any shipboard maintenance has been performed since the falls were last renewed.

9. **Hydraulic Starting Systems for Survival Craft**

a. Good safety practices require lifesaving equipment to be properly maintained and ready for immediate use.

(1) Under the regulations, the motors of lifeboats aboard inspected vessels must be operated for at least 5 minutes, once a week (see 46 CFR 33.01-15, 33.25-20, 78.17-60, 97.15-45, and 196.15-45).

(2) Certain motor lifeboats and survival capsules are equipped with hydraulic starting systems that store power in pressurized accumulators. Occasionally, a system leak occurs when an accumulator loses pressure and becomes ineffective. If the leak is external and allows oil to be lost from the hydraulic system, pumping may not restore system pressure and starting of the engine will be impossible.

b. Inspection requirements. Masters and Persons in Charge should routinely examine such hydraulic systems during weekly fire and boat drills to ensure that they do not have leaks that allow the accumulators to discharge.

(1) Each accumulator should be at full pressure at the conclusion of the engine test and not lose pressure between tests. A short-term check of the system can be made by bringing the accumulator up to full pressure. After several hours, there should be no noticeable loss registered on the pressure gauge. A minimal interval of 4 hours between tests is recommended, although a 24-hour interval is more effective.

(2) Marine Inspectors must check the condition of the hydraulic systems of lifeboats and survival capsules during regular inspections.

---

10. Emergency Water and Provisions for Survival Craft

Emergency water, provisions, and condensed milk, like all other items of survival craft equipment, are required to be “of good quality, efficient for the purpose they are intended to serve, and kept in good condition.” Emergency water, provisions, and canned milk that are overage or in leaking, rusting, bulging, or otherwise damaged containers do not meet these standards and must be replaced.

a. Emergency water. Canned water should be checked for vacuum retention by the slap test. Any clicking sound is evidence of an acceptable vacuum.

(1) Doubtful cans can be checked by opening some of them. If a hiss is heard consistently as these cans are opened, the rest of the doubtful cans may be accepted, and only the opened cans need to be replaced.

(2) Water in flexible pouches should be checked by squeezing the pouch. Any leaking water or air is cause for rejection.

(3) All approved water containers are marked with a packing date, and some may have an expiration date. All containers past their expiration date should be replaced. Containers without an expiration date should be replaced if they have been packed more than 5 years before the date of inspection.

(4) Lifeboats meeting the 1983 SOLAS Amendments (those with approval numbers starting with “160.135”) must carry 3 liters (3.17 quarts) of water per person.

(5) Inflatable liferafts meeting the 1983 SOLAS Amendments (those with approval numbers starting with “160.151”) must carry 1.5 liters (1.58 quarts) per person.

(6) Approved desalting apparatus may replace up to 1/3 of the water carried in survival craft. In addition to chemical treatment systems, manually operated reverse osmosis desalinators are approved to replace the quantity of water they are rated to produce in 48 hours, up to the limit of 1/3 or the water required.

b. Emergency provisions.

(1) Canned emergency provisions can be checked only by visual examination of the condition of the container.

(2) Emergency provisions in vacuum-packed flexible pouches should have packaging material tightly compressed against the contents. Loose contents indicate a loss of the vacuum seal, and such pouches should be replaced. Non-vacuum-packed pouches should be squeezed to check for air leakage, as with flexible water pouches.

c. Expiration dates. Approved emergency provisions are marked with a packing date, and some may have an expiration date.

(1) All packages past their expiration date should be replaced. Packages without an expiration date should be replaced if they are more than 5 years old.

(2) Canned provisions with no dates are well over 5 years old and should be replaced. None of these undated cans were vacuum-packed, therefore air in the container will cause fats in the provisions to turn rancid over time.

(3) If an operator objects to the rejection of old provisions, the operator should be given the option of submitting a sample of the provisions in question to a food laboratory to determine fitness for human consumption.

(4) Lifeboat regulation. Lifeboats that meet the 1983 SOLAS Amendments (those with approval numbers starting with "160.135") must carry provisions equaling at least 10,000 kJ (2,400 calories) per person.

(5) International liferaft regulation. Inflatable liferafts with "SOLAS A" Packs that meet the 1983 SOLAS Amendments (those with approval numbers starting with "160.151") must carry provisions equaling 10,000 kJ (2,400 calories) per person.

(6) Calorie counts. In order to be consistent with new SOLAS requirements, many emergency provisions will be packed in sizes other than multiples of 3,600 calories (1 lifeboat ration) and 1,800 calories (1 liferaft ration). Total calorie counts, rather than package counts or weights, should be used to determine the minimum amount of provisions required.

(7) Emergency provisions have approval numbers starting either with "160.026" or "160.046." Both are acceptable and may be used interchangeably.

(8) Canned condensed milk. Unless otherwise indicated on its container, canned condensed milk is not intended for long term storage and should be replaced each year during the annual stripping and cleaning of the lifeboat.

(a) An operator may be given the option of submitting samples to a food laboratory for determination of fitness for human consumption if the operator feels that the milk can be carried for an additional year.

(b) An operator should also be given the option of replacing canned condensed milk with approved emergency rations, using 1,400 calories as the equivalent of 1 lb. of canned milk.

(c) Lifeboats meeting the 1983 SOLAS Amendments are not required to carry condensed milk.

c. Substitutions. Lifeboats other than those meeting the 1983 SOLAS Amendments should not be permitted to substitute the 1983 SOLAS emergency water and provision quantities unless all equipment in the lifeboat is to the 1983 SOLAS Amendment Standards. Substitutions should not be made in inflatable liferafts, unless they are part of an approved modification to the manufacturer's servicing manual.

I. FIRE PROTECTION EQUIPMENT

1. Introduction

Tests and inspections of firefighting equipment during the inspection for certification are prescribed in the regulations. The regulation covers situations requiring particular attention or further explanation.

NVIC 6-72 and its Change 1 provide additional guidance for the design and review of fixed firefighting equipment aboard merchant vessels. In particular, Change 1 specifies the conditions under which Halon 1301 extinguishing systems are equivalent to CO^2 systems. For several years, small Halon 1301 systems have been approved for use on recreational boats and on uninspected vessels such as tugs and fishing vessels. These units are so marked and bear an approval No. "160.029/--/--." Halon 1301 is not a hazardous vaporizing liquid, so it is not prohibited by 46 CFR 25.3010(e). Halon 1301 is approved under 46 CFR 25.15 as equivalent to the CO^2 system required by 46 CFR 25.3015(a). These systems should be installed in accordance with approved manufacturers' installation manuals.

Fixed mechanical foam systems are required to have a foam analysis completed to certify that the foam concentrate remains within acceptable parameters established by the manufacturer. At each Inspection for Certification, it is incumbent upon the vessel owner/operator to obtain documentation from the foam manufacturer or his authorized representative that details the specific gravity, pH, percentage of water dilution and solid contents of the foam. The documentation must also certify that the foam is suitable for firefighting per requirements detailed in 46 CFR 31.10-18, 46 CFR 107.235(b)(2)(iii), and NVIC 6-72.

2. Excess Equipment

a. Inspected vessels. For uniformity in the listing of firefighting equipment carried aboard inspected vessels, the COI must record only the fire hose, fire extinguishers, and other gear required by law and regulations. The recording of excess equipment would effectively compel its carriage on all voyages, even though the regulatory requirements might be considerably exceeded. However, all excess firefighting equipment that is carried aboard an inspected vessel must be of approved types (as required by 46 U.S.C. 3306), tested at inspections, and kept in good operating condition.

b. Uninspected vessels. Under 46 CFR 25.30-5(b), all fire extinguishing equipment aboard uninspected vessels must be of approved types.

---

3. Portable Fire Extinguishers

a. Identification. Portable fire extinguishers can be identified as an approved type by the presence of one of the following:

(1) A UL, UL of Canada (ULC), or Factory Mutual Research (FM) label on the extinguisher bearing a marine-type marking such as "Marine Type USCG B-1," "Marine Type USCG Type B:C, Size II," or "Marine Type USCG Type B:C, Size I, Approval No. 162.028".

(2) A make and model number that corresponds to the listing under the manufacturer's name in the "Formerly Approved" section of Equipment Lists.

(3) Extinguishers that cannot be identified as types that are approved or previously accepted on a case-by-case basis must be removed.

b. Coast Guard Certificates of Approval for portable fire extinguishers. The Coast Guard no longer issues Certificates of Approval for portable fire extinguishers. All outstanding certificates were terminated on 1 January 1962. From that date, portable extinguishers have been given approvals based on UL listings. All fire extinguishers manufactured while Certificates of Approval were in effect may be used, provided they are in serviceable condition. However, the use of vaporizing liquid fire extinguishers manufactured after 1 January 1962 is prohibited.

c. Acceptance of UL-listed fire extinguishers. UL-listed fire extinguishers that do not bear Coast Guard marine-type markings are acceptable as equivalent to those bearing such markings, provided that they are of the appropriate types and sizes for their service. NVIC 13-86 provides a table comparing appropriate types and sizes of extinguishers.

---

4. Semiportable Fire Extinguishers

a. Substitution. Substitution of a required, minimum sized, semiportable fire extinguisher with smaller units totaling equal or greater capacity is not authorized, because the time required to position and activate a second extinguisher may be too long to prevent a fire from reflashing.

b. Outside use. Footnotes to 46 CFR 34.50-5(c) and 108.495(b) require doubling the quantity of agent if the unit is used outside. This double capacity must be provided by a single unit.

---

5. Carbon Dioxide Systems

a. Small passenger vessels and uninspected vessels.

(1) 46 CFR 181.20-5 contains provisions for the use of a single portable or semiportable CO^2 fire extinguisher as a fixed system on small passenger vessels, under certain conditions.

(2) Vessels built before 1 June 1958 are permitted to use up to two such extinguishers for this purpose, provided controls were capable of discharging both units simultaneously. These installations may remain in use, provided they are maintained in good condition.

(3) 46 CFR 25.30-15 contains provisions for fixed CO^2 systems on uninspected vessels.

b. Potential hazards and means of escape. Fixed CO^2 systems pose a potential hazard to vessel personnel and Marine Inspectors.

(1) One casualty at sea, which was given widespread notice in Commandant Notice (COMDTNOTE) 16711 of 23 August 1978, illustrated the need to ensure adequate means of escape from CO^2-served spaces. In this casualty, the chief engineer inadvertently discharged CO^2 in a space with an inward-opening door. Crewmembers were unable to open the door until pressure in the space subsided, and some were asphyxiated. Similar accidents have occurred during system testing and servicing.

(2) The inspector should ensure that adequate precautions are taken.

(3) During servicing, no one should be permitted in spaces served by CO^2 unless all CO^2 bottles are completely disconnected.

(4) During inspections, CO^2 storage provisions and means of escape must be evaluated. Recommended protective measures include outward-hinged doors, kick-out panels in doors or bulkheads, a stenciled warning to lock the door open when the space is occupied, and sufficient vent openings to the atmosphere.

(5) Regulation 5.1.13, Chapter II-2 of SOLAS 74/78 also acknowledges these hazards by requiring outward-opening access doors in CO^2-served spaces aboard subject vessels.

---

6. Fire Hose

a. Markings. 46 CFR 34.1010 (l), 76.1010 (l) (3), and 95.1010 (l) (4) includes specifications as to the proper marking and testing of fire hoses.

(1) The prescribed marking consists of the words "Underwriters Laboratories, Inc., Inspected, Rubber Lined (or Unlined) Fire Hose," followed by a serial number. These words must appear on a cloth or rubber label permanently affixed to the fire hose.

(2) If a fire hose does not bear the UL label, the vessel owner must provide the OCMI with certified copies of a test report by an independent laboratory, showing that the fire hose conforms to the appropriate specifications noted in the above regulations.

b. Testing. Questions have arisen over the recommendations of both UL and the NFPA that lined fire hoses never be wetted except for use at a fire. The Commandant believes that the benefits derived from the periodic pressure tests required by regulations outweigh any harmful effects of wetting, provided the hose is properly dried before stowage. Therefore, inspectors should caution shipboard personnel that particular care is necessary to dry fire hoses thoroughly after each wetting to avoid deterioration. All new hoses placed aboard vessels must be tested in accordance with the regulations at regular inspection intervals.

c. Length. UL standards allow some leeway in hose length; designated “50-ft” hoses must be at least 48 feet, and designated “75-ft” hoses must be at least 71 feet. On approximately one out of every ten lengths, a UL inspector will conduct a burst test. The sample used in the burst test will be cut off and used for physical and chemical tests. This sample will not be greater than 40 inches in length.

d. Fire hose. In general, 2-1/2 inch hoses should be limited to use in exterior spaces or large cargo holds, such as on Roll-On/Roll-Off (RO/RO) vessels. When a 4-foot applicator is required at the fire station, only 1-1/2 inch hoses should be used.

e. Defective hoses. Under 46 U.S.C. 3305, a fire hose that is too defective to be repaired must be destroyed in the presence of the inspector.

---

7. Combination Fire Hose Nozzles

a. New installations. New installations and replacements of combination nozzles must be of approved types, as required by 46 CFR 34.10-10, 76.10-10, and 95.10-10.

(1) The approved types are listed in the Equipment Lists.

(2) The 1-1/2 inch/4 ft. applicators are intended for use with 1-1/2 inch combination nozzles in propulsion machinery spaces that contain oil-fired boilers, internal combustion machinery, or oil fuel units. Because of orifice sizes on approved nozzles, neither self-cleaning line strainers nor internal strainers are required.

b. Existing installations. Certain combination solid stream and water spray fire hose nozzles were previously accepted, pending development and adoption of new designs. Those installed on vessels prior to the approval of combination nozzles under 46 CFR 162.027 may continue in service, provided that they are in serviceable condition. Self-cleaning line strainers are required with these nozzles, unless they are fitted with internal self-cleaning strainers. The accepted nozzles are--

(1) Types SG-40 and SG-47, manufactured by the Rockwood Sprinkler Co., Worcester, MA; and

(2) FOGNOZL 4-AN and 4-NAP, manufactured by the Akron Brass Manufacturing Co., Inc., Wooster, OH.

---

8. Fire Main/Foam Cut-Out Valves

a. Identification. Regulations require that fire main cut-out valves must be sealed open, except when closed to prevent freezing.

(1) The original provisions for cut-out valves and drains in the fire main were intended to prevent freezing in parts of the fire main system located on weather decks. In more clement weather, the cut-out valves were to be kept open for efficient use of the fire main system in event of emergency. With the advent of dual-purpose ships (those built for easy conversion to military use), the trend has been toward the use of cut-out valves to isolate or cross-connect different sections of fire mains. Therefore, a means for quickly identifying that fire main or foam cut-out valves are maintained in an open position has become necessary.

(2) All isolation or cut-out valves should be conspicuously marked and labeled (see 46 CFR 34.10-15(c)). In addition, the fire control plan must show all isolation or cut-out valves, and must be permanently displayed for use in an emergency.

b. Regulatory intent. The intent of the word "sealed" in the regulations is that a seal cannot be easily broken without the use of a key, axe, or chisel, and will indicate that the valve should normally remain open. In addition, it is easy to see whether sealed valves are open or closed. The sealing of these valves in an open position is a function of the vessel's operators. It is not intended that the valves be sealed open by the Marine Inspector. Therefore, the inspector must accept seals provided by the vessel's operators to obtain the results intended by 46 CFR 76.10-10(e) and 95.10-10(e).

---

9. **Sprinkler Systems**

a. Introduction. Many instances have been found where the operation and maintenance of vessel sprinkler systems have not met required standards. Reports of deficiencies for various sprinkler systems show failure in every category, including corroded and shorted electrical fittings; frozen and deteriorated mechanical items; piping that was corroded, completely plugged (including the pump suction line), fractured, and air-bound; plugged sprinkler heads and systems secured at the pump so as to prevent automatic operation.

b. Inspection procedures. On small passenger or excursion vessels, tests and examinations of the sprinkler systems must be made during the inspection for certification.

(1) On large vessels operating on fixed schedules, such tests and inspections may be spread out over the 12-month period under conditions and schedules established by the OCMI and the vessel's owners or operators.

(2) All automatic features of wet or dry-pipe systems must be tested and examined to ensure efficient operation. Each zone must be thoroughly flushed out with fresh water for a sufficient period of time to clear the system of scale and sediment. The flushing discharge must be routed through drain valves, test vents, or openings from which sprinkler heads have been removed. As many drain openings must be provided as necessary to clean the entire system.

c. Examination of sprinklers. Dry-pipe and manually operated sprinkler systems must be thoroughly drained after tests have been completed. Scheduled checks for accumulated water in dry-pipe systems should be made after the vessel is returned to service. Regardless of the system type, a sufficient number of sprinkler heads must be

removed for examination of both the head and piping, with particular emphasis on dropped heads and low branch lines. The conditions found in this examination will determine to what extent additional removals should be made. After checking and examining the heads, the system should be reassembled, inspected, and checked to ensure satisfactory operation.

d. Potential problems and corrections.

(1) If there are closed valves in the system, have the chief engineer chain and lock them open, if necessary. No action of the crew should be necessary for system operation.

(2) If the pump won't come on automatically, consider detaining the vessel until the problem is determined and repaired.

(3) If there is no emergency power to the pump, consider detaining the vessel until emergency power is available.

(4) If the flow sensors are inoperative, thus incapacitating one zone of the fire detection system, the appropriate correction varies. If the vessel has an additional fire or smoke detection system to cover the same area, the appropriate correction is to require timely repair of the problem. If the vessel does not have an additional fire or smoke detection system to cover the same area, consider detaining the vessel and requiring immediate repair.

(5) If the distribution system piping wasted and holed (discovered because system was not charged to the sprinkler heads), consider detaining the vessel and requiring immediate repair of the piping so that sprinkler system can be fully pressurized. If repairs must be accomplished at a shipyard, consider removing passengers and extraneous crew, requiring extra precautions and patrols to protect the crew members who will be remaining on board for the transit.

---

10. International Shore Connection

International shore connections are subject to the requirements of ASTM F-1121.

Fabrication either on board a vessel, in a shipyard, or other shore facility is not precluded by the standard.

The ASTM standard does not require any specific marking.

J. NAVIGATION EQUIPMENT

1. Inland and International Rules

Vessels must be equipped with navigation lights and sound-producing devices, as prescribed in 33 U.S.C. 1601-1608 (International) and 33 U.S.C. 2001-2072 (Inland). Penalty provisions are contained in 33 U.S.C. 1608 and 2072.

Vessels operating seaward of the demarcation lines described in 33 CFR Part 80 must comply with the International Regulations for Preventing Collisions at Sea, 1972 (72 COLREGS). The 72 COLREGS became effective on 15 July 1977.

Vessels that are in compliance with the construction and equipment requirements of the International Rules are in compliance with the Inland Navigation Rules Act of 1980 ("Inland Rules"). The Inland Rules, enacted on 24 December 1980, became effective on 24 December 1981, except for the Great Lakes, where they became effective 1 March 1983.

Specifications for lights and sound signal appliances are prescribed in the Navigation Rules, reprinted in Navigation Rules, International - Inland, COMDTINST M16672.2D.

2. Navigation Lights

a. Light specifications. Annex I of the International and Inland Rules specifies navigation light requirements in terms of colors, arcs, ranges of visibility, and position.

b. Fixtures. 46 CFR 111.75-17 contains the regulations applicable to electric navigation lights. There are no regulations that specifically prohibit the use of non-electric lights, except where the use of open flames is prohibited. However, the requirement in the regulation for a navigation light indicator panel generally precludes use of non-electric lights.

3. Sound Signal Appliances

Annex III of the International and Inland Rules contains sound-producing appliance requirements which are aimed at increasing a mariner's ability to identify targets audibly through the use of different sound characteristics for vessels of different lengths.

The sounds produced by whistles, bells, and gongs should all be distinctive so that they are not confused with each other. The sound produced by most whistles is generally shrill, and is accomplished by forcing a stream of air or steam through a circumferential slot into a cylindrical chamber. The tone and sound of a bell must not be confused with those of a gong. Under the Navigation Rules, a fog horn is no longer specified as part of the signaling equipment. A fog horn may not be substituted for the whistle required by those rules.

a. Electronic sound devices. Annex III 2. (b) specifies that bells must be made of corrosion resistant material and further specifies bell mouth diameter. However, electronic devices which meet the sound requirements may be substituted for the mechanical equivalent if a manual back-up is provided.

b. Fog gongs. The Navigation Rules require fog gongs aboard vessels of 100 or more meters (328 ft.) in length.

   (1) The sound produced by the gong must be easily distinguished from that of the ship's fog bell, at an equally audible range. The gong must meet the specifications in Annex III to the Navigation Rules.

   (2) When there is doubt about the suitability of an instrument, a demonstration must be conducted under the supervision of the OCMI and a report submitted to Commandant (CG-CVC) via the chain of command.

c. Vessels less than 12 meters in length. These vessels are not required to carry whistles and bells that meet the technical standards in Annex III of the Navigation Rules. However, if no such equipment is carried, the vessel must be provided with some other means of making an efficient sound signal. Whistles and other sound-producing mechanical devices (e.g., a Freon-operated horn) may be accepted for use aboard vessels less than 12 meters in length, provided they are in proper working condition and produce an efficient sound signal.

---

4. Technical Requirements

Specific requirements for navigation lights, which are similar for Inland and International Rules, are contained in Annex I to the 72 COLREGS and the Inland Rules. Annex III of the Rules provides technical details of sound-producing appliances.

---

5. Definitions and Interpretations

The following definitions or interpretations are in addition to those listed in the Navigation Rules (Rule 3 or Annex I):

a. At or near the side of the vessel, in Annex I 3. (b), means not more than 10 percent of the breadth of the vessel inboard from the side, up to a maximum of 2 meters.

b. Existing vessel means a vessel built (keel laid or corresponding stage of construction) prior to the effective date of the 72 COLREGS (15 July 1977) or enactment of the Inland Rules (24 December 1980).

c. Forward masthead light is interpreted as describing either a single masthead light or the forward most masthead light on vessels with more than one masthead light (Annex I 2. (g) or 3. (b)).

d. In front of means forward of. Sidelights may be in line with the forward masthead light, but not in front of it.

e. Length means Length Overall (LOA).

f. Masthead light is used in the Annex for vessels less than 20 meters in length which are unlikely to have 2 masthead lights.

g. Measurements; all vertical height measurements are to be taken from the center of the lens; horizontal measurements are to be taken from or along the centerline of the vessel.

h. Normal conditions of trim in Annex I 2. (b) means all conditions either loaded or ballast for ocean voyages.

---

6. Extensions

To facilitate the transition from the old International, Inland, and Western Rivers to the new International and Inland Rules, certain exemptions or extensions were provided.

Rule 38 in both Rules authorized an extension period of 4 to 9 years from the effective date of the Rules to bring the vessel into compliance with some of the more significant rule changes.

The time allowed by these extensions has been considered sufficient to bring existing vessels into compliance. There are no provisions in the Rules for further extensions or exemptions. The Coast Guard does not have the authority, except as provided for under Certificates of Alternative Compliance (CACs), to waive any requirements.

---

7. Exemptions

a. There is an exemption available from the requirements of International Rule 23 (a) for certain vessels, provided they comply with the Inland Rule 23 (a) (i) by carrying a masthead light as far forward as practicable. This exemption has been issued to all commercial, recreational and public vessels less than 20 meters which fit into one of the following categories:

(1) Inspected vessels.

(2) Federally documented vessels.

(3) Vessels registered with a state.

(4) Public vessels.

(5) Vessels built in the United States and intended for sale in the United States or its territories.

b. This exemption applies retroactively to vessels built before issuance of this waiver. Specific information about this exemption is contained in COMDTINST 16672.4 of 11 May 1993.

---

8. Problems in Compliance with Light Requirements

The new Rule requirements have posed certain problems relative to existing vessels:

a. Ranges. The range requirements for most lights have increased under the Rules. The relationship between range of visibility and luminous intensity has also changed. However, many lights on existing vessels were much brighter than originally required and may meet the new Rules.

b. Color. Color coordinates for green lights have been narrowed from those required for existing vessels. This has resulted in a shift toward a bluish tint in the manufacturing of green dyes for navigation light lenses. The most commonly manufactured green plastic dyes do not have good ultraviolet stabilization; constant exposure to solar ultraviolet radiation will alter the green tint in a few years. This may be beneficial, in that it moves the color coordinates of an older light lens into the region required by the new Rules. It may also move them beyond the acceptable region. Tests will determine the color coordinates of the lens only at the time of testing, as navigation lights are constantly exposed to ultraviolet radiation.

c. Horizontal sectors. Annex I of both sets of Rules gives specific arcs in which certain intensities of light are required.

(1) For example, sidelights, as fitted on the vessel, must show the minimum required intensities in the forward direction. The intensity must decrease to reach "practical cut-off" (i.e., one-eighth of the minimum required sector intensity) between 1 and 3 degrees outside the prescribed sectors.

(2) Prior to adoption of the 72 COLREGS and Inland Rules, lights were "eyeballed" for a reasonable decrease in intensity at the sector boundaries; no values were assigned to the intensity in the cut-off region.

(3) The Rules state that the lights must achieve the specified cut-off as fitted. In the forward direction, the 72 COLREGS require sidelights, as installed, to reach practical cut-off between 1 and 3 degrees outside the prescribed sector. The 72 COLREGS require the intensity between 0 and 1 degree outside the prescribed sector to be greater than the practical cut-off value. This allows both sidelights to be visible dead ahead of the vessel at a distance dependent upon their separation.

(4) This may present a problem for some vessels. For example, containers stacked forward of the sidelights could act as large screens, preventing the 1 degree spillover. A CAC is not appropriate in such cases; the lights should be relocated or the obstruction removed.

d. Vertical sectors. Annex I of both sets of Rules also establishes requirements for vertical sectors of navigation lights. Previously, this parameter was not even considered. Consequently, "existing vessels" may not be in compliance.

e. Masthead separation. Masthead lights must be separated by a horizontal distance of one-half the length of the vessel but need not be more than 100 meters (Annex I 2. (b)).

(1) Most vessels with a midship house were built with the after mast located amidships and will not be able to meet this separation requirement without moving the mast(s). Also, moving the after mast from the midship house to the after house generally requires the after mast to be higher than original to meet height separation requirements. For this reason, Rule 38 exempted vessels under 150 meters (492.1 ft.) and gave larger vessels 9 years to comply.

(2) This extension was made with two-house vessels in mind and in consideration of the economic hardships involved with moving/raising masts. Therefore, CACs should not be granted for masthead separation unless moving the masts would interfere with the special purpose of the vessel.

f. Sidelight placement. Sidelights must not be in front of the forward masthead light (Annex I 2. (g), 3. (b)). This rule also applies to single masted vessels and will require sidelight repositioning on many vessels in the 20-50 meter range. Some vessels (i.e., tugboats, workboats, or fishing vessels) may qualify for CACs due to the special purposes of the vessels.

g. Sidelight screens. Sidelight screens must be painted matte (flat) black to comply with the 72 COLREGS/Inland Rules. Under Inland Rules, a vessel less than 20 meters in length needs to be fitted with screens only if they are necessary to bring the sidelights into compliance with the horizontal sector requirements of the Inland Rules.

---

9. Certificates of Alternative Compliance (CACs)

Regulations give provisions for alternative compliance with the 72 COLREGS in 33 CFR 81.5 (International) and 33 CFR 89.5 (Inland). CACs are intended only for U.S. vessels that cannot fully comply with the Navigation Rules. CACs are available for vessels of special or unique design that cannot meet the Rules without interfering with their mission. CACs cannot be used as a means for granting an extension of time for compliance.

a. Issuance of CACs. The authority to issue CACs has been delegated to the chief, marine safety division at each district office for the purpose of permitting closer review of the actual vessel and to make Headquarters available for appeals.

(1) Since the potential for a lack of uniformity between districts exists, communication between districts is strongly encouraged.

(2) Certificates should include the information required in 33 CFR 81.9 or 89.9. A copy of the certificate must be forwarded to Commandant (CG-CVC-2), along with a copy of the *Federal Register* notice required by 33 CFR 81.18. After

review by Commandant (CG-CVC-1), the certificates will be filed with Commandant (CG-PSA).

(3) Any questions or unusual cases should be referred to Commandant (CG-PSA)for Rules (both Inland and COLREGS) interpretation, Commandant (CG-CVC-1) for inspection and compliance, or Commandant (CG-ENG-3) for technical assistance and fixture approvals.

b. Class certificates. When an owner has several vessels of the same general configuration which would qualify for a CAC, a class certificate may be issued. For a class certificate, the CAC should be issued listing a representative vessel name and class with an addendum listing all other vessels in the class. The vessel owner is responsible for posting certified copies of the certificate on the bridge of each vessel.

c. Typical vessel types.

(1) Offshore Supply Vessels (OSVs). The majority of CACs have been issued to OSVs where full compliance would have required placement of the after masthead light on the centerline between the midpoint of the vessel and the stern. This would severely interfere with the vessel's purpose.

(2) Tugboats, workboats, and fishing vessels. The forward mast (or only mast) of smaller workboats, like tugs and fishing vessels, is often required to be located behind the deckhouse due to the special nature of the vessel. Full compliance would require placing sidelights aft of the foremast. This could present glare problems or otherwise interfere with the special nature of the vessel. A CAC may be issued when the vessel owner adequately demonstrates that sidelights are in the closest possible compliance without interfering with visibility or the purpose of the vessel.

(3) Other vessel types. Other vessel types that warrant alternative compliance may include a ferry with an off-center deckhouse, an aircraft carrier, or certain Mobile Offshore Drilling Units (MODUs).

10. Compliance Responsibility

Compliance with 72 COLREGS and the Inland Rules is the responsibility of the vessel operator/owner. Under international treaty, each signatory nation is responsible for enforcing the Rules consistently. Therefore, the Coast Guard will take corrective action whenever discrepancies are noted.

---

11. Inspection Enforcement Action

Special inspections to determine compliance are not required and Coast Guard resources are generally insufficient to conduct special examinations solely for Rules verification. However, when Rules discrepancies are noted or reported, they must be further investigated. During routine inspections (annual or COI), inspectors should include Rules requirements in the inspection scope and assess compliance by interviewing the master/vessel representative and by visual/audible verification.

---

12. Compliance Verification

Individual testing of sound and light appliances, as installed, is the best means of verifying compliance. Obviously, this is not practical in all situations nor is it possible without sophisticated measuring equipment and/or extensive surveys. For example, bells or gongs may comply with the Annex III requirements at the time of manufacture, but placement, mounting, and painting all affect final sound emissions. Therefore, demonstration of compliance will be the owner's responsibility when compliance is in question. The following guidelines for compliance acceptance/examination apply:

a. Foreign vessels. Foreign vessels holding valid SOLAS Safety Equipment Certificates (SECs) will be considered in compliance with the 72 COLREGS, unless obvious discrepancies are noted.

b. Existing U.S. vessels. Existing U.S. vessels will be considered to comply unless obvious discrepancies are noted. Rules inspections will be conducted as a part of regularly scheduled inspections. Special plan review or equipment affidavits will not normally be required for existing vessels.

c. New U.S. vessels. Plan review for new U.S. vessels will include navigation light placement and equipment approvals. Review or approval by ABS is considered acceptable evidence of compliance.

---

13. Non-Compliance Actions

Vessels not in compliance should be issued deficiency notifications. Appropriate entries must be made in the Marine Information for Safety and Law Enforcement (MISLE). Deficiencies for foreign vessels and U.S. vessels should be issued via a violation report (MISLE Marine Violation Report Recommendation (MVRR) Product). In general, the unit may issue a letter of warning within the first year of the violation if corrective action is already scheduled. Stronger action may be warranted based on the operator's prior deficiency record, prior notice of the Rule requirements, and/or no planned corrective action. Unless the violation is considered a safety hazard, a reasonable time should be allowed for corrective action (i.e., next drydocking or yard period) before imposing operating restrictions.

14. Approved Equipment

Listings of approved navigation light fixtures and sound devices for vessels over 20 meters in length may be obtained from Commandant (CG-ENG). Some approved "white" lights utilize a grayish tint lens to help prevent excess spillover and glare.

K. MARINE SANITATION DEVICES (MSDS)

1. Introduction

Section 312 of the Federal Water Pollution Control Act (FWPCA), as amended (33 U.S.C. 1322), requires marine sanitation devices (MSDs) to prevent the discharge of untreated or inadequately treated sewage into U.S. waters. The FWPCA requires a certified operable MSD on every vessel with an installed toilet. Installed toilets that are not equipped with an MSD, and that discharge raw sewage directly over the side, are illegal. Section 312(g) (2) of the FWPCA directs the Coast Guard to certify MSDs and 33 CFR Part 159 sets out equipment construction and operation requirements. The MSD must be in operable condition to the satisfaction of the Coast Guard boarding officer. A vessel with no installed toilet is not subject to the provisions of section 312 of the FWPCA. MSDs are certified, not approved, for two reasons. First, MSDs are required on all vessels, not only Coast Guard-inspected vessels. Second, MSDs are tested for compliance with the Environmental Protection Agency (EPA) effluent regulations and standards as required by the FWPCA, and do not always meet the Coast Guard marine and electrical engineering regulations of 46 CFR Subchapters F and J. MSD certifications will note whether the MSD is certified for inspected vessels or uninspected vessels.

2. Classification

The Coast Guard recognizes three MSD equipment classes. It is vital to recognize that an MSD type is based on the equipment installation. For example, a malfunctioning flow-through discharge device that has a closed overboard discharge valve is not a no-discharge device, it is a broken machine. The three MSD equipment classes are as follows:

a. Type I. A flow-through discharge device that, under the test conditions described in 33 CFR 159.121, produces effluent having a fecal coliform bacteria count no greater than 1,000/100 milliliters, and no visible floating solids. A Type I MSD is commonly a physical/chemical type (macerator/chlorinator).

b. Type II. A flow-through discharge device that, under the test conditions described in 33 CFR 159.121, produces effluent having a fecal coliform bacteria count no greater than 200/100 milliliters and suspended solids no greater than 150 milligrams/liter. A Type II MSD is commonly a biological (aerobic digestion) plant, but several physical/chemical plants are certified as Type II MSDs.

c. Type III. A device designed to prevent the overboard discharge of treated or untreated sewage, or any waste derived from sewage. Most Type IIIs are holding tanks, but there are also vacuum collection systems, incineration systems, recirculation systems, and a composting system.

3. **Applicability**

Vessels with installed toilets must install an operable, certified MSD, as follows:

a. Vessels 65 ft or less in length. Vessels 65 feet or less in length must have a Type I, II, or III device. Type I MSDs are still permitted on new installations because of a Coast Guard waiver issued by *Federal Register* notice on Monday, 10 July 1978.

b. Vessels over 65 ft in length. Vessels over 65 feet in length must have a Type II or III MSD. Type I MSDs are permitted on these vessels only if--

(1) The construction of the vessel was begun on or after 30 January 1975 and the MSD was installed prior to 31 January 1980; or

(2) The construction of the vessel was begun before 30 January 1975 and the MSD was installed before 31 January 1979. (Extended from 1978 to 1979 because of a Coast Guard waiver issued by *Federal Register* notice on Monday, 28 November 1977).

---

4. U.S. Coast Guard Certification

Certification questions should be directed to Commandant (CG-CVC). All modifications to certified MSDs must be reviewed and accepted by Commandant (CG-CVC). Initial certification is accomplished in accordance with 33 CFR Part 159 by one of three methods:

a. Label certification. MSDs manufactured after 30 January 1976 have been process tested by the Coast Guard and have a label that identifies the certification number (as in "Certification No. 159.15/xxxx/xx/[I, II, III]"). This label will indicate whether the MSD is certified for use aboard inspected or uninspected vessels. Equipment Lists, COMDTINST M16714.3, identifies label-certified devices.

b. As of January 4, 1990, the MSD certification information has been incorporated into the MISLE computer database. This means that new certification numbers had to be assigned in the same format as Coast Guard approval numbers e.g., 159.15/1005/4/II is now 159.015/504/0 and 159.15/1105/4/II is now 159.015/584/0; see Figure 18-1. Model names have not changed and formerly assigned numbers are still acceptable for use.

c. Letter certification (33 CFR 159.12). MSDs made on or before 30 January 1976 were not process tested to the FWPCA requirements. These older plants, and some custom-built systems, may be certified under 33 CFR 159.12(c), by Coast Guard letter to the manufacturer or vessel owner. A copy of the letter should be kept aboard the vessel as evidence of compliance. These MSDs cannot be labeled under 33 CFR 159.15.

FIGURE C2-1: MSD CERTIFICATION NUMBER

CONVERSION SYSTEM

For certification numbers for 159.15 / 1001 / - / - to 159.015 / 1099 / - / - :

Old certification #: 159.15 / 1005 / 4 / II

(delete): : : : : : x x : : : x x

(add): : : : 0 : : : : 0 : 0

New certification #: 159.015 / (0)504 / 0 = 159.015 / 504 / 0

or certification numbers for 159.15 / 1100 / - / - to 159.15 / 1199 / - / - :

Old certification #: 159.15 / 1105 / 4 / I I

(delete): : : : : : x x : : : x x

(add): : : : 0 : : : : 8 0 0

New certification #: 159.015 / (0)584 / 0 = 159.015 / 584 / 0

c. Certification by regulation (33 CFR 159.12a). Type III MSDs that store only sewage and flushwater at ambient air pressure and temperature are certified by definition.

(1) There will be neither a label nor a letter, so the inspector should verify that the installation is as it is claimed.

(2) The tanks should be adequate to retain the wastewater generated while the vessel is within U.S. waters. Gray waters and galley wastes should not be directed to such a system, because the rotting food can cause the tank contents to putrefy, worsening the situation.

(3) The following are not acceptable as a Type III MSD:

(a) The use of piping as a holding tank; or

(b) Securing the direct overboard discharge piping from the head with a valve.

NOTE: Type III systems installed on a vessel before 30 January 1975 are certified under 33 CFR 159.12(b). These devices were not reviewed; no certification letter or label is necessary.

---

5. IMO Certificate of Type Test

A foreign flag vessel that has a "Certificate of Type Test" under MARPOL Annex IV indicating that its sewage treatment plant meets the test requirements of Resolution MEPC.2(VI) of the International Maritime Organization (IMO) will be accepted by the Coast Guard as being in compliance with 33 CFR 159.7(b) or (c). Such a plant will be considered fully equivalent to a Coast Guard certified Type II MSD as long as the unit is in operable condition (NVIC 9-82, CH-1, dated 8 October 1988). U.S. registered vessels will continue to be required to have Coast Guard certified MSDs per 33 CFR Part 159.

---

6. **Pre-construction Technical Review**

a. Label-certified MSD. If the label indicates certification for installation on inspected vessels, no further review of the unit itself is required, but any surge tanks or transfer station components should be examined prior to installation. If the label indicates that the MSD was certified initially for installation aboard uninspected vessels only, it must undergo plan review by the Marine Safety Center (MSC), the office responsible for the plan review of the particular vessel.

b. Capacity of the MSD. The regulations let the manufacturer determine how MSD capacity is stated. As a result, MSD manufacturers have used widely varying per capita sewage estimates in calculating the capacity of their equipment, from 35 liters per day to 35 gallons per day. In a proposed new installation, verify that the unit is large enough, based on hydraulics and waste load, not numbers of people, to process the wastewater expected to be generated on board the vessel. Installing too small an MSD will allow the discharge of partially treated sewage, which violates the FWPCA.

c. Modifications. All modifications to fixed sanitary plumbing or the MSD system must be accepted by the cognizant OCMI.

d. Jurisdiction for review. The vessel owner is responsible for complying with other agencies that may have jurisdiction. The Public Health Service (Interstate Transportation Sanitation Service) also conducts pre-construction reviews on U.S. vessels.

---

7. Inspection of Installed MSDs

Marine Inspectors should accept certified, operable MSDs that meet the requirements of 33 CFR Part 159. Ensure that all MSDs on the vessel are included in the inspection. Large vessels may have several MSDs, both holding tanks and flow-through MSDs. When conducting MSD inspections, the Marine Inspector should do the following:

a. Certification. Verify that a device is certified by checking labels, letters, manuals, etc.

(1) A copy of the certification letter for an existing MSD should be kept on the vessel for review by a boarding officer. This system is imperfect at best.

(2) A foreign flag vessel should keep a copy of the IMO Certificate of Type Test aboard.

(3) If a letter or IMO Certificate of Type Test is not available, contact Commandant (CG-CVC). They may be able to identify the MSD as one that has been letter certified or listed with IMO.

b. Operation of Type I or II MSDs. The Marine Inspector should verify that an MSD is operable.

(1) For flow-through discharge MSDs (Type I or Type II), the Marine Inspector should verify the following:

(a) Instruction manuals are on board and available to the operating crew.

(b) Disinfectant chemicals or other consumable supplies needed to operate the device are stocked on the vessel. Hazardous substances (46 CFR 147) used to process sewage must be labeled and handled as such.

(c) All components are in good operating condition. Some ships may install the treatment tank in a separate compartment from the pumps and aerators, due to space constraints.

(d) Capacity is adequate for the vessel's wastewater load.

(e) The MSD receives only drains that it can handle. MSDs are tested only with sewage. Gray water drained to the plant can displace partially treated sewage.

(f) There are no suspicious accumulations of liquid or leaks around the treatment plant.

(g) Any disinfectant dosing openings are accessible and can be easily opened.

(h) Vents from the MSD do not cross-connect with other vents.

(2) Operation of Type III MSDs. For holding tanks (Type III), the Marine Inspector should verify the following:

(a) Capacity is adequate for the time the vessel will have to retain sewage and flushwater.

(b) The tank is used solely to store sewage and flushwater. In older ships, toilet drains may be combined with deck, sink and shower drains, to help flush the overboard drains. This installation was never intended to store sewage and may not be plumbed to prevent the back-venting of fumes from a holding tank.

(c) The tank does not receive gray waters or galley wastes. Adding these wastes can greatly increase the hazards of putrefied material accumulating in the tank.

(d) The tank operates at ambient pressure. Vacuum collection systems therefore cannot be certified under 46 CFR 159.12(a) and must be submitted for engineering review.

(e) The tank operates at ambient temperature.

(f) Vents from the MSD do not cross-connect with other vents.

(g) The overboard discharge valve ("Y" valve) for the tank is adequately secured to prevent the discharge of raw sewage while the vessel is in U.S. waters.

(3) MSD capacities. Check that the MSD can successfully operate in the installation. These calculations must be used as guidelines, as 33 CFR Part 159 does not mandate capacities. Each MSD should be evaluated in terms of the vessel's size, route, service, and particular circumstances. These capacities consider only "black-water" toilet drains. (On the average, each person will produce 1.5 liters of waste per day.)

(a) Flush rate. Figure C2-2 estimates the water used per flush by different toilet systems.

(b) Wastewater produced. Figure C2-3 estimates the liters of wastewater produced per person per day, based on the plumbing type, and the way the boat operates.

(c) Gray water. Figure C2-4 estimates the liters of "gray water" from galleys, showers, and sinks produced per day, based on the way the boat operates. Gray water discharge is prohibited only in the Great Lakes. Gray water is not sewage and may be discharged overboard without passage through an MSD or a holding tank.

(d) Draining galley wastes into the MSD is not recommended, because food waste is much more difficult to decompose than the human sewage which the marine sanitation device is intended to handle.

(e) If retained, gray water must be included in the waste retention capacity for the vessel.

(f) Operation in excess of certified rating. A flow-through (Type I or II) system may be overloaded. This "short circuits" the MSD and wastewater flows through the unit too quickly to be treated, allowing the direct overboard discharge of untreated sewage through the MSD.

FIGURE C2-2

APPROXIMATE FLUSH CAPACITIES FOR VESSEL TOILETS DRAINING TO MARINE SANITATION DEVICES (MSDS)

System Type	Liters per flush
Conventional (Flushometer)	18.9
Recirculating	0.38
Vacuum	1.1
Hand Pump	1.9
Electric Pump	3.8

FIGURE C2-3

LITERS OF WASTEWATER PER PERSON / PER DAY BASED ON PLUMBING TYPE						
Trip Length	LONG[1]		MEDIUM[2]		SHORT[3]	
User	Crew	Passenger	Crew	Passenger	Crew	Passenger
Plumbing System Type						
• Conventional	96.10	96.10	96.10	31.40	48.10	24.00
• Recirculating	1.90	1.90	1.90	0.64	0.95	0.95
• Vacuum	7.20	7.20	7.20	7.20	3.60	1.90
• Hand Pump	11.00	11.00	11.00	3.80	7.40	2.70
• Electric	20.40	20.40	20.40	6.80	10.20	5.10

Note 1: Crew and passengers aboard 24-hour/day.
Note 2: Crew aboard 24-hour/day; two groups of passengers aboard for 4 hours each (two trips/day), each passenger using facilities once.
Note 3: All crew aboard 12 hr/day; six groups of passengers aboard for 2 hours (six trips per day), one fourth of passengers using facilities once.

FIGURE C2-4

LITERS OF GRAY WATER PER DAY						
Duration	LONG[1]		MEDIUM[2]		SHORT[3]	
User	Crew	Passenger	Crew	Passenger	Crew	Passenger
Gray Water	113.6	113.6	113.6	56.8	11.4	5.7

Note 1: All crew and passengers aboard 24-hour/day.

Note 2: All crew aboard 24-hour/day; two groups of passengers aboard for 4 hours each (two trips per day), each passenger using facilities once.

Note 3: All crew aboard 12 hr/day; six groups of passengers aboard for 2 hours (six trips per day), one fourth of passengers using facilities once.

c. Stability of small passenger vessels. Vessel stability must be considered in MSD installation aboard a small passenger vessel. This is especially important for vessels fitted with holding tanks, which, when partially full, may add significant free-surface effect. The OCMI should ensure that the requirements of Subchapter T are met.

d. Vessel operations.

(1) Time within U.S. waters. An MSD is required while the vessel is within the 3 mile limit.

(a) A Type III MSD can have a through-hull "Y" valve, but it must be opened only when the vessel is beyond U.S. waters. The valve must be adequately secured in all U.S. waters to prevent all discharges of raw sewage.

(b) Use of a padlock, non-releasable wire-tie, or removal of the valve handle would be considered adequate securing of the device. The method chosen must be one that presents a physical barrier to the use of the valve.

(2) No discharge zone. Operation in EPA-designated No Discharge Zones affects the MSD installation on every vessel that enters or stays in those waters.

(a) Flow-through devices are permitted if they are adequately secured to prevent discharges of any sewage, treated or untreated. Closing the seacock and padlocking, using a non-releasable wire-tie, removing the seacock handle would be sufficient means of securing. Locking the door to the head with a padlock or a door handle key lock is another acceptable method of securing the MSD while in a No Discharge Zone.

(b) Type III MSDs are recommended for long-term operation in a No Discharge Zone. Owner/operators should determine whether the intended area of operation is a No Discharge Zone.

(3) Plumbing system leakage. A greater capacity MSD may be necessary to accommodate the water from leaky toilet valves. Fixing the plumbing is often easier.

(4) Effluent sampling. Under the law, it may be necessary to take a sample of the MSD effluent if the Marine Inspector suspects that the MSD is no longer operable. If this is necessary, the Marine Inspector should instruct the vessel owner to have the effluent sample taken by a qualified wastewater laboratory, with the results reported to the Coast Guard

(a) These analysis results may form the basis of an enforcement action resulting in a civil penalty, so only qualified personnel should take, transport, or analyze the MSD effluent.

(b) The Coast Guard can use any wastewater lab that is state-certified.

e. Jurisdiction. The vessel owner/operator is responsible for complying with other agencies that may have jurisdiction. For example, foreign passenger vessels calling at U.S. ports are subject to Coast Guard quarterly control verification boardings. The Public Health Service (Centers for Disease Control) also inspects the sanitation of passenger vessels calling at U.S. ports.

---

8. Precautions for Inspections of MSDs

a. One must exercise confined space entry precautions when working around an open or possibly damaged MSD. If samples must be taken by a boarding officer, the boarding officer should wear disposable gloves to protect from possible contamination from the effluent. One must use “Not Safe for Hot Work” precautions around MSDs and holding tank. Use confined space entry precautions if it is necessary to open a holding tank or MSD. An MSD that has broken while containing sewage can be a hazard to all involved in its repair or inspection. Both methane and hydrogen sulfide can be generated in a treatment plant once aeration is lost.

b. A properly operating aerobic digestion MSD does not have a bad smell. A bad smell indicates that part of the system is leaking or septic.

c. A Marine Inspector examining an MSD should be alert for discolored metal fixtures. Hydrogen sulfide gas will blacken brass or other metal, even where it is seeping from the MSD at extremely low (not lethal) concentrations.

d. Inspectors are not expected to risk their health to check the MSD. If the MSD is too filthy at the time of inspection, get somebody else to clean it up before proceeding with the inspection.

e. Effluent sampling should be done only by personnel who are trained in collecting and handling the water samples. If effluent sampling is advised, inspectors should require the vessel operator to have samples taken by personnel from a qualified water quality laboratory.

---

9. Portable Toilets

a. Introduction. Portable toilets or "porta-potties" use no installed water, power, etc. Portable toilets are not considered installed toilets and are not subject to the MSD regulations.

(1) Portable toilets are subject to disposal regulations which prohibit the disposal of raw sewage within territorial waters (3 mile limit), the Great Lakes, or navigable rivers.

(2) The use of portable toilets combination with a direct discharge toilet will not bring a vessel into compliance. Vessel owners may remove the vessel's installed toilets and use portable toilets instead. If a vessel is fitted with and is using a portable toilet, any fixed toilets aboard that do not comply with 33 CFR Part 159 must be made permanently inoperable.

(3) Only when total removal of the system would be impractical or unsafe may the toilet be rendered "permanently inoperable," meaning that all parts of the toilet are removed (unless removal of a particular part would be impractical or unsafe).

b. Temporary MSDs. The MSD requirement is intended to remove all uncertified toilet installations aboard vessels. This policy must not be construed to permit installation of a spectacle flange on discharge valves, or blanking off of discharge lines on direct discharge toilets. These are temporary means of preventing overboard discharge that do not render the system permanently inoperable. They do not change the installed system, and the reasonable conclusion is that the vessel owner intends to use the uncertified, installed system later.

c. Installation. Portable systems on inspected vessels must meet the following criteria:

(1) The device must be manufactured of a durable material, such as molded plastic, aluminum, etc., that facilitates its removal ashore. Collapsible units with disposable bags are not acceptable, because the bag can tear and release sewage into the vessel or into the water.

(2) The vessel operator must follow the manufacturer's instructions for waste disposal, chemical additives use, etc.

(3) The device must be securely fastened to the vessel with straps, wooden framing, or similar materials.

---

10. Waiver of MSD Requirement

Some unique vessels may be granted a waiver of the MSD requirement. Such waivers are limited and are granted only by Commandant (CG-CVC). Requests for waivers will be considered only on the basis of space or power constraints that prevent the installation of any commercially available MSD. A lack of pump-out facilities in the vessel's immediate area of operation is not sufficient grounds for a waiver, unless the vessel regularly travels outside

U.S. territorial waters, where overboard discharge of raw sewage is permitted. Portable toilets may then be substituted.

L. UNIQUE VESSEL EQUIPMENT AND MATERIALS

1. Introduction

Modern technology and automation are markedly changing shipbuilding practices. Every new vessel contains some novel feature that requires attention at certain intervals after the initial certification. Such items include--

a. Reheat boilers;

b. High expansion foam systems;

c. Carbon monoxide analyzers;

d. Special steels; and

e. Certain automated systems.

This situation is also true for existing vessels that have been rebuilt, converted, or modernized to a limited extent by periodic alterations. The inspector must have access to the information concerning such features, as well as proper inspection and testing data.

2. Records

A description of any unique equipment or materials must be listed in MISLE. For each piece of equipment or material, an appropriate entry should indicate where information on proper inspection and testing procedures is located. The entries must be made when the equipment is installed, on the occasion of a new vessel's initial inspection for certification, or whenever necessary.

M. POWER-DRIVEN FASTENERS

1. Introduction

Power-driven fasteners are frequently used aboard commercial vessels to attach nonstructural items such as cables, cable trays, electrical fixtures, and pipe hangers to stiffeners, beams, frames, and nontight structural bulkheads. Power-driven fasteners are, basically, small-arms projectiles with stud threads on one end. These projectiles are shot into steel members to provide mountings similar to welded studs. Since they pierce the steel members, power-driven fasteners may lead to crack-initiation sites, areas of localized corrosion, or sources of leaks. The possibility of loosening the fastener also exists, since the bond between the fastener and the structure is mechanical, not cohesive. Power-driven fasteners must not be used in areas that are sensitive to stress patterns or corrosion. The only practical way to control their use is to grant specific approval for their use on a case-by-case basis. This is best done when construction plans for new vessels, or revised plans for existing vessels, are submitted for approval. When used, power-driven fasteners must be attached at least 1 inch from the edge of any member.

2. Acceptable Uses (Subject to Approval)

a. The following are acceptable possible uses of power-driven fasteners within machinery spaces:

(1) On main girder webs, other than primary longitudinals.

(2) On webs of watertight bulkhead primary stiffeners.

(3) On flanges and webs of beams on flats.

(4) On pillars.

(5) On plating on flats.

b. The following are acceptable possible uses of power-driven fasteners outside machinery spaces:

(1) On nontight bulkheads.

(2) On decks other than weather decks.

3. **Unacceptable Uses**

The following are unacceptable possible uses of power-driven fasteners:

a. Inside shells.

b. In strength decks or primary stiffeners.

c. In tank tops.

d. In tight bulkheads (W.T., O.T., etc.).

e. In flanges of primary structural members.

f. In any weather location.

g. In webs of primary longitudinals.

h. In pipe hangers for systems where thermal stresses are significant and hanger placement is important (e.g., high temperature).

i. In any member in which failure would create a personnel hazard, such as a handrail or ladder.

j. On members less than 0.25 inches thick.

k. On members whose operating temperature is normally below 1C.

l. On materials other than mild steel.

m. As grounding devices.

n. To fabricate composite beams.

CHAPTER 3: FACTORY AND SHOP INSPECTIONS OF EQUIPMENT AND MATERIALS

A. INTRODUCTION

This chapter contains guidance relative to factory and shop inspections of equipment and materials required to be used on merchant vessels. These instructions implement the requirements of 46 CFR Part 159. Most factory and shop inspections are now conducted by independent laboratories, so assignment of inspectors on a continuing basis is unnecessary. However, Coast Guard inspectors should periodically visit manufacturers. Manufacturers of approved equipment must grant access to inspectors as a condition of approval.

B. SERVICING OF LIFERAFTS

1. Carpeting in Service Facilities

Liferaft service facilities should be advised against the use of carpeting in their service areas. Carpeting absorbs moisture from the rafts, and is extremely difficult to dry out and disinfect. Fungi that attack rubber-coated fabric rafts may breed in carpeting and damage rafts that are serviced later. Also, carpeting can develop brass fitting contamination, known as "copper oxidation." Although neoprene-coated rafts are not affected by this oxidation, rubber-coated fabric rafts and their metal fittings will be contaminated and deteriorate rapidly. Also, carpeting can lodge small splinters and bits of metal that can puncture and damage rafts.

2. Facilities that Service Foreign Rafts

The Commandant has received numerous requests to inspect U.S. facilities that service foreign rafts. Such requests may be honored by the Officer in Charge, Marine Inspection (OCMI), provided that the following are true:

a. The facility operators agree to abide by the provisions of 46 CFR 160.051-6 (except for the stamping provisions of 46 CFR 160.051-6(e), which do not apply) and the Annex to the International Maritime Organization (IMO) Resolution A.333(IX). Upon such agreement, the facility's activities must be spot-checked. Annual reviews must be made of all such facilities within the OCMI's zone.

b. The facility must obtain written authorization from raft manufacturers for servicing their products, and must agree to have the items indicated in Paragraph 1(n) of the IMO Annex.

c. The facility must maintain servicing records for review by the Coast Guard. It must also provide to Commandant (CG-CVC) an annual summary of deficiencies found on the rafts that were serviced. This survey will allow the Commandant to comply with the requirements of Paragraph 3 of the Annex to the IMO Resolution A.333(IX).

---

3. Letters of Acceptance

At the completion of a satisfactory evaluation, the OCMI will issue a letter of acceptance to the servicing facility and forward a copy to Commandant (CG-CVC). The Commandant, in turn, will list the facility in Equipment Lists, COMDTINST M16714.3 (series) and notify the home Administrations of raft manufacturers that the particular facility has been accepted. Notices of withdrawal will follow the same procedure. The Annex to IMO Resolution A.333(IX) is reprinted in Figure C3-1.

---

4. Liferaft Hydrostatic Release Testing

It is not necessary for a Marine Inspector to attend every liferaft servicing. Accordingly, Marine Inspectors need only witness the testing, and stamp the inspection tag, of hydrostatic release units that are tested concurrently with a “spot check” liferaft servicing attended by an inspector. For testing of those hydrostatic release units not witnessed by a Marine Inspector, the facility performing the test will stamp its three-digit facility identification code in lieu of the IMO identification letters and “USCG” (46 CFR 160.62). Facility codes may be found on all recent liferaft servicing approval letters and in Equipment List, COMDTINST M16714.3 (series).

---

5. Liferaft Inflation Systems

a. Servicing of approved inflatable liferafts. Approved inflatable liferafts must have their inflation systems tested for compliance with 46 CFR 160.151).

b. These regulations require inflation systems to meet time and temperature range limitations.

c. The method presently used for compliance is pre-charging the Carbon Dioxide (CO^2) inflation cylinder with nitrogen gas to an approximate 10-percent volume. The nitrogen is relatively unaffected by external temperature changes, and acts as a catalyst to release the CO^2.

d. Coast Guard-approved service facilities must follow the manufacturer's service procedures to pre-charge cylinders.

e. The use of nitrogen to meet this requirement is the industry's standard technique; other methods may be used upon Coast Guard acceptance.

f. Servicing of non-approved liferafts. Uninspected vessels may be equipped with non-approved rafts or rafts that are not serviced at approved facilities. These rafts may not have received a temperature compensation pre-charge at the last servicing. This may result in under inflation or non-inflation when the raft is put into use.

C. PERSONAL FLOTATION DEVICES (PFDS)

1. Introduction

Life preservers, buoyant vests, cushions, and other personal flotation devices PFDs (Type I, II, III, IV, and V) are manufactured in accordance with:

PFD TYPE	CFR APPROVAL CITATION
Type I	46 CFR 160.002, 160.005, 160.055
Type II	46 CFR 160.047, 160.052, 160.060
Type III	46 CFR 160.064
Type IV	46 CFR 160.048, 160.049, 160.050
Type V	46 CFR 160.053, 160.077

There are some exceptions to type designations. These specifications place an explicit obligation on a manufacturer to inspect all PFDs. Such inspections are intended to maintain the high quality of such products.

---

2. **Life Preservers and Ring Buoys**

a. Type I devices. As of 1 September 1983, the Coast Guard discontinued regular factory inspections of these devices. Regular inspections are conducted by independent testing laboratories such as Underwriters Laboratories, Inc. (UL) and Pittsburgh Testing, Inc.

(1) The laboratory inspectors who perform this task are responsible for ensuring that the device meets all applicable specifications and approved plans, and that the manufacturer is performing sufficient tests and has an adequate quality control program.

(2) It is the laboratory inspector's responsibility to carry out the procedures in 46 CFR Subchapter Q and the "Guide for Independent Organization Inspection of Type I and Type V PFD's Under Subparts 160.002 and 160.055." This guide was prepared by Commandant (CG-CVC) and first issued on 5 August 1983. These procedures help ensure that a manufacturer's devices meet the applicable requirements before they are accepted and marked.

b. Type IV devices. For Type IV ring buoys approved under 46 CFR 160.050, inspections are also performed by independent laboratories as of 1 September 1983. The laboratory inspector is responsible for conducting the procedures required by Subchapter Q.

c. Coast Guard oversight. Unannounced Coast Guard inspections should be made at the place of manufacture to ensure that both the manufacturer's quality control and testing laboratory's inspection program are adequate.

(1) Such unannounced inspections must be conducted whenever a new approval is granted, and at least quarterly. Additional inspections should be conducted when problems have been discovered during the previous inspection or when the OCMI is notified of problems in the field.

(2) When discrepancies are found, immediate action must be taken to correct them. A report should be submitted to Commandant (CG-CVC) noting discrepancies found, corrective actions taken, and recommendations for further action, as

appropriate. Communication between the OCMI and the local laboratory inspector(s) will help ensure compliance by the manufacturers.

FIGURE C3-1: IMO RESOLUTION A.693(17) ADOPTED ON 06 NOVEMBER 1991 ANNEX - RECOMMENDATION ON THE CONDITIONS FOR THE APPROVAL OF SERVICING STATIONS FOR INFLATABLE LIFERAFTS

1. Administrations should ensure that periodic survey of inflatable life rafts is performed at servicing stations that have demonstrated competence to service and re-pack rafts, maintain an adequate facility and use only properly trained personnel. Servicing stations, which should have demonstrated this capability for inflatable life rafts of each manufacturer whose rafts they service, should comply with the following:

    a. Servicing of inflatable life rafts should be carried out in fully enclosed spaces only. There should be ample room for the number of inflatable life rafts expected to be serviced at any one time; the ceiling should be sufficiently high to overturn, when inflated, the largest life raft to be serviced.

    b. The floor surface should be provided with an easily cleaned coating, sufficiently smooth to ensure that no damage will occur to the life raft fabric.

    c. The servicing space should be well lit provided that direct rays of sunlight do not enter the space.

    d. The temperature and, when necessary, the relative humidity in the servicing space should be sufficiently controlled to ensure that servicing can be effectively carried out.

    e. The servicing space should be efficiently ventilated, but be free from draughts.

    f. Separate areas or rooms should be provided for:

        1. Life rafts awaiting servicing, repair or delivery.

        2. The repair of glass fibre containers and painting CO^2 cylinders.

        3. Materials or spare parts.

        4. Administrative purposes.

    g. Means should be provided in the life raft storage space to ensure that life rafts in containers or valises are not stored in more than two tiers or subjected to excessive loads.

h. Spare and obsolete pyrotechnics should be stored in an approved, safe and secure magazine well away from the servicing and stowage spaces.

i. Smoking should not be allowed in the servicing and packing areas.

j. Sufficient tools should be available for the servicing of life rafts and release gear in accordance with the requirements of the manufacturer, including.

1. Manometers or pressure gauges and thermometers which can be easily read with sufficient accuracy.

2. Dual purpose air pump(s) for inflating and deflating life rafts, together with the necessary high pressure hoses and adaptors.

3. A suitable pair of scales for weighing CO^2 cylinders with sufficient accuracy.

4. Sufficient gas for blowing through the inlet system of the life rafts;

k. Procedures and arrangements should be made to ensure that a gas cylinder is properly filled and gas-tight before fitting to a life raft.

l. Sufficient materials and accessories should be available for repairing life rafts together with replacements of the emergency equipment; when servicing davit-launched life rafts adequate means should be provided for overload testing of such life rafts.

m. Servicing and repair work should only be carried out by qualified persons who have been adequately trained to the satisfaction of the Administration. The training procedure should ensure that servicing personnel are made aware of changes and new techniques.

n. Arrangements should be made with the manufacturer to make available.

1. Changes to servicing manuals, servicing bulletins and instructions.

2. Proper materials and replacement parts.

3. Bulletins or instructions from the Administration.

d. Factory inspections. Inspectors making factory visits must ensure that the PFDs produced comply with the specifications for materials, construction, buoyancy, and workmanship. The independent inspection organization guides referenced above should be followed. In all cases, the inspector must do the following:

1. Examine the manufacturer's records of production lot buoyancy tests.

2. Examine all materials used in PFD construction. The manufacturer must show compliance through material affidavits, certified test reports, or tests made in the presence of the inspector.

3. Examine the component parts and finished items for compliance with applicable drawings, product description, etc.

4. Examine the markings for proper wording, lot numbers, approval numbers, etc., and test the marking for waterproofness and legibility.

5. Test the strength and slippage of a body strap assembly. The test must be run at the load specified in the appropriate subpart and must last for 10 minutes, in which time no more than 3 inches of slippage is permitted (1 inch for Type I devices).

6. Test the buoyancy of pad inserts. If kapok-filled pad inserts fail the buoyancy test, the buoyancy test for processed kapok under 46 CFR 164.003 must also be made.

7. Test the volume displacement of vinyl-covered pad inserts.

8. Test the seam strength of heat sealed, vinyl-covered pad inserts.

9. Check the manufacturer's test equipment for calibration within the previous 6 months.

10. Compare test results with the records of manufacturer tests for correlation.

---

3. Work Vests

These devices are manufactured in accordance with the requirements of 46 CFR 160.053, which does not require regular factory inspections by the Coast Guard. The OCMI should, however, conduct unannounced inspections at least quarterly, as described above, for manufacturers of work vests in his or her zone.

4. Buoyant Vests, Cushions, and Marine Buoyant Devices

For Type II, III, and IV cushions and some special Type V's, factory inspections are conducted by a recognized laboratory such as UL. However, 46 CFR Subchapter Q specifications provide that unannounced Coast Guard inspections may be made at the place of manufacture at any time. Further, it is the Coast Guard's responsibility to ensure that the testing laboratory's inspection program is adequate. Through at least annual unannounced inspections, OCMIs must ensure that adequate quality control exists at PFD manufacturers' facilities. When discrepancies are found, immediate action must be taken to correct them. A report should be submitted to Commandant (CG-CVC) noting the discrepancies found, corrective actions taken, and recommendations for further action, as appropriate.

D. IDENTIFICATION AND CERTIFICATION OF ENGINEERING MATERIALS

Under 46 CFR 50.25-1, certain products (e.g., plating, stay bolts, and valves) must be certified by the manufacturer. 46 CFR Table 50.25-1(a) outlines identification and certification requirements for engineering materials. As outlined in 46 CFR 50.15-5 and 50.15-15, certain American Society of Marine Engineers (ASME) and American Society for Testing Materials (ASTM) specifications are adopted for Coast Guard use. Those products listed in 46 CFR Table 50.25-1(a) should be stamped in accordance with the applicable specifications and accompanied by the manufacturer's certification. They may, however, be accepted without such certification, as indicated in 46 CFR 50.25-5. In all cases, the inspector must be satisfied that material presented by the fabricator or repair facility matches that identified in the mill or manufacturer's certificate.

E. BOILERS AND UNFIRED PRESSURE VESSELS

1. Pressure Vessel Markings

Certain ASME certified Pressure Vessels (PVs) are accepted by the Coast Guard without Coast Guard shop inspection. However, stamping with the Coast Guard symbol in accordance with 46 CFR 50.10-25, 54.10-3, and 54.10-20 is required for all PVs that meet 46 CFR 54.01-5(c)(3), other than those excepted by 46 CFR.54.01-5(c)(4) and 46 CFR 54.01-15(a)(1), (2), (3), and (5). No Sector Office identification letters or serial numbers are required for PVs unless the Coast Guard conducts the shop inspections. The manufacturer's name and serial number provide sufficient identification for these units.

---

2. Data Reports

Since the Coast Guard requirements applicable to PVs found in 46 CFR Table 54.01-5(b) are in excess of the minimum requirements of the ASME Code, it must not be assumed that ASME authorized-inspectors will assure that they have been met. Accordingly, to ensure these additional requirements are met, Marine Inspectors must review the manufacturer's Data Reports. The Coast Guard symbol stamped on the PV indicates that a Marine Inspector reviewed the Data Reports and that the PV meets Coast Guard regulations.

---

3. Shop Inspections

Complete marking with the Coast Guard symbol and serial number is required for all PVs receiving Coast Guard shop inspection whether or not an ASME stamp is applied. This marking will be applied by the Marine Inspector performing the shop inspection. When conducting a shop inspection of a PV, the Coast Guard Marine Inspector will also sign the Data Reports to indicate compliance with Coast Guard regulations.

> **NOTE:** See MSM Volume II, COMDTINST M16000.7A (series), Chapter A4 for additional information on boiler plan submittal.

F. MARINE SANITATION DEVICES (MSDS)

PV components of these devices are generally exempt from shop inspection and plan approval requirements via 46 CFR 54.01-15(a)(1). Though not generally inspected as PVs, these units are subject to the requirements of 33 CFR Part 159.

G. OILY-WATER SEPARATORS

Oily-water separators are nonstandard fluid conditioner fittings. As such, they are not subject to the 46 CFR 56.15-1(e) requirements for shop inspection and stamping Though not inspected as PVs, such units are subject to the requirements of 46 CFR 162.050.

H. LIFERAFT INFLATION SYSTEMS

1. Servicing of Approved Inflatable Liferafts

Approved inflatable liferafts must have their inflation systems tested for compliance with 46 CFR 160.051-5(c)(4) and (e)(11) (see NVIC 2-75). These regulations require inflation systems to meet time and temperature range limitations.

The method presently used for compliance is pre-charging the Carbon Dioxide (CO^2) inflation cylinder with nitrogen gas to an approximate 10-percent volume. The nitrogen is relatively unaffected by external temperature changes, and acts as a catalyst to release the CO^2. Coast Guard approved service facilities must follow the manufacturer's service procedures to pre-charge cylinders. The use of nitrogen to meet this requirement is the industry’s standard technique; other methods may be used upon Coast Guard acceptance.

2. Servicing of Non-Approved Liferafts

Uninspected vessels may be equipped with non-approved rafts or rafts that are not serviced at approved facilities. These rafts may not have received a temperature-compensation pre-charge at the last servicing. This may result in under inflation or non-inflation when the raft is put into use.

CHAPTER 4: INSPECTION OF STEERING SYSTEMS

A. INTRODUCTION

Proper and reliable operation of a vessel's steering gear is vital to the safety of the ship, its personnel, and the marine environment. The inspection of steering systems must be thoroughly and intelligently performed. Prior to any testing, the inspector should become familiar with the equipment and its operation. A review of the manufacturer's instruction manual may be necessary. The inspector should then carefully inspect and witness the testing of all equipment, controls, and alarms, remaining alert for signs of equipment failure, improper operation, defective equipment, or potentially hazardous conditions. The chief engineer and master should be interviewed concerning overall operation and reliability of the steering system. Attention should be given to steering operations and tests during review of the official logbook. A thorough knowledge of steering gear standards and their development is important to assess where to place inspection emphasis. For this reason, information on standards development, a list of references, and some vessel casualty and steering regulation history, are included in this section.

B. INSPECTION PROCEDURES

1. General

Prior to conducting operational tests of the steering system, the Marine Inspector should inspect it as described below. The general objective is to closely examine all electrical, mechanical, and hydraulic connections and linkages of the main and auxiliary steering systems. The inspector should do the following:

a. Sound the mounting bolts of all equipment.

b. Check all piping systems and attachments, equipment-securing brackets, protective guards, wire runs and cages, and other items prone to corrosion or vibration fatigue.

c. Inspect control linkages, linkage pins, and ram guides for wear.

d. Identify and closely examine feedback devices, differential units, or other components that may represent potential single-point failures (i.e., the weakest link). Refer to the steering system design philosophy and requirements in F of this chapter to help identify sections not required to be duplicated.

e. Ensure that all vital connections, pins, couplings, and control linkages have securing devices, such as cotter pins or double-nut locking arrangements, to prevent loosening from heavy vibration. Hydraulic transfer valves, such as a six-way valve, should lock

in each position. Padlocks or other securing arrangements needing special keys or tools are not authorized.

f. Check emergency steering procedures and steering transfer diagrams for clarity and proper labeling of valves.

g. Check that the steering procedures and steering transfer diagrams accurately reflect actual conditions in the steering gear room and wheelhouse, respectively. Wheelhouse procedures should accurately reflect equipment/control actions required to change over to alternative or emergency steering).

h. Inspect carrier bearing or equivalent and rudder stock packing.

i. Inspect steering gear room for watertight integrity, cargo stowage, fire hazards, ventilation, missile hazards, or other hazardous conditions.

---

2. Electrical Equipment

With all power sources secured at the main and emergency distribution switchboards, the inspector should inspect all steering motor starters and switchgear in accordance with the appropriate provisions of 46 CFR 110.30 and Part 111. The inspector should be particularly alert for loose wiring connections, loose equipment mounting screws, frayed or broken control wiring (especially in way of door hinges), and dirt or debris. Mechanical operation of start/stop and transfer switches should be free and smooth. All switches and circuit breakers should be exercised during the inspection. Electrical securing devices such as lugs, strain relief crimp connections, edge connectors, and terminal boards are prone to vibration and corrosion problems and should be closely examined. All connections, insulators, and switching devices should be secure and clean to prevent arcing or insulation breakdown. Excess spare fuses may indicate past problems with overloaded circuits.

---

3. Pumps and Motors

The inspector should hand-rotate each motor and pump assembly and stay alert for unusual noise, binding, or a feeling of roughness during rotation. The inspector should examine couplings for excessive play and evidence of grease slinging. Grease on the overhead near a coupling may be a sign of coupling wear or excessive lubrication. The inspector should check motor ventilation openings for cleanliness.

---

4. Hydraulics

The inspector must carefully check all hydraulic hoses and connections. The inspector must check hydraulic oil for proper level, alarms, cleanliness, and signs of emulsion. On dual-power systems, interconnections or fittings that may fail and cause both systems to lose oil should be checked and noted. The inspector should be alert for signs of oil leakage or evidence of cleanup that occurred just prior to inspection. Evidence of metal in strainers or filters may indicate imminent failure.

---

5. Control Linkages

Mechanical linkages between the rudder differential and pumps are not subjected to high loads, so strength is not a problem. However, repeated bi-directional movements, combined with vibration, can cause loosening of connections. All of these connections are generally in the open and readily visible for inspection. Because these linkages are critical to the operation of the steering system, inspectors should be particularly careful during control linkage examinations. The ship's crew should also inspect all connections on a routine basis.

---

6. Differential Control Units

The function of the differential unit is to compare the helm order with the rudder position and produce an output to control the hydraulic pump. Because of the vital nature of this system, which is composed of many moving parts and connections, emphasis should be placed on this unit during an inspection.

---

7. Relief Valves

Relief valves are used to limit hydraulic pressures under severe loading conditions, such as those encountered during heavy weather. Vessels employ two basic types of relief valves, a balanced piston or a check-valve or spring-loaded type. The balanced piston is used for high pressures. Check-valve types are used for applications such as filter bypasses, in which lower differential pressures are expected. These valves are not subjected to frequent cycling under normal service, and a common problem is freezing of the piston in the closed position. Preventive maintenance should include proper hydraulic filtration and periodic valve cycling. The manufacturer's data book should be consulted for recommended relief valve testing and setting.

---

8. Piping and Fittings

The inspector should examine hydraulic pipes and fittings for condition, proper support, and alignment. Fittings should be closely examined for leaks and evidence of overtightening. Socket welded fittings are generally preferred in areas of high vibration. High-pressure piping is generally made from Schedule 80 seamless carbon steel and should be adequately supported. Tubing applications should be limited to minor services where exposure to rough handling is not a problem. Hoses with abrasions, kinks, twists, or soft spots should be replaced.

---

9. Securing Devices

Securing devices that are most seriously affected by vibration are keys, set screws, and pins. Rollpins, grooved straight pins, or similar securing devices should be used in heavy vibration areas. Lockwire may be used in lighter duty areas.

a. Rollpins provide good resistance to loosening from vibration because the rollpin is pressed into place and exerts a spring force to keep it in. Rollpins are often used to attach a gear to a shaft when strength is not a problem.

b. Keys provide more strength than rollpins and are excellent for transmitting torque. Keys are held in place by friction and should not be relied on for maintaining axial position. Vibration can back keys out even when they have been tightly fitted.

c. Woodruff keys are not as satisfactory as straight pins although they offer more resistance to tipping. These keys require a tight fit to the hub, which makes them more prone to backing out than straight pins.

d. Set screws may be used as a type of key and retainer. This arrangement may not hold up well to reverse loadings. Set screws are also used to better hold key arrangements.

   (1) To better secure set screws, staking is often used for light loads.

   (2) Staking must be done when the piece is assembled.

   (3) Minor repairs to parts utilizing staked set screws may result in a missing or improper stake and subsequent failure of the securing device.

e. Cotter pins provide a means of further retaining a bolt, pin, or other securing device. The pins must be properly bent (180 degrees) and secured to prevent failure or backing out.

f. Tapered pins of any kind are generally not accepted in steering systems.

g. Nuts are prone to backing off during vibration and should be used with additional retaining devices such as special lock washers, keys, pins, or double-nut arrangements.

C. OPERATIONAL TESTS

1. General Tests

The objective of operationally testing the steering system is to thoroughly test all steering systems in all modes of operation from all control locations. This is best accomplished with one inspector on the bridge and another in the steering gear room. The inspectors must do the following:

a. Verify that the system operates to design and regulation requirements.

b. Ensure that operating instructions are properly posted and accurate. Steering system controls and changeover procedures may be distinctive for the wheelhouse and steering gear room.

c. Be alert for vibration, oil leakage, abnormal hydraulic pressures, and unusual noise during operation of the steering apparatus. "Hunting" and erratic or jerky movements of the rudder, follow-up system, or synchro-repeater system may indicate control or feedback problems.

d. Check for normal operation under load, with special attention to overheating of the operating motor and pump assembly, if underway.

e. Test all alternate systems, alarms and indicators under simulated casualty conditions such as tripping the main steering power breaker.

2. Pumps, Motors, and Controls

The inspectors must do the following:

a. Energize the steering pumps and motors and test the operation of each motor and pump assembly, using both port and starboard control cables.

b. Operate each motor and pump assembly from the bridge, the alternative control station, and the steering gear room through the full range of rudder travel.

c. Operate each motor and pump assembly on the normal, alternate, and emergency power supplies, checking for the proper operation of the manual feeder transfer switch and automatic bus transfers during this procedure.

---

3. Auxiliary Steering

Auxiliary steering arrangements should be thoroughly tested by simulating a main steering or power failure. Steering control and power should be readily switched to the auxiliary system.

---

4. Rudder Angle Indicators/ Feedback

The inspectors must verify that the rudder angle repeaters on the bridge, alternative control station, and steering gear room are in alignment with each other and with the mechanical rudder angle indicator. Visibility from the steering station and night lights should also be checked.

---

5. Alarms and Indicators

The inspectors should verify that all required indicating lights, alarms, and emergency lighting in the pilothouse, machinery space, and in the steering gear room operate properly. See I of this chapter for more information.

---

6. Communications

The inspectors should test for proper operation of all voice communication systems between the bridge, alternative control, and steering gear room.

---

7. Regulatory Compliance

Particular attention to detail is required during inspection of new installations, modifications, and major repairs to verify compliance with all steering gear standards and regulations. See F and G of this chapter for more information. Some compliance tests, such as overloads or maximum design limits, may not be feasible or safe. Early communications between the Officer in Charge, Marine Inspection (OCMI), vessel owner, equipment manufacturer, and contractor, concerning testing requirements and alternatives are encouraged.

D. INSPECTION RECORDS

At the completion of a steering gear inspection, a detailed description of the tests and inspections performed should be included in the appropriate MISLE activity. If the inspection was split between hull and machinery inspectors, the hull inspector should summarize the entire inspection. The following are examples.

1. All Vessels Except Small Passenger Vessels

All accessible electrical, mechanical, and hydraulic connections and linkages in the steering gear room were examined by the boiler inspector and found satisfactory. Tested the main and auxiliary steering systems and associated alarms in all modes of operation from all control locations. Checked rudder angle indicators. All inspections and tests satisfactory. Interview of the chief engineer and master and review of the vessel's logbook indicate past reliable operation of all steering systems.

2. Small Passenger Vessels

For rod-to-gear and chain assembly systems, examined the entire system while exercising the helm. All couplings, sprockets, and chains should be aligned, well lubricated, and operate freely. Securing devices and connections should be well maintained. Rudder post, packing. and tillers should be examined for excessive wear and leakage. Operational tests of the bridge and flying bridge steering stations should be conducted. The emergency tiller should be readily accessible and operationally tested during the inspection.

E. CONSIDERATIONS FOR SPECIFIC STEERING SYSTEMS

1. Ram Systems

These generally consist of single or paired double-acting hydraulic rams, connected to the tiller by a link or Rapson Slide mechanism.

a. Link systems use connecting rods or linkages from the ram to the rudder post. They are common in dual-rudder arrangements and installations with less space surrounding the rudder post.

b. The Rapson Slide unit is a common ram arrangement consisting of a block, sleeve or trunnion block pivoted on a ram that is guided by a cross-head or yoke fitted to the rudder stock. An advantage of this arrangement is that as the rudder angle increases, the ram's mechanical advantage increases.

---

2. Rotary Vane Systems

A rotary vane-type system consists of a vane actuator connected directly to the rudder stock. The power and control of a rotary vane-type steering gear is similar to hydraulic ram systems, but this system operates at lower pressures and has fewer moving parts than a ram system. Rotary-vane systems have proven to be as reliable as ram systems. Single actuator systems may be considered equivalent to the required dual apparatus with many of the same provisions as hydraulic rams. Preventive maintenance and routine inspections of the hydraulic system and strainers are especially important to rotary vane systems. On one notable occasion, a serious failure was prevented when metallic slag was found in the hydraulic system strainers. In this incident, sheared vane bolts had scored the pump cylinder walls. Investigation revealed that the bolts had sheared due to stresses at a notch created by tapered bolt heads fitted into unchambered bolt sockets.

---

3. Orbitrol Systems

Orbitrol steering systems are a type of hydraulic helm unit that may be found on Offshore Supply Vessels (OSVs) and small passenger vessels. This system has been accepted for cargo vessels of less than 500 GT, under certain conditions, if the vessel is capable of steering with its screws. Deck winch motors may also run off the Orbitrol system, if specifically approved, on vessels of less than 100 GT. All of an Orbitrol system’s auxiliary hydraulic motors should be running simultaneously when the system is undergoing testing.

---

4. Systems Aboard Small Passenger Vessels

Problems with small passenger vessel steering systems are frequently caused by a lack of maintenance, corrosion, or the loss of fasteners due to wear and vibration. The inspector should inspect the entire steering system visually, from behind the operator's console to the rudder post. The system should be exercised during the inspection to ensure that all pulleys, sprockets, cables, guides, etc., are free, well lubricated, and properly aligned. All linkages, pins, and fasteners should have locking devices. Steering system components that are not easily accessible may present potential failure points and should be carefully evaluated. The removal of protective guards, coverings, or other interferences may be necessary to inspect the system completely.

5. Auxiliary Steering Systems

Auxiliary steering and communication systems should be tested as outlined on posted directions. The inspector should check all labels and markings for compliance with the posted instructions. A deck winch to block and tackle arrangement need not be physically exercised, but all required equipment should be inventoried and examined. Trick wheel arrangements are easily tested and should be fully exercised. Hand pumps should be tested in both directions but need not be run through the entire rudder range. Auxiliary hand tiller arrangements should be checked for easy access, fit, and capacity.

---

6. Integrated Steering/ Propulsion Systems

Such systems maneuver a vessel solely by changes to propulsion settings and do not use a rudder. Two examples are cycloidal propellers (a Voith system), and the Z-drive/Z-peller. Such systems provide a full, 360-degree propulsion thrust output, which is especially advantageous on dredges, ferries, and towboats. The same essential design philosophy and inspection criteria apply to these systems as to other steering systems. The inspector should consult the manufacturer's data book and plan approval letters to become familiar with the system.

F. STEERING GEAR STANDARDS AND DESIGN PHILOSOPHY

---

1. Coast Guard Regulations

For vessels built after 1 June 1982, the Coast Guard's standards apply a philosophy of duplication and separation to steering gear design standards so that, in the event of a casualty, a backup unit or operating position is available. The list below summarizes the duplication requirements in 46 CFR Subchapters F and J.

a. Steering apparatus. The Coast Guard requires a vessel to have a main and auxiliary steering gear. However, a more common arrangement on larger vessels uses a dual-power system that has been accepted as equivalent to the separate auxiliary steering gear.

b. Acceptable substitutions. Dual-powered hydraulic systems are an acceptable substitute for the auxiliary steering gear requirement, provided each power unit meets the capacity of the main steering gear. A dual-power hydraulic steering system is comprised of the following:

(1) Two cylinders or actuator chambers.

(2) Two independent pumps with independent piping to the cylinders.

(3) Cross-connects may be provided, in which case valving must be provided to allow any pump/cylinder combination.

(4) Separate power leads to the pump prime movers for the source of power. Separate feeder circuits are required for electrohydraulic steering gears.

(5) Each independent steering power unit has the required power to meet the rudder movement requirements of 46 CFR 58.25-10 (a).

(6) An independent control system for each hydraulic power unit.

(7) Two reservoirs, each of sufficient capacity. Cascade overflow types are acceptable, provided each half has sufficient capacity.

c. Steering station. Two stations are required for controlling the main steering gear: one in the pilothouse and the other on the after weather deck, unless duplicate controls are provided to the pilothouse. Generally, duplicate controls are provided and the alternative steering station is in the steering gear room.

(1) Steering gear control systems. A steering control system is defined as all equipment by which helm orders are transmitted from the bridge to the steering gear power units. The 1 June 1982 revision of Subchapter I has expanded this definition to include transmitters, receivers, feedback devices, differential units, hydraulic control pumps and all associated motors, cables, shafting, and piping for steering gear control.

(2) Separate and independent control systems. Two separate and independent control systems are required: one in the pilothouse, the other at the alternative steering station.

(a) Control systems external to the steering gear compartment must be duplicated.

(b) For vessels constructed prior to 31 May 1982, some essential control system elements, such as feedback devices and differential control units, may not be duplicated.

(3) Steering gear feeder circuits. One feeder circuit must be from the ship's service switchboard. The other circuit must generally be fed from the emergency or alternative power source. The circuits must be separated as widely as possible from one another.

---

2. International Standards

The international standards for steering gear are set forth in the International Convention for the Safety of Life at Sea (SOLAS). Historically, standards have been more specific and detailed for passenger ships than for cargo ships (including tankers). SOLAS 48 requirements in Chapter II, Part F, Regulation 56 only applied to passenger ships. SOLAS 60, Chapter II, Regulation 29 had some requirements for cargo vessels but continued to concentrate on passenger ships. The 1978 Protocol to the 1974 Convention removed the distinction between passenger and cargo ships and placed additional steering gear requirements on tankers.

The first amendments to SOLAS 74/78 have further improved steering standards for all vessels. However, the problems of common systems still exist and should be recognized during vessel inspections.

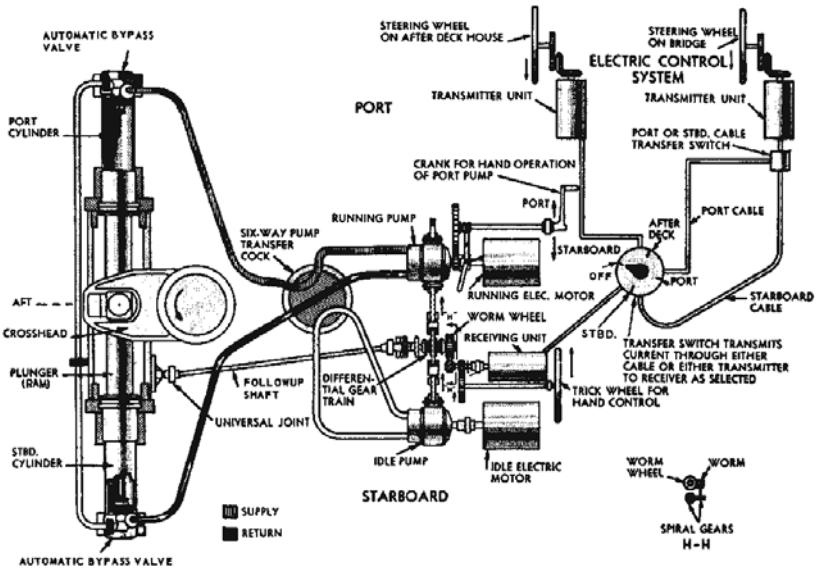

Single-ram electrohydraulic steering gear.

G. STANDARDS AND REFERENCES

1. 46 CFR Subchapter F Marine Engineering

Marine engineering requirements have not appreciably changed since 1963, when the concept of a steering station located on the after weather deck was permitted to be replaced by an alternative steering station with duplicated pilothouse controls. These requirements can be found at the citations in the table below.

SYSTEM COMPONENT	CFR CITATION
Piping	46 CFR Part 56
Steering gear requirements	46 CFR 58.25
Special steering apparatus (such as cycloidal propellers)	46 CFR 58.25-65
Steering gear periodic tests	46 CFR 61.20-1
Fluid control testing	46 CFR 61.20-3

2. 46 CFR, Subchapter H Passenger Vessels

SUBJECT	CFR CITATION
Steering gear installation details	46 CFR 77.03
Steering gear examination, testing, and logging by ship's officers	46 CFR 78.17-15
Instructions for changing steering gear	46 CFR 78.47-55

3. 46 CFR, Subchapter J Electrical Engineering

These regulations were substantially revised in 1982. The revision reflects many recommendations of the National Transportation Safety Board (NTSB), requirements of the Port and Tanker Safety Act (PTSA) and the first amendments to SOLAS 74:

SYSTEM COMPONENT	CFR CITATION
Emergency lighting in steering gear room	46 CFR 112.15-1
Emergency power source for steering	46 CFR 112.15-5
Communication requirements for steering gear room	46 CFR 113.30
Rudder angle indicator systems	46 CFR 113.40
Steering failure alarm systems	46 CFR 113.43

4. 46 CFR, Subchapter T (Small Passenger Vessels (Less than 100 GT))

Steering gear requirements for T-Boats or Small Passenger Vessels may be found at the following references:

	SUBJECT	CFR CITATION
a.	Examination and testing of steering system by inspector	46 CFR 176.814
b.	Steering gear requirements	46 CFR 182.600

5. Steering Gear, Foreign Tankers

The regulation cited in 33 CFR 164.25 contains the requirements from the PTSA. Enacted on 17 October 1978, the PTSA specifically prescribed new steering gear requirements of the 1978 Protocol to SOLAS 74 for both new and existing tankers. The requirements of the PTSA are applicable to U.S. tankers and foreign tankers trading in U.S. ports. These regulations, essentially the same as those adopted by the International Conference on Tanker Safety and Pollution Prevention (TSPP), apply to tankers of more than 10,000 GT. New tank vessels were required to meet additional standards after 1 June 1980. Additional requirements became effective 29 October 1984.

6. Navigation and Vessel Inspection Circular (NVIC) 1-81

NVIC 1- 81, "Guidance for Enforcement of the Requirements of the Port and Tanker Safety Act of 1978," provides a comparison of existing and new steering gear regulations.

7. International Standards

a. Safety of Life at Sea (SOLAS) 60 and 74. The 1960 and 1974 SOLAS Conventions reproduced the steering standards of SOLAS 60 verbatim because final agreement had not been reached on new standards, which were under consideration at the time.

b. International Conference on Tanker Safety and Pollution Prevention (TSPP). One of the important actions that the TSPP, held in London during 6-17 February 1978, recommended was improved steering gear standards for tankers. These were adopted in the 1978 Protocol to SOLAS 74.

c. SOLAS 74/78 and amendments. The 1978 Protocol to SOLAS 74 was ratified on 1 November 1980 and entered into force on 1 May 1981. Steering gear standards for tankers of more than 10,000 GT became effective for new vessels when the Protocol entered into force and allowed an additional 2 years for existing tank vessels to comply. Together with SOLAS 74, these standards are referred to as SOLAS 74/78, and were amended with an effective date of 1 September 1984.

SUBJECT	SOLAS CITATION
Steering gear standards	Chapter II-1, Regulation 29
Additional requirements for electric and electrohydraulic steering gears	Chapter II-1, Regulation 30
Steering gear operation requirements	Chapter V, Regulation 19-1, Regulation 25 of the 2009 Consolidated Edition
Steering gear testing requirements	Chapter V, Regulation 19-2, Regulation 26 of the 2009 Consolidated Edition

H. REQUIRED LOGS AND TESTS FOR ALL VESSELS

1. Steering Gear Testing and Drills

Within 12 hours of departure, or at least 48 hours prior to entering U.S. waters, the ship's steering gear must be checked and tested by the crew. The test procedure must include, when applicable, operation of the following:

a. The main steering gear.
b. The auxiliary steering gear.
c. The remote steering gear control system.
d. The steering positions located on the navigating bridge.
e. The emergency power supply.
f. All rudder angle indicators in relation to the actual position of the rudder.
g. All steering gear control system power failure alarms (46 CFR 113.43).
h. The steering gear power failure alarms (46 CFR 113.43).

NOTE: These checks and tests must include the following:

1. The full movement of the rudder according to the required capabilities of the steering gear.

2. A visual inspection of the steering gear and its connecting linkage.

3. Operation of the means of communication between the navigating bridge and the steering gear compartment.

---

2. Emergency Steering Drills

Emergency steering drills must take place at least once every 3 months to practice emergency steering procedures. These drills must include testing of direct control from the steering gear room, communications, and operation of any alternate power supplies. All officers concerned with the operation or maintenance of steering gear must be familiar with the operation of the steering systems fitted on the ship and with the procedures for changing from one system to another. For more information, see SOLAS 74/78.

---

3. Logging of Steering Gear Tests

All tests and inspections must be recorded in the Official Logbook. For these requirements, see 33 CFR Part 164 and SOLAS 74/78, Chapter V, Regulation 19-2.

I. Summary of Requirements for Steering Gear Alarms and Indicators

FIGURE C4-1: Major Events Contributing to Improved Steering Gear Standards.

Date	Event
1963	46 CFR Subchapter F is revised.
October 1971	Seventh Intergovernmental Maritime Consultative Organization (IMCO) Conference.
2 June 1973	S/S SEAWITCH loses steering control due to the loss of a keeper pin in a shaft coupling to the differential mechanism and collides with the S/S ESSO BRUSSELS: 16 fatalities, $23 million in damage.
6 May 1976	CG proposes rule to require manning of steering gear room in certain waters; proposal withdrawn on 31 Jan 1977 in favor of redundant system controls.
1976-1977	"Winter of the Tankers" (ARGO MERCHANT, SANSINENA, ELSA ESSBERGER). A series of disasters involving U.S. and foreign tank vessels prompts President Carter to propose tanker safety and pollution prevention initiatives, including emergency steering requirements.
24 February 1977	S/S MARINE FLORIDIAN rams Benjamin Harrison Bridge in Virginia when steering power is lost due to a manual transfer switch jarring open.
November 1977	Ninth IMCO Assembly recommends improved steering gear standards.
28 July 1977	M/V SITALA collides with moored barges near New Orleans due to loss of steering hydraulic fluid caused by leaking fittings in a single reservoir system.
6 February 1978	IMCO sponsors International Conference on Tanker Safety and Pollution (TSPP), which accepts improved steering gear standards for SOLAS 74.
16 March 1978	Very large crude carrier AMOCO CADIZ grounds off Portsall, France, following severe damage to the steering gear, after the loss of hydraulic fluid from a flange failure allows the rudder to swing free in heavy seas: millions of dollars in environmental damages, cleanup costs exceed $2 billion.
17 October 1978	Enactment of the Port and Tanker Safety Act (PTSA).
30 August 1979	M/V INCA CAPAC YUPANQUI collides with a moored butane barge after 0.8 ampere fuse opens on the vessel's only steering control system: 12 dead, $10.5 million in damage.
25 May 1980	1974 SOLAS Convention enters into force.
1 May 1981	The 1978 Protocol to SOLAS 74 comes in force.
8 April 1982	CG revises 46 CFR Subchapter J, Electrical Engineering Regulations, and incorporates improved steering standards.

22 May 1982	IMCO becomes the International Maritime Organization (IMO).
1 June 1982	Effective date of revised 46 CFR Subchapter J for vessels contracted for after 1 May 1978.
1 October 1984	First set of amendments to SOLAS 74 effective this date.
29 October 1984	Final rule for 33 CFR Part 164, which incorporates provisions of 1978 TSPP Conference (Regulations 19-1 and 19-2 of SOLAS).

CHAPTER 5: INSPECTION OF INERT GAS SYSTEMS

A. INTRODUCTION

1. Background

Fire and explosion are among the greatest threats to a mariner. On a tankship carrying crude oil, refined petroleum, or chemicals, fire and explosion are even greater threats. A properly designed, installed, operated, and maintained Inert Gas System (IGS) will prevent fire and explosion in an intact ship tank. Combustion is impossible without oxygen. If there is some way to keep the oxygen below about 8 percent, the ship will be free of danger from explosions in intact tanks. Typically, this is accomplished by the addition to the tank atmosphere of a gas that has less oxygen (often 5 percent or less) than air, which has an oxygen concentration of 21 percent. This is what an IGS accomplishes. Of course, when a tank is opened, as in a collision, oxygen can enter the tank regardless of the IGS.

Since the late 1970's, inerting has been required for most U.S. and foreign tankships. 46 CFR 32-53 provides the requirements for vessels required to have an operable IGS.While in U.S. waters, foreign tankships of the same size must have IGSs in operation. Integrated Tug-Barge (ITB) combinations that operate only in a combined mode are subject to the tankship rules for IGSs.

NOTE: For chemical tankers and gas carriers, the applicability of equivalent inerting requirements, as allowed by Safety of Life at Sea (SOLAS) Regulation II-2, 4-5.5, were adopted in 1985 through the International Maritime Organization (IMO) Assembly Resolution.

2. References

There are several good sources of information about IGS in addition to the main regulations for IGS, 46 CFR Subpart 32.53 and Regulation II-2, 4-5.5 of SOLAS.

Commandant's International Technical Series (CITS) Volume VII (USCG CITS-80-1-1), "Regulations and Guidelines for Inert Gas Systems," contains the SOLAS requirements, the IMO Guidelines For Inert Gas Systems, and the National Academy of Sciences National Materials Advisory Board Study on Material Aspects of Inert Gas Systems.

Another excellent resource on IGS is the International Maritime Organization’s MSC/Circ.387 (Revised Guidelines for Inert Gas Systems.

3. Federal Initiatives

A series of tankship accidents in the mid-1970's led to the International Conference on Tanker Safety and Pollution Prevention (TSPP) of 1978 and the passage of the Port and Tanker Safety Act of 1978 (PTSA). A major result of these initiatives is that most U.S. and foreign tank vessels are required to have IGSs in operation while they are in U.S. waters.

The Coast Guard's IGS regulations are contained in 46 CFR Subpart 32.53 (Inert Gas Systems); international rules are contained in Regulation II-2, 4-5.5. (Inert Gas Systems) of SOLAS 74.

The first set of amendments to SOLAS 74 were adopted and came into force on 1 September 1984; under them, a ship must satisfy applicable requirements to receive a SOLAS Safety Certificate. The second set of amendments to SOLAS 74 come into effect on 1 July 1986; they have only a minor effect on the IGS requirements.

B. SYSTEM CONCEPTS

1. Reasons for Inerting Systems

The fire triangle is the basis of fire prevention techniques on tankships. It would not be practical to remove the fuel, which, in this regard, is the vapor generated by the cargo. Unless the cargo is Grade E and carried at a temperature at least 5° C below its flash point (in which case there are no inert gas requirements), the cargo is volatile enough to produce a flammable vapor-air mixture above the fuel.

A flammable atmosphere can be expected after the cargo is offloaded, unless the tank is gas-freed and cleaned of all residue and clingage on its surfaces. If all ignition sources could be eliminated, so would all chances for a fire. However, conditions such as lightning and electrostatic fields generated during tank washing and heavy seas in partially ballasted tanks will always be present as ignition sources. Hence, there is really no practical alternative to inerting cargo tanks.

2. Means of Inerting Cargo Tanks

a. Introduction. The following general description of an IGS includes components that may vary, depending upon the manufacturer. There are several ways to inert a tank.

(1) The simplest way to inert a tank would be to add a pure, nonflammable gas, such as nitrogen or carbon dioxide, to the tank atmosphere. Unfortunately, these pure

gases tend to be expensive, the costs of their storage aboard ship tend to be high, and re-supply in some ports is difficult.

(2) Most inerted tanks use the gases from a fuel burner, from the ship's propulsion equipment (flue gas), or from a unit dedicated to producing inerting gas (an Inert Gas Generator (IGG)).

b. Use of combustion gases. Use of combustion gases as the inerting medium is advantageous due to their availability and low cost, if sufficient fuel and properly adjusted and operated equipment are available.

(1) The disadvantage of this method is that the raw combustion gases are impure and must be treated before use in the cargo tanks. This is especially important for product carriers, in which cargo purity is critical and some cargoes may react with impurities in the inert gases.

(2) Each IGS has several components intended to remove these impurities. For example, sulfur in the fuel appears in the inert gas in the form of sulfur oxides, sulfurous acid, and sulfuric acid. If not removed, these will attack the metal of the tank and gradually destroy it.

(3) Passing the inert gas through a water-filled device called a scrubber removes most of these acids (see C.2 of this Chapter).

c. Gas distribution. When the inert gas is clean, cool, and water-free, it is pressurized and sent to the various cargo tanks through a distribution system.

(1) The distribution system contains backflow prevention devices, control valves, alarms, and automatic shutdowns. These can alert personnel to a malfunction and, when necessary, shut down the system before a dangerous condition develops in the tanks. Such conditions involve the oxygen concentration, the temperature and pressure of the inert gas, the water flow to and water level within the scrubber, and the backflow prevention devices (water seals).

(2) Because IGSs are complex and subject to malfunction, it is important for ships' crews to inspect and maintain them in good working order. The Coast Guard's inspections verify that they are properly maintained and operable.

---

3. Operation of the System

a. Introduction. The purpose of an IGS is to keep the oxygen content of the vapor space below the level needed for combustion. For crude carriers, the oxygen content of the inert gas delivered to the cargo tanks should be no more than 5 percent.

NOTE: This figure may be lower for certain chemicals carried in product carriers.

b. Operation. 46 CFR Subpart 32.53 identifies which product/crude oil tankships must be equipped with an IGS. (See B.4 of this chapter for discussion of "Inerting Requirements for Chemical Tankers and Gas Carriers.")

(1) For inerting purposes, oil cargoes are those cargoes identified as pollution category I in 46 CFR Table 30.25-1. These cargoes may be different from what is considered to be oil for the application of Oil Pollution Act of 1990 requirements.

(2) Generally, vessels required to have an installed IGS must maintain an inert atmosphere in the tanks whenever they are not gas free.

(3) When an IGS-equipped tanker is carrying a cargo that is not required to be inerted and the tank, piping, and venting conditions are functionally equivalent to a non-IGS tanker, the system may be secured.

(4) Table C5-1 summarizes the tanker categories that are required to have an installed IGS and the conditions whereby the system may be secured. On tankers that are required to maintain an inert tank atmosphere, it is not necessary for the IGS to be operated continuously. Once a tank is inerted and the tank openings closed and sealed, inert gas will leak out of the tank at such a small rate that the IGS may only need to be operated intermittently to maintain the inert tank atmosphere.

c. Requirements during transfer and tank cleaning operations. Offloading cargo is one of the few conditions under which the IGS must be in continuous operation.

(1) As the cargo is pumped out, inert gas must be introduced at an equal or greater volume rate, with excess inert gas flow vented to the atmosphere; if this is not done, air will enter the tank.

(2) Loading usually requires no additional inert gas if the tank is already inerted; the incoming cargo will displace the inert gas in the tank, which is then vented.

(3) Similarly, tank cleaning with fixed washing machines should not let inert gas escape. Cleaning with portable machines, if done with proper temporary seals around the machines, should release only a small amount of inert gas (requiring the IGS to operate for a short period to replace the gas that escapes).

(4) To gas-free an empty, clean tank, the IGS can be used to purge the tank free of hazardous vapors. Before loading a flammable cargo into a gas-free tank, the tank should be filled with an inert gas.

---

4. Inerting Requirements for Chemical Tankers and Gas Carriers

In considering the application of IGS requirements to chemical tankers, it was argued that this type of tanker should be given special consideration. This is primarily because both the inert gas from shipboard IGS and impurities in the inert gas can contaminate chemical cargoes. For example, the carbon dioxide produced as an inerting agent can drive certain cargoes off specification. Additionally, there are other chemical cargoes that are shipped with inhibitors that react with the oxygen in the tank to prevent the cargo from undergoing unwanted reactions. Therefore, the displacement of oxygen through inerting by any means (bottled nitrogen, IGG, flue gas systems, etc.) can cause breakdown of inhibitors used to prevent these reactions.

Since the implementation of the 1993 Amendments to SOLAS ’74, Regulation II-2/55.5 has allowed for substitute inerting requirements to be applied to chemical tankers and gas carriers in lieu of the requirements in Regulation II-2/60. These substitute requirements are contained in Res. A.473(XII), adopted on 19 November 1981. They apply to chemical tankers and gas carriers carrying petroleum products only.

The inert gas applicability requirements set out in Regulation II-2/55.5 are further modified by Res. A.566(14). In addition to the substitute requirements of Res. A.473(XII), Res. A.567(14), adopted on 20 November 1985. This extends the applicability of substitute inerting requirements to the carriage of all flammable cargoes onboard chemical tankers and gas carriers. Res. A.566(14) also prescribes the conditions under which no inerting is required.

a. Implementation. Res. A. 566(14) applies only to chemical tankers and gas carriers, which would otherwise be subject to the IGS requirements of 46 CFR Subpart 32.53 and SOLAS Regulation II-2/60 for tankers carrying crude oil and petroleum products.

(1) This category includes all new chemical tankers and gas carriers of 20,000 DWT or more as well as those existing vessels that are at least 40,000 DWT but less than 40,000 DWT if fitted with tank washing machines having an individual throughput of greater than 60 m^3 per hour.

(2) The dates distinguishing “new” from “existing” for the purpose of applying IGS requirements are contained in 46 U.S.C. 3701 and the 1978 protocol to SOLAS ’74.

b. Identification of cargo inert gas need. Next, each flammable cargo to be carried must be considered individually to determine the inerting requirements applicable to the tank in which the cargo is being carried. The flammable cargoes should be divided into the following three categories:

(1) Crude oil.

(2) Petroleum products.

(3) "Other than crude oil or petroleum products."

NOTE: Flammable cargoes "other than crude oil or petroleum products" are those listed in 46 CFR Part 153, Table 1; Chapters VI or VII of the BCH Code; or Chapters 17 or 18 of the IBC Code. The cargoes listed in 46 CFR Part 153, Table 1, closely parallel those listed in Chapter VI of the BCH Code and Chapter 17 of the IBC Code. There is no listing in U.S. regulations parallel to Chapter VII and 18 are identical); however, many of those cargoes are listed in 46 CFR 30.25-1.

d. For chemical tankers and gas carriers carrying flammable cargoes "other than crude oil or petroleum products," there are no inerting requirements, provided that the vessel was constructed before 1 July 1986. If the vessel was constructed on or after 1 July 1986, no inerting is required provided the following conditions are met:

(1) The individual tank(s) involved do not have a capacity exceeding 3,000 m^3.

(2) The individual nozzle capacities of the tank washing machines do not exceed 17.5 m^3/hr.

(3) The total throughput for all the machines in use in a tank does not exceed 110 m^3/hr.

e. For all chemical tankers carrying flammable crude oil or petroleum products, the IGS requirements of IMO Res. A.567(14) apply.

(1) If a chemical tanker was constructed before 1 July 1986, the IGS requirements of IMO Res. A.473(XII) may be substituted for those in IMO Res. A.567(14).

(2) The same requirements as included in this paragraph for chemical tankers or an equivalent should be applied to gas carriers carrying flammable crude oil or petroleum products.

d. There may be instances when a flammable cargo that is not crude oil or a petroleum product also is not listed in 46 CFR Part 153, the BCH Code, or the IBC Code. This is

most likely to occur when a new chemical is marketed and first transported. In situations such as this or any other time there is uncertainty regarding the inerting requirements for a particular cargo carried on board a chemical tanker or gas carrier, Commandant (CG-CVC) should be consulted.

TABLE C5-1: INSTALLATION AND OPERATION REQUIREMENTS FOR IGSS [1,2]

VESSEL TYPE	INSTALLATION REQUIRED?	OPERATION REQUIRED?
Crude Oil Tankships		
Existing ships[3,4] All cargo grades	Yes for ships 20,000 DWT & over	Yes for ships 20,000 DWT & over
New ships All cargo grades	Yes for ships	Yes for ships
Product Tankships		
Existing ships[3] Grades A-D	Yes for ships 40,000 DWT & over	Yes for ships
40,000 DWT & over Grade E5 Design limited	No	No
Operationally limited: No volatile residues from previous voyages[6,7,9]	Yes for ships 40,000 DWT & over	No
Volatile residues from previous voyages	Yes for ships 40,000 DWT & over	Yes for ships 40,000 DWT & over
Any grade with high capacity washing machines (exceeding 60 cubic meters/hour)	Yes for ships 20,000 DWT & over	Yes for ships 20,000 DWT & over
New Ships		
Grades A-D	Yes for ships 20,000 DWT & over	Yes for ships 20,000 DWT & over
Grade E5		
Design limited	No	No
Operationally limited:		
No volatile residues from previous voyages[6,7,9]	Yes for ships 20,000 DWT & over	No
Volatile residues from previous voyages	Yes for ships 20,000 DWT & over	Yes for ships 20,000 DWT & over
Crude Oil/Product Tankships[8:] Existing Ships[3,4]		
Grades A-E crude oil	Yes for ships 20,000 DWT & over	Yes for ships 20,000 DWT & over
Grades A-D product[6,7]	Yes for ships 20,000 DWT & over	Yes for ships 40,000 DWT & over
Grade E5 product		
Design limited	No	No
Operationally limited:		
No volatile residues from previous voyages[6,7,9]	Yes for ships 20,000 DWT & over	No

Volatile residues from previous voyages	Yes for ships 20,000 DWT & over	Yes for ships 40,000 DWT & over
Any grade with high capacity washing machines (exceeding 60 cubic meters/hour)	Yes for ships 20,000 DWT & over	Yes for ships 20,000 DWT & over
Crude Oil/Product Tankships[8]: New Ships		
Grades A-E crude oil	Yes for ships 20,000 DWT & over	Yes for ships 20,000 DWT & over
Grades A-D product	Yes for ships 20,000 DWT & over	Yes for ships 20,000 DWT & over
Grade E5 product		
Design limited	N/A	N/A
Operationally limited:		
No volatile residues from previous voyages[6,7,9]	Yes for ships 20,000 DWT & over	No
Volatile residues from previous voyages	Yes for ships 20,000 DWT & over	Yes for ships 20,000 DWT & over

NOTES:

1. This table is based on the requirements of 46 CFR Subpart 32.53.

2. The requirements for U.S. flag ships (operating worldwide) and foreign flag ships (operating in U.S. ports) are the same except as noted in footnote 8.

3. "New" and "Existing" tankers are defined in 46 U.S.C. 3701 (Contract date after June 1, 1979; in the absence of a contract date, keel laying date after January 1, 1980; delivery after June 1, 1982.).

4. The U.S. and SOLAS regulations provide for inert gas exemptions for existing crude and crude/product carriers in the range 20,000 to 40,000 DWT. However, the United States has not granted any exemptions to date for either U.S. or foreign flag tankships, and the United States does not recognize inert gas exemptions granted by foreign Administrations.

5. This entry applies to a Grade E cargo that is carried at a temperature lower than 5 degrees C below its closed cup flashpoint. If it is heated to within 5 degrees C of its closed cup flashpoint, it is treated as if it were a Grade A - D cargo for the purposes of the IGS. Differentiation is made between tankers that are limited to carriage of Grade E cargoes by design and those that are capable of carrying more volatile cargoes but are only engaged in Grade E trade (i.e., operationally limited). The intent is to ensure that tankers that are operationally limited to Grade E cargoes are

functionally equivalent to tankers that are limited by design to Grade E. See footnotes 6, 7, and 9.

6. Note that where an IGS is installed but not operated, the inert gas main stop valve must be closed and the inert gas blowers and IGG, if any, secured.

7. In some venting system designs, when the IGS is not operating, the inert gas main can serve as a path for fire and explosion to travel from one tank to another. Therefore, if the tank venting system incorporates the inert gas main and the tanks cannot be isolated from the inert gas main without risking over or under pressurizing the tanks, the IGS must operate at all times.

8. Foreign flag crude/product tankships from 20,000 to 40,000 DWT that have received inert gas exemptions from their Administration and that do not have inert gas systems installed may not carry crude oil in U.S. ports. However, they may carry product in U.S. ports.

9. A tank is considered to be free of volatile residues from previous cargoes when it has been cleaned and gas freed (safe for hot work) prior to loading the Grade E cargo. If the vessel shifts from the carriage of Grade D or higher cargoes to the carriage of Grade E cargoes without gas freeing, the first Grade E cargo must be treated as though it contained volatile residues. Subsequent Grade E cargoes need not be inerted provided the requirements of footnote 5 are met.

---

4. Problems of Reactive Products

There is one significant potential problem introduced by the IGS: the creation of pyrophoric iron sulfide. This solid chemical is formed at a very slow rate (building up over a period of months or years) by the reaction of the iron in the cargo tank surface with the sulfur compounds in the cargo. Iron sulfides react spontaneously and very rapidly with oxygen in the air, giving off heat.

In an uninerted tank, this is not a problem. Each time that the tank is emptied (usually every few weeks), the iron sulfides react with the oxygen before much of a deposit has formed; thus, there is no opportunity for a buildup. If the tank is inerted, however, the tank surfaces may not be exposed to air for as long as 2 or more years and the iron sulfide may build up. When suddenly exposed to air, it will react, give off heat, and ignite any flammable vapors present. Although the IMO is examining this problem, no definitive solution has been found. A tankship should not be offloaded with an inoperative IGS because the process results in large amounts of oxygen entering the tank. In such cases, an external source of inerting gas should be used as a substitute for the inoperative system.

---

5. Basic Inspection Considerations

IGSs are complex, and the Marine Inspector should invest the time to learn what an IGS is, how it is designed, and how it can fail.
There are numerous IGS designs in use today. These involve different methods of producing inert gases, various ways to clean the gases themselves, and a vast number of combinations of types and arrangements of valves and piping.

The inert gas is either treated flue gas from the ship's boilers or combustion gases from a separate, dedicated IGG. The major difference between flue gases and products of an IGG is that the sulfur oxide, sulfurous acid, and sulfuric acid concentrations are considerably lower when a low sulfur fuel is burned in the IGG. Otherwise, the principles of unable to support combustion operation, components, and general design are similar.

Prior to inspecting an installed IGS, the inspector must become familiar with the particular system he or she will inspect, including a review of the manufacturer's instruction manual and the ship's operation and maintenance manual. The latter must provide specific outline plans, instructions, and safety precautions for the particular vessel.

SAFETY NOTE: Above all, the inspector must be careful: if a tank atmosphere has been inerted by an IGS, it will not support life, either. A person who enters an inerted space without adequate breathing apparatus will die within a few minutes.

No person must enter a tank unless it has been certified gas free by a Marine Chemist.

C. TYPICAL SYSTEM COMPONENTS FROM THE GAS SOURCE TO THE TANK

1. Boiler Uptake Valves (Flue Gas Isolating Valves, IGG Isolating Valves)

These valves are located near the main boiler uptake to isolate the IGS scrubber from the boiler uptake. Alternatively, if a dedicated IGG is used, this valve will be located near the IGG; it is closed when the IGS system is not operating. Associated with each boiler uptake valve is a steam soot-blowing system. A spectacle blank is also fitted between the boiler uptake valve and the IGS scrubber to ensure complete isolation of the IGS plant and cargo. This is very important to ensure that inert gas is not introduced into the system during maintenance.

2. IGS Scrubber (Scrubbing Tower, Absorption Tower, and Gas Washer)

The raw inert gases are hot and contain soot, sulfur oxides, sulfurous acid, and sulfuric acid; all of these can be harmful to the cargo and the cargo tanks. The scrubber cools the gases and removes the contaminants by bubbling the gases through large quantities of seawater (there must be two sources of water for the scrubber). The gases are then sprayed with additional quantities of water, or rise through a packed bed of ceramic forms, plastic shapes, or metal trays through which seawater falls, increasing the efficiency of the water in cleaning the inert gas.

If the scrubber is provided with a heater to prevent the water from freezing, an automatic control system is installed to prevent its overheating. The scrubber also acts as an automatic safety device by preventing a backflow of gas to the boiler uptake or the IGG (see Figure C5-1).

---

3. Demister Units

The gas from the scrubber has significant amounts of moisture, both from the burning process and from bubbling through the seawater in the scrubber. The demister is located close to the scrubber to remove entrained water from the IGS gas stream. If this water is not removed, it increases the corrosion rate in the system's piping, valves, and cargo tanks. Water may also contaminate the cargo. The demister may consist of "pads" or "mattresses" of woven polypropylene or fiberglass, or centrifuge separation (cyclone dryers). There are many designs, which vary considerably.

---

4. IGS Blowers (Fan Units)

Two or more independent blowers are located near the demister to draw the inert gas through the scrubber and the demister and deliver it to the IGS distribution system at the required pressure.

Since the greatest need for inert gas is during offloading, the blower capacity is set at 125 percent of the maximum rated capacity of the cargo pumps. This provides a margin of safety to ensure that no air enters the cargo tanks. This capacity may be provided by two blowers of equal size, or by one large and one small blower. Separate inlet and discharge valves are fitted to each blower unit. On most plants, the valves are hand-operated, but on some the discharge valves are combined with the main and auxiliary pressure regulating valves.

---

5. Pressure Regulating Valve (Gas Regulating Valve, IGS Control Valve, Main Valve)

The pressure-regulating valve is used to adjust the pressure between the IGS and the cargo tanks. An overpressurized cargo tank can rupture if the pressure in the IGS value is too high. It is also important to prevent backflow from the cargo tanks, which could lead to inert or cargo gases entering the machinery spaces. A fire or explosion could occur if cargo gases mix with air and enter the boilers, the engines, or the IGG.

The pressure-regulating valve is installed to regulate the flow of inert gas to the IGS deck main, maintain the IGS pressure, and prevent gas backflow when the IGS malfunctions or is shut down. The value position may be controlled either manually or automatically. For automatic control, the IGS pressure is used to set the valve in a pneumatic, hydraulic, or electric feedback control to maintain a constant pressure regardless of the rate of cargo discharge.

NOTE: Electrical equipment in a hazardous location must be suitable, i.e., explosion-proof, intrinsically safe, or purged and pressurized.

---

6. Deck Water Seal

   a. Usually located on the main deck, the deck water seal is the primary safeguard to automatically prevent a reverse flow of cargo gas from a tank to the boilers, the engines, or the IGG.

      (1) The deck water seal offers a positive break in the system by means of a water trap. This permits inert gas to be delivered to the main deck while preventing gas backflow, even when the IGS is shut down.

      (2) Chapter 15 of the International Code for Fire Safety Systems (FSS Code) requires two independent water supplies for the deck water seal. When the IGS is operating, the scrubber pump supply is used; the second supply, normally the salt water service pump, is used when the IGS is not operating. Each pump must be capable of operation at all times.

      (3) There should be provisions in place to prevent the water in the seal from freezing and an automatic control system that prevents overheating of the seal.

      (4) Although it is not required, a demister is usually fitted to separate any remaining water and solids from the inerted gas. There is always a water layer through which the inert gas bubbles (see Figures C5-2 through C5-4).

   b. Type requirements. There are three general types of deck water seals: wet, semidry, and dry.

(1) The wet seal is described in Figure C5-3. It is deemed the most reliable seal and is the only type generally approved for use on U.S. vessels.

(2) The semidry seal operates dry after the inert gas flow displaces the water. Venturi action returns the water when a gas block is needed, as described in Figure C5-4. This type of seal may be approved for U.S. vessels on a case-by-case basis, if the unit is quick-acting, has no moving parts, and has no sensors that are subject to failure.

(3) The dry seal operates normally dry and is filled with water when the inert gas plant is shut down or when tank pressure exceeds the inert gas pressure. This system requires more operating parts, reacts more slowly than and is not deemed as reliable as the wet type. Dry seals are not approved for use on U.S. vessels. See Figure C5-4 for a more complete description.

(4) A double block-and-bleed arrangement is not common but may be used on some foreign vessels in place of the water seal. This involves two closely spaced valves to stop the inert gas flow (the "double block") plus a means to release (or "bleed") any gas trapped between the valves. This automatic device is not permitted on U.S. ships as a substitute for the required water seal.

---

7. Deck Mechanical Non-Return Valve

In addition to the deck water seal, FSS Code 15/2.3.1.4.3 requires a second non-return device with a positive means of closure be fitted in the inert gas supply main. Review the FSS Code for further guidance.

FIGURE C5-2: TYPICAL IG SYSTEM COMPONENTS

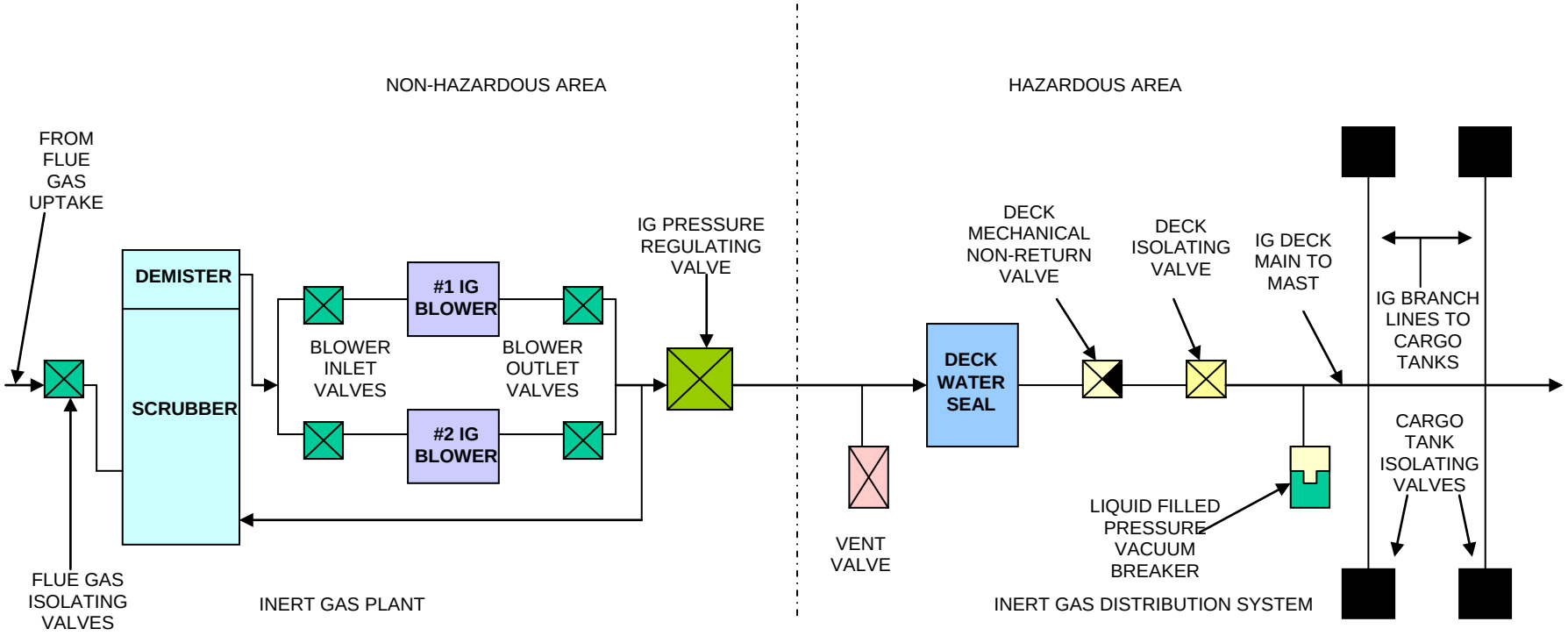

TYPICAL ARRANGEMENT FOR AN INERT GAS SYSTEM

FIGURE C5-3: DECK WATER SEAL — WET TYPE

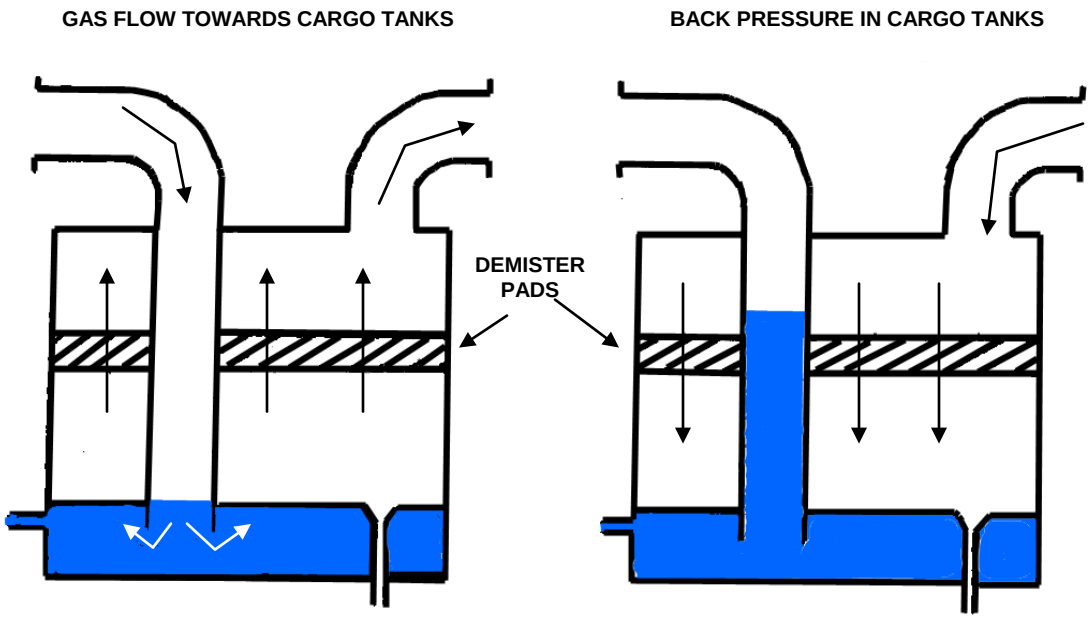

DECK WATER SEAL — WET TYPE

FIGURE C5-4: DECK WATER SEAL — SEMI-DRY TYPE

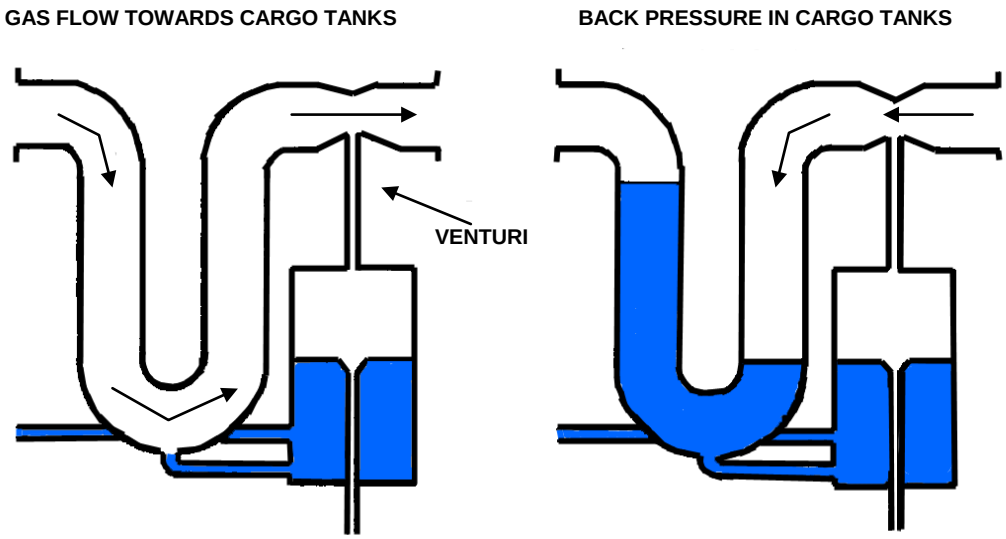

DECK WATER SEAL — SEMI-DRY TYPE

FIGURE C5-5: DECK WATER SEAL—DRY TYPE

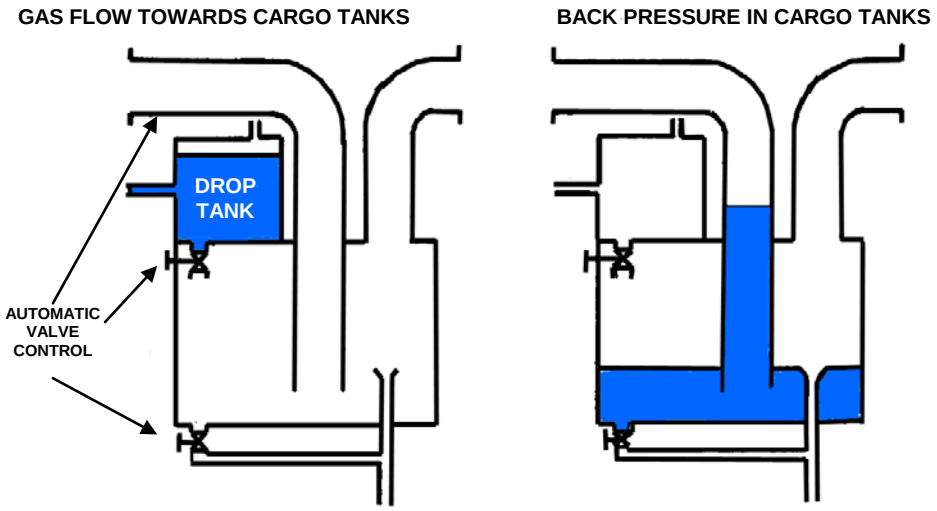

DECK WATER SEAL — DRY TYPE

In the dry type seal, the water is drained from the seal when the IG plant is in operation (gas flowing to the tanks), and filled with water when the IG plant is either shut down, or the tank pressure exceeds the IG blower discharge pressure. Filling and drainage are performed by automatically operated valves controlled by the levels in the water seal and the drop tank, and by the operating state of the blowers.

U.S. vessels must be equipped with seals that are completely passive in operation so that failure of sensors, control systems, or moving parts cannot cause failure to establish a seal. Active seals, such as the dry seal shown above, are not acceptable. For the relevant regulations, see 46 CFR 32.53-10.

8. Deck Isolating Valve (Main Isolating Valve)

This valve is used to isolate the inert gas plant from the deck distribution subsystem and the cargo tanks; it therefore constitutes the "first" barrier to any reverse flow of cargo tank gas when the IGS is started, tested, or secured. A second valve is necessary unless the deck mechanical non-return valve has a positive means of closure.

---

9. Deck Distribution System

This subsystem consists of a single inert gas main running the entire length of the cargo deck, starting at the deck isolating valve aft and ending at the vent valve forward. One or more pressure/vacuum devices are fitted to the inert gas main to prevent the cargo tanks from being over or under-pressurized. The inert gas main contains a means for receiving an outside source of inert gas when the IGS is not functioning. From the inert gas main, individual branch lines run to the cargo tanks. Stop valves or equivalent closures are fitted at each branch line so that each cargo tank can be isolated from the IGS.

If there is a connection between the inert gas main and the cargo piping system, there must be valves or similar closures to isolate the systems from one another.

---

10. Typical Gas Venting Arrangements

a. Venting system. Each tank vessel has a venting system that is capable of venting vapors displaced from the cargo tanks during loading and ballasting. There are also Pressure/Vacuum (P/V) valves to protect the cargo tanks from overpressure or vacuum resulting from thermal variation when the cargo tanks are isolated from the inert gas mains. Some of the possible arrangements are--

(1) A single common venting system using the IGS deck main and branch lines from each tank and venting to the atmosphere through one or more mast risers or high-velocity vents. Precautions must be taken to prevent an arrangement by which tank vents can be blocked off;

(2) A common venting system using a separate vent main and vent lines from each tank, with the system venting to the atmosphere through one or more mast risers or high-velocity vents; or

(3) Individual vents on each tank using either standpipes (vent stacks) or high-velocity vents.

b. High level alarms. Tank high level alarms have been accepted in lieu of equal area venting required by 46 CFR 56.50-85(a)(7). However, precautions are necessary to prevent tank over pressurization during cargo or ballast loading. The oil transfer procedures, Crude Oil Washing (COW) procedures, equipment manual, and ballasting instructions should include requirements for testing high level alarms and the proper positioning of valves for each type of operation.

11. System Documentation

Each tank vessel is required by FSS Code to have an operating and maintenance manual. There are devices located downstream of the blowers to indicate the oxygen concentration and the IGS pressure and temperature, as well as a means of automatically recording this information. The records of oxygen concentration and IGS pressure should remain aboard the vessel for at least 2 years.

D. GAS FLOW THROUGH THE IGS

1. Introduction

Inert gas is provided from the main or auxiliary propulsion uptake point or from the IGG, and flows through the flue gas isolating valve or IGG isolating valve to the IGS scrubber. Before entering the bottom of the scrubbing tower, the gas is cooled by bubbling through a water seal or by passing through a water spray (see Figure C5-2 for a diagram of a typical IGS arrangement).

2. Water Flow

a. In the scrubbing tower, the gas moves upward through a supply of downward-flowing seawater. To maximize the contact between the gas and the water, several water layers created by one or more of the following arrangements may be used:

(1) Spray nozzles.

(2) Trays of packed stones or plastic shapes.

(3) Perforated impingement plates.

(4) Venturi nozzles and slots.

b. Seawater is supplied to the scrubber by an independent, continuously rated scrubber pump. The saltwater service pump is normally piped into the system to provide a secondary or backup supply of seawater. The scrubber effluent ("wash" or "cooling water") is both warm and acidic, and special corrosion-resistant piping must be used to discharge it overboard. A vacuum breaker (U-bend) is necessary to prevent possible loss of water in the seal.

NOTE: The scrubber must have an adequate supply of saltwater for the prescribed gas flow. A low saltwater level means that the scrubber will not work as designed or not at all.

c. Fresh water flushing facilities are provided so that all acidic solutions and all salt water may be removed from the scrubber when the IGS is shut down.

---

3. Refinement of the IG Mixture and Flow Control

At the top of the scrubbing tower, water droplets are removed from the inert gas mixture by one or more demisters. The operating blower draws the gas from the scrubber/demister unit under vacuum and delivers it to the inert gas distribution at the required pressure and volume.

The total capacity of the blowers must be at least 125 percent of the maximum rated capacity of the cargo pumps. The blowers may be either steam turbine or electric powered. Steam inlet and return valves are manually operated, but both blowers can be controlled from the engine control room.

To prevent the blowers from overheating when there is no demand for inert gas in the cargo tanks and to allow gas concentration to be developed during startup, a recirculating line is fitted to return the blower discharge to the scrubber. Flow is controlled by recirculating or bypass valves, operated independently by gas flow demand, or in conjunction with the gas pressure regulating system.

---

4. Alternate Blower Arrangements

Some IGS blowers are used to gas free the cargo tanks in lieu of portable blowers or a separate fixed gas freeing blower system. In this arrangement, the installation is fitted to isolate the flue gas and substitute suction from the atmosphere.

As with the scrubber, fresh water flushing facilities are fitted to remove acidic residues in the blower casings. The fresh air then passes through the pressure regulating valve, the deck isolating valve, the IGS main, and the individual branch lines into the cargo tanks.

E. INTERNAL INSPECTIONS OF IG SYSTEMS

1. Introduction

The Marine Inspector must appreciate the potential for introducing "dirty" or corrosive gas into the IGS by improper operating procedures or poor maintenance practices. This situation will create an environment for rapid system degradation or component failure.

The following policy is not intended to be applied during routine testing of the IGS on either a U.S. or foreign tanker during a COI, Annual, or PSC/COC exam. Internal inspections are anticipated by the operators of U.S. tankers during scheduled drydock exams.

2. Specific Inspection Guidelines

a. Scrubber. Where feasible, all access plates and internal components such as demister pads and scrubber trays must be removed. Soot and scale deposits must be removed prior to the inspection. The following areas and internal components should be given close attention:

(1) Internal coatings should be completely intact. Check for signs of chipping or cracking, particularly around internal fastenings.

(2) Gas inlet pipe in the scrubber water seal should be inspected for corrosion and holes or leaking flanges, especially above the water level, that would allow gas to bypass the seal and render it ineffective.

(3) The internal area at the bottom of the scrubber should be closely inspected for corrosion, especially in way of the effluent discharge line. The discharge line should be checked for clogging.

(4) Float switches, temperature sensors, Venturi slots, impingement plates, packed trays, and demisters (as applicable) should be inspected for damage, wastage, and corrosion.

(5) The water heater (used to prevent water freezing) and its control system should be in good condition.

(6) Fresh and saltwater inlet piping should be inspected for corrosion or wastage, and especially for holes or leaking flanges. Spray nozzles should be checked for clogging and intact condition.

b. Valves. Boiler uptake (or IGG) valves, blower inlet and discharge valves, recirculating valves, pressure regulating valves, deck mechanical non-return valves, deck isolating valves, and IGS isolating valves must be disassembled for inspection.

(1) Valve internals must be inspected for cleanliness, and for signs of corrosion or erosion.

(2) Careful attention should be given to "butterfly" mechanisms to ensure free, smooth operation, and proper seating.

(3) Check non-return valve seals. If accessible, either through inspection ports or disassembled components, the internal areas of the inert gas main and branch lines must be checked for excessive scale buildup or soot deposits, which could result in a critical gas pressure drop between the IGS blowers and the cargo tanks.

c. Deck water seal. This must be disassembled. Internal coatings must be inspected for intactness; housing and heating coils, for corrosion; gas inlet pipes, for corrosion, holes, or leaking flanges (especially above the water level) that would permit gas to bypass the seal; and drain lines, for clogging or corrosion.

(1) The demister pads must be clean and free of soot and scale deposits.

(2) Check that the heater (used to prevent water freezing) and its control system are in good condition. Only the wet type of water seal is permitted; in this type there is always water present in the device and the inert gas flowing through the seal always bubbles through a layer of water.

(3) Semidry seals, in which water is not always present, are approved for U.S. vessels on a case-by-case basis.

(4) Dry water seals and the double block-and-bleed assemblies are not permitted aboard U.S. vessels.

d. Blowers. The inspection ports and access plates on all blowers must be opened. Blower impellers, bearings, and casings must be checked for corrosion or excessive buildup of deposits that may cause blade failure. If accessible, fresh water flushing spray nozzles must be checked for intactness or clogging; the blower drain piping, for corrosion or clogging.

e. P/V valves. P/V valves must be disassembled and inspected for corrosion and the choking of flame screens from soot, oil entrainment, and rust. The forward pressure release valve must be disassembled and the butterfly mechanism inspected for free, smooth operation and proper seating. If feasible, the liquid-filled, P/V breaker must be drained and inspected for sludge, sediment, or soot deposits that could render the component ineffective. High-velocity vent installations must be inspected for internal deposits or corrosion that may reduce venting capacity or prevent tight closure.

f. Flue gas uptakes. If accessible, the flue gas uptake should be inspected for clogging from soot deposits when the boilers, engines, or IGGs are secured. On systems with IGGs, the combustion chamber must be checked for soot, scale, or fuel deposits that could indicate improper combustion control or a distorted fuel spray pattern.

g. Calibration. Check the equipment used for the calibration of the fixed and portable gas concentration measurement devices.

F. OPERATIONAL INSPECTIONS

1. Introduction

The following tests must be conducted on U.S. tankships during annual and COI exams and, on foreign tankships, at each PSC/COC examination.

On all vessels, these tests must be conducted prior to allowing COW in a U.S. port.

The scope of such tests must be sufficient to ensure that the IGS is operating within the manufacturer's design parameters and that the installed safeguards will operate as designed in the event of system malfunction.

The Marine Inspector must review the manufacturer instruction manual and the vessel's operating and maintenance manual, and must be alert to conditions that must be simulated. The inspector must not accept a manual that does not address specific safety precautions for the particular vessel.

2. Inspection Procedures

a. Externally inspect the condition of all piping and components, including scrubber, fans, valves, bellows expansion pieces, standpipes, and screens, for signs of corrosion and gas/effluent leakage.

b. Observe all IGS blowers in operation for proper operation and for excessive bearing noise or vibration. Ensure that the scrubber room ventilation system is operating.

c. Observe the operation of both the salt water scrubber pump and the pump used to provide an alternate salt water supply.

d. If the scrubber design uses a water seal, check for proper water level. Some foreign vessels are fitted with water sprays only, but U.S. vessels must have a wet type water seal.

e. Observe the deck water seal for automatic filling and check the water level with the local gauge, if possible. Check for the presence of water carryover (especially in the wet and semidry types) by opening the drain cocks on the IG main during operation. Check that the heater coil for cold weather operation is operational.

f. Check the operation of all remotely operated or automatically controlled valves, particularly the flue gas isolating valves. Check that there are functioning indicators showing whether the valves are open or shut.

g. If possible, check the level of the liquid in the P/V breaker.

h. Check to ensure that all salt water supply pressure gauges, oxygen and gas pressure recorders, and temperature and pressure gauges are fully operational. The fixed inline oxygen analyzing equipment will be calibrated during the operation of the IGS. Observe a calibration check of the equipment by a qualified member of the ship's crew. Spot-check several recordings made since the last inspection during normal system operation for compliance with oxygen and pressure level requirements.

i. Examine the blower drives, the seawater pumps, valves, and strainers for the scrubber and the water seal; the piping connections at the scrubber; water seals; and the shell plating.

j. Observe that all portable instruments are properly calibrated and operating as required by the manufacturer instruction manual. These may include an oxygen analyzer, a combustion gas indicator, and a hydrocarbon gas indicator. Sample points should be provided for the use of portable instruments for monitoring cargo tank atmospheres.

k. If an IGG is used, examine the automatic combustion control system, the combustion chamber and its mountings, the forced draft fan, and both fuel oil service pumps.

---

3. Operational Tests

   a. The operation of both audible and visual alarms should be observed in the cargo control room, the engine control room, and the pilothouse. The marine inspector must consult the manufacturer instruction manual and the ship's operation and maintenance manual for guidance in establishing proper test procedures. Simulation may be necessary for some tests. However, simulation tests of the alarm panel must not be accepted as evidence of satisfactory operation of the following alarm and safety shutdown systems:

      (1) High oxygen content of gas in IGS main; alarms activated at an 8 percent concentration.

      (2) Low gas pressure in IGS main downstream of all non-return devices; alarms activated at 100mm (4 inches) water gauge. An automatic shutdown of the cargo pumps may be fitted on some vessels. Also, high gas pressure in the IGS main downstream of all non-return devices.

      (3) A low level water alarm, high level water alarm, or low flow pressure alarm fitted to the deck water seal to shut down the IGS blowers automatically.

      (4) IGS blower high discharge temperature alarm that will automatically shut down the IGS blowers and the gas regulating valve; alarms activated at 150°F (65.6°C) or less for U.S. vessels and at temperatures indicated in approved operation manual for foreign vessels.

      (5) High gas pressure of the inert gas supply forward of the non-return devices.

      (6) IGS blower failure alarm and automatic shutdown of main or regulating valve.

      (7) Power supply failure for the automatic control system gas regulating valve and the indicating devices showing the proper quantity and quality of the inert gas supply.

      (8) Insufficient fuel oil supply to the IGG and the failure of the power supply to the IGG.

   b. Conduct backflow pressure test of water seal and non-return valve.

   c. Test interlocking of soot blowers. The IGS will automatically shut down if soot blowers are operated.

d. Test for automatic shutdown of the gas pressure regulating valve when the IGS blowers are secured.

e. Test the automatic combustion control features of the IGG (if used) in accordance with standard combustion test procedures for automatic auxiliary heating equipment (see 46 CFR Part 63).

f. Test IGS remote shutdown required by 46 CFR 111.103-9.

G. SAFETY PRECAUTIONS

1. Introduction

The purpose of an IGS is to establish positive pressure in a cargo tank with an atmosphere that will not support combustion. If an atmosphere will not support a fire, it will not support life. Clearly, such an inerted, pressurized atmosphere is highly dangerous, producing unconsciousness and death in a short period. The following guidance is intended to make inspectors aware of the fundamental steps that must be taken to ensure IGS safety.

2. References

In addition to this chapter of the MSM, the inspector should consult the following sources:

a. 46 CFR Subpart 32.53.

b. The American Bureau of Shipping (ABS) Rules for Building and Classing Steel Vessels, Appendix B, Regulation 10.

c. SOLAS 74/78, Chapter II-2, Regulation 4, and amendments.

d. The manufacturer instruction manual.

e. The vessel's operating and maintenance manual.

f. Commandant's International Technical Series (CITS), Volume VII (USCG CITS-80-1-1), "Regulations and Guidelines for Inert Gas Systems."

3. Requirements for an Escort

The Marine Inspector must always have a ship's officer or port engineer trained in the operation of the IGS along as an escort. The ship's officer or the port engineer will oversee all required tests and inspections.

---

4. Personal Caution

Always stand well clear of any ullage opening when the cover is being removed, even though the cargo tank pressure has been lowered to a safe level. Wear protective clothing and goggles when conducting internal inspections of the system.

Remember that the potentially corrosive nature of the dirt, scale, and soot associated with the internals of an IGS can irritate or damage your skin and eyes.

---

5. Requirements for Tank Entry

The Marine Inspector must not, under any circumstances, enter a cargo tank when the IGS is operating or when the tank or the adjacent tanks have been inerted, unless the following steps are taken:

a. The cargo tank must be certified "safe for workers" by a certified marine chemist.

b. Pressure on the remainder of the system must be lowered to 200mm (8 inches) water gauge to minimize the possibility of IGS leakage into the "gas-free" cargo space.

c. The IGS branch line control valve to that tank must be closed, with a person stationed at the ullage opening within clear view of the valve. This person should be wearing a self-contained, pressure-demand breathing apparatus, ready for immediate use, and should be provided with a rescue lifeline and a standby person positioned as noted above.

NOTE: If an isolation blank is fitted instead, it must be wired closed with the label "Personnel in cargo tank."

d. Drain lines (if fitted) from the IGS main to that cargo tank must be secured.

e. The relevant cargo line valve must be closed.

f. The cargo tank must be continually vented and regularly tested with the portable oxygen analyzer.

g. An approved self-contained, pressure-demand breathing apparatus must be worn for immediate use, if needed. It must be equipped with a belt-mounted, calibrated oxygen/combustion gas indicator in continuous operation.

---

6. Ventilation Requirements

If the IGS is secured and the IGS blowers are being used to purge and ventilate the cargo tanks, the branch valve must be left open.

In this case, ensure that the spectacle blank or valve downstream of the boiler uptake valve is in place and that a person is stationed at that blank.

---

7. Branch Line Inspections

Never inspect the flue gas bellows or scrubber unless all branch line spectacle blanks are in place (or branch line isolation valves are closed), the spectacle blank downstream of the boiler uptake valve is in place, isolation valves are closed, and the IGS has been purged and certified "safe for workers" by a marine chemist. If a boiler is operating, require a person to be stationed at the spectacle blank downstream of the boiler uptake valve.

---

8. Internal Inspections of Enclosed Spaces

When conducting internal inspections of pumprooms, cofferdams, permanent ballast tanks, and fuel oil tanks on tank vessels fitted with IGS, be aware that inert gas may have leaked into such tanks or compartments.

While inspecting the tank or compartment, the inspector must be equipped with an emergency escape breathing apparatus and a belt-mounted, calibrated oxygen/combustion gas indicator that is in continuous operation. Always test for sufficient (at least 19.5 percent) oxygen first, then test for vapors above 10 percent of the lower flammable limit.

NOTE: A combustion gas indicator will not give an accurate indication of the percentage of hydrocarbon gas in an oxygen-deficient atmosphere. A hydrocarbon gas content meter must be used to determine whether hydrocarbon vapors are present in an inerted tank or compartment.

H. PRESSURIZATION OF IG SYSTEMS

1. General Requirements

The operational requirements in 46 CFR 32.53-5 require the master to ensure that the IGS is operated as necessary to maintain a positive pressure on the cargo tanks. This requires the tank to be sealed at all times except when the tank is either gas-free or carrying a cargo that cannot produce a flammable atmosphere.

For certain cargoes, the cargo purity is of critical importance; thus, the cargo tanks must be gas-freed and entered prior to loading. In such instances, standard gas-freeing procedures must be followed.

2. During Periods of Cargo Access

The high costs of crude oil and petroleum products can require cargo level measurement and cargo sampling before and after loading, and before and after the cargo is transferred. Cargo and ballasting operation must not be performed while manual measurement or cargo sampling is being conducted.

The following requirements apply:

a. A minimal number of small tank openings may be uncovered for as short a time as necessary to perform measurement or sampling.

   (1) If tanks are thus opened prior to cargo transfer, the tanks must be repressurized before beginning the transfer.

   (2) If tanks are thus opened after cargo transfer, the tanks must then be repressurized before beginning another transfer or the vessel leaves port.

b. Neither cargo transfer nor movement of the vessel must begin until all conditions have been checked and are in order.

c. During cargo transfer operations, the oxygen content and pressure of the inert gas in the IG main must be continuously recorded.

`

CHAPTER 1: GENERAL ASPECTS OF PORT STATE CONTROL EXAMINATIONS

A. INTRODUCTION

Foreign vessels operating in U.S. waters are subject to inspection under Title 46 United States Code (U.S.C.) Chapter 33. Reciprocity is accorded to vessels of countries that are parties to the International Convention for the Safety of Life at Sea (SOLAS) (46 U.S.C. 3303(a)). In addition, certain provisions of U.S. pollution prevention and navigation safety regulations (33 Code of Federal Regulations (CFR) Parts 154-156 and Part 164, respectively) apply to foreign vessels operating in U.S. waters. The applicability of many of these laws and regulations has been modified by international conventions. This chapter explains the application of the laws, convention agreements, and regulations that apply to all foreign vessels operating in U.S. waters.

B. BACKGROUND

1. Port State Control

Port State Control (PSC) is the process by which a nation exercises its authority over foreign vessels in waters subject to its jurisdiction. This authority comes from several sources, both domestic and international. A nation may enact its own laws and regulations imposing requirements on foreign vessels trading in its waters (i.e. the double hull requirements imposed under the Oil Pollution Act of 1990 (OPA 90), or the navigation safety regulations found in 33 CFR Part 164). In addition, nations which are party to certain international conventions are empowered to verify that vessels of other nations operating within their waters comply with these conventions, and to take action to bring these ships into compliance if they do not. Such conventions include SOLAS; the International Convention on Load Lines 1966 (ICLL); the International Convention for the Prevention of Pollution from Ships 73/78 (MARPOL); the International Convention on Standards of Training Certification and Watchkeeping for Seafarers, 1978, as amended (STCW 95); and the International Labor Organization Convention No. 147, The Convention Concerning Minimum Standards in Merchant Ships (ILO 147)). The United States exercises its PSC authority through the U.S. Coast Guard's Port State Control Program. This program is administered in Commandant (CG-CVC).

Through the PSC program, the Coast Guard verifies that foreign flagged vessels operating in U.S. waters comply with applicable international conventions, U.S. laws, and U.S. regulations. In an effort to reduce deaths and injuries; loss of or damage to property or the marine environment; and disruptions to maritime commerce, PSC exams focus on those vessels most likely to be substandard, based on identified risk factors. When vessels that are not in substantial compliance with applicable laws or regulations are identified, the Coast Guard imposes controls until the substandard conditions have been rectified and the vessels are brought into compliance. The goal of the PSC program is to identify and eliminate substandard ships from U.S. waters. The term "substandard ship" is defined in C. 13 of this

Chapter. Interested parties can access more information on the PSC program through the Coast Guard's Homeport Web site at http://homeport.uscg.mil.

C. DEFINITIONS AND TERMS OF REFERENCE

1. Bulk

Bulk identifies any cargo that is loaded directly into a hold or tank on a vessel with no intermediate form of containment (e.g. packaging, containers or portable tanks). See SOLAS Chapter IX for the definition of bulk carrier under the International Safety Management (ISM) Code.

2. Cargo Control Area

Cargo control area means the usual station of the Person in Charge (PIC) during bulk liquid transfer operations (including bunkering). The cargo control room is considered a cargo control area. A vessel may have more than one cargo control area (i.e., one for cargo and one for bunkering).

3. Clear Grounds

Clear grounds means evidence that the ship, its equipment, or its crew do not correspond substantially to the requirements of the relevant conventions or that the master or crew members are not familiar with essential shipboard procedures relating to the safety of ships or the prevention of pollution. Examples of clear grounds are listed later in this chapter.

4. Conditions of Entry (COE)

Conditions of Entry are security requirements imposed on vessels arriving to the U.S. after calling on ports that the Coast Guard has determined to lack effective anti-terrorism measures, or from those ports that he Coast Guard cannot ascertain that effective anti-terrorism measures are in place.

5. Contracting Governments and Parties

Contracting governments and parties means governments or flag States that have legally accepted to be bound by the requirements of a convention, protocol, or other instrument.

---

6. Contravention

Contravention is an act, procedure, or occurrence that is not in accordance with a convention or other mandatory instrument, or its operational annex.

---

7. Control

Control means the process of imposing a port State's or flag State's authority over a vessel to ensure that its structure, equipment, operation and crew meet applicable standards. The process is effected by any verbal or written directive of the Officer in Charge, Marine Inspection (OCMI), Captain of the Port (COTP), or their representatives, which requires action or compliance by the crew or other persons responsible for a vessel. Control may take several forms including requiring corrective action prior to returning to the United States, requiring a vessel to proceed elsewhere for repairs, denying entry into port, or detaining a vessel in port.

---

8. Deficiency

A condition found not to be in compliance with the conditions of the relevant convention, law or regulation.

---

9. Detention

Detention is an intervention (action taken) by the port State when the condition of the ship or its crew is substandard. The port State must ensure that the ship will not sail until it can proceed to sea without presenting a danger to the ship or persons on board, or without presenting an unreasonable threat of harm to the marine environment. Detentions may be carried out under the authority of SOLAS 1974, as amended, Regulation 19; ICLL Article 21; MARPOL Article 5; STCW Article X and Regulation 1/4. Additionally, detentions may be carried out under domestic authority such as the Ports and Waterways Safety Act.

---

10. Examination (Compliance Exam)

A compliance exam is not synonymous with the term “boarding” or “security boarding” (see below definition). An exam is the process of assessing a vessel's compliance with the relevant provisions of international conventions, domestic laws, and regulations. The scope of an exam must be to the extent necessary to verify the validity of the relevant certificates and other documents, and to ensure that no unsafe conditions exist. An exam may include, but is not limited to, checks of documents, certificates, manuals, the vessel's structural integrity, machinery, navigation, pollution prevention, engineering and safety systems, maintenance programs, security, and crew proficiency. Generally there are three types of compliance examinations conducted on foreign vessels: PSC Safety and Environmental Protection Compliance Examinations, International Ship and Port Security (ISPS)/Maritime Transportation Security Act (MTSA) Security Compliance Examinations, and Non-Convention Security Compliance Examinations (for foreign vessels that need to comply with domestic regulations, but not international conventions). The procedures for each of these examination types are discussed in greater detail in this chapter.

---

11. Intervention

Intervention means a control action taken by a port State in order to bring a foreign flag vessel into compliance with applicable international convention standards. Interventions may also be undertaken by a port State when a vessel's flag State has not, cannot, or will not exercise its obligations under an international convention to which it is a party. This may include requesting information, requiring the immediate or future rectification of deficiencies, detaining the vessel, or allowing the vessel to proceed to another port for repairs. An intervention is not synonymous with a detention; however, a detention is a type of intervention.

---

12. Non-Conforming Ship

Non-conforming ship means any vessel that fails to comply with one or more applicable requirements of U.S. laws or international conventions. A non-conforming ship is not necessarily a substandard ship, unless the discrepancies endanger the ship, persons on board, or present an unreasonable risk to the marine environment. A non-conforming ship may or may not need to be detained.

---

13. Security Boarding

a. A security boarding is the examination by an armed boarding team of a vessel arriving at or departing a U.S. port to deter acts of terrorism and/or transportation security incidents, and may include an examination of the cargo, documentation, and persons on board.

b. COTPs may order a security boarding for vessels engaged in domestic operations if intelligence or other law enforcement information warrants.

c. The U.S. Coast Guard Maritime Law Enforcement Manual, COMDTINST M16247.1 (series), contains specific information on security boarding types and procedures.

d. A security boarding is not synonymous with the term “examination” or “compliance examination”.

---

14. Substandard Ship

In general, a ship is regarded as substandard if the hull; machinery; or equipment, such as lifesaving, firefighting and pollution prevention equipment; is substantially below the standards required by U.S. laws or international conventions, due to the following:

a. The absence of required principal equipment or its arrangement.

b. Gross noncompliance of equipment or equipment arrangement with required specifications.

c. Substantial deterioration of the vessel structure or its essential equipment.

d. Noncompliance with applicable operational and/or manning standards.

e. Clear lack of appropriate certification or demonstrated lack of competence on the part of the crew.

If the presence of any of these factors could endanger the ship, persons on board, or present an unreasonable risk to the marine environment, the ship is a substandard ship and should be detained until corrective measures are taken.

---

15. Valid Certificates

Valid certificate means a certificate that--

a. Has been issued by a contracting government, party to a convention, or on the behalf of the government or party by a recognized organization;

b. Contains accurate and effective dates;

c. Meets the provisions of the relevant convention; and

d. Corresponds to the particulars of the vessel and its equipment.

Note: PSCOs should review the International Maritime Organization's FAL.5/Circ.39 on guidelines for the use of printed versions of electronic certificates.

D. ISSUANCE OF SOLAS CERTIFICATES TO FOREIGN VESSELS

The Coast Guard issues SOLAS 74 certificates in accordance with the Convention to foreign vessels only in cases of emergency.

E. EXAMINATION TEAMS

PSC examination teams should, at a minimum, contain two members. One member must be a Port State Control Officer (PSCO) certified with the appropriate competency (qualification). The second member should, at a minimum, be certified as a Port State Control Examiner (PSCE).

a. Teams conducting Priority I exams and Certificate of Compliance exams (including initial, annual, renewal, and semi-annual exams) must include a PSCO who is an officer, chief warrant officer or GS-11 or above certified with the appropriate competency. The GS-11 requirement does not apply to those Civilian Apprentice Marine Inspectors that possess the training, education, and experience at least on par with a junior officer or chief warrant officer.

b. Teams conducting Priority II or Non-Priority cargo ship exams as well as Caribbean Cargo Ship Safety Code (CCSSC) exams should include a PSCO that is an officer, chief warrant officer or GS-11 or above certified with the appropriate competency. If those personnel are unavailable, the PSCO role must be filled, at a minimum, by a petty officer (E6 or above) or civilian (GS-9 or above) certified with the appropriate competency.

c. Other vessel compliance activities such as ballast water exams, ISPS exams, and Deficiency Checks may be completed by petty officers of lesser rank or civilians (GS-7 or above), provided they are certified as a PSCE.

d. The vessel type-specific Port State Control qualifications (Foreign Freight Vessel Examiner, Foreign Tank Vessel Examiner, Foreign Chemical Tank Vessel Examiner, Foreign Gas Carrier Examiner, and Foreign Passenger Vessel Examiner) are not restricted to any particular rank or rate. High performing Petty Officers may still earn these qualifications and conduct vessel-type specific portions of PSC exams.

e. When deciding the size of the team necessary (including trainees) to perform an exam, the PSCO should consider the type of exam and vessel particulars (type, size, etc). Unless a larger team is agreed to by a vessel's owner or operator in advance, in no case should team size exceed the following:

(1) Freight vessels, chemical and tank vessels and gas carriers: maximum of five persons.

(2) Passenger ship exams: maximum of eight persons.

Note: In some instances, a National Center of Expertise member, Coast Guard Travelling inspector, auditor, or other technical expert may be participating in an exam. These additional participants do not count towards the size of the PSC exam team.

---

1. At Sea PSC Exams

To ensure the safety of the PSC exam team, taking into account the required competencies needed to complete the exam, operational commanders retain the discretion to staff the exam team based on the operational situation, including the use of law enforcement qualified personnel, as necessary.

---

2. On-the-Job Training (OJT)

OJT for regular and reserve personnel is encouraged, however, delaying vessels as a result of Coast Guard training initiatives must be avoided. Unless an agreement is reached with a particular vessel owner or operating company, low priority vessels should not be examined just to meet Coast Guard training needs. Unless a larger number is agreed to by a vessel's owner or operator in advance, the number of trainees accompanying an exam team should be limited to 1 or 2 so as not to overwhelm a vessel's crew or create undue confusion aboard the vessel.

F. PSC EXAMINATIONS

1. Types of PSC Examinations

a. Generally there are three types of compliance examinations conducted on foreign vessels:

(1) PSC Safety and Environmental Protection Compliance Examination, which checks how vessels comply with safety and environmental protection regulations and conventions;

(2) International Ship and Port Security (ISPS)/Maritime Transportation Security Act (MTSA) Security Compliance Examination, which checks how vessels comply with security regulations and conventions; and

(3) Non-Convention Security Compliance Examination (for foreign vessels that need to comply with domestic regulations, but not international conventions), which checks how vessels that are not subject to SOLAS comply with security regulations and conventions. Refer to NVIC 04-03 for details.

b. PSC and Security Compliance exams should be completed together. Unless specifically stated otherwise, for the purpose of MSM Volume II, Material Inspection, COMDTINST M16000.7 (series), Section D, hereafter the term “exam” includes PSC, ISPS/MTSA and Non-convention security compliance exams. The frequency of each exam is normally determined using unclassified compliance verification matrices.

c. Any of these exams may be broadened into an expanded examination. Expanded exams should focus on the areas where "clear grounds" have been established and should not include other areas or systems unless the general impressions or observations support such an exam.

d. In addition to the three exam types mentioned above, other Coast Guard activities involving foreign vessels include deficiency follow-ups, monitors of oil or hazardous materials transfers, and cargo supervision of explosives or radioactive materials transfers.

(1) Deficiency follow-up. An exam performed to ensure previously identified deficiencies have been corrected. A deficiency follow-up may be limited in scope to an exam of the specific deficiencies identified during a previous exam.

(2) Monitor. The process of witnessing any part of a bulk or break-bulk cargo operation, bunkering operation, or lightering operation.

(a) The monitor must focus on the procedural and operational aspects or human element of the transfer and need no occur during critical phases (starting, topping off, or securing of transfer operations).

(b) Monitors should be conducted in conjunction with exams or deficiency follow-ups.

(3) Cargo supervision: the process of supervising explosives or radioactive materials transfers.

(a) Cargo supervision differs from monitors in that the Coast Guard team must be present during the entire transfer.

(b) Special requirements for the cargo carried must be enforced.

(c) Vessels carrying military and commercial explosives must comply with 49 CFR Subpart G. Further guidance is contained in MSM Volume II, Material Inspection, COMDTINST M16000.7 (series), Chapter F5.

(d) Vessels carrying highway route controlled quantities of radioactive material must comply with 49 CFR Subpart I and 49 CFR Subpart M. Further guidance is contained in MSM Volume II, Material Inspection, COMDTINST M16000.7 (series), Chapter F5.

NOTE: For specific guidance applicable to foreign passenger vessels, see MSM Volume II, Material Inspection, COMDTINST M16000.7 (series), Chapter D7.

For specific guidance applicable to foreign tank vessels, see MSM Volume II, Material Inspection, COMDTINST M16000.7 (series), Chapter D6.

For specific guidance applicable to foreign freight vessels, see MSM Volume II, Material Inspection, COMDTINST M16000.7 (series), Chapter D5.

---

2. Cargo Ship Safety Certificate (CSSC)

The 1988 Protocol to SOLAS 74 allows flag States to issue a Cargo Ship Safety Certificate (CSSC) in lieu of the present Cargo Ship Safety Equipment (SEC), Construction (SCC), and Radio Certificates (SRC). The CSSC is similar to the Passenger Ship Safety Certificate (PSSC), except that it is valid for up to 5 years while the PSSC is valid for only 1 year. The

CSSC requires annual endorsements. CSSC's shall be accepted if they are properly endorsed and not expired.

---

3. Procedures Applicable to Vessels of Non-Parties and Vessels to which Conventions do not Apply

Article II (3) of SOLAS 74/78, Article 5(4) of MARPOL 73/78, and Article X (5) of STCW provide that no more favorable treatment is to be given to vessels of countries that are not party to these conventions.

a. Vessels of foreign nations not party to SOLAS and vessels below convention size. Vessels of foreign nations not party to SOLAS and vessels below convention size may be inspected in accordance with U.S. vessel inspection statutes and regulations (46 U.S.C. 3301).

(1) In the course of such inspections, due consideration should be given to acceptance of materials and equipment that do not conform exactly to the requirements of U.S. regulations.

(2) Masters, owners, and agents of foreign vessels must forward written applications for inspection to the cognizant OCMI.

(3) A vessel that satisfactorily completes inspection shall be issued a U.S. Certificate of Inspection (COI), as prescribed in 46 CFR 2.01-5.

(4) In lieu of performing an inspection for certification for vessels of foreign nations not party to SOLAS or vessels below convention size, OCMIs may perform a PSC examination. When assessing whether a PSC examination is appropriate, the following factors should be considered:

(a) Size and type of ship;

(b) Equipment provided;

(c) Type of cargo; and

(d) Vessel certificates and documents carried that were issued on behalf of their flag State.

(5) The PSC Exam should follow the procedures of this chapter and International Maritime Organization (IMO) Resolution A.787(19), Procedures for Port State Control (as amended), to verify that an equivalent level of safety and protection of the marine environment is achieved.

(6) The condition of the vessel, certification of the crew, and the flag administration's minimum manning standard must be compatible with the objectives of the Convention and U.S. laws and regulations.

b. Vessels of countries not party to MARPOL 73/78. See 33 CFR 151.21 for guidance regarding vessels of countries that are not party to MARPOL 73/78.

---

4. Canadian Vessels

Under 46 U.S.C. 3303, vessels with a valid COI issued by a flag State that has inspection laws and standards similar to those of the United States are subject only to an inspection to ensure that the condition of the vessel's propulsion equipment and lifesaving equipment are as stated on the certificate. Currently, only Canadian vessels are recognized as having laws and standards similar to those of the United States.

On 29 March 1995, reciprocity was extended to Canadian barges that carry oil in bulk. These barges will no longer be subject to inspection under 46 CFR Subchapter D when operating in U.S. waters with valid Canadian Letters of Compliance. Such vessels continue to be subject to all other applicable laws and regulations. As with all foreign flagged tank vessels, Canadian oil barges operating in U.S. waters will be subject to annual tank vessel examinations and must possess a valid Certificate of Compliance issued in accordance with 46 U.S.C. 3711.

---

5. Taiwanese Vessels

Taiwanese vessels are issued non-convention certificates that attest to compliance with all SOLAS requirements. Such certificates are considered to have force equal to that of SOLAS certificates. Accordingly, Taiwanese vessels need not undergo inspection for certification.

---

6. Caribbean Vessels under 500 GT

As of 1 January 1998, freight vessels under 500 Gross Tons (GT) trading to U.S. ports within the Seventh District must have a flag State certificate attesting to compliance with the new vessel standards of the Caribbean Cargo Ship Safety Code. Alternatively, a foreign flagged freight vessel less than 500 GT operating in the Caribbean region may submit to an inspection by the Coast Guard, leading to the issuance of a COI that will authorize limited service in U.S. waters. The basis for the inspection will be the standards contained in the Caribbean Cargo Ship Safety Code, unless inspection under U.S. regulations is requested. The Caribbean Cargo Ship Safety Code can be accessed via the Commandant (CG-CVC-2) Workspace on CG Portal.

G. PSC EXAMINATION PROCEDURES

PSCOs must examine the vessel to the extent necessary to determine whether the vessel is in substantial compliance with the international conventions adopted and enforced by the U.S. (SOLAS, MARPOL, STCW, ICLL, Tonnage 69). Foreign vessel examinations may be initiated by the Coast Guard, requested by another flag State administration on the basis of information regarding a potential substandard ship, or based on information regarding a substandard ship provided by members of a ship's crew, a professional body, an association, a trade union or any other involved individual. Other flag States must have information regarding a potential substandard ship in order to request a foreign vessel examination.

PSC examinations are not intended, nor desired, to be analogous to inspections for certification of U.S. flagged vessels. PSC examinations are intended to be of sufficient breadth and depth to satisfy a PSCO that a vessel's major systems comply with applicable international standards and domestic requirements, and that the crew possesses sufficient proficiency to safely operate the vessel. The examination should determine if the vessel’s required certificates are aboard and valid, and if the vessel conforms to the conditions required for issuance of required certificates. This is accomplished by a walk-through examination and visual assessment of a vessel's relevant components, certificates, and documents, as well as limited testing of systems and the crew. If the examination reveals questionable equipment, systems, security or crew, the PSCO may expand the examination to conduct operational tests or more in depth examinations, as appropriate. The PSCO should become familiar with IMO Resolution A.1052(27), “Procedures for Port State Control”, before conducting any PSC examination. A PSC examination consists of the specific procedures outlined in the freight, tank, or passenger vessel examination books. Although every PSC exam should include both an ISPS/MTSA compliance exam and a PSC Safety and Environmental Protection Compliance Exam, procedures for each are provided separately below. At a minimum, the items discussed in the following paragraphs must be part of each type of PSC examination.

1. Items Expected to be Part of a PSC Examination

a. Security. Since the ISPS Code plays a significant role in establishing whether security measures are in place on board a vessel, every PSC exam should include both an ISPS/MTSA compliance exam and a PSC Safety and Environmental Protection Compliance Exam. On occasions when the PSCO only conducts a PSC Safety and Environmental Protection Compliance Exam, the following elements of the ISPS Code must still be checked, as they assist in determining the security risk that a vessel poses to the United States:

(1) Determine the security level at which the vessel is operating. The ship's security level must be at least as high as that set at the intended port of call. If the ship is at a lower security level than the port, the ship must take steps to set its security level at least as high as that set at the arrival port.

(2) Verify the International Ship Security Certificate (ISSC) is on board and valid. The ISSC, if current, is valid unless there is evidence or reliable information that the vessel is not in compliance with the requirements of SOLAS Chapter XI-2 and the ISPS Code. Refer to Paragraph H.3 below for a detailed discussion regarding the validity of the ISSC.

(3) Review the Continuous Synopsis Record (CSR). The PSCO should bring a copy of the information supplied in the Notice of Arrival (NOA) and review the CSR to verify that the CSR information matches the NOA information.

(a) While verifying this information, the PSCO should check similar information on other documents, such as the Passenger Ship Safety Certificate, International Oil Pollution Prevention Certificate, and Cargo Ship Safety Construction Certificate, to ensure consistency with the CSR.

(b) Lack of a CSR is not grounds for detention, denial of entry, or expulsion.

(4) Review the records of security threats, incidents, and security breaches to determine if any security related incidents have occurred in the vessel's recent history. If so, the PSCO should determine the details of the incident in order to assess whether it is relevant to the current port visit or if it poses any potential threat to the vessel's current security posture.

(5) Verify that the Ship Hull Identification number is permanently marked and matches the number listed on the ISSC. PSCO may do this immediately prior to the examination.

b. Structure. The PSCO should develop an impression of hull maintenance and the general state of the deck and side shell to determine if it is fit for service and route intended.

(1) Deck portion. The PSCO should examine the condition of such items as ladderways, guardrails, fire mains, piping, hatch covers, watertight and weather tight closures, and deck plating. Areas of extensive corrosion or pitting should influence the decision as to whether it is necessary to make the fullest possible examination of the structure with the vessel afloat.

(2) Hull portion. Significant areas of damage, cracking, wastage, corrosion, or pitting of plating and associated structural members in decks and hull affecting material fitness or strength to take local loads may justify detention. When practical, the PSCO should examine internal structural members visible from deck in open cargo bays or upper wing tanks. This is particularly important for bulkers more than 10 years old. The PSCO should be vigilant to evidence of improper temporary repairs, soft patches, recent welding or other repair work, and seepage from fuel, cargo, or ballast tanks and side shell plating.

(3) Ballast tank entry. Due to concern for personal safety, entry into ballast tanks is no longer part of a PSC Safety and Environmental Protection Compliance Examination for chemical tankers, liquefied natural gas carriers, and liquid petroleum tankers. See MSM Volume II, Material Inspection, COMDTINST M16000.7 (series), Chapter D6 for policy on annual ballast tank entry and examination on foreign oil tankers over 10 years old.

(4) Load lines. The PSCO should pay particular attention to closing appliances, the means of freeing water from the deck and keeping water outside the hull envelope, and arrangements for the protection of the crew. Items such as defective hatch closing arrangements, multiple missing dogs, corroded vents, and wasted coamings may warrant further examination.

(5) Material condition not affecting the vessel's service and route intended. Damage not affecting the material condition of the vessel does not constitute grounds for judging that a vessel should be detained, nor does damage that has been temporarily but effectively repaired for a voyage to a port for permanent repairs. However, in assessing the effect of damage, the PSCO should regard the location of crew accommodations and whether the damage substantially affects habitability.

(6) Voyage damage. If the vessel is taking appropriate action with the classification society and/or flag Administration to address voyage damage without prompting from the Coast Guard, the COTP/OCMI should not consider detaining the vessel.

(a) The COTP may employ other control measures, (i.e. requiring tug assists, daylight transits, portable pumps or generators etc.) through a COTP order in these cases.

(b) However, if the vessel is not taking appropriate action to address voyage damage or it appears that the vessel intends to depart port in a material condition affecting the vessel's service and route intended, the OCMI or COTP should consider taking immediate steps to detain the vessel.

(c) The COTP/OCMI may evaluate proposed substitution of life rafts for a damaged lifeboat (with the approval of the Flag Administration, or other organization that issued the Safety Equipment Certificate), to ensure that 100 percent of the crew will be accommodated, provided that another boat (rescue or lifeboat) is available for marshalling rafts.

c. Machinery spaces. The PSCO should assess the condition of the machinery and the electrical installations such that they are capable of providing sufficient continuous power for propulsion and auxiliary services.

(1) Operation. The PSCO may determine if responsible personnel are familiar with their duties related to operating machinery such as:

(a) Emergency and standby electrical power sources;

(b) Auxiliary steering gear;

(c) Bilge and fire pumps; and

(d) Any other equipment essential in emergency situations.

(2) Maintenance. During examination of the machinery spaces, the PSCO should form an impression of the standard of maintenance. Frayed or disconnected wires, disconnected or inoperative reach rods, quick closing valves or machinery trip mechanisms, missing valve hand wheels, evidence of chronic steam, water and oil leaks, dirty tank tops and bilges, extensive corrosion of machinery foundations, or a large number of temporary repairs, including pipe clips or cement boxes may be indicative of poor maintenance.

(3) Tests and trials. While it is not possible to determine the condition of vital machinery without performance trials, the PSCO may only require operational tests or trials if there is objective evidence that the machinery does not operate.

(4) Oil and oily mixtures. By taking into account the quantity of oil residues generated, the capacity of sludge and bilge water holding tanks, the capacity of the oily water separator, and reviewing the oil record book, the PSCO may determine if the vessel uses reception facilities and note any alleged inadequacies of reception facilities.

(5) Sufficient power. If one electrical generator is out of commission, the PSCO should investigate and test whether power is available to maintain essential and emergency services.

(6) Remote shut-off valve for tanks less than 500 liters. Regulation II-2/15.2.5 of

SOLAS 74 (amended) requires every fuel oil pipe from a storage, settling, or daily service tank to be fitted with a means to secure flow from outside the space in which the tank is situated.

(a) The United States accepts the IMO interpretation of SOLAS II-2/15.2.5 that was adopted at the 69th session of the Marine Safety Committee in May 1998.

(b) Therefore, vessels with emergency generator fuel tanks installed on or after May 14, 1998, of 500 liters (0.500 cubic meters) and greater must have valves installed that meet this regulation. Existing installations with a capacity of 500-1,000 liters (0.500-1.000 m^3) are grandfathered.

d. Navigation safety equipment check. The PSCO should examine vessel navigation equipment required by SOLAS Chapter V and 33 CFR Part 164, paying particular attention to the equipment requirements tied to the vessel's gross tonnage. The PSCO should also determine operator competence and whether all equipment was working properly during the last voyage. If required equipment is not working, the PSCO should determine when the vessel will complete repairs. If a major piece of electronic equipment (like the radar or Automatic Radar Plotting Aid (ARPA)) is not operational, the PSCO should contact the COTP or OCMI for direction. The PSCO should conduct a thorough check of the bridge and navigation spaces for compliance with the Navigation Safety Regulations (33 CFR Part 164) and ask to have the electronic equipment operating if cargo operations permit. The PSCO should check the complete list of navigation safety items, paying special attention to the extra requirements for vessels over 10,000 GT. The PSCO should check or test the equipment, paying particular attention to the following:

(1) Position Fixing Device (LORAN C, Satellite Navigation System (SATNAV) or GPS). The PSCO should have the crew operate the equipment. The PSCO should check that the receiver is able to lock on and track the signals for these readings. For SATNAV, the PSCO should verify that the Mate is able to set up the receiver to obtain the vessel's position on the next usable satellite pass.

(2) Automatic Radar Plotting Aid (ARPA). The PSCO should ensure that each vessel over 10,000 GT is equipped with an ARPA as required by the Port and Tanker Safety Act and the Navigation Safety Regulations. The PSCO should take the time to spot targets on the screen and to follow a vessel's movement across the screen, if possible.

(3) Echo Depth Sounder and Recorder. The PSCO should have the crew operate the equipment to see if it gives a reading. The recorder should show recent performance if it was operational as the vessel entered the harbor.

(4) Marine radar. The PSCO should have the crew operate the radar and note targets moving across the screen or pick out shore objects on the radar, if possible. The PSCO should check both radars on vessels over 10,000 GT, including true north stabilization features.

(5) Vessel FM radio. The PSCO should ensure that the vessel has the capability to use VHF Channels 13, 16, and 22 and that the radios are in working order. A radio check is not necessary unless the PSCO suspects that the radios do not work.

(6) Magnetic steering compass. The PSCO should check to see if there is a current deviation table posted near the magnetic compass. The vessel derives the table by swinging the vessel through 360 degrees and recording readings that compare the vessel's true, gyro and magnetic north compass readings. The magnetic compass can vary depending on the type of cargo loaded and it may show differences from voyage to voyage. The PSCO should check the emergency steering compass periscope, if fitted, to ensure that you can see the card. The PSCO should check compass illumination.

(7) Gyrocompass. The PSCO should check the reading on the steering gyrocompass against the repeaters on the bridge wings, the second steering station and the steering engine room. The PSCO should be aware that vessels sometimes secure gyrocompasses during an extended port stay. The PSCO should look at the comparison log for any fluctuations between the gyro, magnetic and true readings.

(8) Bridge navigational watch alarm system (BNWAS). The PSCO should verify that the BNWAS is installed, given the implementation dates outlined in SOLAS Chapter V, Regulation 19.

(9) Rudder angle indicator. The PSCO should check the rudder angle indicator in all locations such as main steering station, bridge wings, and emergency steering station. They should all have the same reading. A few degrees variance is acceptable.

(10) Navigation information.

(a) Charts. Check charts of the transit areas within the COTP zone to ensure the vessel maintains up-to-date charts.

[1] Use a list of the most recent Defense Mapping Agency (DMA) Notice to Mariners changes to verify that chart corrections are up-to-date.

[2] Foreign charts are acceptable if they contain similar information and are of a large enough scale to permit safe navigation.

[3] Electronic charts forming part of an ECDIS system are acceptable if these are up-to-date and the system includes a suitable back-up approved by the Administration conforming to the standards in IMO Resolution A.817 (19).

[4] NVIC 9-83 provides additional guidance regarding application of the requirements for carriage of charts.

(b) Publications. Vessels must carry a currently corrected copy of, or applicable currently corrected extract from, the U.S. navigation publications (or foreign equivalents) listed in 33 CFR 164.33. See NVIC 9-83 for further enforcement guidance. Publications required include the following:

[1] U.S. Coast Pilot.

[2] Coast Guard Light List.

[3] Tide tables.

[3] Tidal Current Tables or River Current Publication.

(11) Relative motion plotting equipment. While the ARPA may do some of the relative motion plotting for the vessel personnel, the vessel still must have equipment for manual plotting of relative motion. Normally this equipment consists of maneuvering boards, triangles, parallel rules, etc.

e. Cargo vessel safety construction items. The general condition of the vessel may lead the PSCO to consider matters associated with the safety of the vessel other than those concerned with safety equipment and assignment of load lines. This involves the effectiveness of items associated with the Cargo Ship Safety Construction Certificate, which can include hatch coamings and covers, pumping arrangements, means for shutting off air and oil supplies in the event of fire, alarm systems, and emergency power supplies.

f. Cargo ship safety radio operation. The PSCO may accept the Cargo Ship Safety Radiotelegraphy, Safety Radiotelephony Certificate, or Cargo Ship Safety Radio Certificate as proof of the provision and effectiveness of its associated equipment. The PSCO should spot check equipment for proper operation and ensure that appropriate certified personnel are on board for its operation and for listening periods.

The PSCO should examine the radio log to confirm that the vessel maintains mandatory safety radio watches.

g. Equipment in excess of convention or flag State requirements. Crews may use excess equipment on board in situations affecting safety or pollution prevention. Accordingly this equipment must be in proper operating condition. If excess equipment is inoperative, the vessel may repair it or remove it from the vessel. If neither is practical, the vessel may clearly mark excess equipment as inoperative and store the equipment in a location not reserved for safety equipment.

h. Garbage. The PSCO must spot check the garbage management plan and garbage record book to verify compliance with the operational requirements of Annex V of MARPOL 73/78. The PSCO may determine if reception facilities are involved and note any alleged inadequacy of such facilities.

i. Manuals and instructions. The PSCO should determine if appropriate crewmembers understand the information given in manuals and instructions relevant to the safe condition and operation of the vessel and its equipment. The PSCO should determine whether crew members are aware of requirements for maintenance, testing, training drills, and required logbook entries.

j. STCW 95/2010 Amendments. STCW sets qualification standards for masters, officers, and watch personnel on seagoing merchant ships.

(1) For specific guidance regarding enforcement and examination procedures refer to Commandant (CG-3PCV) Policy 02-04, “Policy for the Enforcement of the 1995 Amendments to the International Convention of Standards of Training, Certification and Watchkeeping for Seafarers, 1978, (STCW 95).”

(a) With multinational crews, the responsibility for crew competency, which once fell only on flag States, may involve several parties that issue certificates. Under the new rules, the party issuing the original certificate must comply with the requirements of the Convention, and the flag State may issue a separate "recognition" certificate, or endorsement, only after confirming that the issuer of the original certificate complied with Convention requirements for certificate issue. The PSCO should check that mariners hold licenses or certificates issued or endorsed by the flag State.

(b) The 1995 Amendments strengthen the PSC provisions of the STCW Convention by expanding the grounds on which a port State may detain a foreign ship. This allows the PSCO to look beyond merchant mariner’s certificates and conduct direct assessments of the competence of merchant mariners. Accordingly, the PSCO should assess mariner competency during

the PSC examination. Refer to NVIC 3-98 for more details conducting competency assessments.

(c) Rest periods. To address the problem of crew fatigue, the 1995 STCW Amendments require that every person assigned duty as an officer in charge of a watch or as a rating, forming part of a watch, should receive a minimum of 10 hours of rest in any 24-hour period. These 10 hours of rest may include two rest periods as long as one segment is at least 6 hours long, with strictly limited exceptions. The PSCO should ask questions and examine the watch list to ascertain whether the crew is given adequate rest periods.

(d) The 1995 STCW Amendments require that seafarers receive familiarization training and basic safety training. Basic safety training includes basic firefighting, elementary first aid, personal survival techniques, personal safety, and social responsibility. This training ensures that seafarers are aware of the hazards of working on a vessel and can respond appropriately in an emergency. The PSCO should ask questions and ascertain whether the crew has received this basic training.

(e) The 1995 STCW Amendments require training on use of ARPAs and Global Maritime Distress Safety System (GMDSS) for deck officers serving on vessels equipped with those systems. In cases where a vessel is not fitted with those systems, the license and STCW endorsement would state that limitation. The PSCO should ask questions and ascertain whether the deck officers have received this training, as applicable.

(f) The 1995 STCW Amendments require that the vessel's master and deck officers have a thorough understanding of bridge teamwork procedures. The PSCO should observe bridge teamwork if onboard during maneuvering.

(g) The revised technical regulations specify minimum standards of competence for the range of certificates issued under STCW. STCW presents the standards in tables with four columns: 'competence' or ability to be established; area of 'knowledge, understanding and proficiency' within each competence; 'methods of demonstrating competence;' and 'criteria for evaluating competence.' The 1995 STCW Amendments also promote the use of simulators as one of the recognized means for demonstrating competence. The Coast Guard is developing standards, procedures and performance measures for use by designated examiners to evaluate competence in various areas. The PSCO should become familiar with these regulations since they pertain to the assessment of mariner's competency.

(h) Roll-On Roll-Off (RO-RO) passenger ships. The 1995 STCW Amendments included new Regulations (V/2) on training and qualification for masters,

officers, ratings and other personnel on RO-RO passenger vessels. IMO developed these regulations as a matter of urgency following the sinking of the ferry ESTONIA. A subsequent set of amendments in 1997 adds similar Regulations (V/3) on personnel serving on passenger ships other than RO-RO passenger ships. The PSCO should take note of these requirements when examining a RO-RO passenger vessel.

(i) On January 1, 2012, the 2010 Manila amendments to the STCW Convention and Code entered into force. These amendments include a number of important changes including updated medical fitness standards with medical certificates valid for two years, addition competency requirements for personnel serving aboard all types of tankships, a new electro-technical officer endorsement, and new requirements for security-related training and documentation. Certain amendments include a 5-year transitional period with full compliance required by January 1, 2017. Generally, amendments that involve the certification of seafarers are subject to the transitional provisions while amendments that do not involve the certification of seafarers applied January 1, 2012. PSCOs should refer to STCW.7/Circ.17 for guidance on the implementation and transitional provisions of these amendments.

k. ISM Code. Compliance with SOLAS Chapter IX and the ISM Code is mandatory for certain vessels engaged on an international voyage. The objectives of the ISM Code are to ensure safety at sea, prevent the occurrence of human injury or loss of life, and avoid environmental and property damage. Specifically, the ISM Code seeks to address the issues of human error and human omissions.

(1) To accomplish its objectives, the ISM Code requires owners of ships, or other organizations such as the managers, or bareboat charterers, who have assumed responsibility for ship operations, to implement Safety Management Systems (SMS) for their ships and companies.

(2) During the PSC examination, the PSCO should apply the guidance contained in NVIC 04-05 regarding the enforcement of ISM and examination details.

l. International Labour Organization (ILO) 147. During exams, the PSCO should be alert for especially hazardous or unsanitary conditions. With respect to labor laws, the Coast Guard cannot hold other countries to the same standards it applies to domestic vessels. The PSCO should be alert to those conditions that are blatantly unsafe. The PSCO may relay labor or pay complaints to the attention of the vessel’s flag State or the Department of Labor by contacting Commandant (CG-CVC-2). Where intervention authority is lacking, local humanitarian or religious organizations (i.e. Seamen's Friends Society) may be able to assist in correcting unsanitary practices or in assisting crewmembers. See The Merchant Shipping (Minimum Standards)

Convention, 1976 (ILO 147) and Port State Control (PSC), COMDTINST 16711.12A for further guidance.

m. Cargo Operations. The PSCO should check the following items regarding cargo operations:

(1) Spot check containers and packaged cargo for proper marking, labels, and placards.

(2) Look for damaged or leaking cargo containers and packages, particularly forklift punctures or evidence of crushing that may indicate dropped packages.

(3) Look for potential ignition sources, particularly from electrical equipment, smoking violations, stowage plan, and cargo segregation.

(4) Determine if the vessel has a capacity to retain all oily waste and oily bilge slops generated while operating in U.S. waters.

(5) Check to see that no oil or hazardous material is carried in prohibited spaces.

n. Cargo Securing Manual (CSM). As of December 31, 1997, Administration-approved CSMs became mandatory under SOLAS 74, Ch. VI/5, and VII/6 for all cargo vessels engaged in international trade which are equipped with cargo securing systems or individual cargo securing arrangements. NVIC 10-97 provides amplifying information on CSM.

(1) Cargo vessels found without an approved CSM must be required to provide a CSM prior to the next U.S. voyage. For vessels with dangerous goods/hazardous materials cargoes already aboard, PSCOs must evaluate the vessel's securing arrangements for the dangerous goods/hazardous materials cargoes. In cases where the PSCO finds dangerous goods/hazardous materials cargo securing insufficient, appropriate corrective action must be required prior to the vessel's departure.

(2) For cargo vessels that return to U.S. ports without CSMs on subsequent voyages, the following actions may be necessary:

(a) SOLAS Detention until the vessel's owner or operator formally establishes a reasonable timeline for submittal of a CSM to the vessel's Administration or authorized representative;

(b) Notification to the vessel's Administration and/or recognized organization that the vessel is in violation of SOLAS 74, Ch. VI/5 and VII/6; and

(c) Prevention of future cargo operations at all U.S. ports until the vessel owner or operator provides proof of compliance with SOLAS 74, Ch. VI/5 and VII/6 CSM requirements.

o. On deck. While on deck, the PSCO should check the following:

(1) Fuel piping. Note the general condition of the fuel piping systems (including manifolds), particularly any temporary repairs and other irregularities.

(2) Fuel vents. Check the material condition of the fuel vents. There is no SOLAS requirement for fuel tank vent screens.

(3) Closure mechanisms. Examine closure mechanisms for cargo hatches, side ports, watertight doors and other openings that maintain the seaworthiness of the vessel.

(4) Cargo stowage. Ensure that stowage and securing arrangements for on deck containers are adequate and that cargo segregation is in compliance with 49 CFR 176.83.

(5) Lifesaving equipment. The PSCO must spot-check the vessel's lifesaving equipment. Observe the condition of the lifeboats paying particular attention to the hull and davits.

(a) The effectiveness of lifesaving equipment depends heavily on good maintenance by the crew and their use in regular drills. The lapse of time since the last survey or Safety Equipment Certificate can be a significant factor in the degree of deterioration of equipment.

(b) Apart from failure to carry equipment required by a convention or obvious defects such as holed lifeboats, the PSCO should look for signs of disuse of or obstructions to boat launching equipment that may include paint accumulation, seizing of pivot points, absence of greasing, condition of blocks and falls, and improper lashing or stowing of deck cargo. Life raft stowage and missing weak links are common problems that vessels may correct quickly without detaining the vessel. See MSM Volume II, Material Inspection, COMDTINST M16000.7 (series), Chapter D5 for more information.

(6) Firefighting equipment. The PSCO must review the vessel's fire control plan and note the adequacy and condition of firefighting equipment.

(a) The PSCO should check the fire stations to ensure that there are hoses, extinguishers, fixed CO^2 systems, and other firefighting equipment on the vessel as indicated in the fire control plan and/or general arrangement plan. The PSCO should examine the fire detection and sprinkler systems, if applicable. The fire main and pumps should be tested by charging the system and witnessing the pressure at widely separated deck stations simultaneously.

(b) It is not necessary for the PSCO to spend time at every station as long as he/she is able to ensure the vessel's readiness to respond to a fire.

(c) The PSCO should examine international shore connections for condition and proper number. Fire mains and hydrants in poor condition and the absence of fire hoses and extinguishers in machinery or accommodation spaces point to a need for close inspection of fire safety equipment.

(d) In addition to compliance with convention requirements, the PSCO should look for evidence of a higher than normal fire risk, such as a lack of cleanliness in the machinery space (excessive oil in bilges) or significant deficiencies of fixed or portable fire extinguishing equipment, that may lead the PSCO to conclude the vessel is substandard.

(e) PSCOs should not require servicing of hand portable extinguishers by servicing contractors unless obvious deterioration is present. The fact that more than 1 year has elapsed since the last servicing date is not, by itself, sufficient to require servicing.

[1] Fire doors. Fire spread may accelerate if fire doors are not readily operable. The PSCO should examine the doors in main zone bulkheads, stairway enclosures, and boundaries of high fire risk spaces, such as main machinery rooms and galleys, for their operability and securing arrangements. The PSCO should pay particular attention to doors retained in the open position and those in main vertical zones to ensure these will completely close during a fire emergency. The PSCO should look for obstructions that may prevent fire doors from closing and ensure they are removed.

[2] Ventilation systems. An additional hazard in the event of fire is the spread of smoke through ventilation systems. PSCOs should spot check dampers and smoke flaps to ascertain the standard of operability. Ensure that ventilation fans can be stopped from the master controls and that means are available for closing main inlets and outlets of ventilation systems.

[3] Escape routes. The PSCO should examine the effectiveness of escape routes by ensuring that vital escape doors are open and that alleyways and

stairways are free of obstruction.

(7) Pollution prevention equipment. PSCOs should verify compliance with the Pollution Prevention Regulations (33 CFR Parts 155, 156, and 159) and MARPOL Regulations (Annexes I, II, V and VI) (See 33 CFR Part 151, COMDTINST M16450.30 and Annex VI Policy Letter 09-01 for further guidance). During examinations, the PSCO should complete an in-depth look at the vessel pollution prevention requirements including examination of fuel and lubricating oil systems, waste oil handling systems, oil or liquid hazardous material transfer procedures (as applicable), garbage handling procedures, declarations of inspection, and marine sanitation devices. At a minimum, the PSCO should do the following:

NOTE: Some of the below items may only apply to vessels carrying oil or liquid hazardous material as cargo (i.e., in deep tanks) or engaged in bunkering.

(a) Examine the small discharge containment and visually check the capacity. Have someone demonstrate the mechanical means of closing scuppers and drains in the containment, and confirm means of draining or removing discharged product from the containment.

(b) Examine the fuel and bulk lubricating oil discharge containment. Visually check the capacity. (i.e., 1/2 barrel 300-1,600 GT, 1 barrel over 1,600 GT, 5 U.S. gallon portable container for 100-300 GT, and 100 GT or over if constructed before July 1974).

(c) Examine the bilge water piping outlet (MARPOL connection). (1,600 GT and above on each side of the weather deck; below 1,600 GT accessible from the weather deck). Make sure the vessel has a means to stop each discharge on the weather deck near the discharge outlet.

(d) Ensure the vessel meets requirements for ballast discharge if the vessel uses ballasted fuel tanks.

(e) Locate the emergency shutdown system. If possible, have the emergency shutdown system activated to ensure proper operation.

(f) Check the vessel's required transfer communications. (Continuous two-way voice between persons-in-charge of the transfer operation.) Ensure that they are intrinsically safe;

(g) Visually inspect required deck lighting. Check the transfer point and transfer operation work area.

(h) Check the transfer hoses. The minimum design burst pressure for each hose assembly must be at least four times the sum of the pressure of the relief valve

setting (or four times the maximum pump pressure for systems without relief valves) plus the static head pressure of the transfer system at the point where the hose is installed.

[1] Check the hose working pressure. The Maximum Allowable Working Pressure (MAWP) for each hose assembly must be more than the sum of the pressure of the relief valve setting (or the maximum pump pressure for systems without relief valves) plus the static head pressure of the transfer system, at the hose installation point.

[2] Check the hose labeling. Check to see that each hose is marked with the required information.

(m) Ensure appropriate signage. Locate the "Discharge of Plastic and Garbage Prohibited" placard.

p. Engine Room. In engine room, the PSCO should do the following:

(1) Check the Oil-Water Separator (OWS) for a certification label with a CG approval number or International Maritime Organization (IMO) specification label (MARPOL 73/78).

(2) Check the bilge continuous monitor for an CG approval number or IMO specification label and sight the recording tape.

(3) Check and operationally test the OWS as outlined in MSM Volume II, Material Inspection, COMDTINST M16000.7 (series), Chapter E1.

(4) Verify that the "Discharge of Oil Prohibited" placard is posted as required in each machinery space, bilge, and ballast pump control station.

(5) Verify that the vessel is equipped with an operable, U.S. Coast Guard or MARPOL IV certified Marine Sanitation Device (MSD).

(6) Check the bilges. Check for presence of oil or hazardous material and confirm structural integrity.

q. Cargo control area on tankers. In cargo control area on tankers, the PSCO should do the following:

(1) Verify that the vessel has a list of designated PICs for each type of transfer operation (bunkering, cargo).

(2) Closely examine the bulk liquid transfer procedures. Ensure that the procedures--

(a) Are legibly printed in a language understood by personnel engaged in the transfer operations;

(b) Are permanently posted or available where they can easily be seen and used by crewmembers;

(c) Contain a list of each oil or liquid hazardous material transferred (generic name, product information, and applicability of transfer procedures);

(d) Include an accurate description of each transfer system on the vessel (including a line diagram, the location of the shutoff valves, and description of and procedures for emptying the discharge containment system);

(e) Specify number of persons required to be on duty for transfer is indicated with the duties, by title, of each person required for each transfer operation;

(f) Include procedures and duty assignments for tending the vessel's moorings during transfer;

(g) Include procedures for operating the emergency shutdown and transfer communications, topping off tanks, ensuring that all valves used during the transfer operation are closed on completion of the operation, and reporting fuel or cargo spills (discharges);

(h) Include, in the front of the transfer procedures, any exemptions or alternatives granted; and

(i) Include appropriate amendments.

(3) Confirm that the emergency shutdown is operable from the cargo control area.

r. Drills. The PSCO should witness drills during all PSC Safety and Environmental Protection Compliance Exams (e.g. PI, PII, Random, Certificate of Compliance).

(1) Abandon ship drill. For abandon ship drills, the PSCO should do the following:

(a) Verify that the crew is properly mustered at their stations and check muster lists for accuracy. Check that the crew has properly donned lifejackets. Determine if crew members are able to communicate with each other. Ensure that crewmembers are familiar with abandon ship procedures/duties and the proper use of ship's lifesaving equipment.

(b) Lower lifeboats, when practicable, to the embarkation deck. Conduct a general examination of davits, falls, sheaves, etc., as the boat is being prepared and lowered to the embarkation deck. Verify that the lifeboat engines start properly. With the exception of passenger ships undergoing control verification examinations, do not require crews to lower, release, and exercise lifeboats in the water.

(c) During the drill, the PSCO should be satisfied that the crew is competent to safely embark and launch lifeboats and liferafts designated as primary lifesaving equipment in the times specified by SOLAS (10 minutes after the abandon ship order for a cargo ship and 30 minutes after the abandon ship order for a passenger ship).

(d) If the PSCO determines the crew is unfamiliar with their duties or incapable of safely operating the lifesaving equipment, halt the drill and notify the vessel's master that the drill was unsuccessful and that additional training and/or additional exercises are necessary. The PSCO should then provide the crew with at least one additional opportunity to demonstrate competency before detaining a vessel.

(e) If crew performance warrants vessel detention, the PSCO should cite the crew's lack of familiarity with essential shipboard operations under SOLAS XI-1/4 as the reason for detention and detail specific observations that led to the failure.

(f) The PSCO may also deem drills unsatisfactory if language barriers interfere with adequate verbal communication, or if the crew is unable to perform a satisfactory and safe drill, in spite of additional instruction and additional opportunity to demonstrate competency.

(2) Fire drill. The PSCO should witness a fire drill and evaluate the ability of the crew to respond to emergencies. The safety officer or the officer in charge should specify the location and scope of the drill.

(a) The PSCO should determine if the drill is of sufficient scope to demonstrate crew competence. All crewmembers, except those engaged in cargo operations or on watch, should participate.

(b) The PSCO should observe the alarm indication on the fire alarm panel and the responses of the vessel's officers. (A normal procedure is to send an officer or fire patrolman to investigate.) The PSCO should go to the location and describe the fire situation (smoke, flames, etc.) to the investigator and then observe how the crew reports the fire to the bridge or damage control center.

At this point, most vessels will sound the crew alarm to summon the firefighting parties and the remainder of the crew to their stations.

(c) The PSCO should also observe the firefighting party arriving on scene, breaking out their equipment, and fighting the simulated fire. Team leaders should be giving orders as appropriate to their crews and passing word back to the bridge or damage control center on the conditions.

(d) The PSCO should examine the firefighting team for proper donning of protective equipment and for proper use of their equipment. Officers should make sure that all of the firefighting gear is compatible; e.g., firefighters can properly wear the protective suit, the helmet, the air mask and breathing apparatus, and the lifeline. Merely mustering the emergency crews with their gear is not acceptable.

(e) If the PSCO determines the crew is unfamiliar with their duties or incapable of safely responding to a shipboard fire, halt the drill and notify the vessel's master that the drill was unsuccessful and that additional training and/or additional exercises are necessary. The PSCO should then provide the crew with at least one additional opportunity to demonstrate competency before detaining a vessel.

(f) If lack of performance warrants vessel detention, the PSCO should cite the crew's lack of familiarity with essential shipboard operations under SOLAS XI-1/4 as the reason for detention.

(g) The PSCO may deem drills unsatisfactory if language barriers interfere with adequate verbal communication, or if the crew is unable to perform a satisfactory and safe drill, in spite of additional instruction and several opportunities to demonstrate competency.

(3) Inability to Conduct Drills. In very limited cases, it may not be possible to conduct the required fire and abandon ship drill. The circumstances for not witnessing a drill must be exceptional. Bunkering operations or poor weather are potentially valid reasons for not conducting the abandon ship drill. If extenuating circumstances preclude a drill, but the ship is clearly well run based on its condition, documentation, and crew proficiency during other portions of the exam, PSCOs are not required to witness the drill. In these cases, PSCOs should include a statement in the MISLE narrative that drills were not conducted, the reason why, and how crew proficiency was satisfactorily determined. PSCOs should not issue a deficiency in these cases nor should they request the unit at the vessel's next port of call to witness drills. However, if there are reasons to doubt the crew's proficiency, the PSCO should work with the master to identify an

appropriate time to conduct drills when the exceptional circumstances are no longer present.

s. Steering. Steering gear failures on all classes of foreign vessels have caused serious marine casualties and pollution incidents in U.S. waters. The PSCO should witness a steering system test. The test should include the following:

(1) An operational check of the main and auxiliary steering from each remote steering gear control system and each steering position on the navigating bridge.

(2) Test the main steering gear from the alternative power supply, if installed (i.e. the feeder cable to the steering gear fed by the emergency switchboard);

(3) Verify the reading on the bridge gyrocompass matches the repeater in the after steering room;

(4) Verify the rudder angle indicator in the after steering room has the same reading as the indicator on the bridge;

(5) Test each remote steering gear control system power failure alarm and each steering gear power unit failure alarm;

(6) Test for full movement of the rudder according to the required capabilities of the steering gear;

(7) Test the means of communication between the navigating bridge and the steering gear compartment;

(8) Visually inspect the steering gear and its connecting linkage, paying particular attention to securing devices that may loosen due to vibrations; and

(9) Check for indications of potential failures involving excessive leakage of hydraulic fluid; looseness in hydraulic piping and hose connections, fasteners, or couplings; frayed electrical wiring or evidence of arcing; unusual noises during operation; or evidence of insufficient maintenance. Examples of the latter include makeshift repairs, painted-over lube fittings, and deficient maintenance that might adversely affect operation of the steering gear.

(10) For additional guidance on examining steering gear and the importance of examining steering gear linkage, hose and piping connections, refer to MSM Volume II, Material Inspection, COMDTINST M16000.7 (series), Chapter C4.

t. Anti-Fouling Systems. PSCOs should verify compliance with the International Convention on the Control of Anti-fouling Systems on Ships (AFS).

(1) Basic Examination, Convention Vessels. PSCOs should examine the International Anti-fouling Systems (IAFS) Certificate and, if appropriate, the attached Record of Anti-fouling Systems (ROAFS).

(a) The IAFS Certificate should be in conformity with Appendix 1 to Annex 4 of the AFS Convention and indicate whether an anti-fouling system controlled under Annex I of the AFS Convention has or has not been applied, removed, or been covered with a sealer coat, and whether an anti-fouling system controlled under Annex I of the AFS Convention was applied on the vessel prior to or after the date specified in the AFS Convention.

(b) The IAFS Certificate should be properly completed and endorsed by the Administration or recognized classification society.

(c) The ROAFS should be up to date and include the attached records from drydockings related to AFS or sealer coat applications. Further, information on the ROAFS should agree with that shown on the IAFS Certificate.

(2) Basic Examination, Non-Convention Vessels. PSCOs should ascertain whether the vessel is in compliance with the AFS Convention and may accept a Statement of Voluntary Compliance (SOVC), or an equivalent certification, issued by the flag Administration or a Recognized Organization on its behalf. This documentation should contain all of the information required in an IAFS Certificate and the associated ROAFS. Otherwise, the basic examination for these vessels is similar in scope to AFS Convention vessels. For status of the conventions, and which Administrations have not ratified the AFS Convention, see http://www.imo.org/About/Conventions/StatusOfConventions.

(3) Expanded Examination. During any examination, the examination team should expand the examination if “clear grounds” are established that the vessel is not in compliance with the AFS Convention. The following, among other things, constitute clear grounds for conducting an expanded examination into AFS Convention compliance:

(a) There is no evidence of compliance with the AFS Convention (e.g. missing IAFS Certificates or SOVCs).

(b) The IAFS Certificate or SOVC contains irregularities (for example, the painting or coating dates on the certificate do not agree with vessel

drydocking dates, there are numerous paint patches on the visible portion of the underwater hull, or the IAFS Certificate is not properly completed).

(c) Credible reports have been found or made of the vessel's non-compliance with the AFS Convention.

(d) Evidence that actual hull coatings are not consistent with those described on the IAFS Certificate, ROAFS, Declaration, or SOVC.

(e) Extensive growth observed on a vessel's hull. (Note: this may be influenced by a range of factors including design, construction, ratio of time underway, trading routes, maintenance history and hull cleaning practices).

(4) Violations. If a vessel is in violation of the AFS Convention, The COTP may warn, detain, or exclude the vessel from port.

(a) Deficiencies indicating non-compliance with the AFS Convention may result in an examination deficiency and shall be documented on the Form B and in MISLE. Correction of such deficiencies may be deferred until the vessel's return after sailing foreign or until the next regularly scheduled drydocking based on the nature of the deficiency.

(b) The COTP may issue a Letter of Warning to a vessel that has AFS Convention deficiencies.

(c) In cases where the deficiencies related to the anti-fouling system are more substantive, the COTP should detain the vessel under the AFS Convention. Such cases could include instances where the vessel has a controlled anti-fouling system installed and it is not properly sealed, the IAFS Certificate is invalid or missing, or the vessel's master admits non-compliance with the AFS Convention. The notification procedures in MSM Volume II, Material Inspection, COMDTINST M16000.7 (series), Section D, Chapter 2 must be followed in the event of a detention.

---

2. Expanding the Examination

During any examination, the PSCO should expand the exam of a vessel if there is "clear grounds" that the vessel, its equipment, or its crew, do not correspond substantially with the particulars of its certificates. Expanded exams should focus on those areas where "clear grounds" exist and should not include other areas or systems unless the general impressions or observations of the PSCO support such exam.

---

3. Documenting the Examination

Units shall document all PSC examinations with the Coast Guard Port State Control Report of Inspection Form A, CG-5437A and Coast Guard Port State Control Report of Inspection Form B, CG-5437B, if the latter is applicable, in accordance with the instructions on the respective forms. This includes Certificate of Compliance exams with the exception of exams taking place under domestic authority outside of 12 nautical miles (overseas, lightering zones, etc.). Additional details can be found on the instructions page of the Certificate of Compliance, Form CG-3585.

a. The Port State Control Report of Inspection is the single most important document the Coast Guard issues to foreign vessels. It provides documentation to the various parties associated with a foreign vessel and other port States on the outcome of Coast Guard PSC examinations.

b. This report receives attention at high levels within the Coast Guard and foreign government agencies. Therefore the report must clearly articulate the reasons for detaining substandard vessels for safety and environmental compliance deficiencies or detaining, expelling from port, or denying entry to port a substandard vessel for maritime security deficiencies. To accomplish this, the report must outline a deficiency description that shows substandard conditions and list appropriate authority under the international conventions for each deficiency to support the action taken.

c. PSCOs must enter all deficiencies identified during PSC exams on the Coast Guard Port State Control Report of Inspection Form B, including minor deficiencies corrected on the spot.

d. MSM Volume II, Material Inspection, COMDTINST M16000.7 (series), Section D, Chapter 2 provides examples of substandard conditions that merit vessel detention, expulsion from port or denial of entry.

e. For all deficiencies, the description must be a direct and succinct statement that should contain two important elements. First, the description should state the standard the ship does not meet. Second, the description should explain how the ship does not meet the requirement.

f. When drafting the Coast Guard Port State Control Report of Inspection Form B, the PSCO should record deficiencies in order of severity, listing detainable items or more serious SOLAS-based deficiencies first. Additionally, the PSCO should order deficiencies based on U.S. regulations and ILO standards last.

g. For deficiencies requiring correction prior to departure, the COTP/OCMI may choose one of several methods to verify correction prior to departure.

(1) For the most serious deficiencies that contributed to a vessel's detention, a PSCO should revisit the vessel and verify correction prior to departure. If a PSCO is unavailable, the COTP/OCMI may accept Administration certification that deficiencies are corrected. Depending upon the circumstances, the COTP/OCMI may also accept certification from the Recognized Organization that the vessel has corrected these items.

(2) The Coast Guard has not approved certain Classification Societies to "review, examine, survey, or certify the construction, repair, or alteration of a vessel in the United States" pursuant to 46 USC 3316(c). Accordingly, a Classification Society that has not received Coast Guard approval may not review, examine, survey, or certify repairs necessary to clear deficiencies noted during a PSC exam.

(a) If such repairs are necessary before a vessel served by a non-approved Classification Society may depart from port, the Coast Guard may verify repairs as appropriate.

(b) Alternatively, the Administration or an approved Classification Society may survey repairs as appropriate.

(c) Note this law does not mean that the Coast Guard should not accept previously-issued statutory certificates issued on behalf of the Administration by a non-IACS Classification Society that has not received Coast Guard approval. Nor does this law prohibit a non-IACS Classification Society that has not received Coast Guard approval from reissuing statutory certificates to a vessel when the vessel visits the United States. Further, the law does not prohibit any activities related to a vessel's safety management system. For more information concerning approval of Non-IACS Classification Societies, consult with Commandant (CG-ENG-1).

(3) For less serious deficiencies, the COTP/OCMI may accept certifications from the vessel's master, Classification Society (excepting non-approved, non-IACS Classification Societies), or Administration that the vessel has corrected the deficiencies.

h. In rare instances, multiple day exams may be necessary. In these cases, PSCOs should issue the Coast Guard Port State Control Report of Inspection Forms A and B prior to departing the vessel each day. The Form A should include a note at the bottom: "Examination to continue. Deficiencies identified are not all inclusive." If additional deficiencies are found the following day, a new Form B must be issued and

dated the day it is issued. Block 10 of the Form A should be updated to reflect the multiple day exam.

i. For exams that lead to a vessel's detention, PSCOs must fill out the Coast Guard Port State Control Report of Inspection Form A in its entirety, to include information on the last survey for the relevant certificates. This information is critical in determining whether a classification society should be associated with the detention, directly impacting the Port State Control targeting matrices.

H. SECURITY COMPLIANCE EXAMINATION PROCEDURES: ISPS/MTSA SECURITY COMPLIANCE EXAMINATION AND NON-CONVENTION VESSEL SECURITY COMPLIANCE EXAMINATION.

PSCOs must also examine the vessel to the extent necessary to determine whether the vessel is in substantial compliance with SOLAS Chapter XI-2 and the ISPS Code, Part A, taking into consideration the guidelines of the ISPS Code, Part B. The PSCO should become familiar with MSC Circular 1111, "Guidance Relating to the Implementation of SOLAS Chapter XI-2 and the ISPS Code." The PSCO must take into consideration the clear distinction between flag State inspection and PSC (i.e., certifying vessel compliance with SOLAS Chapter XI-2, the ISPS Code, and MTSA versus verifying general compliance with SOLAS Chapter XI-2 and the ISPS Code through spot checks and visual observations of security implementation on the vessel).

If a PSCO has clear grounds that a particular vessel's security arrangements do not substantially meet the requirements, then the PSCO should take control action, which may include a more detailed inspection (expanded examination) into the area of non-compliance. Although the PSCO is onboard the vessel for the purpose of an ISPS/MTSA security compliance exam, the PSCO should be alert to serious safety deficiencies and may expand the examination into such deficiencies. The PSCO should permit the vessel to begin cargo operations, bunkering, or taking on ships stores at a reasonable point during the exam since observing security measures taken during these operations is part of the ISPS/MTSA compliance exam. The PSCO should also consider the following when performing ISPS/MTSA security compliance examinations.

---

1. Vessel Security Level

The PSCO should determine the security level at which the vessel is operating. The ship security level must be at least as high as that set at the intended port of call. If the ship is at a lower security level than the port, the ship must raise its security level at least as high as that set at the arrival port.

---

2. Non-Compliant Ports and Ports with Inadequate Anti-Terrorism Measures

The Coast Guard's International Port Security Program assesses whether effective anti-terrorism measures are in place using the country's compliance with SOLAS Chapter XI-2 and the ISPS Code as the primary determinant. If the Coast Guard determines that effective anti-terrorism measures are not in place, it may impose Conditions of Entry. When Conditions of Entry are imposed, the Coast Guard posts a Port Security Advisory on the Homeport website at http://homeport.uscg.mil and also publishes a Federal Register Notice. The COTP/OCMI should take actions against vessels that have called at non-compliant ports in accordance with any Port Security Advisories in effect and in accordance with other promulgated policy, usually provided by message. For detailed information on the International Port Security Program, refer to International Port Security Program, COMDTINST 16618.7.

---

3. Verify ISSC

The PSCO should verify that the ISSC is on board and valid. The PSCO should verify that the original ISSC is on board the vessel and that the flag Administration or RSO has properly endorsed the ISSC. If the ship has an interim ISSC, confirm that the reason for interim certification is in agreement with one of the valid reasons specified in Section 19.4.1 of the ISPS Code, Part A, and that the conditions for interim certification outlined in Sections 19.4.2 – 19.4.6 of ISPS Code, Part A, are satisfied (For Non-SOLAS foreign flag vessels, see Paragraph C.8 below). Do not accept a copy of the ISSC.

---

4. Verify Ship Security Performance

The PSCO must verify that the Ship's Security Plan (SSP) is approved by the flag Administration or an RSO on behalf of the flag Administration. The SSP should be on board the vessel or kept in an electronic format and protected from unauthorized disclosure. The PSCO should confirm the SSP is written in the working language, or languages, of the crew, and, if this language is not English, French or Spanish, that a translation into one of these languages is available. The SSP is not generally subject to inspection; however, the PSCO should observe security procedures, ask questions and review security records to determine whether there are non-conformities related to vessel security. If there are clear grounds for believing that the vessel does not have required security procedures in place, or is otherwise in violation of security provisions specified in the SSP, the PSCO should investigate. As part of the investigation, the PSCO may examine the relevant sections of the plan after exhausting other means to determine compliance. The PSCO must obtain the consent of either the vessel's flag State or the master of the vessel, as specified in Paragraph 9.8.1 of ISPS Code Part A, before examining relevant portions of the SSP.

NOTE: the PSCO may not review security provisions addressed in Paragraph 9.4,

Subparagraphs .2, .4, .5, .7, .15, .17, and .18 of Part A of the ISPS Code, without the consent of the vessel's flag State.

The following is a discussion of each of the required elements of a SSP per Section 9.4 of ISPS Code Part A and verification procedures for each. Those elements with an asterisk are most effectively checked in port.

a. * Measures designated to prevent weapons, dangerous substances and devices intended for use against people, ships, or ports from being carried on board the vessel.

(1) The PSCO should observe procedures in place to determine whether security personnel are screening persons and their packages or baggage for weapons, dangerous substances, and devices, and whether security personnel show competence in these duties.

(2) If the PSCO notes that security personnel do not check persons and their packages or baggage, clear grounds exist for inspection of the vessel. This may include asking additional questions or checking relevant provisions of the SSP (with prior permission of the master). Note that in cases when the PSCO's baggage, equipment, or personal effects are not checked, the PSCO may not regard security personnel's failure to check the PSCO's baggage as a deficiency.

(3) The PSCO should ask security personnel tasked with these duties related questions such as the following:

(a) "At Security Level 1, do you check baggage or personal effects of all persons for weapons?"

(b) "How do you screen persons and their carry-on baggage from bringing on board unauthorized weapons?"

(c) "How do you intensify such screening as the security level (or MARSEC level) increases from security level 1 to 2 or from level 2 to 3?"

(d) "How do you segregate checked persons and their personal effects from unchecked persons and their personal effects?" (On cruise ships.)

(4) For cruise ships, the PSCO should also verify that the vessel meets the screening requirements contained in 33 CFR 104.295, which requires screening of all persons, baggage and personal effects at all MARSEC levels. In some cases, the cruise ship and the facility may share security responsibilities via a Declaration of Security or similar arrangement when facility security is performed by personnel

associated with the cruise line. In such cases, the facility may perform some of the security responsibilities normally performed by the ship.

(5) See the ISPS Code, Part B, Section 9.9 through 9.17 for additional guidance regarding this required element.

b. Identification of the restricted areas on board the vessel and measures for the prevention of unauthorized access to the vessel and to restricted areas.

(1) The PSCO should observe whether effective access control procedures, such as locks or guards, periodic security sweeps, escorts for visitors not authorized to access restricted areas, and surveillance equipment or intrusion devices (including seals or electronic devices) are in place for key spaces on board the ship including, but not limited to, the bridge, steering gear compartment, engine room, cargo control spaces, communications rooms, and similar spaces. When visitors or passengers are not on board, effective access control for restricted areas may be relaxed as specified in the approved ship security plan.

(2) The PSCO should observe that restricted areas are clearly marked, indicating that access to the area is restricted and that unauthorized access to the area is restricted. If the PSCO is able to access restricted areas without authorization, clear grounds exist for further inspection, which may include asking additional questions or checking relevant provisions of the SSP (with prior permission of the flag Administration).

(3) The PSCO should note that the SSP may authorize the PSCO to access restricted areas without escort. Absence of locked restricted areas is not a deficiency unless the SSP mandates locked spaces as the only means for control of access to restricted areas.

(4) The PSCO should ask security personnel tasked with these duties related questions, such as the following:

(a) “What methods do you use to prevent unauthorized individuals from accessing restricted areas such as the bridge, main engine room, steering compartment, cargo areas, and other control stations?”

(b) “Does your security plan permit credentialed PSCOs to access restricted areas without escort?”

(c) “How do you intensify actions to prevent unauthorized access to restricted areas as the security level (or MARSEC level) increases from security level 1 to 2 or from level 2 to 3?”

(d) "Does the ship use surveillance equipment in restricted areas and is this equipment continuously monitored?"

(5) For passenger vessels and ferries, the PSCO should verify that the vessel meets the applicable requirements related to security sweeps prior to getting underway as contained in 33 CFR 104.292.

(6) For cruise ships, the PSCO should verify that the vessel meets the applicable requirements related to security patrols and searching selected areas prior to embarking passengers and sailing contained in 33 CFR 104.295.

(7) See the ISPS Code, Part B, Section 9.18 through 9.24 for additional guidance regarding this required element.

c. * Measures for the prevention of unauthorized access to the ship. A vessel must have procedures for each security level for allowing access to the vessel and allowing persons to remain on the vessel.

(1) The PSCO may observe that: access control personnel are in place at all vessel accesses; other accesses to the vessel are secured; security personnel screen persons coming on board the vessel; and that the security personnel performing access control duties are knowledgeable. The PSCO should observe that crew with access control duties closely examine personal identification for validity and determine whether persons seeking to come on board have legitimate purpose to do so.

(2) The PSCO should expect the vessel to verify his/her credentials when accessing the vessel and should cooperate with vessel security personnel. The PSCO must not attempt to mislead vessel security personnel or test the vessel's access control using false identification cards or other deceptive means; such efforts are not acceptable. The International Maritime Organization has issued MSC/Circ. 1156 to provide guidance on public authority access to vessels which SOLAS Chapter XI-2 and the ISPS Code applies. PSCOs should follow these procedures when accessing ships. In accordance with these procedures, PSCOs should not be subject to searches by shipboard personnel when boarding a ship.

(3) If the PSCO notes that security personnel are not available to check or do not check persons as they board the vessel, the vessel may have other procedures in place and the PSCO has clear grounds for further inspection of these access control procedures, which may include asking additional questions of crew that have security duties, discussing this issue in detail with the Ship's Security

Officer (SSO) or checking relevant provisions of the SSP (with prior permission of the master).

(4) Note that an authorized check of the SSP may indicate frequency of access controls, ranging from random controls to 100 percent checks and an identification system. In all cases the vessel must conform to the SSP requirement. Note further that cruise ships must conduct 100 percent identification checks at all Security Levels (see 33 CFR 104.295).

(5) The PSCO should ask security personnel related questions to determine their familiarity with access control procedures, such as the following:

(a) "How do you identify persons coming on board and ensure they have a valid reason for being on board?"

(b) "How do you intensify such screening activities related to personal identification and valid reason to be on board as the security level (or MARSEC level) increases from security level 1 to 2 or from level 2 to 3?"

(c) "Have you identified the access points to the vessel when it is moored and how do you protect these areas against unauthorized access?"

(6) For passenger vessels and cruise ships, the PSCO should verify that the vessel meets the applicable requirements related to screening of persons contained in 33 CFR 104.292 and 104.295 which discuss security sweeps of vessels if left unattended, identification checks and confirmation of reasons for coming on board, and alternatives to identification checks and passenger screening.

(7) See the ISPS Code, Part B, Section 9.9 through 9.17 for additional guidance regarding this required element.

d. Procedures for responding to security threats or breaches of security, including provisions for maintaining critical operation of the ship or ship/port interface. This is a difficult subject for verifying compliance.

(1) The PSCO should ask security personnel with duties related to security response, and in particular, the SSO, related questions, such as the following:

(a) "Do you have procedures in place for security threats including bomb threats, unauthorized attempts to access the ship or its restricted areas, sabotage, terrorist or criminal activity?"

(b) "What, for example, is supposed to happen if someone attempted to gain unauthorized access to the bridge?"

(c) "If a breach of security occurs during passenger embarkation, what procedures are in place to mitigate the breach and to continue or suspend embarkation?"

(2) If the SSO is unclear about vessel response to security threats or breaches, clear grounds exist for further inspection, which may include asking additional questions or checking relevant provisions of the SSP (with prior permission of the flag Administration).

e. Procedures for responding to any security instruction a Contracting Government may give at security level 3. This is a difficult subject for verifying compliance. The security program of the vessel must address security procedures that apply at security levels 1, 2, and 3.

(1) The Contracting Government of the port at which the ship is located may require a vessel to take additional security measures at security level 3 and the vessel must have procedures or policy in place to comply.

(2) The PSCO should ask security personnel with duties related to increasing security posture, and in particular, the SSO, related questions, such as--

(a) "Do you have procedures in place to quickly respond to changes in security (or MARSEC) levels mandated by governments of ports at which the ship calls?"; and

(b) "Could you provide some examples?"

(3) If the SSO is unclear about vessel response to security threats or breaches, clear grounds exist for further inspection, which may include asking additional questions or checking relevant provisions of the SSP (with prior permission of the flag Administration).

(4) 33 CFR 104.240 mandates additional requirements including: notification to COTP when the vessel has achieved a mandated MARSEC level; timeliness requirements for achieving mandated MARSEC levels; notification and approval procedures for entering port when a vessel has not achieved mandated MARSEC levels; and additional physical security measures vessels must provide when the port is at MARSEC level 3. If the port is at security level 3, the PSCO should verify that the ship has complied with each security instruction (or MARSEC Directive) issued and these additional security measures.

f. Procedures for evacuation in case of security threats or breaches of security.

(1) If the PSCO notes that security personnel are unfamiliar with duties related to evacuation, clear grounds exist for further inspection, which may include asking additional questions or checking relevant provisions of the SSP (with prior permission of the Master).

(2) The PSCO should ask security personnel with duties related to evacuation questions, such as the following:

(a) "Do you have procedures in place to evacuate the vessel if the magnitude of a security breach or threat justifies this action?"

(b) "If so, how do you ensure passengers or visitors are accounted for?"

(c) "How do you interface with the port facility and contracting government during such an incident?"

g. * Duties of shipboard personnel assigned security responsibilities and of other shipboard personnel on security aspects.

(1) The PSCO should observe security personnel in the performance of their duties related to access to the vessel by crew members, passengers, visitors, contractors, delivery persons; control of restricted areas of the ship; handling of cargo; handling of ship's stores; handling unaccompanied baggage; and monitoring the security of the vessel to make a general determination regarding the competence of security personnel.

(2) The PSCO should ask security personnel questions that specifically relate to their security duties, such as the following:

(a) "When was the last time you participated in a security drill?", "What were your responsibilities during the drill?"

(b) "What are your responsibilities regarding (select one or more of the following: access control, screening baggage, safeguarding restricted areas, auditing the SSP, monitoring deck areas, etc.)?"

(3) For personnel not having specific security duties, the PSCO should limit questions to what these personnel do during security incidents, such as "What is your responsibility if there is a security incident on board?"

(4) The PSCO should ask similar questions to the SSO, and other questions regarding the specific SSO duties as outlined in ISPS Code, Part A, Section 12.2 on the following issues:

(a) Regular security inspections.

(b) Maintaining and supervising implementation of the SSP.

(c) Coordinating security aspects handling of cargo and ship's stores.

(d) Proposing modifications to the SSP.

(e) Reporting deficiencies and nonconformities to the Company Security Officer (CSO).

(f) Enhancing security awareness and vigilance on board.

(g) Ensuring adequate training for crew.

(h) Reporting all security incidents.

(i) Coordination of the SSP with the CSO and the port facility.

(j) Security equipment maintenance, testing, and calibration.

(5) If personnel are unclear about their security responsibilities, clear grounds exist for further inspection. This may include asking additional questions or checking relevant provisions of the SSP (with prior permission of the flag Administration). See MSM Volume II, Material Inspection, COMDTINST M16000.7 (series), Section D, Chapter 2 for potential actions if the SSO shows a profound lack of knowledge or incompetence.

h. Procedures for auditing the security activities. The PSCO should review vessel records pertaining to periodic internal audits of security procedures.

(1) New vessels or vessels that have had security plans for less than one year may not yet have had audits of security activities and this is not a deficiency.

(2) The PSCO should ask the SSO questions concerning frequency and procedures for SSP auditing, such as the following:

(a) "What are the basic steps for performing an audit of the security procedures?"

(b) "How often do you audit ship security procedures and are there instances that would cause you to review a specific security procedure?"

(c) "When is the next security audit due?"

(3) If the SSO is unclear about requirements for security auditing, clear grounds exist for further inspection, which may include asking additional questions or checking relevant provisions of the SSP (with prior permission of the vessel's master).

i. Procedures for training and exercises and drills associated with the plan. The PSCO should review security records related to security training, drills, and exercises to ensure that records are in place and that the ship is performing drills periodically as required by the ISPS Code (see ISPS Code Part A, Section 13.4).

(1) Note in particular the ISPS Code recommendation for quarterly drills and more frequent drills when the ship has significant crew changes (ISPS Code, Part B, Section 13.8).

(2) In addition, the PSCO should ask the SSO questions related to training, drills, and exercises, such as the following:

(a) "How often do you perform security drills?"

(b) "Could you describe the last security drill in which you participated?"

(c) "Do you have any requirements for on board security training?", or "When is the next drill due?"

(3) If there are no records of drills or if the SSO is unclear about requirements for drills, clear grounds exist for further inspection, which may include asking additional questions or checking relevant provisions of the SSP (with prior permission of the vessel master).

j. * Procedures for interfacing with port facility security activities. The PSCO should observe security procedures in place relative to the ship-to-ship or ship-to-port-facility interface.

(1) The PSCO should ask if the vessel has executed a Declaration of Security with the port facility or another ship (Note: Check 33 CFR 104.255 to see whether a Declaration of Security (DOS) is required for the vessel) and verify procedures if a DOS is currently in place.

(2) Further, the PSCO should ask to see any DOS executed in any of the vessel's last 10 port calls (refer to SOLAS Chapter XI-2, Reg. 9.2.3).

(3) The PSCO should also ask the SSO questions related to procedures for interfacing with port facility security activities, such as the following:

(a) "Does the vessel have a process for receiving information from Contracting Governments requiring them to execute a DOS with a port facility, and if so, please elaborate?"

(b) "Does the vessel have a process in place to execute a DOS with a port facility, and if so, please elaborate?"

(4) If the SSO is unclear about interfacing with other vessels and facilities and with DOSs, clear grounds exist for further inspection, which may include asking additional questions or checking relevant provisions of the SSP (with prior permission of the vessel's master).

k. Procedures for periodic review and update of the SSP. The PSCO should review security records related to SSP updates to ensure that the vessel performs security reviews.

(1) New vessels or vessels that have had security plans for less than one year may not yet have had a security review and this is not a deficiency.

(2) In addition, the PSCO should ask the SSO questions related to periodic SSP review, such as the following:

(a) "Does the vessel have a process for conducting periodic review of the SSP, and if so, please elaborate?"

(b) "When is the next periodic review of the SSP due?"

(3) If the SSO is unclear about reviewing and updating the SSP, clear grounds exist for further inspection, which may include asking additional questions or checking relevant provisions of the SSP (with prior permission of the vessel's master).

l. Procedures for reporting security incidents. The PSCO should also review security records to ensure the vessel updates these to include a history of security incidents and related communications.

(1) Note the absence of such records is not a deficiency if the vessel has not had a security incident.

(2) The PSCO should ask the SSO questions related to reporting specific types of security incidents, such as the following:

(a) "Does the ship have procedures for reporting security incidents, and if so, please elaborate?"

(b) "Has there been a recent security incident on board the vessel and, if so, what happened, what action was taken, and did these actions conform to the SSP?"

(3) If the SSO is unclear about reporting security incidents, or if there is evidence of an unreported security incident, clear grounds exist for further inspection, which may include asking additional questions or checking relevant provisions of the SSP (with prior permission of the vessel's master).

m. Identification of the SSO. Soon after arrival on board, the PSCO should identify the SSO.

n. Identification of the CSO, including 24-hour contact details. The PSCO should ask the SSO for the name and contact information of the CSO. The PSCO should not attempt to contact the CSO as part of the examination. If the SSO does not have clear instructions for contacting the CSO, clear grounds exist for further inspection, which may include asking additional questions or checking relevant provisions of the SSP (with prior permission of the vessel's master).

o. Procedures to ensure the inspection, testing, calibration and maintenance of any security equipment provided on board and frequency for testing and calibration. The PSCO should review security records related to inspection, testing and calibration of security equipment and frequency of related actions to ensure that the vessel performs this work.

(1) The PSCO should examine any security equipment observed on board for material condition.

(2) The PSCO should ask the SSO questions related to inspection, testing, calibration, and maintenance of security equipment, such as "Do you have any security equipment on board that requires periodic maintenance, calibration or testing and, if so, please elaborate?"

p. Identification of the ship security alert system activation point locations. This is a difficult subject for verifying compliance. The PSCO may attempt to observe security alert activation points on board the vessel. One of these must be located on the vessel's bridge. The PSCO must not ask vessel security personnel where the activation points are located unless there is evidence or reliable information (for example, an anonymous report from a crewmember) that the vessel does not have this

required system. See MSM Volume II, Material Inspection, COMDTINST M16000.7 (series), Section D, Chapter 2 for potential action if there is evidence that the ship security alert system is missing or inoperative.

q. Procedures, instructions and guidance on the use of the ship security alert system, including the testing, activation, deactivation and resetting. This is a difficult subject for verifying compliance.

(1) The PSCO should ask the SSO how the system works.

(2) The PSCO should not test this system unless--

(a) There is evidence or reliable information that this system is not operational; and

(b) The competent Authority designated by the Administration (see SOLAS Chapter XI-2, Reg. 6.2) is aware of, and acknowledges, the test beforehand.

---

5. Verify Conditions of Entry (if applicable)

If Conditions of Entry have been imposed, the COTP/OCMI should verify that the vessel took the requisite actions while in the foreign port. Conditions of Entry normally require vessels to implement additional security measures while in ports with inadequate anti-terrorism measures. These measures usually include taking actions consistent with Security Level 2, ensuring that all access points of the vessel are guarded, and attempting to execute a Declaration of Security with the port facility. The PSCO should interview vessel personnel and review vessel documentation to determine if COE were met to the satisfaction of the COTP/OCMI. Documents may include copies of a security company contract or payment receipt, log book entries, the Declaration of Security, and/or crew work hour logs.

---

6. The Continuous Synopsis Record (CSR)

The PSCO should bring a copy of the information supplied in the NOA and review the CSR to verify the CSR information matches the NOA information. While verifying this information, the PSCO should check similarly the other documents, such as Passenger Ship Safety Certificate, International Oil Pollution Prevention Certificate, Safety Management Certificate, Document of Compliance, and Cargo Ship Safety Construction Certificate, to ensure consistency with the CSR. Note: lack of a CSR is not grounds for detention, denial of entry, or expulsion.

---

7. Records

Vessels should keep security records outlined below on board for a period specified by the Contracting Government (at least the last 10 port calls for the information listed in SOLAS Reg. XI-2/9.2.1). The PSCO should request to view these records to verify that the vessel's security program meets specified security requirements. The PSCO should note that the vessel may maintain records in paper or electronic format and should protect these records against unauthorized disclosure. The PSCO should also review the security records to determine if the vessel visited non-compliant ports in its recent history (not to exceed 10 previous port calls). The PSCO must forward any information gathered on non-compliant port calls via a Field Intelligence Report (FIR).

a. Training, drills, and exercises. Vessels should keep records of the date, description of the on-board training, drill or exercise conducted, and a list of participants.

(1) The PSCO should note that records are not required for off-ship crew training. Verification of crew competence in security duties, and related responsibilities, is a more appropriate means of determining personnel have received appropriate training. ISPS Code, Part A, Section 13.4 requires security drills at appropriate intervals.

(2) Section 13.6 of the ISPS Code, Part B, recommends that a vessel hold quarterly security drills and also hold these drills in circumstances in which more than 25 percent of the crew has changed at any one time, with personnel that have not previously participated in a drill on that vessel within the past 3 months.

(3) The PSCO should require security drills as part of an inspection of the ship if there is evidence or reliable information that the vessel has failed to meet its periodic drill requirement.

(a) There is no requirement for individual vessels to participate in exercises; this is a higher level function involving local authorities, governments, company and port facility officers, and perhaps some SSOs.

(b) Lack of a record of exercises in ship security records does not constitute a deficiency or clear grounds for more detailed examination.

b. Reports of security incidents. Vessels should keep records of the date, time, location, and a description of the incident, and the associated ship's response.

c. Reports of security breaches. Vessels should keep records of the date, time, location, and a description of the breach, and the associated ship's response.

d. Changes in security levels. Vessels should keep records of the date, time, and location of the ship, and a description of changes to the vessel's security level.

e. Communications relating to the direct security of the ship. At a minimum, vessels should keep records of all communications pertaining directly to the security of the vessel. Communications include reports made to Contracting Governments and flag States concerning security threats and breaches, security instructions received by the ship from Contracting Governments and flag States, and any responses acknowledging such instructions. The PSCO should examine any report of security incidents and breaches and should find associated records of security communications. Similarly, the PSCO should examine records of changes in security levels, and should find associated records.

f. Internal audits and reviews of security activities. Vessels should keep records of audit and review dates, and the results of such audits and reviews.

g. Periodic review of the ship security assessments. Vessels should keep records of the dates of periodic reviews and the results of such reviews.

h. Periodic review of the SSP. Vessels should keep records of the date of periodic reviews and the results of such reviews. SSP review is an annual requirement.

i. Implementation of any amendments to the SSP. The vessel should immediately implement all SSP amendments approved by the Administration. The vessel should maintain documentation of such approvals on board and the PSCO should review such documentation. These records should include installation records of new security equipment installed after issuance of the original ISSC.

j. Maintenance, calibration and testing of security equipment. Vessels should keep records of the date and description of all maintenance, calibration, and tests of security equipment.

---

8. Manning

In establishing the minimum safe manning level of a vessel, the flag Administration should take into account the manning level of the vessel such that persons with responsibilities for safe navigation of the vessel do not have extensive security-related responsibilities. The PSCO should be sensitive to manning on board the vessel and if there is adequate personnel for both navigation responsibilities and security responsibilities. The PSCO should be satisfied that the vessel manning provides for crew work and rest hours established in STCW Chapter VIII as set by the Administration. For further guidance, refer to the ISPS Code, Part

B Section 4.28. In addition, see MSM Volume II, Material Inspection, COMDTINST M16000.7 (series), Section D, Chapter 2 for potential action if vessel manning does not provide adequate personnel to perform both security and navigation duties and meet crew rest requirements of STCW.

---

9. Non-Convention Vessel Security Compliance Examination.

Foreign cargo vessels that are not subject to SOLAS yet are above 100 gross register tons, as defined in 33 CFR 101.105, and vessels that would be subject to SOLAS, but are not because their flag States are non-signatory to SOLAS, must meet the requirements of 33 CFR Part 104 or be approved by the USCG to hold an ISSC issued by its flag administration as previously coordinated/approved with Coast Guard Headquarters. Non-SOLAS foreign commercial vessels subject to MTSA should have USCG-approved Vessel Security Plans (VSP) that meet the requirements of 33 CFR 104.405. As an equivalent, these vessels may have an Alternative Security Program (ASP), approved by the USCG, as discussed in 33 CFR 104.120(a)(3) and 33 CFR 104.140. Such vessels must have on board documentation attesting to USCG approval of its VSP, or ASP, as applicable. This would generally be in the form of a plan review approval letter from the MSC, or in the case of an ASP, an approval letter from Commandant (CG-5P).

Since the VSP is a Coast Guard-approved document, the PSCO may ask to look at the VSP when necessary to verify on board security processes. The PSCO must examine non-SOLAS foreign commercial vessels subject to MTSA for compliance with applicable maritime security requirements following the guidance contained in NVIC 04-03. For non-SOLAS foreign vessels that hold a valid ISSC, the PSCO must use the examination guidance contained in C.1 through C.7 above.

---

10. ISPS-related Deficiencies.

a. When the COTP/OCMI discovers ISPS-related deficiencies that render a vessel substandard, the COTP/OCMI should initiate a major control action. For additional information regarding vessel major control actions, see MSM Volume II, Material Inspection, COMDTINST M16000.7 (series), Section D, Chapter 2.

b. The PSCO must document deficiencies noted during the exam on the Port State Control Report of Inspection – Form B, CG-5437B. The PSCO should note the description of the deficiency in a direct and succinct statement that should contain two important elements.

(1) First, the description should describe the standard the ship does not meet.

(2) Second, the description should state why the ship does not meet the requirement.

(3) The PSCO should not describe deficiencies as an inspector would for a merchant vessel inspection requirement, Vessel/Facility Inspection Requirements, Form CG-835.

c. PSCOs shall only use cites from Part A of the ISPS Code or from SOLAS Chapter XI-2 when issuing ISPS-related deficiencies. Part B of the ISPS Code is guidance and must not be used as a primary deficiency cite.

d. When drafting the Form B, the PSCO should attempt to order deficiencies in order of severity, listing detainable items or more serious SOLAS-based deficiencies first.

I. EXAMINATION BOOKS

PSC exams must be conducted according to the guidance in the appropriate examination book available on Homeport or the CG Portal.

J. RECORD KEEPING

a. A file must be maintained on each foreign vessel examination which includes copies of examination books, Forms A and B (as applicable), detention reports, and related message traffic or other correspondence as directed by the Coast Guard Information and Lifecycle Management Manual, COMDTINST M 5212.12 (series).

b. Records documenting targeting and examination decisions do not need to be maintained, as the targeting scheme has been embedded into MISLE for auto-scoring.

c. If required boardings are missed, the notations should indicate why (e.g. hurricane, available boarding teams assigned to higher priorities, major oil spill, etc.).

CHAPTER 2: PROCEDURES APPLICABLE TO EXERCISING CONTROL OVER FOREIGN VESSELS UNDER US JURISDICTION

A. INTRODUCTION

The primary goal of the Port State Control (PSC) program is to eliminate substandard vessels (defined as a vessel whose hull, machinery, crew competence, or equipment, such as lifesaving, firefighting and pollution prevention equipment; is substantially below the standards required by U.S. laws or international conventions) from U.S. waters. One of the primary mechanisms to accomplish this goal is the identification of substandard vessels and subsequent notification to the global community. By notifying the global community of problem vessels, all countries with robust PSC programs can use this information to improve maritime safety and security.

Substandard vessels and vessels that may arrive from substandard ports pose safety or security threats to U.S. ports. The Coast Guard conducts PSC examinations and follows proper enforcement and control procedures to hold all maritime entities accountable. For example, if a unit issues a vessel a Captain of the Port (COTP) Order but not a formal IMO Detention, it is correcting the problem locally but not alerting the domestic and global communities that the vessel and its associated parties (flag, owner, class, etc.) may be substandard.

Furthermore, failure to take IMO authorized control actions when appropriate skews the Coast Guard's foreign vessel targeting methodology which is based upon historical detentions. Globally, failure to take IMO authorized control actions when appropriate, allows substandard vessels and their associated owners and operators to continue to operate without any restrictions.

Finally, this action can hinder the Coast Guard's ability to provide accurate statistics needed to gain congressional support for the program. This support hinges on the field's ability to maintain data integrity, quality control and to use the correct enforcement posture in each circumstance

B. AUTHORITY USED FOR CONTROL ACTION

Control actions must be based on the control authority provided under domestic laws or international conventions. Compliance with standards other than those implemented under law, regulation, or convention cannot be mandated. The OCMI/COTP and the examination team must thoroughly research requirements to ensure that any control action taken is authorized under an applicable law, regulation, or convention.

1. International Conventions

The United States is party to the following international instruments that provide authority for port States to exercise control procedures to secure compliance with applicable convention provisions:

a. SOLAS. SOLAS Chapter I, Regulation 19 authorizes port States to board foreign vessels to determine the validity of their SOLAS certificates. When "clear grounds" show that a vessel is not in compliance with applicable requirements, the port State is authorized to ensure that the vessel does not sail until it can proceed to sea or leave the port for the purpose of proceeding to a repair yard without danger to the vessel or persons on board.

b. International Convention on Load Lines 1966 (ICLL). ICLL Article 21(1) and (2) provide the port State with the authority to board foreign vessels to verify the validity of the vessel's certificate. The ICLL further authorizes the port State to determine that the vessel is not loaded beyond its allowable limits, that the position of the load line corresponds with the certificate, and that the vessel has not deteriorated or been altered such that it is manifestly unsafe to proceed to sea without danger to human life. The port State is authorized to take control as may be necessary to ensure that the vessel does not sail until it can proceed to sea without danger to passengers or crew.

c. International Convention for the Prevention of Pollution from Ships (MARPOL) 73/78. Article 5(2) provides port States with the authority to inspect foreign vessels to verify the validity of the vessels' certificates. Where "clear grounds" show that the vessel is not in compliance with the certificates, the port State is authorized to ensure that the vessel does not sail until it can proceed to sea without presenting unreasonable threat of harm to the marine environment.

d. International Convention on Standards of Training, Certification and Watchkeeping for Seafarers, 1978, as amended in 1995 (STCW 95). Ships may be detained under STCW authority if the vessel’s deficiencies pose a danger to persons, property, or the environment. Such deficiencies are described in STCW Regulation I/4. STCW Regulation 1/4 will be the only cite used if a detention is warranted.

e. International Safety Management (ISM) Code. Port States may detain a vessel for ISM Code deficiencies if the PSCO finds a major non-conformity during an expanded examination of a vessel’s Safety Management System. ISM-related detentions are done under the authority of SOLAS Chapter I, Regulation 19. If this occurs, the COTP or OCMI may request the flag Administration or authorized Recognized Organization to perform an external audit of the vessel. The COTP or OCMI should not expel a vessel from port based solely upon vessel non-compliance with SOLAS Chapter IX and the ISM Code.

f. International Labor Organization (ILO) Convention No. 147. Under article 4 of ILO 147, port States may take measures necessary to resolve any conditions on board a vessel that are hazardous to safety or health. The United States has not enacted special

legislation to execute this treaty because existing U.S. shipping and navigation laws encompass the treaty's provisions. The Ports and Waterways Safety Act (PWSA), 33 U.S.C. 1221 et. seq. authorizes the COTP to detain a vessel if it is not in compliance with an applicable treaty if the vessel poses a serious threat to the port. The general goals of ILO 147 may be used as a reference to measure the threat to the port. Additional guidance may be found in The Merchant shipping (Minimum Standards) Convention, 1976 (ILO 147) and Port State Control (PSC), COMDTINST 16711.12.

g. International Ship and Port Facility Security (ISPS) Code. SOLAS Chapter XI-2, Regulation 9, authorizes port states to board foreign vessels to determine the validity of their International Ship Security Certificate. Where "clear grounds" exist for believing that a vessel is not in substantial compliance with applicable requirements, the port state is authorized to impose any number of control measures, including inspection of the ship, delaying the ship, detention of the ship, restriction of operations (including movement within the port), expulsion of the ship from port, or denial of entry. A port state may impose lesser administrative or corrective measures. Any measures imposed shall be proportionate and directed at mitigating the security noncompliance.

h. International Convention on the Control of Harmful Anti-Fouling Systems on Ships (AFS Convention). The AFS Convention was adopted by the IMO to prohibit the use of harmful organotins in anti-fouling paints used on ships and to establish a mechanism to prevent the potential future use of other harmful substances in anti-fouling systems. Starting on November 21, 2012, foreign flagged vessels in the internal waters of the United States, in any port, shipyard, offshore terminal, or other place in the United States, lightering in the territorial sea of the United States, or anchoring in the territorial sea of the United States, must comply with the applicable portions of the AFS Convention. The type of anti-fouling systems controlled (prohibited) are specified in Annex 1 of the Convention.

---

2. U.S. Laws and Regulations

a. 46 U.S.C Chapter 701 (§§ 70101 through 70120): This authority, enacted by the Maritime Transportation Security Act (MTSA) of 2002 (P.L. 107-295), establishes a comprehensive security regime for vessels, facilities, and ports. This authority was promulgated via regulations found at 33 CFR Subchapter H (Parts 101 through 106). MTSA is the domestic implementing legislation for the ISPS Code and is broader in application, as it applies to vessels subject to SOLAS as well as foreign and domestic cargo ships over 100 GT. The regulations have a provision that foreign flag vessels with a valid International Ship Security Certificate will normally be deemed in compliance with the Coast Guard regulations. This authority also provides authority

for the International Port Security Program to impose conditions of entry on vessels arriving from ports not maintaining effective anti-terrorism measures.

b. Ports and Waterways Safety Act (PWSA) [33 USC 1221 et seq.]: PWSA provide broad authority in the areas of safety and environmental protection in ports, harbors, waterfront areas, and navigable waters. The anti-terrorism provision of the PWSA, 33 U.S.C. 1226, provides authority for the Coast Guard to take actions to prevent or respond to an act of terrorism against an individual, vessel, or public or commercial structure that is subject to the jurisdiction of the United States and located within or adjacent to the marine environment, or a vessel of the United States or an individual

onboard that vessel. Such actions to prevent or respond to acts of terrorism include, but are not limited to:

(1) Inspections;

(2) Port and harbor patrols;

(3) Establishment of security and safety zones; and

(4) Development of contingency plans and procedures.

The statute also expressly authorizes the Coast Guard to dispatch properly trained and qualified armed Coast Guard personnel on vessels and public or commercial structures on or adjacent to waters subject to United States jurisdiction to deter or respond to acts of terrorism or transportation security incidents.

c. Magnuson Act [50 USC 191]: The Magnuson Act is the national security law enforcement authority for the protection and security of vessels, harbors, and waterfront facilities. It is the primary authority for COTP Orders for vessels and facilities and authorizes actions to safeguard vessels and facilities against destruction, damage, or injury.

d. Special Local Regulations (SLR) [33 CFR 100.35]. These regulations, issued by the cognizant District Commander, establish safety zones for marine events.

e. Regulated Navigation Area (RNA) [33 USC 1231. with implementing regulations at 33 CFR Part 165]. These are safety zones established by the cognizant District Commander for emergency measures or unanticipated events.

f. Naval Vessel Protection Zone (NVPZ) [14 USC 91/33 CFR Part 165]. These regulations designate a 500-yard security zone around all naval vessels greater than 100 feet in length.

g. 46 USC 91. This statute requires that all vessels departing the U.S. for a foreign port and all foreign vessels departing one U.S. port for another U.S. port obtain U.S. Customs clearance. To ensure monetary satisfaction or surety for civil penalties, the PWSA, 33 USC 1232 gives the COTP or OCMI authority to request Customs to withhold or revoke clearance (commonly referred to as a "Customs hold"). The COTP should use this authority to withhold Customs clearance for vessels in cases where the vessel has not provided an appropriate Letter of Undertaking.

h. 33 CFR 164.55. This is the authority that allows the COTP or OCMI to grant deviations from any navigation regulation in 33 CFR Part 164.

C. VESSEL CONTROL PROCEDURES FOR SAFETY AND SECURITY

The COTP or OCMI shall institute appropriate control actions to safeguard the port, personnel, and the environment, when "clear grounds" exist and/or a vessel arrives from a port that does not maintain adequate anti-terrorism measures. Such actions should be appropriate to the deficiencies. When the deficiencies do not render a vessel detainable or, in the case of security, not subject to denial of entry or expulsion, the control actions should account for the vessel's effort to rectify such deficiencies immediately.

1. Control Options

a. Denial of Entry/Expulsion. Use this control option only when allowing a vessel into U.S. waters or when permitting a vessel to remain in U.S. waters would create an unacceptable level of risk, or an immediate threat to the port, personnel or the environment. This should not be the first choice in dealing with substandard vessels and should be limited to the most egregious circumstances. In some cases, a substandard vessel may already be in U.S. waters when a PSC exam initiates an IMO detention. Some of these cases may lead to expulsion of the vessel after it has met minimum specified standards to leave port.

Note that the COTP may not expel a vessel for safety considerations under the authority of SOLAS. The COTP may only expel a vessel for safety reasons under the authority of the Ports and Waterways Safety Act. The COTP may expel a vessel for security considerations under the authority of SOLAS. Examples of conditions that could warrant denying a vessel entry or expulsion from port include, but are not limited to, the following:

(1) Lack of onboard International Ship Security Certificate (or approved VSP

for foreign non-SOLAS vessels);

(2) Lack of an approved Ship Security Plan;

(3) Lack of an assigned Ship (Vessel) Security Officer;

(4) Ship (Vessel) Security Officer shows a profound lack of knowledge or incompetence with respect to implementation of the ship security plan (not knowing specific plan details does not merit denial of entry/expulsion);

(5) Arrival from a port in a country that does not maintain adequate antiterrorism measures and refusal to comply with any additional conditions of entry as a result of an arrival from the last port or ports of call (as directed by Commandant (CG-CVC-2));

(6) Submission of untimely or incomplete Notice of Arrival (NOA);

(7) Incompatible cargoes stowed in adjacent tanks;

(8) Cargoes being carried that are not authorized by the Certificate of Compliance;

(9) Serious cargo leaks from tanks or piping systems;

(10) LNG/LPG Gas detection system inoperative;

(11) Vessel carrying cargoes not authorized for carriage by the vessel's IMO documents;

(12) Lack of or expired ISM Certificates;

(13) Lack of valid Certificate of Financial Responsibility;

(14) Lack of an approved Vessel Response Plan; and/or

(15) Inert gas system deficiencies (under certain circumstances).

b. IMO Reportable Detentions. The COTP or OCMI may deem a vessel substandard when a PSCO finds clear grounds during a thorough PSC examination that it poses an undue risk to the crew, vessel, port, or environment. An IMO detention should be the primary course of action when there are clear grounds that a vessel subject to IMO instruments is substandard and corrective measures are necessary. Efforts by the Coast Guard to hold substandard vessels accountable have far reaching effects, not only for the Coast Guard's PSC program, but also toward meeting other international

member expectations. Note also that the Coast Guard tracks IMO detentions and uses detention information to target vessels that have a higher risk of being substandard due to past history or associations with higher risk owners, flag States, and Recognized Organizations. Refer to Chapter 2.D of this Section for specific examples of detainable deficiencies under their corresponding authorities.

c. Captain of the Port Order. A COTP Order is an important tool to protect the safety and security of the port. The COTP may use such an order to implement a variety of control actions, including controlling the vessel's movement as it enters or departs a port. The COTP may also use such an order to expel a vessel out of port. Also, there are potential civil and criminal penalties for violating a COTP Order. The COTP Order is not a substitute for pursuing and processing a detention under the applicable provisions of SOLAS, the ISPS Code, MARPOL, STCW, or the Load Line Convention.

(1) Controlling the Ship's Movement for Security. If there is a concern that the vessel poses a risk to the port or vessel from sabotage or other subversive acts, a COTP Order requiring the presence of armed escort personnel onboard the vessel during the transit is warranted. Note: COTP Orders issued for ISPS or MTSA related issues should be treated as Sensitive Security Information (SSI) and clearly marked as SSI to prevent inadvertent public disclosure or release under the Freedom of Information Act.

(2) Controlling the Ship's Movement for Safety. If the deficiency relates to the vessel's navigational equipment, the COTP Order might require an assist tug or may restrict a vessel to daylight operations. If the deficiency relates to pollution prevention equipment, the COTP Order may prohibit a vessel from bunkering or lightering until the vessel takes corrective measures.

(3) Controlling the Ship's Operations for Pollution Prevention. U.S. regulations pertaining to cargo handling and pollution prevention general apply to foreign vessels operating in U.S. waters. When deficiencies related to these U.S. regulations adversely affect the safety of cargo or bunkering operations but do not make the vessel unfit to proceed to sea, these operations may be prohibited or terminated until corrective measures are accomplished.

d. Customs Hold. Under the authority of 46 U.S.C. 91, vessels intending to depart the U.S. for a foreign port should obtain a clearance from Customs and Border Protection (CBP). If allegations exist that a vessel has violated certain U.S. safety and pollution laws, the Coast Guard may request that CBP deny or withhold the required clearance from the vessel until the vessel posts a letter of undertaking or surety bond. Before requesting a Customs Hold, the COTP or OCMI should encourage the vessel to obtain proper surety. In cases involving alleged violations of the MTSA regulations,

the COTP or OCMI should first consult with the appropriate District legal office for guidance. This control should not be relied upon when a PSC detention is the appropriate option.

e. Restrictions of Operations/Vessel Movement. The COTP or OCMI may impose restrictions on vessel operations or movements if vessel deficiencies pose security or safety threats. The COTP or OCMI may order a vessel to correct deficiencies even

when these do not affect the vessel's fitness to proceed to sea. In such cases, the vessel is not substandard and the COTP or OCMI should not detain the vessel. Whenever the COTP or OCMI issues a COTP Order solely to comply with U.S. regulations, the authority for the order should be the PWSA.

f. Delay. The COTP or OCMI may delay a vessel until it corrects certain deficiencies. For example, if the port is at MARSEC level 2 (generally equivalent to security level 2) and the arriving vessel is at security level 1, the ship should implement the additional security requirements of security level 2 plus the additional requirements of MARSEC level 2 before the vessel may be allowed to enter port.

g. Comprehensive Security Inspection. This is the minimum control action to take when clear grounds of a security deficiency are established. Similar to the expanded exam for a safety violation, this expanded security inspection is very detailed, possibly including a review of relevant portions of the ship security plan. Since these plans include sensitive information, the COTP or OCMI may only examine the SSP if the only means available to verify or rectify a security requirement in question is through review of relevant portions of the SSP. The COTP or OCMI must also obtain authorization from the Master and/or flag Administration (as appropriate) before reviewing portions of the plan. If the Master or flag Administration does not authorize PSCO review, and the only means to determine compliance is through SSP review, the COTP or OCMI may consider the vessel for denial of entry, expulsion from port, or an IMO detention, depending on the circumstances. The prevailing need to keep U.S. ports secure justifies the potential delays to commerce that may result from this control action.

h. Letter of Deviation. The COTP or OCMI may authorize, upon written application, a deviation from any rule in 33 CFR Part 164. However, the COTP or OCMI must consider risks imposed by equipment failures reported in accordance with 33 CFR 164.53 and casualties reported in accordance with 46 CFR 4.05, before issuing a Letter of Deviation. The COTP or OCMI should require a vessel examination prior to issuing a Letter of Deviation in those cases involving vessels at high risk from a safety perspective. Issuance of a Letter of Deviation does not preclude the possibility of pursuing civil penalty action and is not an appropriate control action for security deficiencies.

i. Lesser Administrative/Corrective Measures. The COTP or OCMI may choose to use lesser administrative or corrective measures for certain deficiencies. For example, if the Coast Guard finds a vessel with a non-detainable deficiency and the vessel corrects the deficiency to the satisfaction of the PSCO before the vessel experiences any delay, a lesser corrective measure has occurred.

(1) Requiring Corrective Measures within a Specified Period. The length of time allowed to effect the repairs is left to the discretion of the OCMI/COTP. In making this determination, the OCMI/COTP should consider the nature and severity of the deficiency; the amount of time normally needed to repair such a deficiency; the availability of repair facilities, drydocks or service facilities, and the vessel's itinerary. In most cases, a one-month compliance date will be appropriate. If compliance is required prior to the next U.S. port entry, the compliance date entered into MISLE should be the day after the vessel departs the port for sea. This will automatically classify the vessel as having an outstanding deficiency and identify the vessel for a priority II examination at the next U.S. port. Some repairs may not be feasible until the next scheduled yard period or drydocking. In such cases, PSCOs should estimate the latest date by which a vessel must be drydocked and enter that date as the compliance date.

(2) Requiring Corrective Measures Prior to Return to United States. A vessel may only have deficiencies related to U.S. laws or regulations that are not requirements under international conventions and that pose no immediate threat to the environment or adversely affect the vessel's seaworthiness. Such a vessel should not be detained under SOLAS or the various international conventions.

In such cases, corrective measures may be required prior to the vessel's return to a U.S. port. The deficiencies must be entered into MISLE with a compliance date corresponding to the date following the vessel's departure. The comments section should indicate corrective measures are to be completed prior to return to the United States.

(3) Requiring Corrective Measures Prior to Embarking Passengers. Title 46 USC 3505 prohibits a foreign vessel from departing a U.S. port with passengers who are embarked at that port if the vessel does not comply with SOLAS. In many cases, passenger vessel deficiencies may not make the vessel unseaworthy or a risk to the environment. In these cases it may be appropriate to prohibit the vessel from embarking passengers in the United States until corrective measures are accomplished if the hazard is severe enough to endanger passengers while the vessel is at the pier.

2. Administrative Enforcement Measures

a. Letter of Warning. This correspondence is appropriate for minor first-time violations that vessel operators correct immediately. The discovery of administrative errors in dangerous cargo manifests is an example of a minor violation. However, a history of continuing violations in MISLE indicates the need for more stringent enforcement actions. The COTP or OCMI may issue a Letter of Warning to all parties (owner/ operator/ agent) involved with a vessel.

b. Civil Penalty. The COTP or OCMI should initiate civil penalty proceedings for all major non-criminal violations, for repeat offenses, and any minor violations not corrected prior to returning to a U.S. port. Penalty amounts are determined by the circumstances under which the violation occurred, seriousness of the violation, culpability of the party, prior history of similar violations, and economic benefit of noncompliance to the responsible party. Civil penalties other than serious Federal Water Pollution Act (FWPCA) or Comprehensive Environmental Response Compensation and Liability Act (CERCLA) violations are adjudicated by Coast Guard hearing officers under 33 CFR 1.07. See Civil Penalty Hearing Officer Procedures, COMDTINST M16200.5A for additional information.

c. Letter of Undertaking (LOU)/Surety Bonds. Whenever a violation case is pursued, the PSCO should normally require a LOU or a Surety Bond from the vessel owner, operator, or person in charge to ensure payment of a penalty or fine.

---

3. Banning

a. Certain foreign flagged commercial vessels may be denied entry into any port or place in the United States based on their history of operating in waters subject to U.S. jurisdiction in a substandard condition.

b. For the most part, shipping companies maintain high standards of safety, security, and environmental protection by implementing the ISM Code; however, there are cases where Coast Guard PSCOs repeatedly detain foreign flagged vessels for significant safety and security substandard conditions. In these cases, the vessel's flag Administration is notified and the substandard conditions are corrected, but the underlying cause may not get identified or adequately addressed as would be expected if an effective safety management system (SMS) is in place.

c. The following procedures should be followed when a vessel has been repeatedly detained by the Coast Guard (**three** detentions within a **twelve** month period) and it is determined that failure to effectively implement an SMS maybe be a contributing factor for the substandard condition(s) that led to the detentions:

(1) Prior to conducting a PSC exam on a vessel that has a history of detentions, the vessel's MISLE history (including deficiencies, detentions, marine casualties, pollution incidents and/or marine violations) should be closely scrutinized for indications that the vessel's SMS may not be effectively implemented. This review should include previous PSC exams from other port States to determine if the substandard companies and vessels may be changing shipping routes to circumvent PSC targeting initiatives.

(2) If during the exam, detainable deficiencies are uncovered as described in paragraph D of this chapter, the vessel should be detained under the applicable convention. The PSCO should also evaluate whether the substandard condition is the result of a poorly implemented SMS. If clear grounds lead the PSCO to believe that the ship has not effectively implemented its SMS then an expanded exam of the SMS shall be completed.

(3) Units should notify Commandant (CG-CVC-2) using the notification process outlined in paragraph E of this chapter. The following text should be added to the notification e-mail: "This is the vessel's 3rd (or 4th, 5th, etc.) IMO detention within the past twelve months."

(4) Commandant (CG-CVC-2) will review all of the vessel detentions and MISLE activities to determine whether they indicate a failure of the company, vessel, or flag Administration to take proactive measures to correct the substandard conditions and improve the ineffective SMS.

(a) If the review indicates the company, flag Administration, or vessel have not taken adequate compliance measures, Commandant (CG-CVC-2) will:

[1] Issue a Letter of Denial to the vessel's owner and company (listed on the Document of Compliance) informing them that the vessel will be denied entry into any port or place in the United States unless specific actions are completed.

[2] Send a copy of the letter with the IMO report for denied entry to the Districts and Sectors involved.

[3] Notify the vessel's flag Administration and other contracting governments (MOU's Secretariat) explaining the Coast Guard's actions.

[4] Scan the appropriate documents into MISLE and enter a deficiency, special note, and lookout on the vessel.

(b) If Commandant (CG-CVC-2) determines that the detentions during the previous twelve months are not the result of an ineffective SMS, no further action will be taken and the unit and District will be notified accordingly.

d. The denial of entry will be associated with the vessel by its IMO number and will remain in effect until removed by Commandant (CG-CVC-2). If the vessel is sold, placed under new management (new Document of Compliance and Safety Management Certificate), renamed, or re-flagged, all requirements in the Letter of Denial will remain in place. The imposed conditions do not apply during voyages of innocent passage and force majeure.

e. Once the company feels they comply with the requirements specified in the Letter of Denial, they will submit all supporting evidence to Commandant (CG-CVC-2). Commandant (CG-CVC-2) will review the submitted information to determine if it appears the owner and company have taken appropriate measures to correct the ineffective SMS.

(1) If satisfactory evidence is provided, Commandant (CG-CVC-2) will issue them a Letter of Acceptance, with copies to the vessel's flag Administration and the involved Coast Guard Districts and Sectors. Commandant (CG-CVC-2) will also notify the contracting governments (MOU's Secretariat), update the special note, remove the lookout, and scan all correspondence into MISLE.

(a) Upon the vessel's return to any port or place in the United States after a Letter of Acceptance has been issued, units must conduct a Priority I PSC exam.

(b) If detainable deficiencies or major non-conformities are discovered, the vessel should be detained or denied entry in accordance with existing policies.

(2) If satisfactory evidence is not provided, Commandant (CG-CVC-2) will reply via letter outlining the reasons for rejecting the evidence and scan the correspondence into MISLE.

f. If a banned vessel submits a Notice of Arrival and there is no evidence in MISLE that a Letter of Acceptance has been issued, units should notify their District staff and take the following actions:

(1) Contact Commandant (CG-CVC-2) for an update on the vessel's status. If Commandant (CG-CVC-2) confirms that a Letter of Acceptance has not been issued, units should issue a Captain of the Port Order (COTP) Order denying entry. Commandant (CG-CVC-2) can provide an example COTP Order upon request.

(2) If the owner or company submits the required documentation in response to the COTP Order, the information should be forwarded to Commandant (CG-CVC-2) for review via the District. Commandant (CG-CVC-2) will review the evidence and determine if a Letter of Acceptance is appropriate or if the vessel will remain banned.

g. Commandant (CG-CVC-2) will review subsequent detentions that occur within twelve months of the Letter of Acceptance date. If Commandant (CG-CVC-2) again determines the company or flag Administration failed to correct substandard conditions and improve an ineffective SMS, they will issue a second Letter of Denial to the vessel's owner and company (listed on the Document of Compliance). This letter will ban the vessel from entering any port or place in the United States for a minimum of twelve months and until certain SMS requirements are met.

h. Units should notify Commandant (CG-CVC-2) if a detained vessel proceeds to sea without complying with the conditions indicated on the Port State Control Report of Inspection/Report of Deficiency, Form CG-5437 A/B. Commandant (CG-CVC-2) will review the case and determine if a Letter of Denial is appropriate and the associated requirements to earn approval for reentry.

i. Commandant (CG-CVC-2) may also use these banning procedures for a vessel which:

(1) Has less than three detentions in twelve months, but in the opinion of the Coast Guard, the condition of the vessel may pose a risk to the safety of the vessel, crew, or the marine environment; or

(2) Is subject to the provisions of chapter 37 of Title 46 U.S.C which:

(a) Has a history of accidents, pollution incidents, or serious repair problems which creates reason to believe that such a vessel may be unsafe or create a threat to the marine environment; or

(b) Has discharged oil or hazardous material in violation of any law of the United States or in a manner or quantities inconsistent with the provisions of any treaty to which the United State is a party.

j. Owners may request reconsideration of the Letter of Denial at any time. The requirements will remain in effect during any request for reconsideration. All correspondence must be submitted to:

Commandant (CG-CVC-2)
Chief, Foreign & Offshore Vessel Compliance Division
U.S. Coast Guard

2703 Martin Luther King Jr. Ave SE
Stop 7501
Washington, DC 20593-7501

D. DETAINABLE DEFICIENCIES

The COTP or OCMI should detain a vessel when deficiencies discovered during a PSC examination render a vessel unfit to proceed without presenting a danger to the ship or persons on board, or without presenting an unreasonable threat of harm to the marine environment. The following paragraphs provide examples of detainable deficiencies and the corresponding authority. This is not a comprehensive list of examples, but is intended to demonstrate the nature and degree of deficiencies that could warrant a detention. In addition to the examples described below, PSCOs should use the most current edition of the International Maritime Organization's publication Procedures for Port State Control as a guide for determining detainable deficiencies.

Note: Vessels that suffer casualty or weather damage at, or on the way to, ports in the United States should not be subjected to intervention or detention as long as the vessel's owner demonstrates intent to repair the damage while in port. In such a situation, the COTP may impose any operational controls necessary to protect life, the port, or the environment through a COTP order (i.e. to require a tug assist, daylight transit, containment boom, etc.).

1. Documentation Discrepancies

a. Documents not available.

b. Document missing the name of its issuing authority.

c. Document does not identify the vessel.

d. Document lacks an issue date, signature of the duly authorized official issuing the document, or seal or stamp of the issuing authority.

e. Disparities between actual condition of vessel and documentation listing.

---

2. International Ship and Port Facility Security (ISPS) Code

a. Lack of, or expired/invalid, International Ship Security Certificate or interim International Ship Security Certificate (Preferably, the COTP/OCMI should deny entry to the vessel if it has not arrived at the port or expel the vessel from port, if in port).

b. Lack of/incomplete approved ship security plan (Preferable action for missing security plan - the COTP/OCMI should deny entry to the vessel if it has not arrived at the port or expel the vessel from port, if in port).

c. Lack of an assigned ship security officer (Preferably, the COTP/OCMI should deny entry to the vessel if it has not arrived at the port or expel the vessel from port, if in port).

d. Ship Security Officer (SSO) cannot display an acceptable level of competency in regard to vessel security (If the SSO shows a profound lack of knowledge with respect to implementation of the ship security plan, the COTP/OCMI may deny entry to the vessel if it has not arrived at the port or expel the vessel from port, if in port). Note the PSCO should not expect the SSO to have an encyclopedic knowledge of the ship security plan.

e. Crew anomalies (e.g., gross incompetence, unaccounted personnel, fraudulent documents, etc.). If other significant security deficiencies exist, the COTP/OCMI may deny entry to the vessel if it has not arrived at the port or expel the vessel from port, if in port.

f. Inaccurate or incomplete Notice of Arrival information (Under specific circumstances, see SOLAS Reg. XI-2/9.2.2. Note the COTP/OCMI may, as an alternative, deny entry.)

g. Evidence that serious deficiencies exist in regards to the vessel's security equipment, documentation or arrangements.

h. Master or crewmembers not familiar with essential shipboard security procedures. (Requesting the RSO or the company to conduct training or the replacement of trained crew is appropriate).

i. Inability of crewmembers to establish communications with other key members with security responsibilities.

j. Missing or inoperable ship security alert system (Note applicability dates for equipment in SOLAS Reg. XI-2/6.1).

k. Lack of Declaration of Security when required or agreed upon amongst parties (The COTP/OCMI may, as an alternative, delay the vessel until the DOS is in place).

l. Evidence that cargo handling security procedures are not in place (The COTP or OCMI may, as alternatives, restrict cargo operations, delay vessel and/or expel from port, depending upon the risk to the port and its infrastructure).

m. Poor access control screening procedures on passenger vessels associated with passenger access control or unaccompanied passenger baggage (The COTP/OCMI may, as an alternative, restrict operations or delay the vessel in isolated cases by security personnel. The COTP/OCMI may expel the vessel from port in cases indicating a chronic failure of access control.).

n. Lack of access control on cargo vessels (i.e. No one at gangway to screen visitors; see SOLAS definition for cargo vessels.)

o. Lack of controls to monitor/protect restricted areas from unauthorized access.

p. Multiple deficiencies involving access control, monitoring of restricted areas, supervising cargo/ship's stores operations, performance of security duties, etc., with a net effect that the ship is substandard with respect to compliance with SOLAS Chapter XI-2 and the International Ship and Port Facility Security Code. Note the COTP/OCMI must be able to justify such action based on the objective evidence.

---

4. International Convention for the Safety of Life at Sea (SOLAS)

a. Failure of essential machinery to operate properly, especially due to lack of maintenance (The COTP/OCMI may take lesser action in cases where failure just occurred and the ship is taking responsible action to rectify the problem).

b. Excessive oil in engine room bilges, insulation of machinery exhausts contaminated by oil, improper operation of bilge pumping arrangements (The discrepancy must represent a serious fire hazard to the vessel).

c. Failure of emergency generator, lighting, batteries, etc. to operate properly.

d. Failure of steering gear to operate properly in any mode.

e. Absence, insufficient capacity, or serious deterioration of any lifesaving appliances.

f. Absence, insufficient capacity, or serious deterioration of any firefighting appliances or fire protection (including structural fire protection and serious problems related to means of escape).

g. Absence, substantial deterioration, or failure of proper operation of cargo deck area fire protection on tankers.

h. Absence, noncompliance, or serious deterioration of navigation lights, shapes, or sound signals.

i. Absence or inoperable GMDSS or associated equipment.

j. Absence or inoperable required navigation equipment, taking into account SOLAS (2004) Regulation V/16.2.

k. Absence of corrected navigational charts and/or relevant publications necessary for the intended voyage, taking into account electronic charts/publications.

l. Absence of non-sparking exhaust ventilation for cargo pump rooms.

m. Serious deficiency in operational requirements (e.g. unsatisfactory fire and abandon ship drills, no common crew working language, unfamiliarity with operation of machinery, etc.).

n. Number, composition, or certification of crew not corresponding to safe manning document.

o. Non-implementation of required enhance program of inspection.

p. Multiple deficiencies affecting vessel's safety, none of which alone warrant vessel detention, but collectively make the ship substandard with respect to compliance with SOLAS and thereby warrant vessel detention. Note the COTP/OCMI must be able to justify such action based on the objective evidence.

---

5. International Convention on Load Lines (ICLL 66)

a. Significant areas of damage or corrosion, or pitting of plating affecting fitness or strength, unless proper temporary repairs for a voyage to a port for permanent repairs has been authorized and accepted by Class.

b. A recognized case of insufficient stability.

c. Load-line violation (overloading).

d. Absence or substantial deterioration of closing devices, hatch closing arrangements, and watertight/weathertight doors.

---

6. International Convention for the Prevention of Pollution from Ships (MARPOL)

a. Absence, serious deterioration, or failure of the oily water separator, the oil discharge monitoring and control system, or the 15-ppm alarm arrangements.

b. Remaining capacity of slop and/or sludge tank insufficient for the intended voyage.

c. Unauthorized discharge bypass piping fitted.

d. The Oil Record Book is falsified or missing all records of transfers of sludge and bilge water or onboard incineration of oily waste, or records of loading, unloading, internal transfers, ballasting of cargo tanks, discharge of water from slop tanks and disposal of oil residues. Note: This does not include minor administrative discrepancies related to Oil Record Book entries.

---

7. International Convention on the Standards for Training, Certification, and Watchkeeping for Seafarers (STCW)

a. Failure of seafarers to hold a certificate, to have an appropriate certificate, to have valid dispensation, or to provide documentary proof that the seafarer has applied for an endorsement to the flag state administration.

b. Failure to comply with the applicable safe manning requirements of the flag state administration.

c. Failure of navigational or engineering watch arrangements to conform to the requirements specified by the flag state administration.

d. Absence in a watch of a person qualified to operate equipment essential to safe navigation, safety radio communications, or the prevention of marine pollution.

e. Failure to provide proof of professional proficiency for the duties assigned to seafarers for the safety of the ship and the prevention of marine pollution.

f. Inability to provide for the first watch at the commencement of a voyage and subsequent relieving watches persons who are sufficiently rested and otherwise fit for duty (this may include required crewmembers not fit for duty because of drunkenness).

---

8. International Labour Organization Convention No. 147 (ILO 147)

a. Insufficient food for voyage to next port.

b. Insufficient potable water for voyage to next port.

c. Excessively unsanitary conditions on board.

d. No cooling or heating in accommodation of a ship operating in areas where temperatures may be excessive.

e. Excessive garbage, blockage by equipment or cargo or otherwise unsafe conditions in passageways/accommodations.

---

9. International Code for the Construction and Equipment of Ships Carrying Dangerous Chemicals in Bulk (IBC) Code

a. Transportation of a substance not listed on the Certificate of Fitness.

b. Missing or inoperative high-pressure safety devices.

c. Electrical installations not intrinsically safe or corresponding to code requirements.

d. Sources of ignition in hazardous locations.

e. Insufficient heat protection for sensitive products.

---

10. International Code for the Construction and Equipment of Ships Carrying Liquefied Gases in Bulk (IGC) Code

a. Transportation of a substance not listed on the Certificate of Fitness.

b. Missing closing devices for accommodations or service spaces.

c. Bulkhead not gastight.

d. Defective air locks.

e. Missing or defective quick closing valves.

f. Missing or defective safety valves.

g. Electrical installations not intrinsically safe or not corresponding to code requirements.

h. Ventilators in cargo area not operable.

i. Pressure alarms for cargo tanks not operable.

j. Gas detection plant and/or toxic gas detection plant not operable.

k. Transport of substances to be inhibited without valid inhibitor certificate.

---

11. International Safety Management (ISM) Code

a. The Safety Management System (SMS) documents a company's management procedures to ensure that conditions, activities and tasks, both ashore and on board, affecting safety, security and environmental protection are planned, organized, executed, and checked in accordance with statutory and company requirements. The SMS contains the procedural requirements for vessels to carry out normal operations including, but not limited to, preventative maintenance, navigation procedures, bunkering operations, emergency preparedness, pollution prevention procedures, technical systems, and operations and communications procedures. With this in mind, many deficiencies can be attributed to a failure to follow some standardized procedure or an inappropriate procedure. Therefore, if a failure occurs, the vessel and/ or company must correct the deficiencies as well as review systems management to implement correct procedures.

b. If the OCMI discovers major non-conformities exist with the vessel's SMS, such as a deviation from SMS requirements that poses a serious and direct threat to personnel or ship safety, evidence that the ship is not taking corrective action for long-standing non-conformities per preventative maintenance processes in the SMS, or evidence the company has failed to address outstanding non-conformities reported by the ship, the OCMI may consider the vessel for detention. To do so the OCMI must articulate the specific deficiencies of the failed SMS.

c. The OCMI may also recommend to the flag Administration to perform an external audit of the vessel's SMS. If the OCMI suspects problems exist on the company side, the OCMI should submit a memo to Commandant (CG-CVC-2) via the District and Area, fully documenting the suspected problems and requesting that the flag Administration conduct an external audit of the company involved.

E. DETENTION REPORTING AND NOTIFICATION PROCEDURES

1. Safety and Security Related Detentions, Unit Responsibilities

Whenever a foreign vessel has an intervention leading to detention, the COTP must conduct several notifications regardless of whether the detention is due to a security related or safety related issue. The table below titled "IMO Detention Notification Responsibility Chart," summarizes unit notification responsibilities.

a. Flag State Notification. Whenever the COTP denies a foreign vessel entry into a port or offshore terminal or detains the vessel for a safety or security reason, the unit taking that action must notify the flag State as soon as possible. The Port State Control section of the Coast Guard Homeport website (http://homeport.uscg.mil) provides flag State point of contact information. IMO Assembly Resolution A.1052(27) requires that port States initiating control actions notify the flag Administration forthwith. For maritime security-related control actions (e.g. inspection of the ship, delaying the ship, detention of the ship, restriction of operations, restriction of movement of the ship within the port, or expulsion of the ship from port), the unit making the control action must also notify the flag State as soon as possible.

Notification should be in writing and never more than 24 hours of initiating the action. Submitting Port State Control Report of Inspection Form A, CG-5437A and Port State Control Report of Inspection Form B, CG-5437B is an acceptable means of notifying the flag State. COTPs must contact Commandant (CG-CVC-2) if this timeline cannot be met or if difficulties are encountered in making the required notification.

b. Coast Guard Headquarters/Area/District Notification. When deficiencies merit detention, expulsion from port, or denial of entry under international instruments such as SOLAS, units are directed to scan both the USCG Port State Control Report of Inspection Form A, CG-5437A and the USCG Port State Control Report of Inspection Form B, CG- 5437B into MISLE.

(1) Units must submit the forms to Commandant (CG-CVC-2) for detention/major control action cases (if form A, Block 17 is marked “Yes”) to Commandant (CG-CVC-2) at cgcvc@uscg.mil. If units cannot scan the forms, they should contact Commandant (CG-CVC-2) for alternate submission approval.

The unit should deliver the report to CG-CVC-2 and appropriate commands in the chain of command as soon as possible, but no later than 1630 EST/EDT on the next day following the detention or major control action.

(2) The unit should completely and accurately fill out both forms. Commandant (CG-CVC-2) will return any incomplete forms to the unit for re-submission, in the same manner submitted.

(3) PSCOs must clearly annotate those deficiencies identified and approved by the cognizant Officer in Charge of Marine Inspection (OCMI) or COTP as detainable under SOLAS, and must clearly mark the deficiency as a Code 30 on USCG Port State Control Report of Inspection Form B, CG- 5437B, under the “Action Taken” category. The PSCO can locate each code on the bottom of the Form B.

The deficiency must clearly state the grounds for detention. Since these are international forms, IMO convention cites should have first priority on Form B. ILO cites and CFR cites are not party to the IMO conventions and if listed should be used only if necessary and sparingly. If a vessel violates applicable domestic regulations, then the unit should issue these deficiencies to the vessel through a COTP Order and/or via civil penalty action or a letter of warning. The PSCO may also document ILO cites in a COTP Order. The deficiency must clearly state the grounds for detention and include a cite reference to the international convention or standard (not the Code of Federal Regulations) that applies to each deficiency. All deficiency descriptions should be as specific and descriptive as possible using quantifiable language. A general description of the standard the ship does not meet and how the ship fails to meet the standard is sufficient. For example, instead of describing an oil "leak" on a main diesel engine, describe how the leak endangers the ship and its crew leading to the detention action.

(4) To ensure quality control for all detention or major control action reports, the Chief, Inspections Division; Marine Safety Detachment (MSD) Supervisor; or Chief, Prevention Department must sign Form B. The supervisor should return the Form A and Form B to the PSCO for correction and reissue to the vessel if the form is incomplete or if the deficiency descriptions do not clearly state the standard the ship does not meet and how the ship fails to meet the standard. The supervisor must sign and print his/her name on the lower right side of Form B. If the detention or major control action occurs after hours, the Command Duty Officer may also sign the Form B if it is not possible for the supervisor to sign the Form B, as long as the supervisor approves the content.

(5) Upon receipt of the Form A and Form B associated with a detention, denial of vessel entry, or expulsion related to a substandard vessel, Commandant (CG-CVC-2) will review the report for completeness and consistency with reporting and enforcement policy. This review is separate from that performed by Commandant as part of any appeal process. Commandant (CG-CVC-2) may request clarification or return reports that are incomplete or inconsistent with policy. Further, Commandant (CG-CVC-2) may overturn any detention, denial of entry, or expulsion action whenever the deficiencies reported on the Form B do not support a finding of a substandard vessel as defined in current policy and in IMO-published Procedures for Port State Control. Commandant (CG-CVC-2) will provide information copies of correspondence relating to returned reports to the cognizant Area and District staff.

(6) IMO's Procedures for Port State Control, 2011, requires flag Administration and recognized organization (where appropriate) notification in writing when a vessel is released from detention. To facilitate this notification, Block 13B was added to the Form A. This block should be completed when a vessel has corrected all

detainable deficiencies and is released from detention. The amended form should be sent via e-mail to the same recipients as the initial detention notification. This notification should occur as soon as possible, but never more than 24 hours after the vessel is released.

c. Classification Society/Recognized Organization/Recognized Security Organization Notification. The unit must notify the local office of the classification societies, Recognized Organization (RO), or Recognized Security Organization (RSO) that issued the relevant certificates of the related detention. A visit by the local surveyor or class representative can expedite the deficiency correction process. The delivery of the completed report to the Classification Society, RO, or RSO should be as soon as possible, but no later than 1630 local time on the next business day following the detention. The Port State Control section of the Coast Guard Homeport website (http://homeport.uscg.mil) provides a list of points of contact for class societies. Submittal of Forms A and B is an acceptable form of notification.

(1) PSCOs should involve the RO and the RSO in the correction of deficiencies related to equipment, hull, structure, or security items. To ensure accountability, the OCMI/COTP should advise Commandant (CG-CVC-2) of unsatisfactory performance of these organizations rather than corresponding directly.

(2) Upon review, Commandant (CG-CVC-2) will determine whether actions taken by the organization contributed to the detention/major control action. In such cases, Commandant (CG-CVC-2) will officially notify the organization. Commandant (CG-CVC-2) analyzes the annual performance for each organization to develop and publish the targeted lists for the targeting matrices.

d. Ship Management Notification. The COTP should ensure that the owner, operator, master, and/or charterer of the vessel receives a copy of the Form A and Form B and understands the actions necessary to correct all deficiencies.

e. Detentions Overturned on Appeal. If an IMO reportable detention appeal is granted at the OCMI or District level, the unit granting the appeal must send a notification e-mail to Commandant (CG-CVC-2) at cgcvc@uscg.mil with the vessel name, the date of the initial appeal, and the MISLE activity number. Commandant (CG-CVC-2) will then notify the IMO and delete the detention from all databases to ensure the vessel, ship management, and flag Administration are not improperly targeted for more frequent examinations.

---

2. Safety and Security Related Detentions, Coast Guard Headquarters Responsibilities

Upon receiving notification of a safety and/or security related detention, Commandant (CG-CVC-2) is responsible for the following:

a. Owner Notification. Upon receipt of the Forms A and B, Commandant (CG-CVC-2) will send written notification to the owner, operator, managing operator, and charterer of the vessel, within 45-60 days of the detention.

b. International Maritime Organization (IMO) Notification. When an intervention leads to a detention, Commandant (CG-CVC-2) will submit a report to IMO to fulfill the reporting procedures as required by various international instruments, normally conducted within 45-60 days of the detention.

---

3. IMO Detention Notification Responsibility Chart

	Unit Notification Responsibility for Non-Major* Security-Related Control Actions	**Unit Notification Responsibility for Major ** Security-Related Control Actions**	**Unit Notification Responsibility for Safety-Related Detention**	**HQ Notification Responsibility for Safety-Related Detention or Security-Related Major Control Action**	**Unit Notification Responsibility for Ship Denied Entry for Safety or Security**	**HQ Notification Responsibility for Ship Denied Entry for Safety or Security**
Complete Form A and B and scan documents. Attach scanned versions to activity in MISLE	**XX**	**XX**	**XX**		**XX**	
Notify Master and give copy of Forms A and B	**XX**	**XX**	**XX**		**XX**	
Email or Fax Forms A and B to Ship Management	**XX**	**XX**	**XX**		**XX**	
Email or Fax Forms A and B to Recognized Security Organization or Classification Society	**XX**	**XX**	**XX**		**XX**	
Email or Fax Forms A and B to Flag State	**XX**	**XX**	**XX**		**XX**	
If required by Area/District,		**XX**	**XX**		**XX**	

Email or Fax info copies of Forms A and B by close of business next working day						
Ship Management Notification Letter				**XX**		**XX**
IMO Notification Letter				**XX**		**XX**
Notify Port State Control Memorandums of Understanding/ Agreements						**XX**

*** Non-Major Control Actions include all security-related inspections of the ship, delays of the ship, restrictions of operations, & restrictions of movement.**
**** Major Control Actions include all ISPS security-related detentions, expulsions from port, and denials of entry.**

F. MARINE INFORMATION FOR SAFETY AND LAW ENFORCEMENT (MISLE)

Marine Information for Safety and Law Enforcement (MISLE) is used by all field units, Districts, Areas and Headquarters offices as the primary data capture and information management tool for planning, scheduling, executing, monitoring and tracking all activities associated with foreign vessels. It also serves as the primary system for passing information to the Coast Guard Command Center for daily senior-level briefings, which are expected to portray an accurate nationwide snapshot of all key prevention activities. It is imperative that all MISLE data entries are entered in a timely, accurate, and consistent manner. All MISLE data entry shall be completed as outlined in the *MISLE Data Entry Requirements for Foreign Vessel Arrivals, Examinations and Operational Controls* Work Instruction located in the Commandant (CG-CVC-2) Foreign Vessel Inspection collaboration section of CG Portal.

CHAPTER 3: PROCEDURES TO ENSURE ACCOUNTABILITY FOR PORT STATE CONTROL EXAMINATIONS AND DETENTIONS

A. BACKGROUND

During the early implementation of the U.S. Port State Control (PSC) program, detention reports were reviewed only to fulfill international obligations. This amounted to tracking and consolidating information submitted in field units' detention reports and providing that information to the International Maritime Organization (IMO). This information included the type of vessel, its flag of registry, the nature of the deficiencies that gave rise to the detention, and the specific international treaty under which the detention was carried out. This review process did not include a systematic check of a vessel's prior arrivals in U.S. ports to determine if the vessel's condition should have been discovered earlier and did not establish a standard process to provide feedback to Coast Guard field units or District Commanders. Recognizing accountability as an important element in the PSC Program, this chapter outlines the review process to address these gaps.

B. REVIEW PROCESS

To maintain program oversight, Commandant (CG-CVC-2) will review all detention reports to monitor the effectiveness and quality of PSC activities. This review ensures that PSC exams are conducted in accordance with this manual and other existing policy and guidance, verifies the applicability of deficiencies cited, and, when necessary, investigates why major deficiencies went undetected during previous exams.

1. Reporting Requirements

The PSC detention review process is triggered when Commandant (CG-CVC-2) receives notification that a foreign vessel has been detained in U. S. waters. MSM Volume II, Material Inspection, COMDTINST M16000.7 (series), Section D, Chapter 2 contains specific detention reporting requirements.

2. Initial Review

Upon receiving a report of detention, Commandant (CG-CVC-2) will conduct an initial review to determine if the circumstances warranted a detention or whether other control methods as outlined in MSM Volume II, Material Inspection, COMDTINST M16000.7 (series), Section D, Chapter 2 would have been more appropriate. In some cases, Commandant (CG-CVC-2) will contact the unit issuing the detention to obtain additional information or clarify certain deficiencies.

a. Substandard determination. If Commandant (CG-CVC-2) determines that the vessel was substantially below standards required by the relevant conventions, or the crew was not in conformance with the safe manning document, the vessel will be considered substandard. Detained vessels determined to be substandard will be reported to the IMO, flag state, owner/operator, and posted in the PSC section of the Coast Guard's Homeport website. This CG-CVC-2 notification is separate from the initial flag state notification from the unit. If Commandant (CG-CVC-2) determines the vessel does not meet detention criteria, Commandant (CG-CVC-2) will overturn the control action and send an e-mail to the unit and the appropriate District office explaining why the detention report was not forwarded to the International Maritime Organization for reporting purposes.

b. Compliance history. In all valid detention cases, Commandant (CG-CVC-2) will query MISLE and review the vessel's boarding history for the 12 months preceding the detention. The scope of the review includes information about the vessel such as its type, age, length, tonnage, owner, operator, classification society, and flag of registry. The review will also include the date and location of U.S. port calls, the scope of previous exams, the record of civil penalties, marine casualties, pollution incidents, PSC control measures applied, the status of the vessel's certificates, and a record of outstanding and resolved discrepancies.

c. Foreign vessel targeting matrix. The PSC program is designed to identify which vessels entering U.S. waters are most likely to be substandard. In this process, various risk factors are considered to determine a vessel's boarding priority in accordance with the procedures set forth in MSM Volume II, Material Inspection, COMDTINST M16000.7 (series), Section D, Chapter 4. During the initial review, Commandant (CG-CVC) will consider the priority determination to evaluate whether potentially dangerous vessels were overlooked and not examined in conformance with these targeting procedures.

---

3. Root Cause Analysis

If the initial review indicates that a Coast Guard unit did not examine a high priority vessel, or if a unit did not detect apparent deficiencies that should have been detected during previous exams, Commandant (CG-CVC-2) will initiate a root cause analysis of the potential non-conformity as required by the Mission Management System. The District office should carry out the root cause analysis, take appropriate action, and forward the findings to CG-CVC-2. The Traveling Marine Inspection Staff (Commandant (CG-5P-TI)) should be consulted by either the District or CG-CVC-2 when potential programmatic issues are identified or when technical expertise will assist in the determination of the root cause. The purpose of this analysis is to determine the "why" of the potential non-conformity.

---

4. Corrective Action

District Commanders and COTPs/OCMIs, as appropriate, will implement corrective action to prevent recurrence of missed exam opportunities, substandard conditions not detected during PSC exams, or other reasons for failure to meet PSC Program objectives.

a. Legitimate Factors. Failure to meet PSC Program objectives may be attributed to legitimate factors.

(1) Examples. Failure to examine a priority vessel may be explained by unit work load, personnel unavailability due to contingency operations, adverse weather conditions, or other circumstances beyond the unit's control. Legitimate factors for not detecting a "clear grounds" deficiency may include, but are not limited to, obstruction of a structural defect by the vessel's cargo, limited amount of time to conduct the exam due to factors beyond the control of the examination team, subsequent removal by the vessel's owner/operators of equipment placed on board the vessel temporarily to pass the examination, or inability to access spaces on the vessel without undue risk to the examination team.

(2) Action. When legitimate factors are the underlying cause for failure to meet PSC objectives, the District office may conclude that no process improvements are necessary. The District office must report this conclusion to Commandant (CG-CVC-2) and the involved field unit(s).

b. Process Flaws. Failure to meet PSC Program objectives may also be attributed to process flaws.

(1) Examples. For example, training programs may have been insufficient to provide personnel with required knowledge, procedures for targeting vessels or examining specific equipment may have been unclear, or equipment may have been inadequate to successfully complete certain examination tasks.

(2) Action. When the underlying cause is a process flaw, the District office must specify process improvements to prevent the recurrence of the conditions that impaired the unit's ability to achieve PSC Program objectives. Improvements may include, but are not limited to, improving training programs, adjusting the examination team complement, clarifying or updating exam procedures, or providing additional equipment.

5. Feedback Procedures

A feedback loop is established to promote continuous improvement and provide field commands with revised guidance. The District office must report the results of all investigations to Commandant (CG-CVC-2). Commandant (CG-CVC-2) will implement changes to policy, examination procedures, training or any other factors identified by the detention review process and/or investigation. On their own initiative, District Commanders may implement corrective action plans and process improvements within their areas of responsibility. Commandant (CG-CVC-2) will measure the success of process improvements through continued reviews of detention reports.

---

6. Recognized Organization (RO) Association

a. Review and notification. Commandant (CG-CVC-2) also reviews detention cases to determine whether actions taken by the RO contributed to the detention and/or major control action. If an organization has performed unsatisfactorily, Commandant (CG-CVC-2) will make the official notification. To ensure accountability, field units should provide as much information as possible in the detention report and MISLE narratives to help Commandant (CG-CVC) make this determination. Field units should not correspond directly to ROs regarding unsatisfactory performance.

b. Factors for consideration. The following factors should be considered when submitting a recommendation as to whether the RO should be associated with a detention. Recommendations may be included in the notification e-mail sent to Commandant (CG-CVC-2) as required by MSM Volume II, Material Inspection, COMDTINST M16000.7 (series), Section D, Chapter 2.

(1) Voyage damage will not be associated with an RO unless other organization-related deficiencies are noted during the course of the damage survey.

(2) Only equipment covered by a survey conducted by the RO, or in which the RO has issued the certificate on behalf of the flag state should be considered to determine RO association.

(3) When multiple deficiencies are noted, only those deficiencies serious enough to justify detention should be evaluated to determine RO association.

(4) Outdated equipment, when the cause of a detention, will not be associated with the RO unless the equipment was outdated at the time of the last survey conducted by the RO on behalf of the flag state.

(5) The absence of easily stolen equipment such as fire hose nozzles and fire extinguishers will generally not be associated with an RO unless a large amount is missing and it is within 90 days of the last survey by the RO on behalf of the flag State.

(6) Expired certificates will not be associated with an RO unless the certificates were not endorsed or were improperly issued by the RO when they conducted the last survey on behalf of the flag State.

(7) Detentions based on crewing issues, whether conducted in accordance with SOLAS or STCW, will not be associated with an RO

(8) A time limit of 90 days will generally be placed on detentions resulting from equipment failures (i.e., non-operational fire-pumps, emergency generators, etc.) unless it is apparent that the deficiency was long standing.

(9) Serious wastage or other structural deficiencies not caused by voyage damage will be listed as RO nonconformities.

---

7. Appeals

In accordance with 46 CFR 1.03, decisions of the OCMI/COTP are subject to appeal. This is a necessary and valid step in the detention process. This provision allows the involved party to provide information that may have been overlooked or omitted during the PSC exam and the initial detention review process. Beyond the obvious financial implications, interested vessel parties have a stake in the appeal process since their association with IMO reportable control actions can result in their vessels being targeted for additional compliance examinations.

a. Appeal process to remove RO association with IMO reportable detentions/control actions. RO appeals of their association with IMO reportable detentions/control actions shall be submitted directly to Commandant (CG-CVC-2) for action. If approached, units should recommend that ROs submit their appeal electronically to portstatecontrol@uscg.mil.

b. Appeal process for all other IMO reportable detentions/control actions. All other appeals received from a company or flag State concerning the validity of a detention shall be begin with the cognizant COTP/OCMI and processed in accordance with 46 CFR 1.03.

If an IMO reportable detention appeal is granted at the OCMI or District level, the unit over granting the appeal must send a notification e-mail to Commandant (CG-CVC-2) at cgcvc@uscg.mil with the vessel name, the date of the initial appeal, and the MISLE activity number. Commandant (CG-CVC-2) will then notify the IMO and delete the detention from all databases to ensure the vessel, ship management, and flag Administration are not improperly targeted for more frequent examinations.

CHAPTER 4: TARGETING OF FOREIGN VESSELS

A. BACKGROUND

The United States enforces an expanded and comprehensive Port State Control (PSC) program in order to identify and eliminate substandard foreign merchant shipping that does not comply with international conventions and domestic rules. Title 33 CFR Part 160, Subpart C, requires that certain arriving vessels provide Notice of Arrival (NOA) to the National Vessel Movement Center (NVMC) prior to entering the United States. The Coast Guard screens these vessels prior to arrival at the first U.S. port of call using three risk-based tools. These tools use a process known as Risk-Based Decision Making (RBDM) to determine the threat a vessel poses to a U.S. port. These RBDM tools, collectively referred to as the Compliance Verification Examination Matrices, will prioritize vessel compliance examinations and security boardings.

The High Interest Vessel (HIV) Matrix is a classified, risk-based tool used to evaluate the security risk of a vessel entering into port. This manual does not provide details on the HIV screening process. For more information on the HIV Matrix and the HIV screening process refer to the High Interest Vessel Targeting Policy, COMDTINST 16614 (series). The second screening tool, the ISPS/Maritime Transportation Safety Act (MTSA) Security Compliance Targeting Matrix, evaluates risk factors applicable to a foreign-flag vessel's compliance with international and domestic security standards. Because this matrix evaluates foreign vessel compliance with security standards, this screening is not classified. The third risk-based screening evaluates risk factors applicable to a vessel's compliance with international safety and environmental standards. This analysis, called the PSC Safety and Environmental Protection Compliance Targeting Matrix**,** is also not classified.

Use of both the ISPS/MTSA Security Compliance Targeting Matrix and the PSC Safety and Environmental Protection Compliance Targeting Matrix allows for the Captain of the Port (COTP) or Officer in Charge, Marine Inspection (OCMI) to identify those vessels that pose the greatest risk of being substandard. When applied consistently, the targeting regime will identify the appropriate risk level and corresponding examination frequency for each vessel and ensure that the Coast Guard examines vessels that pose a higher risk for noncompliance more frequently than vessels that pose a lower risk. The PSC program consistency builds upon experienced and qualified PSC Officers (PSCOs) who are vital to ensuring sound judgment and professionalism of all enforcement actions.

In addition to the compliance verifications matrices discussed above, personnel should be familiar with Annex I of the Maritime Operational Threat Response (MOTR) Plan and the Condition of Entry program. The MOTR Plan is a Presidentially approved plan to achieve a coordinated government response to threats against the United States and its interests in the maritime domain. The MOTR Plan contains operational coordination requirements to ensure quick and decisive action to counter maritime threats. Annex I of the MOTR plan addresses National Security Vessels of Interest (VOIs) and NON-ENTRANT vessels. The latest policy and guidance regarding Annex I of the MOTR Plan can be found on the Foreign Vessel Security page of the CG portal website.

The Condition of Entry (COE) Program is administered by the Coast Guard's Office of International & Domestic Port Security (Commandant (CG-PSA)). The International Port Security Program assesses effectiveness of anti-terrorism measures in foreign ports. If effective anti-terrorism measures are not in place, there is an increased risk of terrorist transfer and/or weapons of mass destruction being introduced into the United States. To reduce that risk, COEs are imposed on vessels bound for the U.S. from ports with inadequate anti-terrorism measures. Commandant (CG-PSA) publically releases Port Security Advisories indicating which countries/ports are not maintaining effective anti-terrorism measures and what actions vessels should take when conducting operations in non-compliant ports. For more information, refer to the Foreign Vessel Security page of the CG portal website.

B. ACTION – USING THE MATRICES

The Marine Information for Safety and Law Enforcement (MISLE) database automatically screens all foreign-flag vessels that submit an NOA using the ISPS/MTSA Security Compliance Targeting Matrix and the PSC Safety and Environmental Protection Compliance Targeting Matrix. COTPs/OCMIs shall follow the targeting review process as outlined in the *MISLE Data Entry Requirements for Foreign Vessel Arrivals, Examinations and Operational Controls* Work Instruction located on the Commandant (CG-CVC-2) page of the CG Portal website. Units may view the assigned scores and manually change the final multiple based on local COTP/OCMI input (Intel, security/safety concerns, etc.).

In addition, the COTP or OCMI shall screen all vessels for the security risk they pose to U.S. ports. Vessels selected in this process are designated as High Interest Vessels (HIVs). While all vessels may be subject to random security boardings, these vessels are of higher interest to law enforcement authorities. As previously mentioned, this doctrine does not provide details on the screening process, since a separate, classified instruction outlines the relevant procedures. Figure D4-1 provides a pictorial view of the three screening processes related to vessel compliance examinations and security boardings for arriving vessels.

1. Targeting Philosophy – ISPS/MTSA Security Compliance

a. Applicable factors. The ISPS/MTSA Security Compliance Targeting Matrix is a screening tool that promotes systematic evaluation of several risk factors related to a vessel's compliance or noncompliance with domestic and international maritime security standards. The risk factors are ship management; flag State; Recognized Security organization (RSO); the individual vessel's security compliance history (the degree that vessel met both domestic and international maritime security standards during previous visits and exams); and Last Port of Call (LPOC) information.

b. Functionality. The ISPS/MTSA Security Compliance Targeting Matrix risk factors are integrated into MISLE as an automated MISLE-embedded targeting tool. The MISLE data fields regarding these risk factors are maintained and updated by Commandant (CG-CVC-2).

(1) MISLE scores a vessel and assigns the examination priority (ISPS I, II or III) based on existing MISLE data and NOA information. The total points and the vessel's priority status does not signify that the vessel is substandard, but does indicate that certain risk factors exist and that the Coast Guard should examine the vessel for compliance with domestic and international standards. Total points/priority status also determines where an examination should take place.

(2) PSCOs should familiarize themselves with the targeting matrix and risk factors and possess a working knowledge for manually evaluating a vessel using the matrix.

c. Consistency. To be effective, it is important that the COTP or OCMI applies this targeting regime consistently. In addition to focusing Coast Guard resources, the ISPS/MTSA Security Compliance Targeting Matrix serves to place the responsibility for maintaining vessels to accepted security standards on those entities most responsible, including ship management, RSOs, and Flag States. Linking examination decisions to the performance records of the ship, the ship's management, the RSO, the Flag State, and LPOC information helps ensure accountability.

d. Random vessel targeting. The COTP or OCMI may randomly examine vessels that do not screen for an ISPS/MTSA security compliance examination. Normally, the COTP or OCMI can perform random examinations when the vessel is in port, but may perform this examination prior to port entry if another examination is scheduled for the vessel prior to port entry.

---

2. Targeting Philosophy - Safety and Environmental Protection Compliance

a. Applicable factors. The Safety and Environmental Compliance Targeting Matrix is a screening tool that promotes systematic evaluation of several risk factors related to a vessel's compliance or noncompliance with domestic and international maritime safety and environmental protection standards. This risk-based approach evaluates vessels using five factors: ship management, flag State, recognized organization (RO), compliance history, and vessel type. The risks associated with each of these factors are evaluated using Coast Guard examination data developed over previous years.

b. Functionality. The PSC Safety and Environmental Protection Compliance Targeting Matrix risk factors are integrated into MISLE as an automated MISLE-embedded targeting tool. The MISLE data fields regarding these risk factors are maintained and updated by COMDT (CG-CVC-2).

(1) MISLE scores a vessel and assigns the examination priority (PI, PII or NPV) based on existing MISLE data and NOA information. The total points and the vessel's priority status does not signify that the vessel is substandard, but does indicate that certain risk factors exist and that the Coast Guard should examine the vessel for compliance with domestic and international standards. Total points/priority status also determines where an examination should take place.

(2) PSCOs should familiarize themselves with the targeting matrix and its processes, below, and possess the working knowledge for completing and manually processing a vessel for determination of whether or not an examination should take place.

c. Consistency. To be effective, it is important that the COTP or OCMI applies this targeting regime consistently. In addition to focusing Coast Guard resources, the PSC Safety and Environmental Protection Compliance Targeting Matrix serves to place the responsibility for maintaining vessels to accepted standards on those entities most responsible, including ship management, classification societies, and flag States. Linking targeting decisions to the performance records of the ship, the ship's management, classification society, and flag State helps ensure accountability.

d. Random vessel targeting. The COTP or OCMI may randomly examine vessels that do not screen for a PSC Safety/Environmental compliance examination. Normally, the COTP or OCMI can perform random examinations when the vessel is in port, but may perform this examination prior to port entry if another examination is scheduled for the vessel prior to port entry..

e. EQUASIS Information. The EQUASIS data system (http://www.equasis.org) is an online database created by the European Commission and French Maritime Administration to collect and disseminate quality and safety-related information on the world's merchant vessel fleet. Currently, this system displays PSC inspections and detentions that occurred within the Paris MOU, the Tokyo MOU, and the United States.

(1) The website contains a wealth of statutory information from International Association of Class Societies (IACS) Member and Associate Member Classification Societies, P&I information and a wide variety of other data.

(2) Although the EQUASIS system is not listed as a criterion on either the safety of security matrices, the use of the system by PSCOs is highly encouraged. By performing this review, PSCOs will undoubtedly gain a better overall sense of the previous condition of the vessel.

(3) To assist with this review, the MISLE system allows direct access to EQUASIS, bypassing the website log-in and search screens. The PSCO can access this hyperlink function by searching for the vessel in MISLE and then clicking the button at the bottom of the Activities tab on the Vessel Description Summary Page.

Figure D4-1: Targeting Decision-Making Process for Each Vessel Arrival

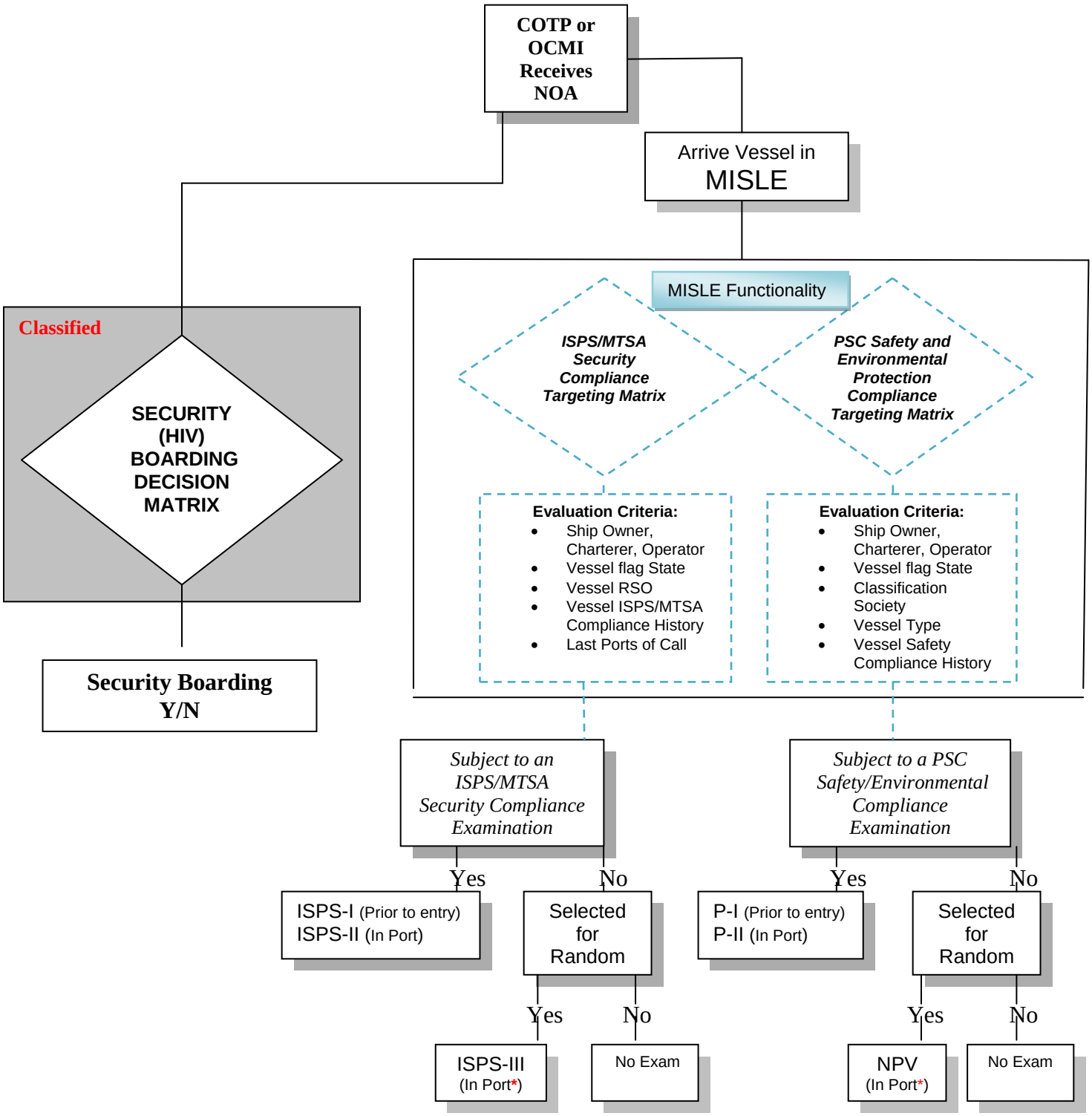

* Normally, the COTP or OCMI can perform random examinations when the vessel is in port, but may perform this examination prior to port entry if they scheduled another examination for the vessel prior to port entry.

C. TARGETING FACTOR CRITERIA

To implement the targeted compliance examination regime, it is necessary to identify which vessels, ownership managers, flag Administrations, Recognized Organizations and Recognized Security Organizations are most often associated with substandard ships. These determinations are made by Commandant (CG-CVC-2) based on Coast Guard examination and intervention data and promulgated into MISLE on a monthly basis. In addition, a copy is available for units to view on the Port State Control tab of the Coast Guard's Homeport website.

1. ISPS/MTSA Security Compliance Targeting Criteria

a. Targeted ship management. Targeted ship management includes any owner, operator, charterer or managing operator who is associated with a vessel that has been denied port entry, been expelled from port, or detained within a specified range of time and has been assigned a Control Action Ratio (CAR) based on MISLE control action information.

(1) Targeted ship management list. Commandant (CG-CVC-2) will develop and maintain a monthly listing of targeted ownership managers. This information is uploaded into MISLE for use in the automated targeting matrix. Additionally, a copy is available for units to view on the Port State Control tab of the Coast Guard's Homeport website.

(2) Application. All vessels associated with an owner, operator, charterer or managing operator associated with an ISPS-related denial of entry or expulsion, or two ISPS-related detentions within the past twelve months will receive points towards the security examination decision. Note, under the Coast Guard's Large Fleet Designation Program, if a vessel owner, operator or charterer has at least 25 vessels that visit United States ports each year and they request Large Fleet Designation, Commandant (CG-CVC-2) will not target the company unless it accumulates three or more operational controls within a 12-month period. With certain exceptions as noted in the ISPS/MTSA Security Compliance Targeting Matrix, the COTP/OCMI should target vessels linked to an owner, operator, charterer or managing operator associated with an ISPS/MTSA-related denial of entry or expulsion from port for an at-sea security compliance examination.

Regarding the single denial of entry/expulsion criterion, Commandant (CG-CVC-2) must find a direct link between ship management and the reason for the denial of entry or expulsion, otherwise Commandant (CG-CVC-2) counts the control action as equivalent to a vessel detention.

(3) Downgrading and removal. Commandant (CG-CVC-2) will monitor ship manager performance on a monthly basis. As performance improves for each targeted ship manager during the previous 12-month window, Commandant (CG-CVC-2) may remove a previously targeted ship manager from the targeted list.

b. Targeted flag Administration. The Control Action Ratio (CAR) and total number of major control actions determine whether Commandant (CG-CVC-2) includes a flag State on the Targeted Flag State List. Commandant (CG-CVC-2) determines flag State CAR values based upon the formula shown below.

(1) Flag Administration CAR. The number of major ISPS-related control actions includes all security-related denials of entry or expulsions from port and ISPS-related detentions to vessels flying the Flag of that State within the period of interest and the number of distinct vessel arrivals include all distinct vessel arrivals from that Flag State.

$$\text{CAR} = \frac{\text{\# of major ISPS/MTSA Flag State-related control actions}}{\text{\# of distinct vessel arrivals}} \times 100 \text{ percent}$$

(2) Application. All vessels associated with an Administration having a CAR of more than 1.5 but up to 3.0 percent will receive two points towards the security compliance examination decision. All vessels associated with an Administration having a CAR of more than 3.0 percent will receive seven points towards the security compliance examination decision.

Commandant (CG-CVC-2) does not target a flag State that has only one major control action in the period of interest on the Targeted Flag State List. The COTP or OCMI does not need to review histories of flag States in MISLE. Commandant (CG-CVC-2) maintains and updates the Targeted Flag State List in MISLE annually.

(3) Removal. Each year, Commandant (CG-CVC-2) will adjust targeting information applicable to a targeted flag Administration based on performance of vessels registered in that country. Commandant (CG-CVC-2) will remove the targeted flag Administration from the list if the CAR associated with that entity drops to 1.5 percent or below or if a flag Administration has been associated with only one control action in the previous 12 months.

(4) Release of information. Commandant (CG-CVC-2) will publish the targeted flag Administration list for security compliance performance in the PSC Annual Report as well as on the Port State Control tab of the Coast Guard's Homeport website.

c. Targeted RSOs.

(1) RSO. An RSO is the organization with the appropriate expertise in security and anti-terrorism matters recognized by the Administration (or Designated Authority) and authorized to carry out assessment, verification, approval and/or certification activities, required by the ISPS Code.

(2) Targeted RSO. Commandant (CG-CVC-2) reviews every case involving an ISPS-related major control action (denial of entry, expulsion from port, or detention) and determine whether RSO action or inaction contributed to the major control action. If so, Commandant (CG-CVC-2) will associate the major control action with the RSO for targeting purposes.

(3) Application. All vessels represented by an RSO associated with three or more major control actions in the past 12 months are designated ISPS I. All vessels represented by an RSO associated with two major control actions in the past 12 months will receive five points towards the security compliance examination decision. All vessels represented by an RSO associated with one major control action in the past 12 months will receive two points towards the security compliance examination decision.

(4) Removal. On a monthly basis, Commandant (CG-CVC-2) monitors RSO performance. As performance improves, Commandant (CG-CVC-2) will adjust targeting information applicable to a targeted RSO (specify fewer points or remove the RSO from the list).

(5) Release of Information. Commandant (CG-CVC-2) will publish the targeted RSO list for security compliance performance in the PSC Annual Report as well as on the Port State Control tab of the Coast Guard's Homeport website.

d. Vessel ISPS/MTSA Compliance History. As part of the case review process, Commandant (CG-CVC-2) will update each vessel's compliance history in MISLE to reflect major control actions. Commandant (CG-CVC-2)will continue to enter an inspection note after reviewing detention reports received from field units.

e. Last Ports of Call. The International Port Security Program identifies ports that do not maintain effective anti-terrorism measures or have other security concerns such as high stowaway risks. They provide a listing of these ports in the *Federal Register* and to Commandant (CG-CVC-2) on a monthly basis, and more frequently as necessary.

2. Safety and Environmental Protection Compliance Targeting Criteria

a. Targeted ship management. Targeted ship management includes any owner, operator, charterer, or managing operator whose vessels have been detained in the United States more than once within the previous 12 months under the provisions of an international Convention. Under the Coast Guard's Large Fleet Designation Program, if a vessel owner, operator or charterer has at least 25 vessels that visit United States ports each year, and they request Large Fleet Designation, Commandant (CG-CVC-2) will not target the company unless it accumulates three or more detentions within a 12-month period.

(1) Targeted ship management list. Commandant (CG-CVC-2) develops and maintains a current listing of targeted ship managers based on detention reports received from field units. Commandant (CG-CVC-2) updates the list monthly.

(2) Application. All vessels associated with a targeted owner, operator, charterer, or managing operator will be assigned points in the PSC Safety and Environmental Protection Compliance Targeting Matrix.

(3) Removal. Commandant (CG-CVC-2) removes a targeted owner from the list if they become associated with less than two detentions carried out under the authority of an international convention within the previous 12 months.

b. Targeted flag Administration. A targeted flag Administration is a country with a safety-related detention ratio exceeding the average safety detention ratio for all flag Administrations with vessels operating in U.S. waters.

(1) Flag Administration safety detention ratio. Commandant (CG-CVC-2) calculates a flag Administration's safety detention ratio by dividing the number of its vessels detained under the authority of an international convention by the number of vessels under its registry which entered U.S. waters. Commandant (CG-CVC-2) calculates the average safety detention ratio for all flag Administrations with vessels operating in U.S. waters by dividing the number of vessels detained under the authority of an international convention by the number of vessels that entered U.S. waters. Commandant (CG-CVC-2) calculates individual flag Administration detention ratios based on the previous 3 years' data to reduce the effects of single year anomalies.

(2) Targeted Flag Administration list. This list consists of the targeted flag Administrations compiled by Commandant (CG-CVC-2) on an annual basis for use with the PSC Safety and Environmental Protection Compliance Targeting Matrix. The list can be found on the Port State Control tab of the Coast Guard's Homeport website.

(3) Application. Vessels from a targeted flag Administration will receive points based on the flag Administration's detention ratio via Column II of the PSC Safety and Environmental Protection Compliance Targeting Matrix.

(4) Removal. Commandant (CG-CVC-2) removes a targeted flag Administration from the list when its safety detention ratio drops below the average safety detention ratio for all flag Administrations with vessels operating in U.S. waters or when it is associated with less than two detentions carried out under the authority of an international Convention within the past 36 months.

c. Targeted Recognized Organization (RO). Commandant (CG-CVC-2) evaluates ROs based on their performance over the previous three years. If they have a three-year safety detention ratio that exceeds the fixed three-year safety detention ratio (0.5 percent), then they will receive points.

(1) Classification society/RO. A classification society is an organization, other than a flag State that issues Certificates of Class or International Convention Certificates. When a classification society works on behalf of a flag Administration it meets the definition of a RO.

(2) Targeted RO list. The targeted classification society list contains the names of classification societies that will receive points in the PSC Safety and Environmental Protection Compliance Targeting Matrix. This list is accessible on the Port State Control tab of the Coast Guard's Homeport website.

(3) RO detention ratios. Commandant (CG-CVC-2) calculates RO performance based on their RO related safety detention ratio (number of class-related safety detentions divided by the number of distinct arrivals over a three-year period). Commandant (CG-CVC-2) then compares this ratio to the fixed ratios of acceptable performance and assigns points to the RO according to where their safety detention ratios fall. See Table One below:

Table 1: Detention Ratios and Point Assignments.

Classification Society's 3-year Detention Ratio	Matrix Point Assignment
A detention ratio less than 0.5%	0 Points
A detention ratio equal to 0.5% or less than 1%	3 Points
A detention ratio equal to 1% or less than 2%	5 Points
A detention ratio equal to or greater than 2%	Priority I

D. COMPLIANCE TARGETING MATRIX INSTRUCTIONS (STEP I & STEP II)

1. Step I: ISPS/MTSA Security Compliance Targeting Matrix

As previously stated, the ISPS/MTSA Security Compliance Targeting Matrix is a MISLE-embedded targeting tool for the COTP or OCMI to screen a particular vessel scheduled to arrive and determine the examination priority. This matrix applies to all vessels subject to SOLAS and MTSA. PSCOs should familiarize themselves with the matrix and its processes because MISLE may not consider the downgrading clauses or other external factors that affect the total score and exam priority. In the event that manual screening of vessels is required, Commandant (CG-CVC-2) will provide the relevant information for completing the matrix via message traffic and CG Portal. The score calculated for a particular vessel will determine whether the Coast Guard will examine a vessel at sea, examine a vessel in port, or not target the vessel for examination (note vessels not targeted for examination may be subject to random examination).

STEP I: ISPS/MTSA Security Compliance Targeting Matrix				
COLUMN I SHIP MANAGEMENT	**COLUMN II** FLAG STATE	**COLUMN III** RECOGNIZED SECURITY ORGANIZATION	**COLUMN IV** SECURITY COMPLIANCE HISTORY	**COLUMN V** LAST PORTS OF CALL
ISPS II Owner or operator, if new owner or operator since last ISPS exam.	**ISPS II** If new flag since last ISPS exam.	**ISPS I** 3 or more RSO-related major control actions in the past 12 months.	**ISPS I** Vessel with an ISPS-related denial of entry/expulsion from port in past 12 months (3).	**ISPS I** Vessels having called upon, in their last 5 ports of call, ports listed in the *Federal Register* as not compliant with the ISPS Code. Also refer to CG-CVC monthly targeting update.
5 Points Owner, operator, or charterer associated with one ISPS-related denial of entry or ISPS-related expulsion from port in past 12 months or 2 or more ISPS/MTSA Control Actions in a 12 month period.	**7 Points** SOLAS Vessels(1) Flag State has a CAR 2 or more times the overall CAR average for all flag States.	**5 Points** 2 RSO-related major control actions in the past 12 months.	**ISPS II** If matrix score does not result in ISPS I priority & no ISPS compliance exam within the past 12 months.	**ISPS II** If matrix score does not result in ISPS I priority above and if the port or country is designated ISPS II per the CG-CVC monthly targeting update.
	2 Points SOLAS Vessels(1) Flag State has a CAR between the overall CAR average and up to 2 times overall CAR average for all flag States.	**2 Points** 1 RSO-related major control actions in the past 12 months.	**5 Points** Vessel with an ISPS/MTSA-related detention in the past 12 months.	**CONDITIONS OF ENTRY PRIOR TO ENTERING U.S.** For last 5 ports, list of countries and/or port facilities, as specified by *Federal Register*, found without effective anti-terrorism measures.
	7 POINTS Non-SOLAS Vessels (1)(2). Flag State has a CAR 2 or more times the overall CAR average for all flag States.		**2 Points** Vessel has had 1 or more other ISPS / MTSA control actions in the past 12 months (4).	
Total:	**Total:**	**Total:**	**Total:**	**Total:**
Total Targeting Score:_____			**Vessel Priority: _____**	

Sum of Columns I-V and/or column specific designation determines priority: 17 or more points = **ISPS I**
7 to 16 points = **ISPS II**
0 to 6 points = **ISPS III**

(1) Pertains solely to flag States with more than one major control action in a 12-month period. The COTP/OCMI may downgrade a vessel hailing from a targeted flag State scoring 7 to 11 points to ISPS III in accordance with the Downgrading Clause.
(2) Includes vessels from non-SOLAS signatory countries and non-SOLAS vessels from signatory countries.
(3) COTP or OCMI may downgrade a vessel's priority from ISPS I to ISPS II and ISPS II to ISPS III in accordance with the Downgrading Clause. If denial of entry is solely from failure to provide a Notice of Arrival prior to entry in the U.S., assign 2 points.
(4) Includes vessel delays, restriction of operations, and restriction of movement related to vessel security deficiencies. Does not include routine examination of the ship or lesser administrative actions.

Most recent guidance will be posted via the intranet on CG Portal.

a. Downgrade clauses. If the vessel is downgraded, it will be added to the pool of random examinations. Under the following conditions, the COTP/OCMIs may downgrade the ISPS examination priority as follows:

(1) The COTP/OCMI may downgrade a vessel hailing from a targeted flag Administration scoring 7 to 11 points to ISPS III if the vessel meets all of the following criteria:

(a) Removal of the flag Administration targeting points results in 6 or fewer points; and

(b) The Coast Guard previously examined the vessel within the past 6 months and found no serious security deficiencies (i.e., no ISPS major control actions imposed or no restriction of operations).

[1] Units should not rely on just a MISLE activity number alone appearing in MISLE for verification that an ISPS exam has taken place. Units are required to open and review the activity (to include review of the narrative) for verification that an ISPS exam was completed.

[2] There may be instances when there is no MISLE data available (system is down for repair, consecutive port calls – unit performing ISPS exam at a previous US port has not entered results into MISLE) indicating an ISPS exam has taken place, but the vessel has visited a U.S. port in the previous 6 months. Units may downgrade the vessel to an ISPS III if no MISLE data is available only after confirming with the unit at the vessel's previous US port(s) that an ISPS exam was completed.

(2) The COTP/OCMI may downgrade any vessel that scores ISPS II (7 to 16 points) to ISPS III (six or fewer points) if the vessel meets all of the following criteria:

(a) The Coast Guard performed an ISPS/MTSA Compliance Examination in the past 6 months and found no serious deficiencies during the examination that resulted in an ISPS control action (delay of vessel, restriction of movement or operation). The COTP/OCMI should not include the "Inspection of the Ship" per SOLAS Reg. XI-2/9.1.3 as an ISPS control action for this criterion.

(b) The COTP/OCMI does not have clear grounds or reliable information that the vessel does not correspond with SOLAS Chapter XI-2 and the ISPS Code (e.g. if the NOA report indicates that the ship found and detained stowaways on board, this information would provide clear grounds and would disqualify the downgrading clause).

(3) The COTP/OCMI may downgrade any vessel that scores ISPS I based solely upon Column III (RSO) to an ISPS III if the arriving vessel's last port of call (LPOC) was a U.S. port, and the LPOC's COTP or OCMI examined the vessel and found it in substantial compliance (i.e. no major control action).

(4) The COTP/OCMI may downgrade the ISPS I status resulting from a denial of entry or expulsion assigned in Column IV as follows:

(a) The Coast Guard performed an ISPS I examination subsequent to the denial of entry or expulsion and found the vessel in substantial compliance, i.e. no major control action resulted from the examination. The ISPS I exam may only be downgraded to an ISPS II (at the dock) examination unless the following exception is true.

(b) The COTP/OCMI may only downgrade an ISPS I examination and assign an ISPS III status to the vessel if the Coast Guard has performed three or more ISPS examinations since the denial of entry or expulsion and, in each case, no major control action resulted.

(c) If the Coast Guard previously denied a vessel entry to port due solely to lack of proper NOA, assign two points in lieu of ISPS I.

(5) For vessels on a voyage involving consecutive visits to U.S. ports and subject to directed ISPS I/II examination based solely upon Column V of the ISPS/MTSA Security Compliance Targeting Matrix; the COTP/OCMI may downgrade the directed examination to ISPS III based on the following conditions:

(a) The vessel visited a U.S. port subsequent to its visit to the port not maintaining effective anti-terrorism measures.

(b) The Coast Guard conducted an ISPS compliance examination at that U.S. port and found the vessel compliant and no major control action resulted.

---

2. Step II: PSC Safety and Environmental Protection Compliance Targeting Matrix

When a vessel submits a NOA, the NVMC collects, reviews and verifies specific ship information including: vessel type and size, cargo, crew and passenger lists, ship management information, security and safety compliance documentation, etc. The NVMC makes the NOA available to the National Maritime Intelligence Center (NMIC) and to the COTP/OCMI's through the Ship Arrival Notification System (SANS). The NVMC also makes the NOA accessible through MISLE.

The NMIC analyzes vessel, owner, operator, charterer, crew composition, history, etc. to determine whether there is pertinent intelligence regarding the vessel. The COTP/OCMI must prioritize and coordinate all vessels entering their AORs. As previously stated, the PSC Safety and Environmental Protection Compliance Targeting Matrix is a MISLE-embedded targeting tool for the COTP or OCMI to screen a particular vessel scheduled to arrive and determine the examination priority for resource allocation.

This matrix applies to all foreign vessels (signatory and non-signatory) destined for a port or place in the United States (as defined in 33 CFR 160.204) regardless of which international conventions (SOLAS, MARPOL, ICLL, etc.) is applicable. For example; a 450 GT foreign cargo vessel arriving in the United States has submitted their NOA accordingly; SOLAS (with a few exceptions) is not applicable; MARPOL and ICLL are applicable. PSCOs should familiarize themselves with the matrix and its processes as downgrading clauses or other external factors may be applicable which are not automatically calculated/considered by MISLE, subsequently affecting the total score/priority results.

In the event that manual screening of a vessel is required, Commandant (CG-CVC-2) will provide the relevant information for completing the matrix via message traffic or other designated means. The COTP or OCMI must refer to the NOA information, MISLE data and the provided guidance from Commandant (CG-CVC-2) for screening a vessel utilizing this matrix. The score calculated for a particular vessel will determine whether the Coast Guard will examine a vessel at sea, examine a vessel in port, or not target the vessel for examination (note that vessels not targeted for examination may be subject to random examination). For details regarding these requirements, refer to the MISLE user guides at http://mislenet.osc.uscg.mil/user_guides.aspx.

STEP II: PSC Safety and Environmental Protection Compliance Targeting Matrix				
COLUMN I SHIP MANAGEMENT	**COLUMN II** FLAG STATE	**COLUMN III** RECOGNIZED ORGANIZATION	**COLUMN IV** VESSEL HISTORY	**COLUMN V** SHIP PARTICULARS (SEE NOTE)
5 Points Listed Owner, Operator, or Charterer.	**7 Points** Flag State has a detention ratio 2 or more times overall average for all Flag States.	**Priority I** A detention ratio equal to or greater than 2%.	**Priority II** First Time to U.S or no PSC exam in the previous 12 months; or outstanding requirements issued from a previous USCG exam that require clearing.	**4 Points** General Cargo Ship Ro-Ro Cargo Ship Vehicle Carrier Passenger Ship involved in "day trips" or ferry service.
	2 Points Flag State has a detention ratio between the overall and up to 2 times overall average for all flag States.	**5 Points** A detention ratio less than 2% but greater than or equal to 1%.	**5 Points Each** Detention, denial of entry, or expulsion in the previous 12 months.	**2 Points** Bulk Carrier Refrigerated Cargo.
		3 Points A detention ratio less than 1% but greater than 0.5%.	**1 Point Each** COTP restricted the operations of the vessel for safety related issues in the previous 12 months (including LODs); or Reportable Marine Casualty in the previous 12 months; or Marine violation in the previous 12 months.	**1 Point** Oil or Chemical tanker.
		0 Points A detention ratio less than 0.5%.		**SHIP AGE** (ADD OR SUBRACT POINTS) 0-4 years - subtract 3 5-9 years - subtract 2 10-14 years - add 0 15-19 years - add 3 20-24 years - add 5 25+ years - add 7 **Note:** For **QUALSHIP 21** vessels only (regardless of vessel type); points should not be added in this column, but points can be subtracted for age.
Total:	**Total:**	**Total:**	**Total:**	**Total:**
Total Targeting Score: _____			**Vessel Priority: _____**	
Sum of Columns I-V and/or column specific designation determines priority: 17 or more points = **Priority I Vessel (PI)** 7 to 16 points = **Priority II Vessel (PII)** 0 to 6 points = **Non Priority Vessel (NPV)** **(Note: See below for additional targeting matrix guidance and factors impacting exam priority)**				

a. Additional Targeting Matrix Guidance.

(1) Priority I (PI) Vessels. In addition to the point values above, a vessel is also considered a PI if involved in a marine casualty that may have affected seaworthiness or the Captain of the Port determines a vessel to be a potential hazard to the port or the environment.

(2) Priority II (PII) Vessels. In addition to the point values above, a vessel is also considered a PII vessel if there are outstanding requirements from a previous examination in this or another U.S. port that require clearing. Cargo operations or passenger embarkation/debarkation for all PII vessels may only be restricted if the Captain of the Port determines that the vessel poses a safety or environmental risk to the port.

(3) Column IV: Vessel History.

(a) If MISLE data indicates that the vessel has been the subject of a PSC detention within the past 12 months, assign five points for each detention. Commandant (CG-CVC-2) will continue to enter an inspection note after reviewing detention reports received from field units. This notice will assist in identifying vessels detained within the previous 12 months in the event manual screening is directed, although it may not include very recent detentions. Field units must check the MISLE Vessel Critical Profile to determine whether any recent detentions have occurred prior to completing this column.

(b) If MISLE data indicates that the vessel has been the subject of any other form of operational control within the past 12 months (i.e., COTP Order or Customs hold), assign one point for each incident. Do not assign multiple points if the field unit took more than one control action for a single incident (i.e.; issued an IMO Detention and a COTP Order – even if multiple activities were assigned to the single incident).

(c) If MISLE data indicates that the vessel has been involved in any marine casualty or pollution cases within the past 12 months, assign one point for each case.

(d) If MISLE data indicates that the vessel has been the subject of a marine violation, except for pollution, within the past 12 months, assign one point for each violation case.

(e) The total points in Column IV are unlimited.

(4) Column V: Ship Particulars. The criterion contained in this column is self explanatory for scoring. For vessels currently enrolled in the QUALSHIP 21 program, points should not be added based on ship type, but can be subtracted for age.

b. Downgrade clauses. If the vessel is downgraded, it will be added to the pool of random examinations. Under the following conditions, the COTP/OCMIs may downgrade the PSC examination priority as follows:

(1) If the vessel has scored either a PI or PII and has had a Coast Guard PSC examination within the last 6 months with no serious deficiencies, the exam may be downgraded to an NPV.

(2) Priority II status for vessels not receiving a PSC exam in the previous 12 months may be relaxed to an NPV status for freight vessels enrolled in the QUALSHIP 21 program (which is subject to biennial PSC examination). Annual exams are no longer required (freight ship only) provided the vessel remains in a QUALSHIP 21 status and has received a PSC exam within the last 2 years. The relaxing of the PII designation is not applicable to any vessel required to hold a COC (tank, chem., etc.) as U.S. domestic law dictates that an annual exam must occur to maintain a current COC.

E. RANDOM PSC EXAMINATION SELECTION PROCESS

1. Random PSC Examination Philosophy

Random PSC examinations, in addition to the examinations that result from the targeting process, are important tools that provide a strong deterrent against subversive actions or substandard operations. If vessel targeting falls into a predictable pattern, we leave open an avenue for organizations to understand and study ways to subvert the targeting systems and possibly allow substandard ships into U.S. ports without examination. A random examination selection process injects unpredictability into the targeting process and undercuts those intending to subvert our targeting systems. Accordingly, we must ensure that our random examination selection process has no pattern. A truly random pattern plays a role in the success of our program and provides a nationwide methodology for making random examination selections. COTPs/OCMIs should conduct random PSC examinations at their discretion.

2. Concept and Applicability

Our stated goal is to encourage random examinations on vessels that arrive in the United States which the Coast Guard does not already target for an ISPS/MTSA Security Compliance Examination or a PSC Safety and Environmental Compliance Examination. At

the COTP's discretion, the COTP may target a vessel not targeted for one of these examinations for a random examination comprised of both a PSC safety and environmental compliance examination and an ISPS/MTSA Security Compliance examination. The COTP must conduct a random examination to the same scope as targeted PSC and ISPS examinations. Note in particular that vessels currently enrolled in the QUALSHIP 21 program and vessels that hold a valid Certificate of Compliance are subject to random ISPS/MTSA Security Compliance Examination but not random PSC Safety and Environmental Compliance Examination. The Coast Guard will conduct security examinations on a random basis for vessels not designated as high interest vessels. Separate guidance addresses this random selection process.

---

3. Process

For a truly random process, select vessels for examination from the population of vessels not targeted for ISPS/MTSA Security Compliance Examination or PSC Safety and Environmental Compliance Examination. For example, a vessel targeted for a PI PSC examination should not be selected for a random ISPS/MTSA Security Compliance Examination, as this will affect the quality of the randomness and will not enable us to meet vessel examination goals. Using this method will allow the Coast Guard to visit more vessels, during which PSC personnel will effectively check for evidence of non-compliance with all applicable domestic and international standards.

---

4. MISLE Documentation

In order to better allot our resources, this random process will enable us to analyze and improve the effectiveness of our targeting matrices. To that end, it is imperative that units document these random examinations accurately in MISLE. When conducting a random examination for ISPS/MTSA/PSC, the inspection type will be 'Vessel Inspection/PSC Exam' and the sub category will include the following in the pull down menu: Random ISPS/MTSA/PSC. This will help the program fine tune the process and improve the matrices. The end goal will be better resource allocation and a better system of targeting poor performers.

F. TARGETING DECISION AND LOCATION (STEP III)

The ISPS/MTSA Security Compliance Targeting Matrix and PSC Safety and Environmental Protection Compliance Targeting Matrix evaluate a vessel's relative risk of noncompliance with maritime security and safety standards and results in the assignment of points. Each matrix will provide a total that corresponds to the designations of ISPS I/ISPS II/ISPS III and PI/PII/NPV. Once this evaluation is complete, the COTP or OCMI must decide on the location and timing of the boarding/examination as well as appropriate risk mitigation measures.

ISPS I and PI examinations require a significant commitment of resources and time as they require PSC personnel with significant skill sets and they will occur prior to entry at a COTP/OCMI designated location (usually at the sea buoy). They may also result in some type of risk mitigation measure during the inbound transit such as vessel escort or armed personnel onboard. If an ISPS I or PI vessel requires risk mitigation measures, then it should remain at sea or divert to a secure anchorage until the COTP or OCMI can ensure such measures are in place. The COTP or OCMI must prioritize the use of resources to ensure that the USCG targets those vessels representing the highest risk to the port from both a security and safety aspect. Because conditions may vary considerably between ports, piers, and even individual vessels, the decision to examine a vessel after dark is left to the discretion of the local OCMI/COTP. A blanket policy of not examining vessels after dark is unacceptable. Each situation must be individually evaluated based upon existing or forecast weather, sea conditions, resource limitations, ambient lighting, and/or the availability of artificial lighting. The local OCMI/COTP should work with vessel owners, operators, and agents to accommodate scheduling exams without compromising the safety of examination teams.

---

1. ISPS I Vessels and Priority I (PI) Vessels

a. General. The COTP or OCMI should examine ISPS I and PI vessels prior to port entry. In general, this means within the 12-mile territorial sea limits, but prior to crossing the headlands or entrance into the port. The COTP or OCMI may downgrade an at-sea examination to an in-port examination, with District approval, if the at-sea examination presents a risk to personnel or the logistics of an at sea examination are impractical. In designating the at-sea examination location, the COTP or OCMI should consider local geography, the safety and security of the port, space for maneuvering, and safety of personnel during at sea transfers.

b. PI exams following a marine casualty that affects seaworthiness. The PSC targeting matrix requires a PI PSC exam following a marine casualty that affects seaworthiness. In such cases, there are a number of factors to consider in determining the location of the exam, the scope, and the proper way to document the exam in MISLE.

(1) Following a marine casualty for an inbound or outbound ship, the COTP must evaluate a number of safety and logistical concerns when determining the appropriate operational controls (tug assistance, daylight transit, additional watchkeepers, etc.) and post casualty exam location. The COTP has the discretion to conduct the post casualty exam at sea or in port based on a risk assessment including the condition of the vessel, operational controls in place, complexity of the waterway and any transits, and other local factors.

(2) In general, a full PSC exam should be conducted in these cases. However, the scope of the exam may be reduced for ships which have had a satisfactory Coast Guard PSC exam within the previous 3 months (with no major deficiencies). This reduced scope exam should focus on the part of the ship, its equipment, and/or crew affected by the casualty. The exam team should always be cognizant of the overall condition of the vessel and should conduct a walk around of the deck and engine room in order to form an overall impression of the vessel and its substantial compliance with the applicable conventions. PSCOs should expand to a full PSC exam if the vessel does not appear to be in substantial compliance.

(3) For post-casualty exams that occur prior to port entry, a PI Safety Exam shall be entered into MISLE. If the exam takes place after port entry, an NPV Safety Exam should be entered into MISLE unless the vessel is scheduled for a PII Safety Exam. For vessels that have had a satisfactory PSC exam completed with the previous 3 months, and the reduced scope safety exam is not expanded into a full PSC exam, an In Service Inspection shall be entered into MISLE with a detailed narrative on the scope of the exam.

---

2. ISPS II and Priority II (PII) Examinations

While ISPS II and PII designated vessels theoretically represent a smaller risk, they still require assignment of significant resources. PII exams will normally be conducted pier-side prior to the loading or offloading of cargo and passengers. ISPS II examinations should begin before loading or offloading commence, but once the PSC team is satisfied that loading/offloading operations may begin, the team may authorize such operations so that security procedures related to cargo and passenger embarkation operations may be observed. The COTP or OCMI ultimately has to make a determination of what the most appropriate examination procedure should be for each individual case.

---

3. ISPS III and Non-Priority Vessel (NPV) Examinations

While ISPS III and NPV designated vessels theoretically represent the smallest risk, they still require random examinations. ISPS III and NPV exams will normally be conducted pier-side at a time convenient to the COTP or OCMI. The COTP or OCMI will not hold up loading or offloading of cargo and passengers prior to commencing an ISPS III or NPV exam. Vessels on a voyage involving consecutive U.S. port calls (without calling on a foreign port), and having been examined with satisfactory results at one of the previous consecutive U.S. port calls, may be designated as ISPS III and NPV.

---

4. MISLE Reporting

Prompt MISLE reporting is critical to Coast Guard targeting and informing the chain of command regarding control actions. Field units must open an inspection activity and schedule an inspection immediately after targeting a vessel for examination. To assist other ports in correctly targeting vessels for examination, it is critical that field units quickly and properly document examination and results in MISLE. Within four hours after completing an examination, field units must, at a minimum, document in MISLE outline any detentions and major control actions taken, summarizing deficiencies that led to the control action. In addition, within four hours of completing an examination, field units must document in MISLE all outstanding deficiencies requiring follow-up Coast Guard action. Units may complete full MISLE entries at a later time.

G. NOTICE OF ARRIVAL (NOA) REGULATORY INTERPRETATIONS

1. Definition of "port or place of destination"

a. Background. The NOA regulations of 33 CFR 160.204 define "port or place of destination" as "any port or place in which a vessel is bound to anchor or moor". This definition led to varying interpretations of "port or place" within the Coast Guard and maritime industry. This is important because vessels arriving at a port or place when operating solely between ports within a single COTP zone are exempt from submitting an NOA (33 CFR 160.203(b)(2)). However, vessels carrying certain dangerous cargoes (CDCs) are not exempt, and must submit an NOA for any port or place of the United States, including movements within a COTP zone.

b. Interpretation and guidance. A vessel submitting an NOA when moving within ports or places of a COTP zone (i.e. a vessel carrying CDCs) should only do so if the vessel is actually moving from one port to another port. Moving from one dock to another dock, one berth to another berth, or one anchorage to another anchorage within one port is not considered a transit from a "port or place" to a different "port or place" and therefore, no NOA is required.

The regulation also specifies that a port or place of destination is where a vessel is bound to anchor or moor. COTPs should not apply this definition to a sea buoy or pilot station. Requiring arriving vessels to submit the NOA based on arrival at a sea buoy or pilot station is not consistent with the CFR. All NOAs to U.S. ports or places should address where the vessel is bound to anchor or moor.

c. Notice of Policy. The Coast Guard's interpretation of this policy was communicated to the public via a Notice of Policy in the Federal Register (71 FR 62210).

2. Interpretation of "operating" as it relates to exemptions in 33 CFR 160.203(b)

a. Background. If not carrying CDCs or controlling another vessel carrying CDCs, vessels operating exclusively within a COTP zone (33 CFR 160.203(b)(2)) and towing vessels and barges operating solely between port or places in the continental United States (33 CFR 160.203(b)(4)) are exempt from the NOA requirements. This exemption raised questions regarding how far in the past that "operating solely" and "operating exclusively" extends. In other words, does the language "operating solely" and "operating exclusively" mean that a vessel can never visit a foreign port or travel outside the COTP zone to be eligible for the exemption?

b. Interpretation and guidance. When applying applicability and exemptions to specific vessels in determining whether or not an NOA is required, units should consider the exemptions in the context of "operating" on a particular transit from one point of departure to the next point of arrival. "Operating" should be applied to the vessel's current and particular transit. "Solely" and "Exclusively" should be applied to the vessel's current particular transit. For instance, if a vessel departs a foreign port, bound for a U.S. port, it is not operating solely within the U.S. and is not eligible for the exemption. If the same vessel then departs a U.S. port, bound for another U.S. port, it is now currently operating solely within the U.S. and may be eligible for the exemption.

CHAPTER 5: PROCEDURES APPLICABLE TO FOREIGN FREIGHT VESSELS

A. GENERAL PROVISIONS

Each foreign vessel arrival shall be screened for PSC examination in accordance with the targeting procedures outlined in MSM Volume II, Material Inspection, COMDTINST M16000.7 (series), Section D, Chapter 4.

B. COMPLIANCE WITH U.S. REGULATIONS

In addition to U. S. regulations under Title 33 Code of Federal Regulations (CFR), foreign vessels are also subject to the requirements of the Hazardous Materials Transportation Act (HMTA) (49 U.S.C. 1802 et seq.) when in U.S. waters. The applicable regulations are found in 46 CFR Part 150 and 49 CFR Parts 107 and 171-179.

C. FREIGHT VESSEL EXAMINATIONS

1. Scheduling

Per 33 CFR 160.202, most commercial vessels are required to submit a Notice of Arrival (NOA). Those commercial vessels that are not required to submit a NOA may be discovered in port during harbor patrols or from information provided by Vessel Traffic Services, local pilots, or local agencies such as the Maritime Administration or Port Authority. Using the targeting procedures described in MSM Volume II, Material Inspection, COMDTINST M16000.7, (series), Section D, Chapter 4, Officers in Charge Marine Inspection (OCMIs) or Captains of the Port (COTPs) must identify high priority vessels entering their zones for examination. After identifying those vessels to be examined, an activity must be opened in MISLE with the PSC team members assigned following the team make-up requirements in MSM Volume II, Material Inspection, COMDTINST M16000.7 (series), Section D, Chapter 1.

2. Pre-exam Preparations

Prior to conducting an exam, the PSCO must review the vessel's MISLE data to determine the scope of the examination (including name, flag, call sign, class society, recognized organization, tonnage, date and port of last Coast Guard exam, recent spills, outstanding discrepancies, status of certificates and documents, etc.). A check of the vessel's history in MISLE may indicate that certain information must be confirmed or updated during the exam to keep MISLE records current. MISLE may also indicate that the vessel has outstanding discrepancies that were required to be corrected. Since 49 CFR Parts 107 and 171 do not

require a carrier's registration to be on board, it will not always be possible to check for that during an exam. However, if registration or lack thereof is verified prior to the exam, appropriate action can be taken at the time of the exam if packaged hazardous material is being carried by the vessel.

---

3. Coordination with the National Cargo Bureau (NCB)

Determine if the National Cargo Bureau (NCB) intends to board the vessel during the port call. NCB activities are limited to cargo requirements and do not address the non-cargo vessel requirements (i.e., SOLAS, MARPOL, STCW, ILO, navigation safety and pollution prevention). When the NCB is attending the vessel, the PSCO should concentrate on those areas not addressed by the NCB with reliance on the NCB report to ascertain the vessel's compliance with applicable cargo requirements.

---

4. Approaching the Vessel

When approaching the vessel, the PSCO should look for the following:

a. Cargo transfer operations.

b. Placards and labels attached to cargo being loaded or waiting to be loaded (noting nature of cargo involved).

c. Evidence of cargo leaks or pollution dockside, around palletized or containerized cargo, and around the vessel.

d. Warning signs and signals.

e. General condition of the facility (or other vessel) adjacent to the vessel.

f. General condition of the vessel.

g. Location of the vessel's load line (note: if both port and starboard load line marks are submerged, the vessel might be overloaded. Carefully record all draft readings and note the time; notify the COTP or OCMI.

h. Vessel's draft readings.

i. Suitability of the moorings and the gangway.

j. General evidence of unsafe practices or conditions.

k. Evidence vessel is in compliance with ISPS, such as maintaining a gangway watch.

---

5. Boarding the Vessel

Upon boarding the vessel, the PSC team must identify themselves as representatives of the U.S. Coast Guard, Sector, Marine Safety Unit, etc., as appropriate, and ask to see the master or chief mate (or the senior deck officer on duty). Team members must introduce themselves and explain the purpose of the visit is to conduct a PSC Examination.

a. Inform the master that the examination will consist of a document check, a general examination, operational testing of specific equipment (i.e. steering, firemain, and navigation equipment as a minimum) and emergency drills. If applicable, it may also include a follow-up on any outstanding deficiencies. Ask if there is any ongoing work, safety concerns, and/or injured or ill crew onboard.

b. Ensure that the master understands that the PSC team reserves the right to expand the examination if "clear grounds" are established concerning the validity of the vessel's certificates (see MSM Volume II, Material Inspection, COMDTINST M16000.7A (series), Section D, Chapter 1). The depth and scope of the examination must be determined by the PSC team based on their observations. In some cases, a satisfactory check may be accomplished simply by seeing a piece of equipment, while in others it may be necessary to look, question, or test more closely.

---

6. Examination of Documents

Review pertinent vessel documents, certificates, and officers' licenses to make sure they are current.

Determine whether the vessel's hull, deck, internal structure, cargo hatches, piping or required equipment has been damaged or undergone repair since the last Coast Guard examination. Also determine whether any outstanding conditions of class exist. Check to see if the vessel is overdue for dry-docking or repair.

If, after boarding the vessel, it is determined from records aboard that the vessel is not due for an exam or that the vessel's exam priority is lower than previously determined, advise the vessel's officer that you will conduct a less extensive exam. At a minimum, the PSCO should complete a cursory document check and a general "walk through" exam to ensure that no obvious deficiencies exist.

The document check should include the following as appropriate:	
❑ Certificate of Registry	❑ Oil Transfer Procedures
❑ Classification Society Certificate	❑ Dangerous Cargo Manifest
❑ SOLAS Safety Construction Certificate	❑ Stowage Plan
❑ SOLAS Safety Equipment Certificate	❑ Hazardous Materials Training Records
❑ SOLAS Safety Radiotelegraphy Certificate	❑ Pollution Prevention Compliance Letter
❑ SOLAS Safety Radiotelephone Certificate	❑ ISM Certificates
❑ Load Line Certificate	❑ Shipboard Oil Pollution Emergency Plan
❑ Tonnage Certificate	❑ Cargo Securing Manual
❑ Certificate of Financial Responsibility	❑ Garbage Management Plan
❑ Safe Manning Document	❑ Oil Record Book
❑ International Oil Pollution Prevention Certificate or equivalent	

a. IOPP Certificate. Review the International Oil Pollution Prevention (IOPP) Certificate.

(1) For vessels whose flag State is not signatory to the International Convention for the Prevention of Pollution from Ships 1973, as modified by the Protocol of 1978 (MARPOL 73/78), ensure equivalent documentation is on board and Coast Guard-acceptable.

(2) Review the Oil Record Book to ensure that it has been maintained properly.

(3) MSM Volume II, Material Inspection, COMDTINST M16000.7 (series), Section E, Chapter 1 provides additional policy regarding MARPOL compliance verifications.

b. Safe manning document. SOLAS, Chapter V, Regulation 13 requires all ships of 500 GT and more on international voyages to be issued a safe manning document. This document states what the flag State considers to be the minimum complement necessary to ensure the vessel is safely manned. There is no standard format for a safe manning document, though some guidance on the elements to be included in the document can be found in IMO Resolution A.890(21) as amended by A.955(23). There are no specific manning scales that can be considered as an internationally agreed standard for assessing the adequacy of the crew complement on a seagoing ship. The PSCO must use good judgment in questioning a flag State's determination

of the adequacy of a vessel's manning level.

(1) Every foreign flag vessel of 500 GT or more visiting a U.S. port should have a safe manning document issued by the vessel's flag State on board. If the document is in a foreign language, an English translation is required to be available. The document should contain the following information:

(a) Identification of the ship.

(b) A table showing the numbers and grades of personnel required to be carried, together with any special conditions or limitations based on the particulars of the ship or the nature of the service upon which it is engaged.

(c) The date of issue and expiration along with a signature for and the seal of the administration.

(2) If a safe manning document is available, the flag State is a party to SOLAS, the information in the document is complete, and the required crew complement is consistent with normal expectations for a ship of its size and service, no further action is required with respect to the manning document itself. Attention may then be directed to determining that the crew is appropriately certificated under the STCW convention (as discussed below).

(3) STCW 95/2010. Refer to MSM Volume II, Material Inspection, COMDTINST M16000.7 (series), Section D, Chapter 1, for additional STCW compliance policy.

(a) Flag States not party to STCW 78 or 95. Confirm that the flag State is not party to the Convention. If not, follow the guidance in MSM Volume II, Material Inspection, COMDTINST M16000.7 (series), Section D, Chapter 2.

c. Hazardous material training. 49 CFR 176.13 requires records of the hazardous materials training required by 49 CFR Part 172 to be maintained aboard the vessel. For vessels carrying hazardous materials, PSCOs should verify documentation that personnel have received appropriate training is on board.

d. Dangerous cargo manifest check. The PSCO should ask if the vessel is (or will be) carrying any packaged hazardous materials. If it is, ask to see the vessel's dangerous cargo manifest (DCM). Check the DCM to ensure completeness. Also note the nature and stowage locations of the various hazardous materials from the DCM and verify a few specific hazardous material shipments are stowed as required. Verify the following items on the DCM:
(1) Vessel's name, flag, official number, and/or call sign are listed.

(2) General cargo is not listed.

(3) Proper shipping names and identification numbers are listed (no improper use of dittos or abbreviations for proper shipping name).

(4) Proper hazard classifications are entered without dittos or abbreviations.

(5) The number and description of packages and their gross weights are properly entered.

(6) Any additional description required by 49 CFR 172.203 (i.e., Limited Quantity, Poison, Reportable Quantity, etc.) is listed.

(7) The stowage location for each hazardous cargo is accurately indicated.

(8) Emergency response telephone number is listed for each cargo listed.

(9) It is signed and dated by the preparer.

(10) It is signed by the master or licensed deck officer.

e. Garbage Management Plan (GMP). These are written procedures for collecting, storing, processing, and disposing of garbage, including the use of equipment on board.

(1) The GMP should designate the person responsible for carrying out the plan and should be in the working language of the crew.

(2) The GMP was made mandatory by an amendment to MARPOL 73/78 that added regulation 9 to Annex V. The GMP requires ship operators to track their garbage and take notice of what happens to it.

(3) These plans should be examined during all PSC exams. Missing GMPs are not sufficient grounds, in and of themselves, for a detention.

D. MONITORS

Monitors should normally only be conducted with scheduled exams and deficiency follow-ups. Generally, the PSC exam should start with the examination of documents. However, if a cargo transfer is in progress upon arrival, it may be prudent to start the monitor first, particularly if the transfer is near completion.

---

1. Bunkering operation monitor

If the vessel is engaged in bunkering operations, the PSCO should observe the bunker transfer operation and determine that the Person in Charge (PIC) is designated in writing and the operation is following the vessel's transfer procedures as required by 33 CFR 156.120. (See MSM Volume II, Material Inspection, COMDTINST M16000.7 (series), Section D, Chapter 6 for more information.)

---

2. Dry Cargo Monitor

Observe the transfer of hazardous materials and walk through the vessel to check for compliance with the packaged or solid bulk hazardous material handling requirements. Spot check the hazardous materials for compliance with the DCM. At a minimum, the following should be examined:

a. On deck.

(1) Observe the cargo handling equipment and procedures to ensure that cargo is properly secured and is not damaged during transfer.

(2) Ensure that only acceptable hazardous materials are loaded or carried on board.

(3) Spot check containers and packaged cargo for proper marking, labeling, and placarding.

(4) Look for damaged or leaking cargo containers and packages.

(5) Look for smoking and hot work violations.

b. In holds. If a cargo hold is being worked, do not stop the operation unless you see or have reason to suspect a violation. Do not enter holds that are being worked. PSCOs should only enter holds after reviewing the ship's safety requirements for hold entry and then only when escorted by one of the vessel's mates. When inspecting a hold, look for the following:
(1) Ensure that the hold is clean and dry.

(2) Check bilges for cargo residue.

(3) Check containers and packaged cargo for proper marking, labeling, and placarding.

(4) Look for damaged or leaking cargo containers and packages.

(5) Check for proper stowage and segregation of hazardous materials for compliance with 49 CFR 176.83.

(6) Note any inoperative or faulty cargo handling equipment.

(7) Where flammable or combustible liquids are handled, ensure that electrical fixtures are explosion proof and that only approved, power-operated industrial trucks are used.

E. UPON COMPLETION OF THE EXAMINATION

Inform the master of all deficiencies noted, what corrective actions are required, and when those actions must be completed. The decision to impose operational controls should be made by the COTP, except in cases of imminent danger. The PSCO should be prepared to make appropriate recommendations to the COTP regarding the actions to be taken on deficiencies. If the deficiencies make the vessel unsafe to proceed to sea or present an unreasonable risk to the environment, the COTP should detain the vessel under the provisions of the appropriate international convention.

Deficiencies that do not make a vessel unsafe to proceed to sea or present an unreasonable risk to the environment should be handled by requiring corrective measures to be accomplished within a specified time frame or prior to returning to the United States. If time permits, assist in correcting simple problems (such as problems with transfer procedures or maneuvering information) while on scene. Give the master (or mate) sufficient guidance to correct any outstanding problems. Provide the master a written record of the exam that includes a listing of all discrepancies and the corrective actions required.

F. POST-EXAM ACTIONS

When departing the vessel, the PSC team should watch for any signs of pollution around the vessel and the facility (or other vessels) and any other unsafe situations. A brief monitor of the shoreside part of the operation should also be conducted before leaving the area. Complete the required MISLE data entries as outlined in the applicable Mission Management System procedure. For the benefit of other Coast Guard units, enter case information as soon as possible after return to the unit. In all cases, MISLE should be updated within 48 hours of exam completion. If the vessel is detained, follow the procedures in MSM Volume II, Material Inspection, COMDTINST M16000.7 (series), Section D, Chapter 2.

CHAPTER 6: PROCEDURES APPLICABLE TO FOREIGN TANK VESSELS

A. GENERAL PROVISIONS

As required by 46 U.S.C. 3714, each foreign tank vessel must undergo a compliance verification exam conducted by the Coast Guard at its initial U.S. port of call and at least annually thereafter. The compliance exam is called a Certificate of Compliance (COC) Exam. Per 46 U.S.C 2101 (39), the term tank vessel means a vessel that is constructed or adapted to carry, or that carries, oil or hazardous material in bulk as cargo or cargo residue. Based on this definition, the COC requirement applies to vessels carrying oil and oil products as well as chemical and gas carriers.

Upon completion of the COC exam, the Coast Guard issues a Certificate of Compliance to the vessel. The certificate is valid for 24 months; provided an annual exam is completed within 90 days of the one year anniversary of the COC's issue date (see C.1 below). Per the targeting procedures in MSM Volume II, Material Inspection, COMDTINST M16000.7 (series), Section D, Chapter 4, the COC exam is considered a Port State Control (PSC) exam.

B. COMPLIANCE WITH U.S. REGULATIONS

a. Foreign tank vessels operating in U.S. waters must comply with--

   (1) The Pollution Prevention Regulations (33 CFR Parts 151, 155-157, and 159);

   (2) Notice of Arrival regulations (33 CFR Part 160);

   (3) The Navigation Safety Regulations (33 CFR Part 164);

   (4) The Bulk Liquid, Liquefied Gas, or Compressed Gas Hazardous Materials Regulations (46 CFR Parts 153-154);

   (5) 46 CFR 35.01-1; and

   (6) The cargo venting and handling system requirements in 46 CFR 35.30 and 35.35.

b. Title 46 CFR 30.01-5(e)(2) also requires foreign flag tank vessels operating in U.S. waters to comply with 46 CFR 31.10-21a, mid-body gauging; 46 CFR 32.53, Inert Gas Systems (IGS); 46 CFR 34-05-5(a)(2), Foam Systems; and 46 CFR Part 39, Vapor Control Systems.

c. For guidance on the application of 33 CFR Part 157, refer to Navigation and Vessel Inspection Circular (NVIC) 10-94.

---

1. Inert Gas Systems (IGS)

The IGS requirement in 46 CFR 32.53-1 applies to all existing (46 U.S.C. 3701) foreign flag crude oil tankers and new product carriers. Liquefied gas carriers and vessels that carry only grade E cargo at or below a temperature lower than 5 degrees Celsius below its flash point are exempted.

a. Existing product tankers between 20,000 and 40,000 Deadweight Tons (DWT) are only required to have IGS if tank washing machines with a capacity of more than 60 m^3 per hour (high-capacity tank washing machines) are installed. The Form B supplement to the International Oil Pollution Prevention Convention (IOPP) Certificate should be checked to verify that tankers carrying products without IGS are designated as product tankers only.

b. Both U.S. regulations and international conventions allow exemptions from the IGS requirements for existing crude tankers that are less than 40,000 DWT and not fitted with high-capacity tank washing machines.

   (1) Exemptions for foreign flag vessels operating in U.S. waters are outlined in 46 CFR 32.53-3.

   (2) For foreign vessels, flag State exemptions must be submitted with a request for a U.S. exemption to Commandant (CG-ENG).

   (3) To date, no exemptions have been granted for vessels operating in U.S. waters.

c. IGS on foreign vessels are usually designed to meet International Convention for the Safety of Life at Sea (SOLAS) Regulation II-2/62 and may not meet every part of 46 CFR 32.53-10 through 32.53-85.

   (1) IGS that meet SOLAS Regulation II-2/62 should be accepted on foreign tank vessels as equivalent to U.S. regulations.

   (2) IGS should be inspected to verify compliance with either SOLAS or U.S. regulations as part of the COC exam.

---

2. Vapor Control Systems (VCS)

To transfer vapors of a flammable or combustible cargo with a waterfront facility regulated under Title 33 CFR Part 154, a vessel's COC must be endorsed by the Coast Guard stating that the VCS is approved by the Marine Safety Center (MSC) or certified by the vessel’s classification society under 46 CFR Part 39.10-13(c). Details on obtaining a COC endorsement are in 46 CFR 39.10-13(d). Certification by the vessel’s classification society must include the following items:

a. Vessel identification (name, classification or official number, call sign, flag).

b. A statement that the vessel's VCS was reviewed and meets the requirements of 46 CFR Part 39.

c. A statement that the inert gas manual has been amended in accordance with 46 CFR 32.53-85(b), if applicable.

d. A statement that the oil transfer procedures have been amended in accordance with 33 CFR 155.750(d).

e. The cargo tanks to which the certification applies.

f. The maximum allowable liquid transfer rate (cubic meters per hour).

g. The maximum allowable vapor density.

h. A list of cargoes for which the VCS was reviewed.

NOTE: The Coast Guard has not reviewed all the cargoes being shipped in bulk for VCS requirements. The current list of cargoes that have been assigned a VCS category may be obtained by contacting the MSC.

---

3. Foam Systems

The requirements for foam systems in 46 CFR 34.05-5(a)(2) are applicable to new foreign flag tankers of 20,000 DWT and greater. ("New" is defined in 46 U.S.C. 3701.) No other section of 46 CFR 34.05 specifically applies to foreign vessels.

a. 46 CFR 30.01-5(e)(2) requires deck foam systems on new foreign tankers in U.S. trade. Such a foam system should meet the requirements of SOLAS, not U.S. regulations.

b. The foam concentrate used in the vessel’s foam system should be suitable for the cargoes carried. Water miscible products, such as many alcohols, ketones, esters, ethers, amines, aldehydes, acids, and anhydrides, tend to destroy regular foam by dissolving the water from the foam blanket. For these products, special "polar solvent" or "alcohol resistant" foams must be used. Manufacturers' literature on the foam concentrate should be requested from the vessel’s master if there is any question on compatibility.

---

4. High-Velocity Pressure/ Vacuum (P/V) Valves

a. High-Velocity P/V valves installed aboard foreign tankers may not have flame screens installed on the pressure discharge side. The requirement in 46 CFR 162.017-3(n) to have flame screens fitted on openings to the atmosphere is not necessary on the pressure discharge side of this type valve because:

(1) High vapor velocities in the pressure discharge piping preclude the passage of flame, thus making the flame screen unnecessary; and

(2) Installation of a flame screen would defeat the purpose of a high velocity P/V valve by retarding the flow of vapor to the atmosphere.

b. For these type valves, the foreign vessel must have on board evidence of acceptance from its flag administration and its recognized classification society.

NOTE: All other openings to atmosphere on such valves must have flame screens as prescribed in the regulations. There is no relaxation of the flame screen requirement for P/V valves that are not of the high-velocity type.

C. CONDUCTING CERTIFICATE OF COMPLIANCE EXAMS

1. Scheduling

a. Using the targeting procedures described in MSM Volume II, Material Inspection, COMDTINST M16000.7 (series), Section D, Chapter 4, Officers in Charge Marine Inspection (OCMI) and/or Captains of the Port (COTP) must identify high priority vessels entering their zones for examination.

b. After identifying those vessels to be examined, an activity must be opened in MISLE with the PSC team members assigned in accordance with the team make-up requirements in MSM Volume II, Material Inspection, COMDTINST M16000.7 (series), Section D, Chapter 1.E.

c. Vessel owners, operators and agents of foreign chemical tank vessels and foreign gas carriers are required by 46 CFR 153.809(a) and 46 CFR 154.150(b) to provide at least 7 days advanced notice to the OCMI/COTP that the vessel is due for a COC exam.

d. 46 CFR 2.10 establishes examination fees for all owners or operators of foreign vessels required to have a COC. Prior to conducting any COC exam, a member of the PSC team shall ensure the required vessel inspection fee has been paid. Fees must be paid prior to conducting the exam, no invoice is automatically generated in MISLE.

e. Annual exams of COC vessels. (See 46 CFR 2.01-6 for regulatory definitions). 46 U.S.C. 3714 requires tank vessels, as defined in 46 U.S.C. 2101, to undergo annual exams. Under the PSC targeted exam program, tank vessels that are overdue for an annual or renewal COC exam are Priority II examinations.

(1) Upon receiving the required notice of arrival from a COC vessel, the OCMI/COTP must review the status of the vessel's documents and exam history to check if the annual exam is due and if so, it should be carried out.

(2) To avoid delays to cargo operations, tanker owners often request an examination prior to the expiration date of their COC.

(a) In some cases, these requests have been denied due to Coast Guard resource constraints and the tanker's operations were subsequently delayed on the next voyage because the COC was expired.

(b) To avoid delays, when requested, OCMIs and COTPs are encouraged to complete COC exams if the COC is within 3 months of expiration.

(c) At the discretion of, and with the prior approval from, the local OCMI/COTP, tankers with expired COCs (renewal or annual) that are not more than 3 months past due, and with no indications that the vessel is not in compliance with applicable laws and regulations, should not be restricted from commencing cargo operations prior to an exam. However, the required exam (renewal or annual) must be completed prior to departure.

(d) Vessels that are more than 3 months beyond the expiration date of their COC renewal or annual exam must have the required exam conducted prior to commencing cargo operations.

e. Notice of arrivals (NOA) for COC vessels (33 CFR 160.202). Foreign tank vessels are required to provide a NOA prior to entering each U.S. port. The MISLE data for all COC vessels entering port that are carrying bulk dangerous cargoes should be checked to ascertain the validity of its COC and required International Maritime Organizations (IMO) certificates including the vessel's current IMO Certificate of Fitness (COF) and International Safety Management (ISM) certificates.

f. Marine chemist certification of confined spaces. During annual exams and biennial COC exams, pump room entry is a normal part of the exam.

(1) For vessels carrying Subchapter O or Subchapter D products with an established Threshold Limit Value (TLV), a Marine Chemist Certificate is required prior to

entering the pump room. Following a marine Chemist's determination that the pump room is "Safe for Workers", Coast guard personnel may enter. The pumps may run at a low speed but Coast Guard personnel should not be in the pump room while the vessel is actively transferring.

(2) A Marine Chemist Certificate is also required prior to entering a ballast tank.

(3) To minimize delays and ensure the safety of personnel, the OCMI/COTP should inform the vessel's master, agent, or owner is as soon as possible after receiving a NOA that a Marine Chemist Certificate is required prior to entry of Coast Guard personnel into these spaces. Guidance on confined space entry may be found in the MSM Volume I, Administration and Management, COMDTINST M16000.6 (series), Chapter 10.

---

2. Pre-Examination Preparations

a. Prior to arrival at the vessel, the PSCO must review the available MISLE data and applicable regulations to determine the scope of the exam.

(1) Extract the basic vessel information from the MISLE history for use during the exam (including: name, flag, call sign, tonnage, build date, exam history, recent spills, outstanding discrepancies, status of certificates and documents, etc).

(2) MISLE may indicate that certain information must be confirmed or updated during the exam to keep MISLE records current. MISLE may also indicate outstanding deficiencies that should be checked.

b. All foreign liquefied gas carriers and non-signatory chemical carriers require a Subchapter O Endorsement (SOE).

(1) The MSC enters the SOE in MISLE under the vessel's documents. For non-signatory vessels, issue and expiration dates of Certificates and addenda that have been accepted should also be entered. If a SOE does not appear in MISLE, contact the MSC to determine the vessel's status.

(2) The OCMI enters the issue and expiration dates on the SOE when it is issued to the vessel. These dates should coincide with the COC dates.

c. Chemical Tank Vessel Information Sheet (CTVIS). The CTVIS is a document developed by the MSC and is located on the CG Portal. It includes much of the general information and guidance that is included in an SOE and serves as a means for the Coast Guard to communicate with foreign chemical tank vessel owners and

operators. Although not required, it is highly recommended that this document be kept on board the vessel for reference and informational purposes. A CTVIS should be provided to the master at each exam.

d. Refer to NVIC 10-94 for guidance on double hull requirements (33 CFR Part 157).

---

3. Approaching the Vessel

When approaching the vessel, the PSCO should look for the following:

a. Cargo transfer operations.

b. The general condition of the facility (or other vessel) adjacent to the vessel being boarded.

c. Evidence of hot work in the vicinity of the transfer.

d. A red flag or red light, and warning signs.

e. The general condition of the vessel.

f. The location of the vessel's load line (if the vessel is trim and the load line mark is submerged, the OCMI or COTP should be notified).

g. The vessel's draft readings.

h. Evidence of cargo leaks or pollution.

i. Suitability of the moorings and the gangway for the tide, current, and weather conditions expected during the transfer period.

j. General evidence of unsafe conditions.

---

4. Boarding the Vessel

Upon boarding the vessel, the PSC team must identify themselves as representatives of the U.S. Coast Guard, Sector, Marine Safety Unit, etc., as appropriate, and ask to see the master or chief mate (or the senior deck officer on duty). Team members must introduce themselves and explain the purpose of the visit is to conduct an annual or biennial COC exam.

a. Inform the master that the exam will consist of a document check, a general exam,

operational testing of specific equipment (i.e. steering, inert gas system, cargo pump emergency shutdowns, firemain, and navigation equipment as a minimum) and emergency drills. If applicable, it will also include a follow-up on any outstanding deficiencies. Ask the master or vessel representative if there is ongoing work/ repairs, if there are any outstanding conditions of class and also if any member of the crew is ill or injured.

b. Ensure that the master understands that the PSC team reserves the right to expand the examination if "clear grounds" are established concerning the validity of the vessel's certificates (see MSM Volume II, Material Inspection, COMDTINST M16000.7 (series), Section D, Chapter 1). The applicable examination job aids should be followed as a guide during the exam. The depth and scope of the exam must be determined by the PSCO based on their observations. In some cases, a satisfactory check may be accomplished simply by seeing a piece of equipment, while in others it may be necessary to look, question, or witness operational tests. Ensure adequate notes and comments are well documented so that all discrepancies noted are easily understood by reviewing officials, vessel personnel, and the hearing officer (if a violation report is filed).

---

5. Examination of Documents

Review pertinent vessel documents, certificates, and officers' licenses to make sure they are current. Determine whether the vessel's hull, deck, internal structure, cargo hatches, piping, or required equipment has been damaged or undergone repair since the last Coast Guard examination. Also determine whether any outstanding conditions of class exist. Check to see if the vessel is overdue for dry-docking or repair. If, after boarding the vessel, it is determined from records aboard that the vessel is not due for an exam or that the vessel's exam priority is lower than previously determined, advise the vessel's officer that you will conduct a less extensive exam. At a minimum, the PSCO should complete a cursory document check and a general "walk through" exam to ensure that no obvious deficiencies exist.

The document check should include the following, as appropriate:	
❑ Certificate of Registry	❑ Log Entries
❑ Classification Society Certificate	❑ Cargo Information Cards
❑ IGS, COW, SBT, CBT Operations Manuals	❑ Safety Construction Certificate
❑ IGS, COW, SBT, CBT Approval Letters	❑ Safety Equipment Certificate
❑ IGS Record Book	❑ Safety Radiotelegraphy Certificate
❑ Oil Record Book	❑ Cargo Record Book
❑ Safety Radiotelephone Certificate	❑ Shipboard Oil Pollution Emergency Plan
❑ Load Line Certificate	❑ Oil Transfer Procedures
❑ International Oil Pollution Prevention Certificate or Equivalent	❑ Certificate of Compliance with Sub O Endorsement
❑ Records of Hose and Piping Tests	❑ Tonnage Certificate
❑ Certificate of Financial Responsibility	❑ Approved Procedures & Arrangements Manual
❑ Safe Manning Document	❑ Officers' Licenses
❑ Vessel Crew List	❑ Cargo Location Plan
❑ Cargo Manifest	❑ Safety Management Certificate
❑ Document of Compliance	❑ IMO Certificate of Fitness
❑ Garbage Management Plan	❑ International NLS Certificate

a. IOPP Certificate. Review the International Oil Pollution Prevention (IOPP) Certificate.

(1) For vessels whose flag State is not signatory to the International Convention for the Prevention of Pollution from Ships 1973, as modified by the Protocol of 1978 (MARPOL 73/78), ensure equivalent documentation is on board and Coast Guard-acceptable.

(2) Review the Oil Record Book to ensure that it has been maintained properly.

(3) MSM Volume II, Material Inspection, COMDTINST M16000.7 (series), Section E, Chapter 1, provides additional policy regarding MARPOL compliance verifications.

b. Safe manning document. SOLAS, Chapter V, Regulation 13 requires all ships of 500 GT and more on international voyages to be issued a safe manning document. This document indicates what the flag State considers to be the minimum complement necessary to ensure the vessel is safely manned. There is no standard format for a safe manning document, though some guidance on the elements to be included in the document can be found in IMO Resolution A.481(XII), Annex 1, and guidance to be taken into account in determining safe manning can be found in Annex 2 of that IMO resolution. There are no specific manning scales that can be considered as an internationally agreed standard for assessing the adequacy of the crew complement on a seagoing ship. The PSCO must use good judgment in questioning a flag State's determination of the adequacy of a vessel's manning level.

(1) Every foreign flag vessel of 500 GT or more visiting a U.S. port should have a safe manning document issued by the vessel's flag State on board. If the document is in a foreign language, an English translation is required to be available. The document should contain the following information:

(a) Identification of the ship.

(b) A table showing the numbers and grades of personnel required to be carried, together with any special conditions or limitations based on the particulars of the ship or the nature of the service upon which it is engaged.

(c) The date of issue and expiration along with a signature for and the seal of the administration.

(2) If a safe manning document is available, the flag State is a party to SOLAS, the information in the document is complete, and the required crew complement is consistent with normal expectations for a ship of its size and service, no further action is required with respect to the manning document itself. Attention may then be directed to determining that the crew is appropriately certificated under the STCW convention (as discussed below).

(3) STCW 95. Refer to MSM Volume II, Material Inspection, COMDTINST M16000.7 (series), Section D, Chapter 1, for additional STCW compliance policy.

(a) Flag states not party to STCW 78 or 95. Confirm that the flag State is not party to the Convention. If not, follow the guidance in MSM Volume II, Material Inspection, COMDTINST M16000.7 (series), Section D, Chapter 2.

NOTE: For tankers, the provisions of 33 CFR 164.13 concerning manned engine rooms and two licensed officers on the bridge will be relevant to a determination of whether the vessel is properly manned. Additionally, when promulgated, the regulations implementing the provisions of 46 U.S.C. 9101(a) will also be relevant.

c. Examine the COC and the SOE (for liquefied gas carriers and non-signatory chemical carriers).

(1) Ascertain that any certificates listed in the SOE are on board the vessel and are valid.

(2) Check the COC Examination Record for outstanding deficiencies.

(3) Check the cargo manifest against the cargoes authorized by the IMO Certificate of Fitness and/or the SOE. The SOE will refer to the list of cargoes contained in the IMO Certificate of Fitness and may restrict carriage of certain listed cargoes.

(4) Ensure that any special operating instructions listed in the SOE or the IMO Certificate are being observed.

d. Check the cargo manifest and tank arrangement (or the cargo location plan, if available) for compatibility of adjacent cargoes or cargoes in tanks joined by common piping or vent headers. Cargoes must be stowed in accordance with 46 CFR Subpart A - Compatibility of Cargoes. If the master claims an authorized exception to the compatibility chart, he or she must produce a copy of the letter or message from the Coast Guard granting the exception as required by 46 CFR 150.160.

6. General Examination

a. During annual or biennial COC exams, conduct a general "walk through" exam of the vessel. The general exam should include observation of required equipment on deck, in the engine room, and in after steering. Verify the adequacy, maintenance, and operation of firefighting, pollution prevention, and other equipment required by regulations. Look for obvious safety problems.

NOTE: Energizing navigation equipment during cargo operations could pose a safety hazard.

b. Structural integrity. During annual and renewal COC exams, look for evidence of long term neglect, wastage, corrosion, cracking, pitting, or casualty damage. The presence on deck of plating, sections of piping, or an excessive number of oxyacetylene tanks may indicate unauthorized repairs or other problems. Look for recent burn marks from welding. Temporary repairs, including cement boxes, epoxy patches, postage stamp inserts, and drill stopped cracks, may indicate problems. Each situation must be evaluated to determine whether the temporary repair is adequate or whether the vessel should be detained until permanent repairs are made.

c. Oil tankers over 10 years old. The Port and Tanker Safety Act of 1978, 46 U.S.C. 3714 (a)(2), requires the Coast Guard to assess the structural integrity of the hull of all tankers over 10 years of age.

d. For several years through the 1990s, mid-body ballast tanks were inspected annually by Coast Guard marine inspectors as part of the COC exam. Due to the many regulatory initiatives and industry wide improvements since the 1990’s, the need to enter ballast tanks during a PSC exam has diminished.

(1) In order to comply with the provisions of 46 U.S.C. 3714(a)(2), every effort must be made to verify the structural integrity of the vessel by external examination and a records review.

(a) The external exam must include deck, side shell, external piping, visual checks through tank openings, pump room condition, and the condition of other spaces.

(b) The records review must include a review of the most recent copy of the classification society's status report (conditions of class), dry dock survey reports, maintenance records and other class society surveys as appropriate.

(c) Should the external exam or records review reveal potential structural problems or concerns, the PSCO should consult with the OCMI and require the ballast tank(s) to be examined.

[1] OCMIs should arrange for a joint tank entry with the classification society. Proper confined space entry procedures should be followed.

[2] PSCOs must comply with MSM Volume I, Administration and Management, COMDTINST M16000.6 (series), Chapter 10, and the Safety and Environmental Health Manual Chapter 6, prior to and during all ballast tank entry examinations

[3] The marine chemist testing of the atmosphere and brief visual evaluation does not mitigate the physical hazards of coatings or muck, nor does it remove the biologic growth exposure risk.

[4] Shipping agents normally arrange for the attendance of a marine chemist to test and certify the tank as safe for workers prior to the entry of Coast Guard personnel.

[5] The PSCO should request the marine chemist to note if testing indicated any presence of hydrocarbon in the tanks tested. This information is valuable because it may indicate if a structural problem exists that has led to leaking from cargo tanks into adjoining ballast tanks.

[6] Most marine chemists will require that continuous forced ventilation of fresh air is maintained in the tank from the time of certification until the conclusion of all tank entries. PSCOs should verify that this and any other stipulations on the marine chemist's certificate have been followed prior to their entry into the tank.

[7] PSCOs should review the vessel’s confined space entry procedures prior to entering a confined space. Depending on the circumstances, PSCOs may require additional measures be provided by the vessel during tank entry, such as having vessel crewmen standing by the tank entrance with a lifeline, rescue harness, and/or self-contained breathing apparatus. In no case should a PSCO enter a ballast tank before a vessel representative enters.

(2) In all cases when significant structural problems are detected, the vessel's classification society should be notified. In addition, control action may be initiated as discussed in MSM Volume II, Material Inspection, COMDTINST M16000.7 (series), Section D, Chapter 2. The OCMI/COTP should remain

involved until the problem is resolved. If the vessel is permitted to depart port to make repairs overseas, written confirmation for the repairs from the classification society and/or flag administration will normally be required before the vessel is allowed to return a U.S. port.

d. Firefighting equipment check. In addition to the firefighting equipment exam outlined in MSM Volume II, Material Inspection, COMDTINST M16000.7 (series), Section D, Chapter 1, at least two foam monitors should be tested (without foam) simultaneously to verify the system's overall integrity, pressure and coverage per SOLAS. Additionally, determine if the foam, dry chemical, or carbon dioxide firefighting systems have been serviced within the last 2 years.

e. Cargo operations. During annual and renewal COC exams, check the following:

(1) On deck. Note the general condition of the cargo piping system and the manifolds, checking for non-permanent repairs and other irregularities.

(2) Check the materiel condition of the vent system, cargo handling system, VCS (if installed), and IGS (if required).

(3) Look for open cargo hatches, Butterworth plates, ullage openings, and vents, making sure flame screens are installed or the openings are supervised.

(4) Examine all closure mechanisms for cargo tank hatches, ullage openings, sounding ports, tank cleaning openings, and any other openings that maintain the seaworthy condition of the vessel.

f. Pollution prevention equipment check. During annual and renewal COC exams, conduct a thorough check for compliance with the Pollution Prevention Regulations (33 CFR Parts 155, 156, and 159), Tank Vessel Regulations (33 CFR Part 157), and MARPOL Regulations (Annexes I, II, V, and VI). See 33 CFR Part 151 and COMDTINST M16450.30 for further guidance. This should be an in-depth look at the vessel pollution prevention requirements including examination of SBT, CBT, IGS, tank cleaning systems, Crude Oil Washing (COW) system, cargo transfer systems, fuel and lubricating oil systems, waste oil and Noxious Liquid Substances (NLS) handling systems, transfer procedures, garbage handling procedures, declarations of inspection, and marine sanitation devices. The following items should be examined:

(1) On deck.

(a) Look at the cargo small discharge containment and visually check the capacity. Have the crew demonstrate the mechanical means of closing scuppers and drains in the containment and look for the means of draining or removing discharged product from the containment.

(b) Look at the fuel and bulk lubricating oil discharge containment and visually check the capacity (i.e., 1/2 barrel 300-1,600 GT, 1 barrel over 1,600 GT, 5 U.S. gallon portable containers for 100-300 GT and 100 GT or over constructed before July 1974).

(c) Examine the bilge slops piping outlet (1,600 GT and above, on each side of the weather deck; below 1,600 GT, accessible from the weather deck) and make sure the vessel has a means on the weather deck near the discharge outlet to stop each discharge.

(d) Verify that the vessel meets requirements for ballast discharge if it ballasts fuel tanks.

(e) Locate the emergency shutdown system and, if possible, have it activated to ensure proper operation.

(f) Check the vessel's required transfer communications (continuous two-way voice between PICs of the transfer operation) and ensure that they are intrinsically safe.

(g) Visually inspect required deck lighting at the transfer point and transfer operation work area.

(h) Ensure that the maximum and minimum burst pressures for each hose assembly are correct.

[1] The minimum design burst pressure for each hose assembly must be at least four times the sum of the pressure of the relief valve setting (or four times the maximum pump pressure when no relief valve is installed) plus the static head pressure of the transfer system, at the point where the hose is installed.

[2] The Maximum Allowable Working Pressure (MAWP) for each hose assembly must be more than the sum of the pressure of the relief valve setting (or the maximum pump pressure when no relief valve is installed) plus the static head pressure of the transfer system at the point where the hose is installed.

(i) Verify that each hose is marked with the required information.

(j) Note if vessel security is maintained.

(k) Examine the required "Discharge of Plastic and Garbage Prohibited" placard.

(2) Engine room.

(a) Examine the oil-water separator and check the certification label for a Coast Guard approval number or IMO specification label (MARPOL 73/78).

(b) Check the bilge continuous monitor for an approval number or IMO specification label and examine the recording tape.

(c) Check and operationally test the discharge alarm system.

(d) Examine the "Discharge of Oil Prohibited" placard required to be in each machinery space, bilge, and ballast pump control station.

(e) Verify that the vessel is equipped with an operable U.S. Coast Guard or MARPOL IV certified Marine Sanitation Device (MSD).

(f) Check the bilges for presence of oil or hazardous material.

(3) Cargo control area.

(a) Verify that the vessel has a list of designated PICs for each type of transfer operation (fueling and each product).

(b) Examine the transfer procedures in depth. Ensure that--:

[1] They are legibly printed in a language understood by personnel engaged in the transfer operations;

[2] They are permanently posted or available where they can be easily seen and used by crewmembers;

[3] There is a list of each product transferred (generic name, cargo information, applicability of transfer procedures);

[4] There is an accurate description of each transfer system on the vessel (including a line diagram, the location of the shutoff valves, description of and procedures for emptying the discharge containment system);

[5] There is an accurate description of each vapor control system installed on the vessel;

[6] The number of persons required to be on duty for transfer is indicated with the duties, by title, of each person required for each transfer operation;

[7] There are procedures and duty assignments for tending the vessel's moorings during transfer;

[8] There are procedures for operating the emergency shutdown and transfer communications, topping off tanks, ensuring that all valves used during the transfer operation are closed on completion of the operation, and reporting fuel or cargo discharges;

[9] Any exemptions or alternatives granted are located in the front of the transfer procedures; and

[10] Any amendments have been incorporated.

(c) Confirm that the emergency shutdown is operable from the cargo control area.

(d) Confirm that the IGS functions properly, if required.

[1] During all tank vessel exams, PSCOs should confirm cargo tanks are inerted as required for the specific cargo type via any fixed cargo tank oxygen content meters, if available, and verify that the vessel has the required portable detection instrument on board, that it is properly calibrated, and that the crew can properly operate it.

[2] PSCOs should also check the oxygen content of the inert gas on the discharge side of the blowers via the required IGS documentation. PSCOs should only witness the random sampling of cargo tanks if there are no installed fixed content meters or there are clear grounds to believe that the cargo tank atmosphere contains more than 8% oxygen (i.e. a tip from the crew, evidence the ship is not using its IGS, or that the IGS is not working properly).

[3] Prior to witnessing the use of the portable equipment, PSCOs should be familiar with Section 11.8 of the International Safety Guide for Oil Tankers and Terminals. In these instances, PSCOs should assess risk by reviewing the vessel’s procedures for using the portable instrument to test for oxygen content in cargo tanks and confirming that the vessel’s crew

will use those procedures. PSCOs should then witness testing from a safe distance.

(4) General.

(a) Look for potential spark and ignition sources, particularly from electrical equipment;

(b) Determine if the vessel has a capacity to retain all oily waste and oily bilge slops generated while operating in U.S. waters; and

(c) Check to see that no oil or hazardous material is carried in prohibited spaces.

(5) In pumproom.

NOTE: Prior to entry into a pumproom, ensure that the space is certified "Safe for Workers" by a Marine Chemist if the vessel is carrying any Subchapter O products or Subchapter D products that have an established TLV.

(a) Ensure that the ventilation system is properly operating (it should operate a minimum of 15 minutes prior to entry).

(b) Check for potential sources of ignition and fire hazards in or near the pump room, including oil or hazardous material in bilges, excessive vapors, rags, paint, cleaning solvents, unsealed bulkhead penetrations, or openings, etc.

(c) Look for loose wiring and use of drop cords and other electrical sources of ignition (lighting fixtures and electrical appliances should be explosion proof).

(d) Check pumps for leaking oil (other than gland lubrication) or hazardous material.

k. Emergency towing arrangements. SOLAS V/15-1 requires all tankers of 20,000 DWT and above to have an emergency towing arrangement fitted at both ends of the vessel. Verify the design and construction is approved by the flag Administration.

---

7. Expanded Examination

During annual and renewal COC exams or deficiency follow-up exams, the PSCO should expand the exam of a vessel if there are "clear grounds" that the vessel, its equipment, or its crew, do not correspond substantially with the particulars of its certificates. Expanded exams should focus on those areas where "clear grounds" exist and should not include other areas or systems unless the general impressions or observations of the PSCO support such exam.

D. Monitors

1. Procedures for Conducting a Bulk Liquid Monitor

If a bulk liquid transfer is in progress, the PSCO should observe the transfer operation and review procedures, personnel training, and other human factors that influence the transfer operation. Verify the Person in Charge (PIC) is designated in writing and the operation is following the vessel’s transfer procedures as required by 33 CFR 156.120. (See D.1 of this Chapter.)

PSC teams must be careful to avoid possible acute exposure to vapors during cargo operations, especially around vents and ullage openings. Team members should always have an escape route in mind in case of an emergency. At a minimum, the team must do the following:

a. Cargo control area.

(1) Determine the current status of the transfer operation. Ensure that the PIC is at the transfer site or immediately available and has a copy of the vessel's transfer procedures.

(2) Review the vessel's transfer procedures and spot check to see if they meet the requirements of 33 CFR 155.750. For example, see if the PIC is on the PIC list in the transfer procedures.

(3) Ensure that the product being transferred is listed in the transfer procedures product list.

(4) Determine if there is adequate communication between the PICs and others involved with transfer operation and that the means of communications is intrinsically safe.

(5) Ask to see the Declaration of Inspection for the transfer, note if it is completely filled out and signed by both PICs (vessel and facility or both vessels), and look into any items not properly completed or checked off on the Declaration of Inspection.

(6) Check to see if the transfer system is properly aligned to allow the flow of product and that unnecessary portions of the system are secured. Ensure that overboard discharge and sea suction valves are secured (except as required for ballast).

(7) Ensure that transfer limitations within the transfer procedures are not being violated (for example, that if only two tanks are allowed to be loaded at the same time, no more than two tanks are being loaded).

(8) Check to see that all persons required to be on duty for the transfer are at their required locations, awake, coherent, attentive, not under the influence of alcohol or drugs, and familiar with their duties.

b. On deck.

(1) Determine if the transfer hose in use is in good condition (no visible kinks, bulges, gouges, cuts, or other defects).

(2) Verify that a fixed hose connection (bolted, full-threaded, or accepted quick-connect coupling) or automatic back pressure shutoff nozzle is being used.

(3) Ensure that hoses and loading arms are long enough for the vessel to move within the limits of its moorings without causing a strain during the transfer.

(4) Ensure that the required discharge containment is in place. The fixed containment or drip pan should be clean (free of standing water or product) and have a means of draining or removing spilled cargo. It is not necessary to measure the containment unless it is obviously inadequate.

(5) Verify that containment drains and deck scuppers are plugged.

(6) Ensure that flame screens in vents and in ullage holes are of the correct mesh and are not torn or blocked.

(7) Check open cargo hatches and ullage holes for proper supervision.

(8) Verify there are no open flames, exposed wiring, welding, cutting, or other ignition sources.

(9) Ensure that the transfer area lighting is adequate (if required).

(10) Check for availability of protective clothing and respirators when required under 46 CFR Part 153 and 46 CFR Part 154.

E. ADDITIONAL REQUIREMENTS FOR CHEMICAL AND LIQUEFIED GAS TANK VESSELS

Chemical tank vessels are regulated under 46 CFR Part 153 and liquefied gas vessels under 46 CFR Part 154. A foreign chemical or liquefied gas tankship entering U.S. waters must have an IMO Certificate of Fitness (COF) on board. A COF is issued by the vessel’s flag administration or a recognized organization on their behalf. The COF attests to the vessel’s compliance with the IMO Codes. The COF includes a list of cargoes that the flag administration authorizes the vessel to carry. The COC is endorsed to allow carriage of these cargoes in U.S. waters. For chemical tank vessels with an IMO COF issued by a flag state signatory to MARPOL 73/78, the OCMI's signature on the COC constitutes the cargo endorsement required by 46 U.S.C. 3711. For non-MARPOL signatory chemical vessels and all liquefied gas vessels, the cargo endorsement includes the OCMI's signature on the COC and the SOE. The SOE for these vessels will be loaded into MISLE by the MSC and will be issued to a vessel by the OCMI upon satisfactory completion of the COC exam. Questions, comments, and information concerning the SOE should be directed to the MSC.

1. Chemical Tank Vessels with Flag State Signatory to MARPOL 73/78

Application for a COC and cargo endorsement under 46 CFR 153.9(a) is made directly to the cognizant OCMI. A review of the IMO COF by the MSC prior to the OCMI's COC examination is not necessary. The COC will be issued for a period of 2 years and will remain valid as long as the vessel has a valid COF. The expiration date will not be affected by changes in the expiration date or reissuance of the IMO COF.

a. Evidence of compliance. A valid IMO COF issued in accordance with the International Code for the Construction and Equipment of Ships Carrying, Dangerous Chemicals in Bulk (IBC Code) or the Code for the Construction and Equipment of Ships Carrying Dangerous Chemicals in Bulk (BCH Code) (IMO Resolution A.212(VII), as amended) is accepted as evidence that the vessel is in compliance with international standards that approximate Coast Guard regulations. The IBC Code applies to chemical vessels constructed on or after 1 July 1986 and the BCH Code applies to vessels constructed before that date. MARPOL 73/78 Annex II, Regulation 11 makes the IBC Code or the BCH Code mandatory for chemical tank vessels. Because the IMO Codes are mandatory, compliance with either the IBC Code or the BCH Code, as applicable, will satisfy the requirements of 46 CFR 153 with the following exceptions:

(1) 46 CFR 153 Subpart C (Operations) applies to all foreign chemical vessels.

(2) 46 CFR 153.370, 153.371, and 153.438 apply to a foreign tank vessel transporting a cargo with a vapor pressure that exceeds 100 kPa absolute at 37.8° C (See 153.9(a)(2)).

(3) 46 CFR 153.530(b), (d), and (p)(1) apply to a foreign tank vessel transporting alkylene oxides (See 153.9(a)(1)).

b. Cargo endorsement. The signature of the OCMI on the COC is the only endorsement necessary under 46 CFR 153.900 (a)(3). A separate SOE document for MARPOL signatory chemical tank vessels is not required. An IMO COF includes a list of cargoes authorized by the flag State to be carried under the SOLAS Convention. For a chemical cargo to be carried in U.S. waters, cargo carriage must be permitted by U.S. regulations (or tripartite agreement to which the U.S. is a party) and the cargo must be listed on the IMO COF. Separate documentation must be on board a vessel authorizing cargoes being carried under a tripartite agreement.

c. CTVIS. The MSC maintains a document called the CTVIS, which includes much of the general information and guidance that had been included in the previously required SOE document, and serves as a means for the Coast Guard to communicate with foreign chemical tank vessel owners and operators. Although not required, it is highly recommended this document be kept on board a foreign chemical tank vessel for reference and informational purposes. The CTVIS is available on the CG Portal.

2. Liquefied Gas Tank Vessels and Chemical Tank Vessels with Flag States not Signatory to MARPOL 73/78

a. The MSC reviews COC endorsement applications for all foreign liquefied gas tank vessels and those chemical tank vessels whose flag state is not signatory to MARPOL 73/78. Applications for a Certificate of Compliance with SOE should be sent to: MSC (MSC-3), 400 7th Street, SW, Washington DC 20590-0001. The following regulations describe the required information in the endorsement application:

(1) 46 CFR 153.9 (b) Non-signatory chemical tank vessels (new and existing).

(2) 46 CFR 154.22 New liquefied gas tank vessels.

(3) 46 CFR 154.12 Existing liquefied gas tank vessels and barges.

b. Evidence of compliance. As evidence that the vessel is in compliance with international standards approximating Coast Guard regulations, the MSC accepts a valid IMO COF issued in accordance with one of the following:

(1) The Code for the Construction and Equipment of Ships Carrying Dangerous Chemicals in Bulk (BCH or IBC) (IMO Resolution A.212(VII), as amended).

(2) The Code for the Construction and Equipment of Ships Carrying Liquefied Gases in Bulk (IMO Resolution A.328(IX), as amended).

(3) The Code for Existing Ships Carrying Liquefied Gases in Bulk (IMO Resolution A.329(IX));.

(4) The International Code for the Construction and Equipment of Ships Carrying Liquefied Gases in Bulk (IMO Resolution MSC 5(48)).

c. The MSC performs plan review only on those chemical tank vessels whose flag administrations do not issue IMO COFs, on existing liquefied gas vessels constructed before the applicability criteria of 46 CFR Part 154, and on unmanned foreign barges for which no IMO Code presently exists.

d. Preparation of SOE. After accepting the COC endorsement application, the MSC prepares an SOE and loads it into MISLE.

(1) This endorsement identifies the IMO COF and any addendum accepted by the MSC; describes, by reference, the hazardous cargoes authorized for carriage in U.S. waters; and states any special restrictions imposed.

(2) The SOE must be signed and dated by an OCMI when it is issued and must be kept aboard the vessel.

(3) A new SOE is prepared for issuance when the vessel receives a new or amended IMO COF or, in the case of plan review vessels, when the authorized cargo list or special restrictions are changed.

(4) The SOE is valid only when attached to a valid COC and only when the referenced IMO COF is on board.

(5) For a plan review vessel, the MSC notifies the owner when plan review is complete and indicates the cargoes and applicable restrictions which will be included in the SOE.

---

3. Scheduling the Examination for a COC with Cargo Endorsement

After the OCMI (for MARPOL signatory chemical tank vessels) or MSC (all others) accepts a vessel's COC endorsement application, the vessel's owner must request an exam. Procedures differ depending on whether acceptance was based on an IMO COF or plan review.

a. IMO certificated vessels. An owner of a vessel accepted on the basis of an IMO COF (46 CFR 153.9(a) or 154.22) may request an exam by following the procedures in 46 CFR 153.809 or 154.151.

(1) The owner sends notification directly to the OCMI at the vessel's first U.S. port of call at least 7 days prior to the vessel's arrival. This notification should indicate the date of vessel arrival, name of the arrival port or facility, agent's name and telephone number, and the names of any cargoes on board.

(2) The owner must ensure that the vessel plans identified in 46 CFR 153.809(b) or 154.151(b)(3) are available on board the vessel at the time of the examination.

(3) When an examination request is received directly from an owner, the OCMI should ensure that the vessel's application is based on IMO certification rather than plan review.

(4) To ensure that the application is complete and current, the OCMI should review MISLE. The document tab lists the IMO certificates and addenda accepted and the dates of validity, the issue date of the SOE (if one exists) and the issue and expiration dates of the COC, if any.

(5) For a vessel whose application is either incomplete or not current, or for a vessel for which the MISLE information is unavailable, the OCMI should notify the Marine MSC immediately to determine the proper course of action. If review of MISLE indicates that all aspects of the vessel's endorsement application are in order, a place and time for the COC exam should be arranged.

b. Plan review vessels. An owner of a vessel accepted on the basis of Coast Guard plan review (i.e. a chemical tank vessel regulated under 46 CFR 153.9(b) or an existing liquefied gas tank vessel regulated under 46 CFR 154.12, must request an exam by notifying the MSC 14 days prior to the vessel's arrival at a U.S. port.

(1) The MSC notifies the cognizant OCMI of the exam request and forwards an exam package, consisting of the vessel's plans, correspondence file, and completed SOE. Additional information concerning peculiar vessel characteristics, restrictions, or outstanding deficiencies from previous exams may also be included.

(2) The final arrangements for the date and time of the exam are made by the OCMI directly with the vessel's local agent.

---

4. Exam Procedures Applicable to Chemical Tank Vessels issued a Subchapter O Endorsement.

For chemical carriers with an SOE, exams should include the following:

If the Coast Guard accepted the vessel on the basis of plan review, the PSCO should review the SOE, vessel plans, and other information provided by the MSC, paying particular attention to any irregularities noted during plan review. Any questions should be resolved with the MSC before the exam. Particularly at the initial exam of a plan review vessel, the PSCO should verify that the vessel is constructed and equipped in accordance with the accepted plans and applicable regulations. The PSCO should ensure that the vessel is operated in accordance with any special restrictions contained in the SOE.

NOTE: Vessels with IMO certificates may differ slightly from those governed by applicable Coast Guard regulations due to minor differences in interpretation of requirements by the flag administrations. Consult Coast Guard regulations implementing the IMO Codes or the MSC if clarification of the intent of a particular IMO requirement is necessary.

---

5. Exam Procedures Applicable to Liquefied Gas Tank Vessels

During annual and renewal exams of liquefied gas tank vessels, the PSCO should check the following items as applicable:

a. Operation of gas detection equipment and alarms.

b. Temperatures, pressures, and concentration of gas or oxygen in interstitial and hold spaces.

c. Seals and general condition of cargo tank relief valves.

d. Condition of firefighting equipment and systems.

e. Operation of quick-closing valves.

f. Cargo tank high-level alarms.

g. Records of inert gas consumption on loaded voyages, if applicable.

---

6. Updating COC Information

For vessels accepted based on plan review, the vessel owner must notify the MSC whenever name, registry, ownership, or operator changes occur. The MSC will coordinate with the cognizant OCMI to determine the proper course of action. For a vessel accepted on the basis of an IMO COF, a change of registry invalidates the IMO certificate and, therefore, the COC and SOE (if applicable) become invalid as well. For vessels with an SOE, the owner is responsible for submitting copies of amended or updated IMO certificates to the MSC. The MSC will contact the OCMI at the vessel's next port of call so that it can be examined and current conditions noted, as necessary. For vessels not required to have an SOE, the owner should provide the updated IMO COF to the cognizant OCMI. At the discretion of the OCMI, a new COC may be issued or "pen and ink" corrections made to the current COC. If a new COC is issued, the expiration date from the previous COC must be used. The PSCO

must make an entry in the "Remarks" column of the Examination Record to indicate the action taken. If a vessel representative requests an amendment to the content of SOE, the OCMI should contact the MSC.

---

7. Categories of Bulk Liquid Cargoes

a. Cargoes that have been evaluated. Title 46 CFR Parts 153 and 154 include lists of those hazardous liquid cargoes considered to involve unusual potential operating risks to life and property. A foreign vessel must have a properly endorsed COC before it may carry these listed cargoes in U.S. ports. After evaluating a cargo for bulk carriage in self-propelled vessels, Commandant (CG-ENG) places it in one of the following lists if bulk carriage will be permitted:

(1) 46 CFR 30.25-1: List of Flammable and Combustible Bulk Liquid Cargoes (Subchapter D).

(2) 46 CFR 153, Table 1: Bulk Liquid Hazardous Materials (Subchapter O).

(3) 46 CFR 154, Table 4: Bulk Liquefied Gases (Subchapter O).

b. Cargoes that have not been evaluated. In the event that a shipper wishes to transport a cargo not included in one of these lists, Commandant (CG-ENG) must be contacted for authorization (see 46 CFR 153.900(d) and 46 CFR 154.30).

(1) Coast Guard personnel finding a foreign vessel loading, discharging, or carrying cargoes that are not listed in or assigned to the lists referenced above should notify the MSC immediately.

(2) All inquiries regarding the classification of bulk liquid cargoes should be directed to Commandant (CG- ENG).

c. Cargoes too hazardous for bulk carriage. Chemical cargoes that have been determined to be too hazardous to be carried in U.S. waters are the following:

(1) Acrolein.

(2) Chlorine (on self-propelled vessels).

(3) Ethylenimine.

(4) Hydrofluoric Acid.
(5) Hydrogen.

(6) Hydrogen Chloride.

(7) Hydrogen Fluoride.

(8) Methylcyclopentadienyl Manganese Tricarbonyl.

(9) Nitric Acid (in concentrations greater than 70 percent).

(10) Nitrogen Tetroxide.

(11) Oxygen.

(12) Phosphorus Trichloride.

(13) (beta) Propiolactone.

F. UPON COMPLETION OF THE EXAMINATION

Inform the master of all deficiencies noted, what corrective actions are required, and when those actions must be completed. The decision to impose operational controls should be made by the COTP, except in cases of imminent danger. The PSCO should be prepared to make appropriate recommendations to the COTP regarding the actions to be taken on deficiencies. If the deficiencies make the vessel unsafe to proceed to sea or present an unreasonable risk to the environment, the COTP should detain the vessel under the provisions of the appropriate international convention.

Deficiencies that do not make a vessel unsafe to proceed to sea nor present an unreasonable risk to the environment should be handled by requiring corrective measures to be accomplished within a specified time frame or prior to returning to the United States. If time permits, assist in correcting simple problems (such as transfer procedures or maneuvering information) while on scene. Give the master (or mate) sufficient guidance to correct any outstanding problems. Provide the master a written record of the exam that includes a listing of all discrepancies and the corrective actions required.

G. POST-EXAMINATION ACTIONS

When departing the vessel, the PSC team should watch for any signs of pollution around the vessel and the facility (or other vessels) and any other unsafe situations. A brief monitor of the shoreside part of the operation should also be conducted before leaving the area. Complete the

required MISLE data entries as outlined in the applicable Mission Management System procedure. For the benefit of other Coast Guard units, enter case information as soon as possible after return to the unit. In all cases, MISLE should be updated within 48 hours of exam completion. If the vessel is detained, follow the procedures in MSM Volume II, Material Inspection, COMDTINST M16000.7 (series), Section D, Chapter 2.

---

1. Issuance of Certificate of Compliance (COC) with Cargo Endorsement

After completing a satisfactory COC exam, the OCMI issues a COC and SOE if (applicable). The SOE must be referenced in the Examination Record on the COC. If only minor deficiencies exist, the COC may be issued and suitable notation of the deficiencies made in the COC's Examination Record at the discretion of the OCMI. When the COC is issued, the following action must be taken:

a. Enter all data called for on the Certificate of Compliance, Form CG-3585.

b. Enter the expiration date, which should always be 2 years from the date of the COC exam.

NOTE: The COC expiration date entered is not determined by the IMO Certificate expiration date.

c. Under "IMO Certificate," enter "None" or "See Subchapter O Endorsement," as appropriate.

d. Under "Last COC Examination," enter the date and location of the last complete examination. Usually, this will be the same as the date and location of COC issuance.

e. The face of the COC must be endorsed in the space above the signature block to indicate the grades of flammable or combustible cargo for which the vessel is suitable. The endorsement should read: "This vessel is considered safe for the carriage of grade (enter highest grade) and lower cargoes."

f. The OCMI must sign and date the COC.

g. In the "Remarks" section of the COC's Examination Record, enter the results of the examination and, if applicable, refer to the current SOE issued by the MSC, as described in Subparagraph G.8.a(1) below.

h. The expired COC and a copy of the newly issued COC (including the Examination Record) should be scanned into the MISLE activity.

---

2. Non-Issuance of COC

If the examination reveals that a vessel is unqualified for a COC, take the following actions:

a. Enter all required information on the COC except for issue date, expiration date, and validating signature of the issuing officer.

c. Enter the results of the examination on the U.S. Port State Control Inspection Form B, CG-5437B.

d. Instruct the master with to arrange for a reexamination after the deficiencies have been corrected.

e. If the SOE was issued on the basis of an IMO COF, it must be left on board the vessel. If the SOE was issued on the basis of Coast Guard plan review, promptly return it to the MSC with the exam set of plans, unless the master intends to proceed directly to another U.S. port to have the deficiencies cleared. In the latter case, notify the OCMI at the next port and forward the SOE and exam set directly to that OCMI.

f. Enter the deficiencies in MISLE.

---

4. Invalidation of the Subchapter O Endorsement

If a vessel's endorsement for Subchapter O cargo becomes invalid, the vessel is not authorized to carry any of the cargoes listed in 46 CFR 153, Table 1 or 46 CFR 154, Table 4 in U. S. waters. The endorsement may become invalid for any of the following reasons:

a. Expiration of the IMO COF referenced in the SOE.

b. Change of vessel registry.

c. Deficiencies in the cargo containment system or related safety systems that, in the opinion of a Coast Guard marine inspector or boarding officer, render the vessel unsuitable to transport Subchapter O cargo.

d. Expiration of the COC.

---

5. Expiration of IMO COF or Change of Vessel Registry

When a SOE references an IMO COF, the endorsement automatically becomes invalid if the COF expires; if the flag administration revokes, modifies, or reissues the COF; or if the vessel changes registry. Any change or addition to a COF, or issuance of a new COF, must be accepted by the MSC, which will document acceptance by issuing a new or amended SOE. For existing liquefied gas vessels regulated under 46 CFR 154.12 and accepted on the basis of Coast Guard plan review, the MSC may accept a COF for a limited number of cargoes (usually high vapor pressure chemicals, e.g., isoprene, propylene oxide). Therefore, when the COF expires, the SOE becomes invalid for the cargoes accepted based on the COF but remains valid for the cargoes approved during plan review. For example, consider a vessel that the Coast Guard approved for ammonia, propane, and butane during plan review. Later, the vessel receives an Existing Gas Code COF that, in addition to the three liquefied gas cargoes, lists isoprene. Accepting the COF only for isoprene, the MSC places a statement in the SOE: "The vessel's COF is accepted for the carriage of isoprene only." If the COF expires, the vessel's SOE remains valid for ammonia, propane, and butane, but the vessel is not authorized to transport isoprene.

---

6. Action Required When COF is Invalid

If the COF for a vessel arriving at a U.S. port is found to be invalid, the SOE (but not the COC) must be invalidated by making the following entry in the "Remarks" column of the Examination Record of the COC: "Subchapter O Endorsement INVALIDATED this date." In the case of an existing gas vessel that underwent Coast Guard plan review, do not invalidate the SOE, but make an Examination Record entry prohibiting carriage of only those cargoes which were permitted based on the COF. The OCMI/COTP must then--

a. Instruct the master that the vessel is no longer authorized to carry some/all Subchapter O cargo in U.S. ports and explain that new certification must be submitted to the MSC in order to have the authorization reinstated;

b. Notify the MSC and the OCMI/COTP of the next U.S. port of call.

c. Enter a Special Note in MISLE stating the action taken and citing the reason.

---

7. Action Required When Serious Deficiencies are Found

If a vessel is found to have serious deficiencies, it may be judged unsuitable for the carriage of Subchapter O or Subchapter D cargoes, or both, in U.S. ports. If both Subchapter O and Subchapter D cargoes are restricted from carriage, the COC should be invalidated by making

the following entry in the "Remarks" column of the Examination Record: " Letter of Compliance INVALIDATED this date." In other cases, the OCMI may wish to limit only the carriage of Subchapter O cargo by invalidating the SOE or Subchapter D cargo by invalidating the Subchapter D endorsement. In any case, the following actions should be taken:

a. Enter the requirements for correction of the deficiencies in the "Remarks" column or refer to an attached letter.

b. Instruct the master that the vessel is no longer authorized to carry some/all cargoes in U.S. ports and that a reexamination must be arranged. The master must also present the invalid COC and attached deficiency letter(s) to Coast Guard examination teams at subsequent U.S. ports of call.

c. Notify the MSC and the OCMI/COTP of the next port of call..

d. Enter a Special Note in MISLE stating the action taken and listing deficiencies found.

---

8. Examination Record Entries

Entries must be made in the "Examination Record" section of the Certificate of Compliance, Form CG-3535, following the initial examination and each subsequent annual examination; biennial examination; reexamination incidental to repairs or alterations; deficiency follow-up exams; or other exams incidental to the amendment, invalidation or revalidation of the COC or SOE.

a. Nature of entries. Complete the "Type of Examination" block and enter the results of each examination or boarding in the "Remarks" column of the Examination Record.

(1) When deficiencies are found, they must be listed along with corrective actions required or accomplished. Any requirements as to the type of repairs and time permitted for completion must be included.

(2) For each deficiency that remains uncorrected, the OCMI/COTP must specify a period of time in which the deficiency must be corrected (e.g., at next U.S. port of call, within 90 days, at completion of next drydocking, etc.).

(3) If a deficiency list is too extensive to enter on the Examination Record, an entry must be made referring to a separate, attached letter. The master must be instructed to keep the letter available for subsequent Coast Guard exams. If the Examination Record section of the COC is filled, a second copy of the COC must

be attached to the original COC and its Examination Record section used for subsequent entries.

b. Sample entries The following are examples of some typical entries made in the "Remarks" section of the Examination Record:

(1) "Vessel examined for issuance of COC - no deficiencies, COC issued based on Subchapter O Endorsement issued by the Marine Safety Center and dated (enter date of Subchapter O Endorsement)."

(2) "Vessel examined for issuance of COC, vessel found unsuitable for carriage of Subchapter O cargo, vessel may carry only Grade D and E combustible cargo until deficiencies in Sector Delaware Bay letter dated 12 November 2011 are corrected."

(3) "Certificate of Compliance INVALIDATED due to vessel deficiencies - see Sector Baltimore's letter dated 16 July 2011."

(4) "Routine safety exam - incompatible cargoes stowed in adjacent tanks, corrected."

(5) "Vessel examined in accordance with 33 CFR 155, 156, and 164; 46 CFR 35; and SOLAS 74 - no deficiencies."

(6) "Certificate of Compliance REVALIDATED this date - deficiencies noted in MSU Morgan City's letter of 21 April 2011 satisfactorily corrected."

c. Content of reports. Reports of examinations resulting in the issue of a COC should include the following:

(1) Issue and expiration dates of the COC.

(2) A photocopy of the newly issued COC including the Examination Record.

(3) Deficiencies found (indicate none, or send the list appearing on the Examination Record or a referenced deficiency letter).

(4) The expired COC and SOE.

c. The OCMI should return any examination plan review set provided by the Marine Safety Center.

H. GUIDANCE ON APPLICATION PROCEDURES AND THE LIMITED AUTHORITY TO CONDUCT OVERSEAS CERTIFICATE OF COMPLIANCE (COC) EXAMINATIONS

There has been an increase in the number of foreign flag tank vessels lightering cargo inside the U.S. Exclusive Economic Zone (EEZ) without coming close enough to a U.S. port for easy access. Most of this lightering is conducted more than 60 miles from the nearest shore, which requires the Coast Guard team to be flown out by helicopter in order to conduct the Certificate of Compliance (COC) exams. This procedure exposes Coast Guard personnel to substantial risk and forces the vessel owner to pay for expensive helicopter charters.

---

1. Goal to Minimize Risk to Coast Guard Personnel and Facilitate Commerce

This policy will minimize the risk to Coast Guard personnel while assisting vessel owner/operators by facilitating the required regulatory examinations of vessels identified in this guidance. Foreign flag tank vessel owners/operators whose vessels are engaged in offshore lightering may apply to the cognizant overseas Coast Guard OCMI (e.g., Far East Activities or Activities Europe) to have their COC conducted at an overseas port. The overseas OCMI may either approve or deny the application based on the following:

a. Completeness of the application;

b. Whether the applicant satisfied all the requirements for consideration, as set forth in this document;

c. The applicant remitting the applicable user fees as required by 46 CFR Part 2, and a written agreement from the owner/operator to pay all reimbursable expenses; and

d. Availability of unit resources.

---

2. Vessel Eligibility

Vessels eligible for consideration are those--

a. Vessels whose current COC expires before the initiation of their next cargo transfer in U.S. waters;

b. Vessels that will be on their first voyage to the United States; or

c. Vessels that have recently come under either new ownership or re-flagging and need an initial COC; and

d. Vessels that are under current charter agreement that specifically indicates that the vessel will conduct lightering operations at a distance offshore that necessitates the use of charters to transport Coast Guard personnel to and from the vessel, or have a record of trading in this pattern.

---

3. Vessels Must Be Trading to the United States

Foreign vessel exams must not be conducted overseas based on the mere potential that a vessel may trade in the United States at some unspecified time in the future. Such exams must only be conducted for the purpose of issuance of the applicable COC.

---

4. Manner of Conducting Examinations

Overseas COC exams will be handled in the following manner regarding the Coast Guard PSC Targeting Matrix:

a. The overseas COC will count towards the PSC Exam Matrix exam frequency history.

b. Priority I and Priority II vessels may apply for an overseas COC, however, the vessel owner/operator is to be informed that the vessel may also be examined prior to being allowed to conduct cargo operations in the U.S. The overseas OCMI is encouraged to consult with the intended lightering port's OCMI to coordinate the most effective and efficient action to take relative to these vessels.

NOTE: Vessels that are categorized as Priority II vessels solely due to the fact that their COC has expired will, by merit of having received a valid COC from the overseas OCMI, no longer be a Priority II vessel upon arrival in the U.S. EEZ.

c. Priority III and IV vessel may apply without restriction.

---

5. Notification of CONUS OCMI of Damages

Nothing in this instruction relieves the vessel of the requirement to notify the cognizant OCMI of any damages/casualties experienced during a voyage to the United States prior to arrival. It also does not preclude the CONUS OCMI's authority and responsibility to board vessels that experience damage between the time the COC is issued and the vessel's U.S. arrival, nor does it prevent the CONUS OCMI from conducting exams outside the scope of this policy.

---

6. Controlling Regulations

Vessel exams for accepted applications will be conducted in accordance with reference (a), the applicable portions of Titles 33 and 46 CFR, controlling international treaties and conventions, and official Coast Guard policy, with the following modifications:

a. Exceptions. Certain vessel requirements do not apply to vessels during either lightering or discharge-only operations.

(1) For those requirements that are not required due to the discharge/lightering-only occupation of these "special case" vessels, an endorsement on the COC document must be made identifying the special restrictions.

(2) The conditions of the restriction are to be noted in a special note in MISLE.

(3) For example, overfill device requirements are only applicable to vessels loading cargo. Vessels without installed overfill devices will have their COC endorsed with the statement that the vessel is not in compliance with 33 CFR 155.480 and is restricted to only conducting lightering discharge operations while in the U.S. EEZ. Should the vessel enter a U.S. port to load cargo at some future date, the overfill devices must be properly installed and a new COC issued after satisfactory examination by the cognizant OCMI.

b. Deficiencies. Deficiencies issued during the examination will be in accordance with MSM Volume II, Material Inspections, COMDTINST M16000.7 (series), Section D, Chapter 2.

(1) Priority 1 deficiencies would preclude the issuance of a COC.

(2) Priority 2 deficiencies would include deficiencies that would have to be cleared before conducting cargo operations or deficiencies that may be cleared by written statement from the vessel master in accordance with OCMI direction.

(3) For vessels examined under this policy, it may be in the best interest of all parties— Coast Guard and vessel owner or operator—to clear only Priority II requirements requiring a Coast Guard exam before departing for the United States.

(4) Vessels whose deficiencies are categorized as Priority 1 (i.e., preclude transfer in the U.S. EEZ) must clear these deficiencies before a COC will be issued.

(5) Vessels whose deficiencies are categorized as Priority 2 may clear these deficiencies through a suitable arrangement specified by the OCMI.

7. MISLE

MISLE must to be updated upon conclusion of the COC exam, including Inspection Notes and all special restrictions.

---

8. User's Fees and Reimbursable Expenses

The appropriate fees incurred by this inspection are the following:

a. 46 CFR 2.10-120; Overseas Inspection Fee.

b. 46 CFR 2.10-125; COC Fee.

c. Reimbursable travel expenses.

CHAPTER 7: PROCEDURES APPLICABLE TO FOREIGN PASSENGER VESSELS

A. INTRODUCTION

MSM Volume II, Material Inspection, COMDTINST M16000.7 (series), Chapter D1, contains information on the general aspects of the Coast Guard's Port State Control (PSC) program. Inspection of foreign flag passenger vessels began due to congressional interest in the implementation of the 1966 Fire Safety Amendments to the International Convention for the Safety of Life at Sea (SOLAS 60). On November 2, 1968, Public Law 89-777 (R.S. 4400(c); 46 U.S.C. 362(c)), Fire Safety Standards for Foreign and Domestic Passenger Vessels came into effect and required the U.S. Coast Guard to verify that foreign passenger vessels complied with the 1966 Fire Safety Amendments.

On August 26, 1983, Public Law 98-89 (97 Stat. 520; 46 USC 3505) provided the additional authority for the Coast Guard to verify that foreign flag passenger vessels that embark passengers in U.S. ports comply with SOLAS Convention requirements. Public Law 98-89 (97 Stat. 512; 46 U.S.C. 3303) also provides reciprocity to foreign vessels of countries party to SOLAS.

In August 2004, Congress revised 46 U.S.C. 3505 to extend its applicability to "a foreign vessel carrying a citizen of the United States as a passenger." This law permits the Secretary to prevent a passenger vessel carrying U.S. citizen passengers from departing a U.S. port, even if passengers did not embark the vessel at the port, if the Secretary finds that the vessel does not comply with SOLAS standards.

In 2010, Congress passed the Cruise Vessel Security and Safety Act (CVSSA) aimed at promoting the safety and security of cruise vessel industry passengers and crew on all passenger vessels that are authorized to carry at least 250 passengers; have onboard sleeping facilities for each passenger; are on voyages that embark or disembark passengers in the Unites States; and are not engaged on a coastwise voyage. It implemented various measures including updates to ship design; providing public access to information regarding crimes aboard cruise ships; improved precautions, response, medical care and support for victims of sexual assault; and preservation of evidence necessary to prosecute criminals. Two new sections to Title 46, U.S.C. Chapter 35 including 3507 and 3508 were added. Title 46 U.S.C. 3507 provided structural, informational, and operational requirements that promoted the security and safety of passengers and crew on cruise vessels. 46 U.S.C 3508 provided training and crew certification requirements related to crime scene preservation training.

B. APPLICABLE PROCEDURES

A foreign passenger vessel will fit within one of the three categories described below. The OCMI shall determine the appropriate category when such a vessel makes notification of intent to enter the United States for the first time. The specific category will determine the appropriate OCMI response and dictate the need for plan review and approval, boarding, examination, inspection and/or issuance of appropriate Coast Guard certificates. These guidelines are nearly identical for both passenger vessels (100 GT and over) and small passenger vessels (under 100 GT). The categories are as follows:

a. Vessels registered with an administration signatory to SOLAS 74/78 and in possession of valid Passenger Ship Safety and Exemption Certificates.

b. Vessels registered with an administration signatory to SOLAS 74/78, but not holding valid Passenger Ship Safety or Exemption Certificates.

c. Vessels registered with an administration not signatory to SOLAS 74/78.

---

1. Passenger Vessels Registered with an Administration Signatory to SOLAS 74/78 and in Possession of valid Passenger Ship Safety and Exemption Certificates

a. When both the Passenger Ship Safety and Exemption Certificates refer only to SOLAS requirements, an examination must be conducted in sufficient depth and scope to assure that SOLAS 74/78 is being met, keeping in mind the International Maritime Organization's (IMO) Guidelines on Procedures for Port State Control (Resolution A.787(19)). Additional information regarding these exams can be found in C of this Chapter.

b. Commandant (CG-CVC-2) must be consulted in cases when the OCMI believes that exemptions issued by the flag administration render the vessel unacceptable for service from a U.S. port.

c. When the Passenger Ship Safety and/or Exemption Certificates claim adherence to U.S. Coast Guard regulations, in whole or in part, a more detailed examination must be conducted to assure compliance with the referenced Coast Guard regulations.

(1) Panama has referenced Subchapter T on some of its vessels that were former U.S. flag "T-boats" now operating locally on cruises to nowhere.

(2) In general, this exam should proceed on the same scale as if the vessel were U.S. flag, including the specific requirements described above, as they apply to the vessel in question on the specific route or area of operation.

(3) A Cargo, Miscellaneous and Passenger Vessel Hull Inspection Book (CG-840A),

Machinery Inspection Book (CG-840B) or Small Passenger Vessel Inspection Book (CG-840T), as applicable, should be used as a guide for completing this examination.

d. The United States has filed an equivalency statement with the IMO, applicable to certain U.S. flag small passenger vessels on international voyages, for structural fire protection and lifesaving equipment. It has been reported that some administrations may apply this equivalency to their vessels, whereupon it will be listed on their Exemption Certificates. These arrangements are acceptable, subject to the results of the examination and verification that the vessel in question meets the criteria established in the equivalency statement, which is the following:

(1) The vessel must operate not more than 20 miles from land.

(2) The vessel must be under 100 GT.

(3) The vessel must have overnight accommodations for less than 50 passengers, less than 150 passengers.

(4) The vessel must be equipped with inflatable liferafts (or inflatable buoyant apparatus, in warmer waters) for 100 percent of the persons on board.

(5) The vessel must be certificated for an ocean route.

(6) If the vessel in question does not meet these criteria, it must meet SOLAS 74/78 or the requirements in 46 Code of Federal Regulations (CFR) Subchapter T, just as a U.S. vessel of similar design and service would be required to meet.

(7) In applying U.S. regulations, the vessel's date of build is immaterial because the regulations in effect on the date of application will apply.

---

2. Foreign Passenger Vessels Registered with an Administration Signatory to SOLAS 74/78, but Not Holding Valid Passenger Ship Safety or Exemption Certificates.

a. If a foreign passenger vessel that is registered with an administration signatory to SOLAS 74/78 enters the United States without valid Passenger Ship Safety or Exemption Certificates, intervention under SOLAS 74/78 Chapter I, Regulation 19, is appropriate.

b. Alternatively, compliance with Subchapter H, K or T, as appropriate, including issuance of a Certificate of Inspection in the same manner as for a domestic vessel, would be acceptable. It is at the OCMI's discretion to determine which solution is better. Note that failure to examine the external underwater body of the vessel, as required by SOLAS 74/78, Regulation 7(b)(ii), invalidates SOLAS certificates.

---

3. Passenger Vessels Registered With an Administration Not Signatory to SOLAS

a. Passenger vessels of foreign nations not party to SOLAS, or to which the Convention does not apply, that embark passengers from any U.S. port must meet 46 CFR Subchapter C, H, K, or T, as appropriate.

b. A Certificate of Inspection should be issued if a vessel subject to 46 CFR Subchapter H, K or T meets the requirements. The scope and detail of the inspection must be the same as for a U.S. vessel.

---

4. Foreign Passenger Vessels Operating on “Cruises to Nowhere”

Foreign passenger vessels operated on a day-service or "cruise to nowhere" basis are not on an international voyage, regardless of tonnage. Therefore, it has been argued that SOLAS 74/78 would not apply. However, due to concern for passenger safety, OCMIs must apply the above categories to determine the appropriate inspection or examination regimen for these vessels.

---

5. Foreign Passenger Vessels Call at U.S. Ports Which Do Not Embark Passengers and Do Not Carry U.S. Citizens as Passengers.

COTPs/OCMIs shall not require an Initial Certificate of Compliance (COC) Exam or issue a COC for foreign passenger vessels calling at U.S. ports which do not embark passengers and do not carry U.S. citizens as passengers. COTPs/OCMIs should target and examine such vessels following standard Port State Control program guidelines including, as necessary, a security boarding and/or a Maritime Transportation Security Administration/International Ship Port Security Code (MTSA/ISPS) compliance exam to verify compliance with U.S. laws and international treaties in accordance with current policies.

---

6. Navigation Safety Equipment Testing

Many cruise vessels operating from U.S. ports have itineraries that include transit times of 24 hours or less between port calls. The requirements of 33 CFR 164.25 and SOLAS Chapter V/ 26 may result in an excessive testing frequency of emergency equipment on voyages of short duration. This testing may also cause greater harm than any benefits gained. For example, starting the emergency generator and testing storage batteries several times every week may decrease their readiness. Instead, it may work to their detriment, in that the probability of failure in an actual emergency may increase due to repeated stops and starts of the equipment and increased opportunity for human or organizational errors.

In light of this, the Coast Guard considered a national waiver for the testing of emergency equipment as required by 33 CFR 164.25. While it appeared such a waiver would be appropriate, a careful regulatory review determined the authority to allow deviations from these testing procedures rests solely with the Coast Guard Captain of the Port (COTP). Specifically, the COTP may, upon written applications, determine that the deviations does not impair safe navigation under anticipated conditions and routes within the COTP zone and will not result in a violation of the rules for preventing collisions at sea.

a. To ensure consistent enforcement of this regulation and provide guidance to field personnel and industry alike, the following guidelines are provided to COTPs. Upon receipt of a written application from a vessel owner, each COTP should take the following into account when deciding on a waiver:

   (1) Does the vessel's itinerary involve multiple port calls?

   (2) Do the risk factors present in the AOR such as weather, traffic and navigational complexities preclude issuing a waiver?

   (3) What are the implications of the human element in terms of excessive testing?

   (4) Is there an increased likelihood of damage to emergency equipment due to repeated starts and stops of operation under low load conditions?

   (5) Vessel operating history for steering gear, emergency source of power and propulsion systems; is any new or novel technology utilized that has not been in existence long enough to establish a satisfactory performance history.

   (6) Does the vessel have an existing waiver from their administration relaxing the testing of requirements in SOLAS Chapter V/19.

b. Nothing in the above guidance should be construed as limiting or usurping the authority of the local COTP. In order to facilitate consistency nationwide, CG-CVC-2 recommends Area and District Commanders support COTPs who consider modifying the testing intervals required in 33 CFR 164.25 in the follow manner:
   (1) Primary and secondary steering gear tested in accordance with 33 CFR

164.25(a)(1)(iv)and (vii) prior to departure and in the vicinity of the sea buoy prior to entering port; all other requirements in 33 CFR 164.25(a)(1) completed weekly during the test as outlined in 2-5 of this paragraph.

(2) Internal vessel control communications and vessel control alarms tested weekly

(3) Standby or emergency generator auto start feature tested weekly. The vessel must demonstrate that it has procedures in effect for testing the steering gear while using the alternative power supply (i.e. the feeder cable to the steering gear fed by the emergency switchboard). Note: Ships may test the alternative power supply and steering gear while testing the emergency generator under load; however, failure to conduct the test that way is not a deficiency.

(4) Storage batteries for emergency lighting tested weekly.

(5) Main propulsion machinery ahead and astern prior to departure and in the vicinity of the sea buoy.

---

7. Coordination with the Center for Disease Control and Prevention (CDC)

There may be situations that arise where coordination with the CDC is necessary to assist against the introduction, transmission and spread of quarantinable and serious communicable diseases in the United States. In such instances, local COTPs/OCMIs should follow the procedures outlined in the Memorandum of Understanding between the Department of Health and Human Services and the Department of Homeland Security.

C. EXAMINATIONS

There are three different types of foreign passenger vessel examinations: the initial examination, annual examination, and periodic examination. Each foreign passenger vessel embarking passengers from U.S. ports or carrying U.S. citizen passengers between ports must be examined at its first port of call in the United States and at least annually thereafter. In addition to these annual exams, foreign passenger vessels must be reexamined periodically based on compliance history. If a vessel operates on routes to several U.S. ports and under the jurisdiction of more than one OCMI, initial, annual, and periodic exams are not required by each office. Coordination between offices is encouraged. The importance and scope of these examinations are described below, primarily from a fire safety and lifesaving point of view. This is not to downplay the importance of examining the entire vessel for compliance with all SOLAS, statutory, and regulatory requirements, but rather to emphasize the extreme importance of fire safety and lifesaving for passenger vessels.

---

1. Initial Certificate of Compliance (COC) Examination

Foreign flag passenger vessels arriving in the United States that embark passengers for the first time or make an initial U.S. port call while carrying U.S. citizens as passengers, must participate in the Initial COC Exam process. Vessels that have returned to service after a prolonged absence from the United States must also participate in the Initial COC Exam process.

a. Applicability. Plan review and inspection during the Initial COC Exam process is required for certain foreign passenger vessels in order to meet the obligations specified in Title 46, U.S.C. Section 3505 and SOLAS, Chapter I, Regulation 19. Initial COC Exam-related plan review and inspection must be performed for the following vessels:

(1) New or existing vessels that intend to embark passengers for the first time from a U.S. port.

(2) New or existing vessels that intend to carry U.S. citizens as passengers and make port calls at U.S. ports for the first time.

(3) Existing vessels that have undergone a modification or alteration of a “major character” as defined by SOLAS 74.

(4) Existing vessels that have undergone a modification or alteration, or a change of use or categorization of existing spaces that affects required structural fire protection or means of egress. In such cases, the Coast Guard will limit Initial COC Exam plan review and related examination to the new arrangements and will examine existing arrangements as described in Paragraph 2, Annual Foreign Passenger Vessel Examination.

(5) Existing vessels that return to service in the United States more than one year after the annual Certificate of Compliance, Form CG-3585 expired and more than 5 years since the Coast Guard Marine Safety Center (MSC) completed the vessel plan review. The vessel owner or operator of such a vessel must make a complete submission of all modifications or alterations made to the vessel since the initial Coast Guard plan review. The Coast Guard will require Initial COC Exam plan review and inspection for any modification or alteration made to the vessel that materially alters structural fire protection or means of egress and will examine existing arrangements as described in Paragraph 2, Annual Foreign Passenger Vessel Examination.

(6) Existing vessels selected by Commandant (CG-CVC).

b. Initial COC Exam process steps. The Initial COC Exam process consists of the following steps, listed in the order that they should occur:

(1) Concept review, when necessary, for vessels in the design phase. Concept review is a required step during the early design phase of a new vessel and is necessary for discussion of interpretative issues, any new design or arrangement not previously seen on any other vessel, or incorporation of alternative design arrangements as allowed by SOLAS Chapter II-2, Regulation 17 (Part F, 2000 Amendments). The MSC performs a concept review for specific arrangements when requested by the submitter or owner.

(2) Plan review for flag-approved plans representing the ship as it is to be constructed (for new ships) or the final "as built" condition (for existing ships). The MSC performs all plan review as part of the Initial COC Exam process.

(3) Structural Fire Protection (SFP) examination. The SFP examination is an inspection of the structural fire protection arrangements and details for compliance with SOLAS requirements and the vessel's approved structural fire protection plan. The examination also concentrates on the workmanship of SFP installation.

(4) Preparation for the Initial COC Exam.

(5) The COC Exam.

c. Concept Review. The Coast Guard conducts a concept review for novel ship arrangements or unique designs incorporating design features that involve interpretations of SOLAS rendered by the vessel's classification society or Flag Administration, equivalencies, or exemptions from existing regulations. Unique designs include alternative designs and arrangements addressed by SOLAS Regulation II-2/17. The MSC provides this review to address specific design concepts or ideas that could create delays if discovered later during the normal course of plan review. Concept review does not result in approval of the conceptual drawings, but results in acceptance of specific conceptual details. The submitter may then integrate these conceptual details into final design drawings and submit these as part of the plan review process. The MSC encourages submitters to request concept review as early as possible during the vessel design process. Early review of such conceptual details facilitates follow-on plan review and vessel examination.

(1) For additional information concerning submittals, correspondence, and meetings, related to concept review, contact the MSC, Attention: Major Vessel Branch Chief.

(2) The submitter may request a meeting with MSC to present, clarify, and discuss conceptual details. MSC requires at least a thirty day notice before the proposed meeting date and the request must include an agenda for the meeting. Additionally, the submitter should provide the MSC with arrangement plans and documentation to support the meeting agenda.

*Note: MSC does not perform tabletop plan review or make decisions relating to conceptual issues during concept review meetings. The submitter may prepare meeting minutes and forward a copy of the meeting minutes to the MSC for review. The MSC will review these meeting minutes and provide timely commentary to the submitter, in writing.

(3) For alternative designs and arrangements addressed by SOLAS Regulation II-2/17, the USCG is an interested party. Because of the increased engineering rigor associated with alternate design and arrangements, the submitter must include the MSC in all communications related to alternate design and arrangements as provided in Section 1.4 of the Annex to the International Maritime Organization (IMO) Maritime Safety Committee Circular 1002.

d. Plan Review. The submitter should submit at least three sets of final drawings and documentation bearing the approval stamp of the flag Administration or Recognized Organization (RO) to the MSC for review. Submit plans for each vessel in a vessel class. The submitter should make these submissions as early as possible (at least 6 months in advance), to allow MSC to complete plan review before the SFP and Initial Exam. All plans must:

(1) All plans must:

(a) Reflect the "as-built" condition of the vessel.

(b) Clearly indicate areas of the vessel that the submitter modified or altered during design.

(c) Clearly indicate the SOLAS convention and amendments applicable to each area.

(d) Be legible, contain a legend or key written in the English language, and contain a scale to allow reviewers to determine dimensions.

(e) Include supporting information (either on the plan or on separate documentation) for any special considerations approved by the flag Administration such as equivalencies or exemptions.

(2) The submitter should submit the following information and plans for review by the MSC:

(a) General Information:

[1] Name of vessel (including former name(s) for existing vessels);

[2] IMO Number;

[3] Building contract date, keel laying date, deliver date;

[4] Country of registry;

[5] Classification Society;

[6] Total number of passengers and crew;

[7] Gross tonnage, length, breadth, depth, and speed;

[8] First U.S. port where passengers are expected to be embarked and the approximate date;

[9] SOLAS Convention to which the vessel was built, including amendments; and

[10] Major modification information to include dates, locations, and SOLAS Convention to which the vessel was modified.

(b) Structural fire protection plans of bulkheads and decks. These include:

[1] Legend detailing bulkhead and deck construction, including insulation values. Symbols should be distinguishable and in accordance with IMO Resolution A.654(16) for ships constructed before 1 January 2004. For ships constructed on or after 1 January 2004, the symbols should be in accordance with IMO Res. A.952(23) or ISO 17631:2002.

[2] Identification of each space by name and numerical fire risk category per SOLAS Regulation II-2/26 or II-2/9 (2000 Amendments), as applicable. For spaces having multiple uses and fire risk classifications, or when the fire risk classification for a space is in doubt, the submitter shall provide explanations regarding the use of the space, expected fire load in the space, and whether hazardous materials are stored in the space, to expedite review.

[3] Location of all main vertical zone boundaries, fire screen doors, and draft stops (the submitter may show this by providing the fire control plan required by SOLAS II-2/15.2.4).

(c) Fire barrier penetration schedule that details approved methods for penetrating bulkheads and decks with piping, cables, ventilation ducts, etc. Include any Heating, Ventilation, Air Conditioning (HVAC) plans showing fire boundary penetration details and damper details.

(d) Means of escape diagram should indicate primary and secondary exits from each area, maximum occupancy of public spaces (occupant load), escape routes, and assembly stations. In addition, include means of escape calculations in accordance with Chapter 13 of the International Code for Fire Safety Systems.

(e) Preliminary stability calculations if requested by MSC. Submit these calculations early in the design stage as this will assist with design planning. MSC will conduct a cursory oversight review of assumptions accepted by the Administration. In particular, MSC will review documentation associated with cross-flooding, down-flooding, and any equalization measures accepted by the Administration.

(f) In cases where watertight doors are permitted by the Administration to remain open during navigation, the Administration’s analysis or report documenting both the need for the watertight door to remain open and impact of the open door on the ship’s operations and survivability. SOLAS Regulation II-1/15.9.3 permits “certain watertight doors to remain open during navigation if considered absolutely necessary; that is, being open is essential to the safe and effective operation of the ship's machinery or to permit passengers normally unrestricted access throughout the passenger area.” This regulation further states "Such determination shall be made by the Administration only after careful consideration of the impact on ship operations and survivability." If permitted to remain open, watertight doors shall be ready at all times for immediate closure. MSC will conduct a cursory review of any Administration documentation associated with watertight doors that they permit to remain open during navigation.

(g) MES installation drawings and supporting documentation showing that the MES remains operational in its designed manner under unfavorable conditions of trim and list. Unfavorable conditions of trim and list are a trim of up to 10° and list of up to 20° either way. Alternatively, the submitter may provide documentation demonstrating the MES remains operable in the worst case list and trim conditions, taking into account sinkage.

(h) Vessel owners planning to change vessel registry to the US flag should note the level of detail required of the plan review for a U.S. flag vessel is substantially greater than that required for an Initial COC Examination. Owners should refer to current USCG guidance for reflagging vessels, specifically NVIC 10-81.

(3) After satisfactory review, the MSC stamps and dates acceptable plans as "Reviewed" and provides a plan review letter to the submitter. For additional information on plan submittal, visit the MSC website at http://homeport.uscg.mil and select Marine Safety Center from the Featured Homeport Links column.

e. SFP examination. The SFP examination should normally be conducted during construction or a lay-up period in order to examine structural fire protection not readily accessible on an operating vessel. For vessels under construction or undergoing extensive modifications, the SFP should occur after plan review, but several months before the Initial COC Exam. For vessels already in operation, the SFP examination may be conducted during the Initial COC Exam.

(1) The best time to perform the SFP examination is when one-half of a vessel's SFP is complete (and approved by the Administration or Recognized Organization (RO)) with the remaining SFP at an intermediate stage of construction. The MSC can provide a list of recommended inspection points.

(2) PSCOs[1] may vary the scope of the SFP examination as necessary to evaluate the yard and RO control procedures in place to ensure that the construction complies with the flag approved plans. In areas where visual inspection is limited (primarily on existing vessels), PSCOs may require removal of certain joiner panels exposing structural fire protection installations for examination. Typically, a SFP examination will take 2 days and involve a team comprised of two PSCOs representing the local OCMI and the MSC. Larger passenger vessels may require additional PSCOs. Representatives from the Administration or RO with structural fire protection expertise should also attend the SFP examination.

(3) In general, SFP examinations include the following:

(a) Fire insulation. PSCOs should spot check workmanship, thickness, heat bridges, cable, pipe and duct penetrations, windows, and fire doors throughout the vessel. Particular attention should be paid to the following areas:

[1] Main vertical zone boundaries.
[2] Muster stations and category four escape routes (sprinkler placement for

[1] For the purposes of an SFP and/or Intial COC Examination, PSCOs may include a Foreign Passenger Vessel Examiner, a qualified inspector from an overseas Activity, or an engineer from the Marine Safety Center.

glass protection).

[3] Escape stairs.

[4] Vessel side-shell adjacent to lifeboat and liferaft deployment routes.

[5] Galleys, laundry, pantries, and control stations.

[6] Lifts and trunks.

[7] Main machinery space and casing.

[8] Corridors in cabin areas/continuous ceilings.

[9] Fire dampers.

(4) Enclosed escape stairways. The PSCOs should examine the route of escape, structural fire protection installation, and bulkhead penetrations. Examiners should also inspect stairway ventilation per SOLAS II-2/32.5 or II-2/9.7.4 (2000 Amendments) and verify that stairway doors do not open to unauthorized spaces.

(5) Escape routes. PSCOs should look for the presence of dead-end corridors and verify two means of escape where required. PSCOs should also examine the effectiveness of low-level lighting or photo-luminescent strip indicators provided along escape routes if fitted at the time of SFP examination.

(6) Fire boundary penetrations. PSCOs should examine main vertical zone and escape stairway penetrations and verify that "A" Class divisions are maintained at penetrations for electrical cables, pipes, trunks, ducts, etc., and that corridor bulkheads extend from deck to deck unless they meet the exemptions stated in SOLAS Regulation II-2/25.2 or II-2/9.2.2.2.2 (2000 Amendments), as applicable. PSCOs should also require removal of overhead and bulkhead panels to spot check division penetrations.

(7) Fire and smoke damper and ventilation arrangements. PSCOs should examine ventilation system fire and smoke dampers for controls and proper operation. Additionally, they should examine construction of ventilation ducting and bulkhead penetrations and filters, especially in the laundries. PSCOs should direct the removal of overhead panels, especially at main vertical zone bulkhead intersections, to facilitate the examination.

(8) Draft stops. PSCOs should examine horizontal and vertical draft stops for workmanship and location (at not more than 14 meter intervals, both longitudinally and athwartships). PSCOs should direct the removal of overhead and bulkhead panels to facilitate the examination. Locations usually examined include stateroom corridors, lounges, and areas in way of the side shell.

(9) Space categorization. PSCOs should verify space categorization shown on the SFP drawings (for example, whether small lockers located within cabin corridors are appropriately categorized (Category 7 or 13), and are separated via rated boundaries and fitted with detectors and sprinklers; that Category 10 spaces are not fitted with storage/shelving, desks, tables, etc.).

(10) Smoke detector and sprinkler arrangements. The inspectors should examine smoke detector and sprinkler spacing in accordance with SOLAS Chapter II-2. This examination should include a check of the ship's compliance with SOLAS Regulation II-2/9.4.1.3.3 in way of lifeboat and liferaft deployment routes.

(11) PSCOs should require the shipyard or owner's representative to provide the following items upon arrival:

(a) Approved copies of each of the following plans, for Coast Guard use onboard the vessel (or drawings showing the same details as the drawings submitted for approval):

[1] SFP plan.

[2] SFP details showing insulation thickness.

[3] SFP details for cable, ventilation, and other penetrations.

[4] Ventilation plans to verify location/routing of ducting in way of A-class boundaries.

(b) Type approval certificates for all the following items:

[1] Fire rated doors for each model installed.

[2] Fire rated windows for each model installed.

[3] Low flame spread, toxicity, and smoke materials installed throughout the vessel.

[4] Non-combustible materials, including fire insulation, installed throughout the vessel.

(c) Manufacturer's manuals, including details regarding the components and installation procedures for--

[1] Automatic sprinkler system; and

[2] Smoke and heat detection system.

f. Preparing for the Initial COC Exam. An Initial COC Exam should not begin until the Administration (or RO acting on behalf of the Administration) issues the SOLAS Passenger Ship Safety Certificate (PSSC). OCMIs may relax this requirement when the flag Administration expects to issue the PSSC at the end of the examination. The designer or owner's representative should provide original certificates demonstrating compliance with all applicable international treaties for examination by the Coast Guard. Additionally, the Initial COC Exam occurs only after the Coast Guard has completed plan review and the MSC provides appropriate comments and stamped plans to the local OCMI.

(1) Exam Location. Initial COC Exams are often initiated overseas for both new and existing ships, and are completed upon the ship's arrival into the U.S. However, there are occasions when the entire Initial COC Exam is conducted in the U.S. The scope of the exam is the same in both cases, but the processes and timing are somewhat different.

(a) Initial COC Exams conducted entirely in the U.S.

[1] Vessel operators must contact the OCMI of the U.S. port where passengers will be first embarked at least 45 days in advance to schedule the examination.

[2] Vessel operators should anticipate the Initial COC Exam lasting four to six days depending on the size of the vessel and the complexity of systems on board. The Coast Guard exam team should be made up of four to six PSCOs from the local OCMI, the Cruise Ship National Center of Expertise, and the MSC. The SFP Exam will typically be carried out coincident with the Initial COC Exam, so vessel operators should coordinate the removal of bulkhead or ceiling panels with the Coast Guard exam team.

(b) Initial COC Exams initiated overseas.

[1] For Initial Exams of new or existing vessels or examinations of existing vessels subject to major conversion, vessel owners may request an Initial Exam at a foreign port. The Coast Guard encourages this practice particularly in situations where the vessel is out of operation or under construction. In such instances, owners are required to reimburse the Coast Guard for travel and subsistence expenses. Such early examination allows the Coast Guard to identify and resolve problems before the vessel arrives at the first U.S. port.

[2] It is important to note that overseas examinations are contingent upon the availability of Coast Guard resources. Because of this, close coordination between inspection offices, the Coast Guard MSC, shipyards, vessel owners, and classification societies is encouraged in the strongest terms to ensure efficient use of USCG vessel examination personnel.

[3] Once the first U. S. embarkation port is determined, the designer or owner's representative should schedule the examination with the appropriate Coast Guard OCMI responsible for overseas inspections at the ship's location at least forty-five days in advance so the Coast Guard may assemble the examination team.

[4] The following is a list of OCMIs and areas of responsibility for overseas foreign passenger vessel examinations:

Sector Boston - Eastern coast of Canada

Activities Europe - Europe, Africa, and countries bordering the Mediterranean Sea, Red Sea, Persian Gulf, and Arabian Sea

Sector Miami or Sector San Juan – Bahamas and Caribbean (unit that handles the vessel's first U.S. port should take responsibility)

Sector New Orleans - South and Central America, East Coast of Mexico, West Coast of Mexico south of 20-00N latitude

Sector San Diego - West Coast of Mexico north of 20-00 N latitude

Sector Seattle- Western coast of Canada

Far East Activities- Asia (excluding countries bordering the Mediterranean Sea, Red Sea, Persian Gulf, and Arabian Sea), Australia, and Diego Garcia

Sector Guam- Commonwealth of the Northern Marianas Islands

[5] For ships under construction, the SFP Exam will occur prior to and separate from the Initial Exam.

[6] The OCMI will perform an assessment (a basic walk-through of the ship) approximately one week before the examination to verify the vessel is prepared for the Initial COC Exam. The Coast Guard should only perform this assessment when the vessel is complete and the Administration is prepared to issue a Passenger Ship Safety Certificate (PSSC) at the end of the Initial COC Exam.

[7] Vessel operators should anticipate three to five days for the Initial COC Exam depending on the size of the vessel and complexity of the systems onboard, and another one to two days for existing ships to accommodate the SFP Exam. The Coast Guard examination team will be made up of four to six PSCOs from the MSC, the Cruise Ship National Center of Expertise, the OCMI responsible for overseas inspections, and the OCMI at the first U.S. port of call.

[8] An Initial COC Exam initiated overseas is typically completed at the first U.S. port call where passengers will embark. This is to allow the vessel's crew to become proficient with their duties and responsibilities. The OCMI responsible for the overseas portion of the examination shall forward any pertinent material (discrepancy lists, ship plans, etc) to the OCMI responsible for completing the exam. Provided no more than one year has elapsed since an Initial Exam was initiated overseas and the vessel condition does not dictate, the OCMI at the first U.S. embarkation port will not require re-examination of the items inspected and found satisfactory during the overseas part of the exam.

[9] Vessel operators should anticipate and plan for at least one day in port for the finalization of any Initial COC Exam initiated overseas, depending upon the number of outstanding discrepancies. The examination will cover fire and abandon ship drills; any outstanding discrepancies or items not inspected during the overseas portion of the examination; and any unresolved plan review, overseas inspection, or classification society issues.

[10] The vessel owner considering an overseas examination should submit a request in writing to the OCMI responsible for inspections at the vessel location. Requests should include the following information: a status of plan review by MSC, including any unresolved plan review comments; Stage of vessel construction and delivery date; suggested location and

dates for the inspection; company point of contact; and acknowledgment to reimburse the Coast Guard for all expenses incurred.

[11] The Coast Guard permits up to two years between the beginning of the overseas portion of the Initial Exam and the associated Initial Exam conclusion at the vessel's first U.S. embarkation port provided there are no modifications to the vessel's SFP or means of egress in the intervening period. If more than two years have passed since the beginning of the Initial COC Exam, the USCG will complete a new Initial COC Exam at the first U.S. embarkation port.

[12] Upon approval of the request, the OCMI responsible for inspections at the vessel location will assemble an examination team. The team should consist of four to six persons depending on the type of examination and the size of the vessel. Besides the current OCMI, the team should include an inspector from the office responsible for inspections at the vessel's first U.S. embarkation port, a MSC staff engineer, and any other personnel deemed necessary by the OCMI.

(2) Changes since plan review. The PSCOs should discuss all changes made to the vessel since plan review with the vessel's representative. If the designer made significant changes to the vessel, the PSCOs should require the designer to submit revised plans of the affected areas to the MSC for further plan review.

(3) Underway examinations. Requests for an underway Initial COC Exam will rarely be approved. OCMIs must direct requests for an underway Initial COC Exam to Commandant (CG-CVC). Before granting an underway inspection request, Commandant (CG-CVC) will consider and evaluate whether:

(a) The vessel is newly constructed;

(b) A structural fire protection examination has been previously completed (failure to complete the structural fire protection examination will preclude an underway examination);

(c) All plan review comments have been resolved (outstanding plan review comments will preclude an underway examination);

(d) Passengers will be on board during the examination (generally, passengers on board will preclude an underway examination);

(e) Sea trials will be conducted during the examination (generally, sea trials would preclude an underway examination);

(f) The underway portion of the exam is between two U.S. ports (generally, an overseas underway examination is not acceptable);
(g) Pierside time is allocated to examine items that cannot be accomplished at sea; and,

(h) The local OCMI agrees that an underway examination will be advantageous to the Coast Guard.

(4) Additional plans. PSCOs should require the designer or owner's representative to provide the following additional flag-approved plans (or drawings showing the same details as the drawings submitted for approval) during the IFVPE:

(a) Fixed fire extinguishing system plans for systems required by SOLAS Chapter II-2.

(b) Fixed fire detection and alarm system plans.

(c) Ventilation system plans.

(d) Lifesaving plan.

(e) Fire control plan.

(5) Examination plan. The lead PSCO and the vessel designer or owner's representative should agree on a written Initial COC Exam plan that provides the sequence of the examination to include the PSCO, flag Administration, classification society, owner's representative, ship's personnel, shipyard representatives, and any other parties critical to the examination. If necessary, the lead PSCO should modify the sequence in consultation with the interested parties.

g. Initial COC Exam. The purpose of the Initial COC Exam is to verify that the vessel is in substantial compliance with the applicable SOLAS Convention as well as the applicable provisions of the MARPOL 73/78, ILO 147, STCW and Load Line Conventions. The Initial COC Exam should occur during construction or during lay-up so PSCOs can inspect the vessel and test systems not readily examined on an operating vessel.

(1) Initial COC Exam focus. The examination team should focus on structural fire protection, fire protection systems, means of escape and related signs, lifesaving equipment, engineering systems, emergency fire and boat drills, and the resolution of plan review comments. PSCOs[2] may vary the scope of the Initial

[2] For the purposes of an SFP and/or Initial COC examination, PSCOs may include a Foreign Passenger Vessel Examiner, a qualified inspector from an overseas Activity, or an engineer from the Marine Safety Center.

COC Exam as

necessary to verify classification society and flag Administration controls on quality of construction and agreement with the reviewed drawings. The Initial COC Exam will include:

(a) Document check. The examination usually begins with a meeting between the inspection team and the master, at which time the PSCOs should examine the following:

[1] Documents and certificates.

aa. Certificate of Registry (Photocopy needed for Coast Guard records).

bb. Classification document.

cc. Passenger Ship Safety Certificate (Photocopy needed for Coast Guard Records).

dd. Loadline Certificate.

ee. IOPP Certificate.

ff. Tonnage Certificate.

gg. Certificate of Financial Responsibility.

hh. Document of Compliance.

ii. Safe Management Certificate.

kk. Safe Manning Certificate (Photocopy needed for Coast Guard records).

ll. Lifeboatmen Certificates.

mm. Liferaft Servicing Certificates.

nn. Fire Extinguisher Servicing Certificates.

oo. SOLAS Training Manual.

pp. Oil Record Book.

qq. Garbage Handling Plan and Record Book.

rr. International Ship Security Certificate.

ss. Continuous Synopsis Record.

tt. Dangerous Cargo Manifest (if vessel is or will be carrying dangerous goods)

[2] Crew documentation.

aa. Medical certificates for crew members (cannot be more than 2 years old).

bb. Officers licenses (approved by the flag State).

[3] Logbook entries:

aa. Departure/ arrival tests of navigation equipment.

bb. Required stability logging.

cc. Lifesaving training.

dd. Weekly/monthly (as appropriate) lifesaving equipment inspections/tests.

ee. Weekly drills.

ff. Muster list.

gg. Oil Record Book.

hh. Garbage logging in accordance with MARPOL.

ii. Security training.

(b) SFP design features. If a SFP examination has not been conducted before the initial examination, the inspectors may examine structural fire protection design features as discussed in Paragraph C.1.d of this Chapter.

(c) Escape routes. PSCOs should examine doors for signs entitled "EXIT," "EMERGENCY EXIT," or having similar markings. Doors marked on the Means of Escape Diagram as a primary or secondary escape should be free of locking devices at all times. The inspectors may also check escape stairways for the removal of combustibles.

(d) Automatic sprinkler systems. PSCOs should check these systems at the section valves to verify proper operation of the automatic alarm, fault alarm, and the means to prevent unauthorized operation. They should also verify

automatic sprinkler system valve arrangements to ensure that the system is properly lined-up to provide water pressure from the pressurized storage tank and that backup water supply pumps are available and functional.

(e) Fire pumps and hydrants. PSCOs should examine fire main hydrants for coverage and for proper outfitting with hoses, spanner wrenches, and nozzles. PSCOs may witness tests of all fire pumps and emergency fire pumps including automatic controls for proper operation. PSCOs should witness a test of the fire main system at normal working pressure and a test of water flow from at least two remote hydrants.

(f) Fixed smoke and heat detection systems. PSCOs should examine smoke detectors by random sampling using appropriate testing devices provided by the vessel or owner's representative. PSCOs may examine centralized smoke detection alarm panels during detector tests in each detection zone for proper operation.

(g) Fire doors and watertight doors. PSCOs should verify the proper and safe operation of fire and watertight doors with regard to opening and closing mechanisms, releasing devices and bridge indicating panels required by the applicable convention. Examiners should verify that fire doors properly self-close and latch when released, especially when the ventilation systems are operating, to ensure there is no effect on fire door closure.

(h) Engineering systems. PSCOs should observe the operation of machinery such as the emergency generator (under load), steering system, remote fuel oil shut-off valves, oily water separators, fire and bilge pumps, fixed gas fire extinguishing system alarms, etc. Examiners should pay particular attention to the condition of piping, ducting, general condition of the boilers (main or auxiliary), presence of any fuel or oil system leaks, and general maintenance during a walkthrough of the engineering spaces.

(i) Emergency lighting. PSCOs should observe a test of the emergency lighting to determine proper location and adequacy using both the emergency generator and the transitional source of power (batteries) for 30 minutes under full load.

(j) Proliferation of combustible construction. Method II construction under SOLAS 29, 48, and 60 Conventions permitted wood and other combustible materials in the construction of interior divisions. PSCOs should discourage the reinstallation of combustible construction materials when making modifications. Examiners should verify original construction in accordance with approved plans, but note that reinstallation of previously-approved

combustible items is not acceptable. All modifications made after 1 July 1998 must be of noncombustible material, as required in Regulation II-2/41-1.

(k) Lifesaving systems/launching appliances. Lifesaving systems include lifeboats, davit-launched and float-free liferafts, rescue boats, marine evacuation systems, ring buoys, lifejackets, immersion suits/anti-exposure suits, distress flares, and line-throwing apparatus. PSCOs should do the following:

[1] Verify that the quantity and type of primary lifesaving equipment is satisfactory based on the number of passengers and crew permitted by the SOLAS certificates and that these are in good condition and properly installed and stowed. Examiners should pay particular attention to the material condition of the lifeboats, lifeboat on-load release mechanisms, falls, and davits. Examiners should also check liferafts for proper stowage.

[2] Witness the deployment of a davit-launched liferaft. Examiners should not accept a training raft used for such testing unless it is substantially the same size and type of raft as used for primary lifesaving (e.g. do not accept a 12 person raft test if the vessel uses 35 person rafts). Examiners should witness the crew rigging liferafts for deployment to ensure the davit arrangement and crew competence is suitable to deploy the required amount of primary liferafts during the 30-minute timeframe allowed by SOLAS. Examiners should examine float-free raft installations for proper stowage.

[3] Require the vessel to lower to the water, release, operate, and recover all lifeboats on the outboard side of the vessel. Since the initial examination often includes inspections overseas and at a U.S. port, the vessel should make every effort to perform this drill for both sides of the vessel. If this is not possible, PSCOs should issue a requirement to lower, release, operate and recover all lifeboats on the untested side of the vessel at the next U.S. port and should witness the crew start lifeboat engines for lifeboats on the untested side.

[4] Witness deployment of at least 50 percent of Marine Evacuation Systems (MES) as specified in Part 2, Section 7 of Resolution MSC.81(70). If the remaining untested MES units differ substantially from the deployed units, the PSCOs should also witness the deployment of these units. In addition, for new installations, the PSCOs should witness a partial evacuation test in accordance with Part 2, Section 7 of Resolution MSC.81(70). (This partial evacuation test is not required for existing vessels with existing MES installations during an Initial COC Exam.) The partial evacuation test does not involve timed evacuation, but involves a check whether the system

interferes with launching other lifesaving equipment fitted on board and that the system and its liferafts are clear of obstructions such as propellers, and stabilizers.

[5] Require the owner/operator to make MES installations not tested at the initial examination available for deployment testing within 12 months of the Initial COC Exam.

[6] Check personal lifesaving appliances including ring buoys, lifejackets, and immersion suits/anti-exposure suits at random for condition, type, stowage, and quantities.

(l) Passenger launches. If a vessel uses its lifeboats as launches or has separate vessels that will be used as launches while anchored in U.S. ports, the launches are required to have either a PSSC, Lifeboat/Tender Safety Equipment Certificate, or a Coast Guard issued Certificate of Inspection. Where the lifeboats used as launches are listed on the Record of Equipment for the Passenger Ship Safety Certificate, a separate PSSC is not expected and a separate Certificate of Compliance for each such lifeboat is not required.

[1] If the launches possess either of the first two certificates issued by the flag Administration, PSCOs should verify that the launch meets the appropriate requirements. Personnel that operate lifeboats as tenders must hold qualifications equivalent to a licensed operator.

[2] For example, a licensed master or deck officer may serve as a tender operator. A lifeboatman may operate a tender after completing a training course developed by the company that covers competencies in coastal navigation and COLREGs provided the Administration has reviewed and accepted the training course. In the latter case, the ship must maintain records that indicate the lifeboatmen are trained in accordance with the Administration-accepted course.

(m) Counter flooding/cross-flooding systems. PSCOs should examine these systems to ensure that they do not violate the structural fire protection provisions of SOLAS 74. If the system is an active system (valves or other arrangements), the examiner may require a system test to ensure that it is operating properly.

(n) Training and drills. PSCOs must evaluate the proficiency of the crew in carrying out emergency response operations including fire and boat drills during the examination; the provisions of the vessel's training manual and the emergency shipboard organization; the communication skills of crewmembers and the officers' and crews' ability to give and receive orders and to pass

information and commands during drills; and the procedural effectiveness of the crew in crowd control, crisis management, lifejacket distribution, and passenger accountability. PSCOs shall attend the passenger muster. At the muster, PSCOs shall verify crew competency as evidenced by instructions provided to passengers on the use of life jackets, on actions to take in an emergency situation, and actions taken by corridor and stairway monitors to direct passengers to muster stations. In situations where an exam is scheduled and passengers have not embarked, witnessing a passenger muster is not required.

(o) Pollution prevention. PSCOs should examine oil pollution prevention equipment and at least one of the five waste streams (oil pollution prevention systems, black water, hazardous waste, non-hazardous waste, or gray water) with a focus on verifying regulatory compliance. Any environmental discrepancies between the vessel's Safety Management System and the actual process being followed should be brought to the attention of the vessel's Master and company representative. If major non-conformities are identified that cause a serious threat to the overall safety of the ship, PSCOs should follow MSM Volume II, Material Inspection, COMDTINST M16000.7 (series), Section D, Chapter 2 in order to determine if an intervention is warranted. Deficiencies or discrepancies regarding the execution of the hazardous waste management program should also immediately be brought to the attention of the applicable Environmental Protection Agency (EPA) office or RCRA program office, as appropriate.

(p) Navigation safety. PSCOs should examine or test navigation equipment required by 33 CFR 164 and automatic identification systems required by SOLAS Chapter V. This includes witnessing tests of all bridge electronic equipment; verifying that the vessel has the proper updated charts and current publications; and, witnessing tests of the steering gear.

(q) Housekeeping. Improper storage, opened packing materials, or any other items that may impair the means of egress or contribute to fire load are common operational problems. PSCOs must bring all such hazards noted during the examination to the master's attention for correction.

(r) Combustible volume calculations. PSCOs should validate combustible volume calculations and supporting documentation.

(s) Vessel security measures. PSCOs must examine the vessel's security program in accordance with the general requirements of the Maritime Transportation Security Act, SOLAS Chapter XI-2, and the ISPS Code, as applicable for the

vessel as outlined in MSM Volume II, Material Inspection, COMDTINST M16000.7 (series), Section D, Chapter 1 paying particular attention to--

[1] Performance of ship security duties;

[2] Access control to the vessel;

[3] Control of embarkation of persons and their effects;

[4] Authorized access to and monitoring of restricted areas;

[5] Monitoring deck areas and areas adjacent to the ship;

[6] Supervision of the handling of cargo and ship stores; and,

[7] Ready availability of security communications.

(t) Cruise Vessel Security and Safety Act (CVSSA) requirements. The CVSSA applies to all passenger vessels that are authorized to carry at least 250 passengers; have onboard sleeping facilities for each passenger; are on voyages that embark or disembark passengers in the United States; and are not engaged on a coastwise voyage. PSCOs should verify compliance with CVSSA requirements by following the procedures outlined in CG-543 Policy Letter 11-09: CVSSA of 2010 Implementation Procedures and CG-543 Policy Letter 11-10 CVSSA; Implementation of Training Standards and Procedures.

(u) Transitional power test. PSCOs should witness a 30-minute test of transitional power.

(v) Smoke extraction system. PSCOs should witness a test of the smoke extraction system for vessels with atriums as defined in SOLAS.

(2) Expanded examination. If during the course of the examination there is reason to believe the vessel's safety equipment, material condition, or crew performance is substandard, the PSCO may expand the examination into those areas of non-compliance.

(3) Completion of examination. Upon successful completion of the initial examination, with no major deficiencies discovered, PSCOs should issue a Certificate of Compliance, CG-3585 to the vessel. PSCOs should also issue a single Certificate of Compliance covering all lifeboats used as tenders, provided these hold valid PSSC or Lifeboat/Tender Safety Equipment Certificates. The COC is valid for up to one year, provided that the vessel maintains a valid PSSC.

PSCOs may clear minor deficiencies on the spot or at the vessel's next scheduled inspection as determined by the OCMI.

2. Annual Certificate of Compliance (COC) Examination

a. Applicability. Foreign passenger vessels that embark passengers at U.S. ports or that visit U.S. ports with U.S. citizens embarked as passengers are required to recertify on an annual basis. Foreign passenger ships are responsible for requesting an annual examination. An annual examination must be completed before the expiration of the vessel's current Certificate of Compliance if the vessel wishes to depart from a U.S. port. The Coast Guard will examine vessels which return to service after the COC has expired but do not meet the application requirements of an Initial COC exam in accordance with the procedures outlined in this section.

b. Preparing for the Annual COC Exam. OCMIs should require the owner or operator to schedule the examination at least 30 days prior to the desired inspection date. The Annual COC Exam should take approximately five to eight hours depending on the vessel size and number of PSCOs available, provided there are no major nonconformities. The Coast Guard examination team should include a minimum of 3 PSCOs and 1 Port State Control Examiner.

(1) PSCOs should communicate with the ship to describe the scope of the exam, including the certificates, documents and plans that must be made available, and to request a copy of the PSSC to prepare for the exam.

(2) PSCOs should ask the owner if the vessel underwent any changes since the initial plan review. If there are any changes affecting SFP or means of egress, the PSCO should require the owner to submit the changes to the Administration and the MSC for plan review.

(3) PSCOs should request a written copy of all outstanding Coast Guard, Administration, RO, or classification society items.

c. The Annual COC Exam. Annual COC examinations are performed to ensure foreign passenger vessels continue to maintain all the systems previously examined during the Initial COC Exam, in proper operating condition and that the flag Administration and RO, if applicable, have performed annual renewal surveys as required by SOLAS Chapter I, Regulation 7. PSCOs should focus on the vessel's firefighting, lifesaving, and emergency systems and should witness a comprehensive fire and boat drill. In addition, PSCOs should examine the vessel for modifications that would affect the vessel's structural fire protection and means of escape that were completed without approval from the vessel's flag Administration or review by the MSC. PSCOs should complete the following during the Annual COC Exam:

(1) Document check. PSCOs should examine the documents and certificates outlined in Paragraph C.1.g of this Chapter.

(2) General structural fire protection. PSCOs must perform a walk-through examination of the vessel to verify that no modifications affecting structural fire protection or means of egress have been made without approved plans. Examiners should not require removal of overhead or bulkhead panels if the vessel remains unmodified from the configuration reviewed during MSC plan review. If modifications have occurred since MSC plan review, PSCOs should require the vessel to remove randomly selected overhead and bulkhead panels in way of modified vertical zone bulkhead penetrations and draft stop locations. Examiners should check whether enclosed stairways and escape routes are properly marked and free of stored combustible material.

(3) Automatic sprinkler systems. PSCOs should spot check these systems at randomly selected zone valves or zone test valves for water flow and alarms at the control panel due to the drop in water pressure or flow switch. PSCOs should verify automatic sprinkler system valve arrangements to ensure that the system is properly lined-up to provide water pressure from the pressurized storage tank and that backup water supply pumps are available and functional.

(4) Fire pumps and hydrants. PSCOs should spot check fire main hydrants for coverage and for proper outfitting with hoses, spanner wrenches, and nozzles. PSCOs should witness tests of all fire pumps and emergency fire pumps, including automatic controls for proper operation. PSCOs should also witness a test of the fire main system at normal working pressure and a test of water flow from at least two remote hydrants.

(5) Fixed smoke and heat detection systems. PSCOs should spot check smoke detectors by random sampling, using appropriate testing devices provided by the vessel or owner's representative. PSCOs should examine bridge smoke detection alarm panels during detector tests in each detection zone for proper operation.

(6) Fire doors and watertight doors. PSCOs should randomly examine fire and watertight doors for proper release, closure, and opening.

(7) Engineering systems. PSCOs should observe the operation of machinery such as the emergency generator (under load) and the steering system. Examiners should spot check remote fuel oil shut-off valves, oily water separators, fire and bilge pumps, fixed gas fire extinguishing system alarms, etc. Inspectors may spot check the condition of piping, ducting, general condition of the boilers (main or auxiliary), presence of any fuel or oil system leaks, and general maintenance during a walkthrough of the engineering spaces.

(8) Lifesaving systems. PSCOs should examine the quantity and type of all primary lifesaving equipment and randomly examine all secondary lifesaving equipment.

(a) Examiners should pay particular attention to the material condition of the lifeboats, lifeboat on-load release mechanisms, falls, and davits. During the boat drill, the vessel should lower to the water, release, motor, and recover all lifeboats on the outboard side of the vessel. Inspectors must witness this drill and also witness the crew start lifeboat engines for lifeboats on the inboard side, which cannot be lowered to the water. Examiners should pay special attention to any additional equipment that has been added after an increase in the vessel's capacity.

(b) Examiners should witness the deployment of a davit-launched liferaft. Examiners should not accept a training raft used for such testing unless it is substantially the same size and type of raft as used for primary lifesaving (e.g. do not accept a 12 person raft test if the vessel uses 35 person rafts).

(c) Examiners should witness the crew rigging liferafts for deployment to ensure the davit arrangement and crew competence is suitable to deploy the required amount of primary liferafts during the 30-minute timeframe allowed by SOLAS. Examiners should examine float-free raft installations for proper stowage.

(9) Passenger launches. If a vessel uses its lifeboats as launches or has separate vessels that will be used as launches while anchored in U.S. ports, the launches are required to have either a PSSC, Lifeboat/Tender Safety Equipment Certificate, or a Coast Guard issued Certificate of Inspection.

(a) If the launches possess either of the first two certificates issued by the flag Administration, PSCOs should verify that the launch meets the appropriate requirements. Personnel that operate lifeboats as tenders must hold qualifications equivalent to a licensed operator. For example, a licensed master or deck officer may serve as a tender operator.

(b) A lifeboatman may operate a tender after completing a training course developed by the company that covers competencies in coastal navigation and COLREGs provided the Administration has reviewed and accepted the training course. In the latter case, the ship must maintain records that indicate the lifeboatmen are trained in accordance with the Administration-accepted course.

(10) Crew training and drills. PSCOs must evaluate the proficiency of the crew in carrying out emergency response operations including fire and boat drills during

the examination; the provisions of the vessel's training manual and the emergency shipboard organization; the communication skills of crewmembers and the officers' and crews' ability to give and receive orders and to pass information and commands during drills; and the procedural effectiveness of the crew in crowd control, crisis management, lifejacket distribution, and passenger accountability. PSCOs shall attend the passenger muster. At the muster, PSCOs shall verify crew competency as evidenced by instructions provided to passengers on the use of life jackets, on actions to take in an emergency situation, and actions taken by corridor and stairway monitors to direct passengers to muster stations. In situations where an exam is scheduled and passengers have not embarked, witnessing a passenger muster is not required.

(11) Pollution prevention. PSCOs should examine oil pollution prevention equipment and at least one of the five waste streams (oil pollution prevention systems, black water, hazardous waste, non-hazardous waste, or gray water) with a focus on verifying regulatory compliance. Any environmental discrepancies between the vessel's Safety Management System and the actual process being followed should be brought to the attention of the vessel's Master and company representative. If major non-conformities are identified that cause a serious threat to the overall safety of the ship, PSCOs should follow MSM Volume II, Material Inspection, COMDTINST M16000.7 (series), Section D, Chapter 2 in order to determine if an intervention is warranted. Deficiencies or discrepancies regarding the execution of the hazardous waste management program should also immediately be brought to the attention of the applicable Environmental Protection Agency (EPA) office or RCRA program office, as appropriate.

(12) Navigation safety. PSCOs should examine or test navigation equipment required by 33 CFR 164 and automatic identification systems required by SOLAS Chapter V. This includes witnessing tests of all bridge electronic equipment; verifying that the vessel has the proper updated charts and current publications; and, witnessing tests of the steering gear.

(13) Housekeeping. Improper storage, opened packing materials, or any other items that may impair the means of egress or contribute to fire load are common operational problems. PSCOs must bring all such hazards noted during the examination to the master's attention for correction.

(14) Vessel security measures. PSCOs must examine the vessel's security program in accordance with the general requirements of the Maritime Transportation Security Act, SOLAS Chapter XI-2, and the ISPS Code, as applicable for the vessel as outlined in MSM Volume II, Material Inspection, COMDTINST M16000.7 (series), Section D, Chapter 1 paying particular attention to:

(a) Performance of ship security duties;

(b) Access control to the vessel;

(c) Control of embarkation of persons and their effects;

(d) Authorized access to and monitoring of restricted areas;

(e) Monitoring deck areas and areas adjacent to the ship;

(f) Supervision of the handling of cargo and ship stores; and,

(g) Ready availability of security communications.

(15) Cruise Vessel Security and Safety Act (CVSSA). The CVSSA applies to all passenger vessels that are authorized to carry at least 250 passengers; have onboard sleeping facilities for each passenger; are on voyages that embark or disembark passengers in the United States; and are not engaged on a coastwise voyage. PSCOs should verify compliance with CVSSA requirements by following the procedures outlined in Commandant (CG-CVC) Policy Letter 11-09: CVSSA of 2010 Implementation Procedures and Commandant (CG-CVC) Policy Letter 11-10 CVSSA; Implementation of Training Standards and Procedures.

(16) General Walkthrough. PSCOs should conduct a walkthrough of all machinery, service and public spaces, as well as a random sample of accommodation spaces, to check for safety hazards and to ensure no modifications have taken place.

(17) Expanded examination. If during the course of the examination there is reason to believe the vessel's safety equipment, material condition, or crew performance is substandard, the PSCO may expand the examination into those areas of non-compliance.

d. Completion of examination. Upon successful completion of the initial examination, with no major deficiencies discovered, the PSCOs should issue a Certificate of Compliance, CG-3585 to the vessel. This certificate is valid for up to one year, provided that the vessel holds a valid PSSC. Also issue a single COC covering all lifeboats used as tenders provided these hold valid PSSCs or Lifeboat/Tender Safety Equipment Certificates. PSCOs may clear minor deficiencies on the spot or at the vessel's next scheduled inspection, as determined by the OCMI.

---

3. Periodic Foreign Passenger Vessel Examinations

a. Applicability. In order for a foreign passenger vessel's COC to remain valid, the Coast Guard must perform examinations of reduced scope at periodic intervals until the certificate is due for its annual renewal. The frequency of periodic exams is determined by compliance history. Generally, periodic COC exams should be conducted on a semi-annual basis for vessels having no Coast Guard-issued safety or environmental detention under the provisions of SOLAS, International Load Line, and MARPOL Conventions. For a vessel which is detained by the Coast Guard under these provisions, Commandant (CG-CVC-2) will determine during the IMO Review and Detention Reporting (MPS-WI-CVC2-02) process any additional Coast Guard oversight or increase in exam intervals, which may include quarterly exams. CG-CVC-2 will enter any increased oversight requirements or exam intervals as a Special Note in MISLE.

b. Missed examinations. If a vessel misses a required periodic examination due to deployment outside of U.S. waters, the Coast Guard will perform a periodic examination upon the vessel's return as follows:

(1) For vessels that are only making port calls or only disembarking passengers at U.S. ports during this return voyage, the Coast Guard will perform the required periodic examination when overdue at the first U.S. port of call.

(2) For vessels that will embark passengers at one or more U.S. ports during this return voyage, the Coast Guard will perform the required periodic examination when overdue at the first U.S. embarkation port.

(3) A semi-annual examination is overdue when more than 7 months have passed since the annual COC examination.

(4) A quarterly examination (as applicable) is overdue when more than 1 month has passed since the nominal quarterly control verification examination date (i.e. 3, 6,and 9 months following the last annual COC examination).

c. Preparing for the Periodic COC Exam. OCMIs should require the owner or operator to schedule the examination at least 14 days prior to the desired inspection date. The Periodic COC Exam should take approximately five to eight hours depending on the vessel size and number of PSCOs available, provided there are no major nonconformities. The Coast Guard examination team should include 3 PSCOs and 3 Port State Control Examiners.

(1) PSCOs should communicate with the ship to describe the scope of the exam, including the certificates, documents and plans that must be made available, and to request a copy of the PSSC to prepare for the exam.

(2) PSCOs should ask the owner if the vessel underwent any changes since the initial plan review. If there are any changes affecting SFP or means of egress, the PSCO should require the owner to submit the changes to the Administration and the MSC for plan review.

(3) PSCOs should request a written copy of all outstanding Coast Guard, Administration, RO, or classification society items.

d. The Periodic COC Examination. Periodic examinations are conducted to ensure that vessels are being operated in a safe manner and should focus on the performance of officers and crew, with specific attention paid to their training and knowledge of the ship's emergency procedures, firefighting, lifesaving systems, and performance during the drills. The overall material condition of the ship should not have appreciably changed since the annual COC examination. However, during the general walkthrough PSCOs may vary the scope of the examination to test systems or components if an observed non-compliant condition exists, or if the general condition of the vessel or training of the crew is of concern. At a minimum, PSCOs should examine the following:

(1) Crew training and drills. PSCOs must evaluate the proficiency of the crew in carrying out emergency response operations including fire and boat drills during the examination; the provisions of the vessel’s training manual and the emergency shipboard organization; the communication skills of crewmembers and the officers’ and crews’ ability to give and receive orders and to pass information and commands during drills; and the procedural effectiveness of the crew in crowd control, crisis management, lifejacket distribution, and passenger accountability. PSCOs shall attend the passenger muster. At the muster, PSCOs shall verify crew competency as evidenced by instructions provided to passengers on the use of life jackets, on actions to take in an emergency situation, and actions taken by corridor and stairway monitors to direct passengers to muster stations. In situations where an exam is scheduled and passengers have not embarked, witnessing a passenger muster is not required.

(2) Muster list and emergency instructions. PSCOs should examine the muster list and emergency instructions for correctness and completeness. These should address all elements listed in Regulation III/37 of SOLAS 74, as amended (Regulation III/53 prior to 1998 amendments). PSCOs should question crewmembers at random to ensure that they know their responsibilities and muster stations during the various ship emergency evolutions.

(3) SOLAS training manual. PSCOs should examine the muster list and emergency instructions for correctness and completeness. These should address all elements

listed in Regulation III/37 of SOLAS 74, as amended (Regulation III/53 prior to 1998 amendments). The inspectors should question crewmembers at random to ensure they know their responsibilities and muster stations during the various ship emergency evolutions.

(4) Log book entries. PSCOs should review the vessel's logbook for the following:

(a) The vessel has conducted required drills.

(b) The vessel has conducted crew training.

(c) The vessel has conducted all tests required by 33 CFR 164.25.

(5) Vessel security measures. PSCOs must examine the vessel's security program in accordance with the general requirements of the Maritime Transportation Security Act, SOLAS Chapter XI-2, and the ISPS Code, as applicable for the vessel as outlined in MSM Volume II, Material Inspection, COMDTINST M16000.7 (series), Section D, Chapter 1 paying particular attention to:

(a) Performance of ship security duties;

(b) Access control to the vessel;

(c) Control of Embarkation of persons and their effects;

(d) Authorized access to and monitoring of restricted areas;

(e) Monitoring deck areas and areas adjacent to the ship;

(f) Supervision of the handling of cargo and ship stores; and,

(g) Ready availability of security communications.

(6) Pollution prevention. PSCOs should examine oil pollution prevention equipment and at least one of the five waste streams (oil pollution prevention systems, black water, hazardous waste, non-hazardous waste, or gray water) with a focus on verifying regulatory compliance. Any environmental discrepancies between the vessel's Safety Management System and the actual process being followed should be brought to the attention of the vessel's Master and company representative. If major non-conformities are identified that cause a serious threat to the overall safety of the ship, PSCOs should follow MSM Volume II, Material Inspection, COMDTINST M16000.7 (series), Section D, Chapter 2 in order to determine if an intervention is warranted. Deficiencies or discrepancies regarding the

execution of the hazardous waste management program should also immediately be brought to the attention of the applicable Environmental Protection Agency (EPA) office or RCRA program office, as appropriate.

(7) Cruise Vessel Security and Safety Act (CVSSA). The CVSSA applies to all passenger vessels that are authorized to carry at least 250 passengers; have onboard sleeping facilities for each passenger; are on voyages that embark or disembark passengers in the United States; and are not engaged on a coastwise voyage. PSCOs should verify compliance with CVSSA requirements by following the procedures outlined in Commandant (CG-CVC) Policy Letter 11-09: CVSSA of 2010 Implementation Procedures and Commandant (CG-CVC) Policy Letter 11-10 CVSSA; Implementation of Training Standards and Procedures.

(8) General walk-through. PSCOs should conduct a walkthrough of all machinery, service and public spaces, as well as a random sample of accommodation spaces, to check for safety hazards and to ensure no modifications have taken place.

(9) Expanded examination. If during the course of the examination there is reason to believe the vessel's safety equipment, material condition, or crew performance is substandard, the PSCO may expand the examination into those areas of non-compliance.

f. Completion of the Examination. Upon completion of the Periodic COC Examination, PSCOs shall endorse the existing COC for the vessel and for lifeboats used as tenders. PSCOs may clear minor deficiencies on the spot or at the vessel's next scheduled examination as determined by the OCMI.

---

4. Examination of Cargo Vessels that Carry Up to 12 Persons in Addition to the Crew

a. All cargo vessels of countries party to SOLAS that embark and carry up to 12 passengers from a port of the United States shall be targeted in accordance with the procedures outlined in MSM Volume II, Material Inspection, COMDTINST M16000.7 (series), Chapter D4.

b. PSCOs should use procedures applicable to the examination of foreign freight vessels when examining cargo vessels carrying up to 12 persons in addition to the crew. The examination must also verify that safe facilities are provided for those additional persons.

(1) It is important to remember that the vessel is being examined as a freight vessel, not a passenger vessel. A detention or other control action should be exercised if the vessel is unfit to proceed to sea or an unreasonable risk to the environment.

However, the inspector may not specifically prohibit the carriage of persons in addition to the crew and then allow the vessel to sail with a crew on board. If the vessel is unsafe, it is also unsafe for the crew.

(2) Drills are to be conducted during annual examinations. They may be required whenever there is reason to question the condition of equipment or the efficiency of operation.

E. MISLE

PSCOs must document all examination activities in MISLE using the most current Mission Management System Work Instruction on MISLE data entry for foreign vessel arrivals, examinations, and operational controls. Additionally, PSCOs should include the location of drills, the systems examined, the side of ship from which life boats were launched, and the waste stream that was examined in the MISLE narrative. If a vessel is expected to arrive within another OCMI or COTP zone before MISLE can be updated, information regarding the boarding and any deficiencies or control action taken must be relayed to the next port of call in the most expedient means available (e.g., telephone, email, etc.).

CHAPTER 1: MARPOL 73/78 VESSEL REQUIREMENTS

A. INTRODUCTION

In 1973, the International Maritime Organization (IMO) adopted the International Convention for the Prevention of Pollution by Ships, which was later modified by Protocol in 1978. This convention, known as MARPOL 73/78, seeks to limit shipborne pollution by restricting operational pollution and reducing the possibility of accidental pollution. When a national government accepts MARPOL 73/78, it is also obligated to make the requirements part of domestic law. MARPOL 73/78 consists of six separate annexes, each of which is designed to combat a particular class of pollutants. The six annexes are:

Regulations for the Prevention of Pollution from Ships, MARPOL 73/78	
Annex	**Title**
I	Regulations for the Prevention of Pollution by Oil
II	Regulations for the Control of Pollution by Noxious Liquid Substances (chemicals) in bulk
III	Regulations for the Prevention of Pollution by Harmful Substances in Packaged Form
IV	Regulations for the Prevention of Pollution by Sewage from Ships
V	Regulations for the Prevention of Pollution by Garbage from Ships
VI	Regulations for the Prevention of Air Pollution from Ships

The United States has ratified Annexes I and II (both in force internationally and mandatory for nations party to MARPOL 73/78), III, V, and VI. MARPOL Annexes III, IV, V, and VI are optional annexes, which require separate ratification even for nation's signatory to MARPOL 73/78. An optional annex enters into force 1 year from the date on which at least 15 nations, representing 50 percent of the world's shipping tonnage, have ratified it. Annex V entered into force on December 31, 1988; Annex III on July 1, 1992; Annex IV on August 1, 2005; and Annex VI (revised) July 1, 2010. This chapter describes the MARPOL 73/78 procedures that should be followed during exams. The enforcement guidance for MARPOL 73/78 Annex I discrepancies discovered during exams is in the MSM Volume I, Administration and Management, COMDTINST M16000.6 (series), Chapter 4. During vessel examinations, the Coast Guard ensures MARPOL 73/78 compliance and checks for violations. MARPOL 73/78 deficiencies discovered during an exam must be immediately reported to the ship's master or owner's representative. The United States has set forth, in the Act to Prevent Pollution from Ships (APPS) (33 U.S.C. 1901 et seq.), a civil penalty of not more than $25,000 for each MARPOL 73/78 violation. A strong, fair, and consistent enforcement program is essential to ensure MARPOL 73/78's success in significantly reducing marine pollution

from ships. For guidance on MARPOL 73/78 compliance for foreign flag ships in U.S. waters, please see MSM Volume II, Materiel Inspection, COMDTINST M16000.7A, Chapter D2.

---

1. Liaison

a. Port State Control representatives should liaison with the following groups and ensure each is aware of its responsibilities with respect to MARPOL 73/78:

(1) U.S. Department of Agriculture Animal and Plant Health Inspection Service (APHIS) and Plant Protection and Quarantine (PPQ) personnel.

(2) Facility managers.

(3) Port authorities.

(4) Shipping agents.

(5) Reception facilities.

(6) Marina owners/operators.

(7) Reservists.

(8) Auxiliarists.

(9) Local Coast Guard Group and Station personnel.

(10) National Marine Fisheries Service personnel.

---

2. Compliance

a. Port State Control Examiners/Officers shall check for compliance with MARPOL during the course of their vessel inspections and that this is noted in their inspection books..

---

3. Violations

a. The Chief, Inspections Division should ensure that all MARPOL violations are properly entered into MISLE and that any possible violation is thoroughly and accurately investigated and documented.

b. In the case of a suspected MARPOL violation that cannot be supported by sufficient evidence, any available information should be entered so that suspected violators can be flagged by other ports as possible sources of noncompliance.

---

4. Interaction

a. The Port State Control Examiners/Officers should maintain positive and proactive interaction with APHIS and PPQ inspectors. When resources allow, these inspectors board every vessel arriving from a foreign port and are an extremely valuable resource to the MARPOL enforcement program.

b. Port State Control personnel should conduct periodic MARPOL training at local APHIS offices to ensure that APHIS inspectors are aware of the Coast Guard's interest in MARPOL V compliance, specifically, the importance of notifying the Coast Guard of possible violations and sending any evidence of noncompliance to the Coast Guard unit as soon as possible.

---

5. Facility Certificates of Adequacy (COA)

a. Port State Control personnel should liaison with Facility inspectors to reexamine all local waterfront facilities and determine which are required to have a Certificate of Adequacy (COA) for each annex and whether the facility holds a valid COA.

---

6. Facility Disposal Methods

b. Coast Guard personnel should be responsive to reports from vessels of facility inadequacy. In the case of such a report, the incident should be thoroughly investigated and take appropriate corrective action.

---

7. Unit Training

a. The MITO or unit training officer should coordinate periodic unit training on MARPOL requirements, enforcement procedures, compliance, and effective civil penalty case preparation.

b. Inviting APHIS inspectors to speak to the unit is also highly encouraged.

8. Education and Training

B. AUTHORITY

(1) MARPOL Annexes I, II, V, and VI have been incorporated into U.S. law by APPS, which requires the Coast Guard to draft regulations and enforce the provisions of these MARPOL 73/78 Annexes.

(2) The MARPOL regulations for inspected vessels are in 33 CFR Part 151 and the MARPOL regulations for uninspected vessels are in 46 CFR Subchapter C. The regulations specify ship-generated discharge restrictions for all vessels operating on all waters subject to U.S. jurisdiction. These regulations apply to U.S. vessels regardless of where the vessel is operating.

(3) For MARPOL-related regulations for reception facilities, see 33 CFR Part 158.

(4) MARPOL Annex III was implemented by The Hazardous Materials Transportation Act (HMTA). For the relevant regulations, see 49 CFR Parts 171, 172, 173, 174. For Harmful Substances Carried by Sea in Packaged Form or in Freight Containers, Portable Tanks or Road and Rail Tank Wagons, see 49 CFR Part 176. The regulations list the criteria for the designation, description, and classification of those hazardous materials.

C. DEFINITIONS

The following definitions are provided to assist in understanding the terminology associated with the regulatory requirements for enforcing the provisions of MARPOL 73/78.

1. Adequate Reception Facility

Adequate reception facility, as defined in 46 CFR 153.2, "means each facility certified as adequate under 33 CFR 158.160 and each facility provided by an administration signatory to MARPOL 73/78 under Regulation 7 of Annex II."

---

2. Administration

Administration, as defined in article 2(5) of MARPOL 73/78, "means the Government of the state under whose authority the ship is operating. For fixed or floating platforms engaged in exploration and exploitation of the coastal seabed and subsoil, the Administration is the Government of the coastal state exercising sovereign rights for the purpose of exploration and exploitation of their natural resources."

---

3. Animal and Plant Health Inspection Service (APHIS)

APHIS operates under the Customs and Border Protection. Its local officers, officers, board U.S. and foreign vessels upon vessel arrival at U.S. ports to enforce sanitation and health regulations regarding foreign food and plants.

---

4. Ash and Clinkers Handling

Ash and clinkers are the by-products of shipboard incinerators and coal-burning boilers. They are considered operational wastes. The term "clinker" can also be used to refer to plastic residue or pieces that have not been fully reduced to ash by incineration or barrel burning. Plastic clinkers must be treated as plastic and retained aboard ship for discharge at port reception facilities.

---

5. Built

Built, as defined in 46 CFR 153.2, "means that a ship's construction has reached any of the following stages:

a. The keel is laid.

b. The mass of the partially assembled ship is 50,000 kg.

c. The mass of the partially assembled ship is one percent of the estimated mass of the completed ship."

---

6. Cargo Associated Wastes

Cargo associated wastes, as defined in 33 CFR 151.05, "means all materials which have become wastes as a result of use on board ship for cargo stowage and handling. Cargo associated wastes include, but are not limited to dunnage, shoring, pallets, lining and packing materials, plywood, paper, cardboard, wire, and steel strapping."

---

7. Cargo Residue and Sweepings

Cargo residue and sweepings are the remnants of any cargo material on board that either cannot be placed in proper cargo holds or that remains after unloading is completed. This includes both loading excess or spillage and unloading residual and spillage. Cargo residue and sweepings should be in small quantities. They should be treated as garbage under MARPOL Annex V and are subject to the same restrictions, except when the residue or sweepings are substances defined or listed under the other annexes to the MARPOL convention.

---

8. Certificate of Adequacy (COA)

Certificate of Adequacy (COA), as defined in 33 CFR 158.120, "means a document issued by the Coast Guard or other authorized agency that certifies a port or terminal meets the requirements of this part with respect to reception facilities under [APPS] MARPOL 73/78, and has Form A, Form B, or Form C attached."

---

9. Commercial Fishing Facility

Commercial fishing facility, as defined in 33 CFR 158.120, "means docks, piers, processing houses or other facilities which receive commercial fishery products from ships."

---

10. Daily Vessel Average

Daily vessel average, as defined in 33 CFR 158.120, "means the total number of oceangoing tankers, or any other oceangoing ships of 400 gross tons or more, carrying residues and mixtures containing oil, serviced over a typical continuous 12 month period, divided by 365."

---

11. Discharge

Discharge, as defined in 33 CFR 151.05, "means, as defined by MARPOL 73/78 in relation to harmful substances or effluent containing such substances, means any release, however caused from a ship, and includes any escape, disposal, spilling, leaking, pumping, emitting or emptying. It does not include--

a. Dumping within the meaning of the Convention on the Prevention of Marine Pollution by Dumping of Wastes and other Matter, done at London on November 13, 1972; or

b. The release of harmful substances directly arising from the exploration, exploitation, and associated offshore processing of seabed mineral resources; or

c. The release of harmful substances for purposes of legitimate scientific research relating to pollution abatement or control."

---

12. Dishwater

Dishwater, as defined in 33 CFR 151.05, "means the liquid residue from the manual or automatic washing of dishes and cooking utensils which have been pre-cleaned to the extent that any food particles adhering to them would not normally interfere with the operation of automatic dishwashers."

---

13. Equivalent

Equivalent means an alternative for a fitting, material, appliance, or apparatus that is allowed by the Administration and is at least as effective as the MARPOL 73/78 requirement. The substitution of an operational method of control of oil discharge in lieu of design and construction features required by MARPOL 73/78 is not an equivalent.

---

14. Existing Ship

Existing ship, as defined in 33 CFR 151.05, "means a ship that is not a new ship."

---

15. Form A

Form A, as defined in 33 CFR 158.120, "means the application for a reception facility Certificate of Adequacy for oil, Form USCG-CG-5401A (9–85)." International Oil Pollution Prevention (IOPP) supplement, Form OMB Approval No. 2415-D543 is also a Form A.

16. Form B

Form B, as defined in 33 CFR 185.120, means the application for a reception facility Certificate of Adequacy for NLS, Coast Guard form USCG-CG-5401B(2–87)." Form B is also an IOPP supplement.

17. Form C

Form C, as defined in 33 CFR 158.120, "means the application for a Certificate of Adequacy for a Reception Facility for Garbage, Coast Guard form USCG-CG-5401C."

18. Garbage

Garbage, as defined in 33 CFR 151.05, "means all kinds of victual, domestic, and operational waste, excluding fresh fish and parts thereof, generated during the normal operation of the ship and liable to be disposed of continuously or periodically, except dishwater, graywater, and those substances that are defined or listed in other annexes to MARPOL 73/78."

19. Graywater

Graywater, as defined in 33 CFR 151.105, "means drainage from dishwasher, shower, laundry, bath, and washbasin drains and does not include drainage from toilets, urinals, hospitals, and cargo spaces."

20. Harmful Substance

Harmful substance, as defined in 33 CFR 151.05, "means any substance which, if introduced into the sea, is liable to create hazards to human health, harm living resources and marine life, damage amenities or interfere with other legitimate uses of the sea, and includes any substance subject to control by MARPOL 73/78."

21. Hazardous Material

a. Hazardous material means a liquid material or substance that is--

b. Flammable or combustible;

c. Designated a hazardous substance under section 311(b) of the Federal Water Pollution Control Act (33 U.S.C. 1321); or

d. Designated a hazardous material under section 104 of the HMTA (49 U.S.C. app. 1803).

> **NOTE:** The Environmental Protection Agency (EPA) designates certain materials as hazardous substances in 40 CFR, Table 116-4.a.
>
> The Coast Guard designates hazardous materials that are transported by water as bulk liquids in 46 CFR Part 153.

---

22. High Viscosity NLS

High viscosity NLS, as defined in 33 CFR 158.120, "includes Category A NLSs having a viscosity of at least 25 mPa.s at 20°C and at least 25 mPa.s at the time they are unloaded, high viscosity Category B NLSs, and high viscosity Category C NLSs."

---

23. High Viscosity Category B NLS

High viscosity Category B NLS, as defined in 33 CFR 158.120, "means any Category B NLS having a viscosity of at least 25 mPa.s at 20°C and at least 25 mPa.s at the time it is unloaded."

---

24. High Viscosity Category C NLS

High viscosity Category C NLS, as defined in 33 CFR 158.120, "means any Category C NLS having a viscosity of at least 60 mPa.s at 20°C and at least 60 mPa.s at the time it is unloaded."

---

25. IMO Bulk Chemical Code

The term IMO Bulk Chemical Code includes the IMO International Code for the Construction and Equipment of Ships Carrying Dangerous Chemicals in Bulk, Resolution Marine Environmental Protection Committee (MEPC) 19(22), 1985 and the IMO Code for the Construction and Equipment of Ships Carrying Dangerous Chemicals in Bulk, Resolution MEPC 20(22), 1985.

---

26. IMO Certificates

IMO certificates include a Certificate of Fitness (COF) for the Carriage of Dangerous Chemicals in Bulk, issued under the IMO Code for the Construction and Equipment of Ships Carrying Dangerous Chemicals in Bulk, Resolution MEPC 20(22), 1985; and an International COF for the Carriage of Dangerous Chemicals in Bulk, issued under the IMO International Code for the Construction and Equipment of Ships Carrying Dangerous Chemicals in Bulk, Resolution MEPC 19(22), 1985.

---

27. International Oil Pollution Prevention (IOPP) Certificate

IOPP Certificate means a certificate issued to a ship by an Administration party to MARPOL 73/78 after the ship has successfully completed a survey to ensure its compliance with MARPOL 73/78 requirements. An IOPP Certificate is only issued to ships whose flag state is a party to MARPOL 73/78.

---

28. IOPP Certificate Equivalency

IOPP Certificate equivalency means valid documentation showing that a non-Party ship has been surveyed in accordance with and complies with the requirements of MARPOL 73/78. Evidence of compliance may be issued by either the government of a country or a recognized classification society. The evidence of compliance must contain all of the information in and have substantially the same format as the IOPP Certificate, Form A or Form B as appropriate.

---

29. Liquid

Liquid, as defined in 46 CFR 153.2, “means each substance having a vapor pressure of 172 kPa or less at 37.8°C.”

---

30. MARPOL 73/78

MARPOL 73/78, as defined in 33 CFR 151.05, “means the International Convention for the Prevention of Pollution from Ships, 1973, as modified by the Protocol of 1978 relating to that Convention. ”

---

31. Maintenance Waste

Maintenance waste, as defined in 33 CFR 151.05, ”means materials collected while maintaining and operating the ship, including, but not limited to, soot, machinery deposits, scraped paint, deck sweepings, wiping wastes, and rags.”

---

32. Medical Waste

Medical waste, as defined in 33 CFR 151.05, “means isolation wastes, infectious agents, human blood and blood products, pathological wastes, sharps, body parts, contaminated bedding, surgical wastes and potentially contaminated laboratory wastes, dialysis wastes, and such additional medical items as prescribed by the Administrator of the EPA by regulation.”

---

33. Mineral and Oil Industry Shorebase

Mineral and oil industry shorebase, as defined in 33 CFR 158.120, “means a place or onshore structure or facility which is a base of operations for ships serving the mineral and oil industry.”

---

34. Nearest Land

Nearest land, as defined in 33 CFR 151.05, “means from the baseline from which the territorial sea of the territory in question is established in accordance with international law, except that, for the purposes of these regulations, “from the nearest land” off the north eastern coast of Australia shall mean from a line drawn from a point on the coast of Australia in—latitude 11°00' South, longitude 142°08' East to a point in—latitude 10°35' South, longitude 141°55' East, thence to a point—latitude 10°00' South, longitude 142°00' East, thence to a point—latitude 9°10' South, longitude 143°52' East, thence to a point—latitude 9°00' South, longitude 144°30' East, thence to a point—latitude 13°00' South, longitude 144°00' East, thence to a point—latitude 15°00' South, longitude 146°00' East, thence to a point—latitude 18°00' South, longitude 147°00' East, thence to a point—latitude 21°00' South, longitude 153°00' East, thence to a point on the coast of Australia in latitude 24°42' South, longitude 153°15' East.”

---

35. New Ship

New ship, as defined in 33 CFR 151.05, "means a ship—

(1) For which the building contract is placed after December 31, 1975; or

(2) In the absence of a building contract, the keel of which is laid or which is at a similar stage of construction after June 30, 1976; or

(3) The delivery of which is after December 31, 1979; or

(4) That has undergone a major conversion—

(i) For which the contract is placed after December 31, 1975;

(ii) In the absence of a contract, the construction work of which is begun after June 30, 1976; or

(iii) That is completed after December 31, 1979.

(5) For the purposes of [33 CFR] 151.26 through 151.28, which is delivered on or after April 4, 1993."

---

36. Non-Party

Non-Party means a country that has not ratified MARPOL 73/78 or Annex V of MARPOL 73/78.

---

37. Noxious Liquid Substance (NLS)

Noxious Liquid Substance (NLS), as defined in 33 CFR 158.120, "means—

(1) Each substance listed in §151.47 or §151.49 of this chapter;

(2) Each substance having an "A", "B", "C", or "D" beside it's name in the column headed "Pollution Category" in table 1 of 46 CFR Part 153; and

(3) Each substance that is identified as an NLS in a written permission issued under 46 CFR 153.900(d)."

---

38. Oceangoing Ship

Oceangoing ship, as defined in 33 CFR 151.05, "means a ship that--

(1) Is operated under the authority of the United States and engages in international voyages;

(2) Is operated under the authority of the United States and is certificated for ocean service;

(3) Is operated under the authority of the United States and is certificated for coastwise service beyond three miles from land;

(4) Is operated under the authority of the United States and operates at any time seaward of the outermost boundary of the territorial sea of the United States as defined in §2.22 of this chapter; or

(5) Is operated under the authority of a country other than the United States.

(6) Note: A Canadian or U.S. ship being operated exclusively on the Great Lakes of North America or their connecting and tributary waters, or exclusively on the internal waters of the United States and Canada; is not an "oceangoing" ship."

---

39. Oil

Oil means petroleum in any form, including crude oil, fuel oil, sludge, oil refuse, and refined products. Oil does not include animal or vegetable based oil, nor does it include NLSs designated under Annex II of MARPOL 73/78.

---

40. Oily Mixture

Oily mixture means a mixture with any oil content, including bilge slops, oily wastes, oil residues (sludge), oily ballast water, and washings from cargo oil tanks.

---

41. Operational Waste

Operational waste, as defined in 33 CFR 151.05, "means all cargo-associated waste, maintenance waste, and cargo residues other than oil residues and NLS cargo residues. "Operational wastes" includes ashes and clinkers (*i.e.* , a mass of incombustible matter

fused together by heat) from shipboard incinerators and coal-burning boilers but does not include plastic clinkers, which are treated as an Annex V waste, or oily rags, which are treated as an Annex I waste."

---

42. Owner

Owner means any person holding the title to or, in the absence of title, any other indicia of ownership of, a ship or terminal. "Owner" does not include a person who, without participating in the management or operation of a ship or terminal, holds indicia of ownership primarily to protect a security interest in the ship or terminal.

---

43. Party

Party means a country that has ratified MARPOL 73/78 and Annex V of MARPOL 73/78.

---

44. Person

Person, as defined in 33 CFR 151.05, "means an individual, firm, public or private corporation, partnership, association, State, municipality, commission, political subdivision of a State, or any interstate body. "

---

45. Person in Charge

Person in Charge (PIC), as defined in 33 CFR 158.120, means an owner, operator, or a person authorized to act on behalf of a port or terminal. Note: The "person in charge" under this part is not necessarily the same person as the "person in charge" referred to in parts 151, 154, 155, and 156 of [33 CFR Subchapter O] (as defined in § 154.105 of [33 CFR Subchapter O].)"

---

46. Plastic

Plastic, as defined in 33 CFR 151.05, "means any garbage that is solid material, that contains as an essential ingredient one or more synthetic organic high polymers, and that is formed or shaped either during the manufacture of the polymer or polymers or during fabrication into a finished product by heat or pressure or both. "Degradable" plastics, which are composed of combinations of degradable starches and are either (a) synthetically produced or (b) naturally produced but harvested and adapted for use, are plastics under this part. Naturally produced plastics such as crabshells and other types of

shells, which appear normally in the marine environment, are not plastics under this part. Plastics possess material properties ranging from hard and brittle to soft and elastic. Plastics are used for a variety of marine applications including, but not limited to: food wrappings, products for personal hygiene, packaging (vaporproof barriers, bottles, containers, and liners), ship construction (fiberglass and laminated structures, siding, piping insulation, flooring, carpets, fabrics, adhesives, and electrical and electronic components), disposable eating-utensils and cups (including styrene products), bags, sheeting, floats, synthetic fishing nets, monofilament fishing line, strapping bands, hardhats, and synthetic ropes and lines." Degradable plastic products on the commercial market are considered plastic within the context of MARPOL enforcement.

---

47. Port

Port, as defined in 33 CFR 158.120, "means--

(1) A group of terminals that combines to act as a unit and be considered a port for the purposes of this part;

(2) A port authority or other organization that chooses to be considered a port for the purposes of this part; or

(3) A place or facility that has been specifically designated as a port by the COTP."

---

48. Public Vessel

Public vessel means any warship, naval auxiliary or other ship owned or operated by a country and engaged in non-commercial service.

---

49. Reception Facility

Reception facility, as defined in 33 CFR 158.120, "means anything capable of receiving shipboard oily mixtures or NLS residue, or receiving garbage, including, but not limited to—

(1) Fixed piping that conveys residues and mixtures from the ship to a storage or treatment system;

(2) Tank barges, railroad cars, tank trucks, or other mobile facilities;

(3) Containers or other receptacles that are used as temporary storage for garbage; or

(4) Any combination of fixed and mobile facilities."

---

50. Recreational Boating Facility

Recreational boating facility, as defined in 33 CFR 158.120, “means a facility that is capable of providing wharfage or other services for 10 or more recreational vessels. It includes, but is not limited to, marinas, boatyards, and yacht clubs, but does not include a place or facility containing only an unattended launching ramp.

---

51. Regulated NLS Cargo

Regulated NLS cargo, as defined in 33 CFR 158.120, “includes each Category A or high viscosity or solidifying Category B or C NLS cargo listed in Table 1 of 46 CFR Part 153 that contains a reference to 153.908(a) or 153.908(b) in the "Special Requirements" column of that table and is unloaded at the port or terminal within a typical continuous 12 month period either before or after application is made for a Certificate of Adequacy.”

---

52. Residues and Mixtures containing NLSs (NLS residue)

Residues and mixtures containing NLSs (NLS residue), as defined in 33 CFR 151.05, “means—

(1) Any Category A, B, C, or D NLS cargo retained on the ship because it fails to meet consignee specifications;

(2) Any part of a Category A, B, C, or D NLS cargo remaining on the ship after the NLS is discharged to the consignee, including but not limited to puddles on the tank bottom and in sumps, clingage in the tanks, and substance remaining in the pipes; or

(3) Any material contaminated with Category A, B, C, or D NLS cargo, including but not limited to bilge slops, ballast, hose drip pan contents, and tank wash water.”

---

53. Ship

Ship, as defined in 33 CFR 151.05, “means a vessel of any type whatsoever, operating in the marine environment. This includes hydrofoils, air-cushion vehicles, submersibles, floating craft whether self-propelled or not, and fixed or floating drilling rigs and other platforms.”

---

54. Slop Tank

Slop tank, as defined in 46 CFR 153.2, "includes slop tanks and cargo tanks used as slop tanks.

---

55. Solidifying NLS

Solidifying NLS, as defined in 33 CFR 158.120, "means a Category A, B, or C NLS that has a melting point—

(1) Greater than 0 °C but less than 15 °C and a temperature, measured under the procedure in 46 CFR 153.908(d), that is less than 5 °C above its melting point at the time it is unloaded; or

(2) 15 °C or greater and has a temperature, measured under the procedure in 46 CFR 153.908(d), that is less than 10 °C above its melting point at the time it is unloaded."

---

56. Special Area

Special area, as defined in 33 CFR 151.05, "means a sea area, where for recognized technical reasons in relation to its oceanographical and ecological condition and to the particular character of the traffic, the adoption of special mandatory methods for the prevention of sea pollution by oil, NLSs, or garbage is required."

---

57. Tank Barge

Tank barge means a tank vessel not equipped with a means of self-propulsion.

---

58. Terminal

Terminal, as defined in 33 CFR 151.05, "means an onshore facility or an offshore structure located in the navigable waters of the United States or subject to the jurisdiction of the United States and used, or intended to be used, as a port or facility for the transfer or other handling of a harmful substance. The Coast Guard interprets commercial fishing facilities, recreational boating facilities, and mineral and oil industry shorebases to be terminals for the purposes of Annex V of MARPOL 73/78, since these facilities normally provide wharfage and other services, including garbage handling, for ships."

---

59. The Act

The Act, as defined in 33 CFR 150.120 for the purposes of 33 CFR Part 150, "means the Act to Prevent Pollution from Ships (94 Stat. 2297, 33 U.S.C. 1901 et seq)."
In this chapter of the MSM Volume II, Material Inspection, COMDTINST M16000.7A (series), the Act to Prevent Pollution from Ships is referred to by the acronym APPS.

60. Victual Waste

Victual waste, as defined in 33 CFR 151.05, "means any spoiled or unspoiled food waste."

D. MARPOL 73/78 ANNEX I GUIDANCE AND PROCEDURES

The MARPOL Annex I Compliance Checklist (Figure E1-1 of this Chapter) may be used to aid in an Annex I compliance verification for both U.S and foreign vessels.

1. MARPOL compliance for U.S ships

a. Coast Guard Marine Inspectors conduct the MARPOL 73/78 Annex I surveys and issue the IOPP Certificates for U.S. ships, using the guidance in NVICs 8-83 and 6-94. IOPP surveys of U.S. inspected ships will coincide with regularly scheduled inspections unless required earlier. The compliance verification procedures outlined below for Port State Control exams should be referred to when conducting MARPOL surveys on U.S. ships.

b. Each U.S. oil tanker of 150 GT and above and each other U.S. ship of 400 GT and above that engages in voyages to ports or offshore terminals under the jurisdiction of other parties to MARPOL 73/78 must have a valid IOPP Certificate.

c. Inspected ships engaged solely in coastwise trade are not required to have an IOPP Certificate, since they are not making an international voyage.

d. Such ships must have the Form A or Form B Supplement, as appropriate.

e. These ships are required to have MARPOL 73/78 pollution prevention equipment on board and functioning, as required by 33 CFR Parts 151, 155, and 157, and in accordance with the policy stated in NVIC 7-83.

f. IOPP Certificate surveys of U.S. uninspected ships are performed only upon request. U.S uninspected oceangoing ships not visiting foreign ports do not need an IOPP Certificate. However, these ships are required to have MARPOL 73/78 pollution prevention equipment on board and functioning, as required by 33 CFR Parts 151, 155, and 157.

g. ORB requirements. Oceangoing oil tankers of 150 GT and above and all other oceangoing ships 400 GT and above, without regard to the ship's age, are required by MARPOL Annex I and 33 CFR 151.25 to maintain an ORB. U.S. ships are required to obtain the U.S. version of the ORB (yellow cover) from a Sector, Activity or MSU. The U.S. version of the ORB contains Part I for Machinery Space Operations and Part II for Cargo/Ballast Operations as a single volume. Oil tankers and ships with bulk oil cargo spaces having an aggregate capacity of 200 m^3 or more must maintain one ORB solely dedicated to machinery space operations and another ORB solely dedicated to cargo/ballast operations. Other ships only have to maintain one ORB for machinery space operations.

---

2. Port State Control (PSC) Examinations

a. All foreign vessels within the applicable gross tonnage requirements in MARPOL Annex I, without exception, must have on board a valid IOPP Certificate or for non-party vessels (vessels whose flag State is not signatory to MARPOL); a valid IOPP Certificate equivalent.

b. Intentional discharges of oil contaminated bilge water and sludge in direct contravention of MARPOL requirements is a significant threat to the marine environment. In 2005, a review of several years of data from Coast Guard PSC exams indicated an increased frequency of non-compliance with MARPOL Annex I requirements. MARPOL Annex I violation investigations have demonstrated that ship owners and vessel crews have concealed accidental or deliberate discharges of oily waste and sludge. These discharges were usually caused by malfunctioning equipment, poorly managed maintenance programs or as an effort to reduce operational costs.

---

3. Documentation Review

a. IOPP Certificate. The IOPP Certificate and supplement details the ship’s arrangements and equipment for meeting applicable Annex I requirements. The Certificate shows the expiration date and as applicable, endorsements for the annual and intermediate surveys. The required supplement is either a Form A, Record of Construction and Equipment for Ships Other than Oil Tankers; or a

Form B, Record of Construction and Equipment for Oil Tankers. The Form A and B Supplements provide specific information on the ship and its pollution prevention equipment. The IOPP Certificate or Certificate equivalency, for non-parties, allows a PSCO to easily determine if a ship has all of the required MARPOL Annex I equipment on board.

b. The PSCO must check the IOPP Certificate for validity and verify ship name and registry, carefully noting any exemptions or equivalencies in pollution prevention arrangements. Determine if any equivalents in Section 6 of Form A or in section 10 of Form B are acceptable to the United States. This may require contacting Commandant (CG-CVC). Verify the vessel arrangements and equipment listed on the IOPP match the vessel's equipment and are in accordance with the Annex I requirements.

---

4. Oil Record Book (ORB) requirements

a. Oceangoing oil tankers of 150 GT and above and all other oceangoing ships 400 GT and above, without regard to the ship's age, are required by 33 CFR 151.25 to maintain an ORB.

b. Foreign Vessels signatory to MARPOL are required to use their country's version of the ORB. Some Parties publish Part I and Part II of the ORB separately. The ORB is acceptable whether published together as a single volume or in two separate volumes.

c. Foreign Vessels not signatory to MARPOL are required to have and maintain the ORB on board. Any equivalent format that provides the same information as the ORB is acceptable.

d. Shipboard oil transfer and discharge operations are required to be recorded in the ORB. The PSCO must conduct a spot check of the ORB. The master's signature is required to be on each page of the ORB; in addition, the officer in charge of the listed operation must sign each entry. Recent entries must be reviewed to ascertain whether these activities represent the actual procedures followed by shipboard personnel. The Coast Guard and Department of Justice may use a falsified ORB as criminal evidence against a ship and its crewmembers suspected of an illegal oil discharge.

e. The PSCO should investigate any ORB irregularities, which may include:

(1) If amounts processed exceed rated capacity of the pollution prevention equipment, compare system through-put to what is indicated on the IOPP. For

example, the ORB indicates 30 cubic meters (approx. 7920 gallons) of oily water processed in 3 hours by an Oily Water Separator (OWS) having a maximum capacity of 5 cubic meters per hour;

(2) Check entries for wrong codes, dates that are not in order and missing pages;

(3) Repetitive entries that may indicate falsification of ORB activities;

(4) If waste oil, sludge, bilge and other tank levels noted during the inspection vary significantly from last entries. For example, the ORB indicates a liquid level in the vessel's sludge tank at the completion of the previous voyage, the sludge tank is currently at a lower level, and the ORB does not indicate how the ship disposed of this liquid; and

(5) Recorded quantities of oily bilge water pumped to holding tanks or processed by the OWS directly from the bilge wells that do not compare to observed conditions within the machinery space. Recorded quantities should be compared to the observed bilge loads associated with such conditions as leaking pump glands, piping systems, main and auxiliary equipment casing leaks or problems from other systems that cause releases into the bilge.

f. Appendix III to MARPOL Annex I provides additional guidelines for ORB entries; the PSCO must be familiar with this guidance when conducting an expanded examination. The ORB must address the following, as appropriate:

(1) For machinery space operations (all ships): ballasting and cleaning of oil fuel tanks; discharge of dirty ballast containing or cleaning water from oil fuel tanks; disposal of oily residues; and discharge overboard or disposal otherwise of bilge water which has accumulated in machinery spaces; equipment malfunction or irregularities;

(2) For cargo/ballast operations (oil tankers): loading of cargo oil; internal transfer of oil during voyage; unloading of cargo oil; ballasting of cargo tanks and dedicated clean ballast tanks; cleaning of cargo tanks including crude oil washing; discharge of ballast except from segregated ballast tanks; discharge water from slop tanks; closing of valves necessary for isolation of dedicated clean ballast tanks from cargo and stripping lines after slop tank discharge operations; and disposal of residues.

5. Oil Discharge Monitor and Control System (commonly referred to as ODME) Record Review

a. All oil tankers of 150 GT or more or other ships with bulk cargo spaces with an aggregate capacity of 200 m^3 or more are required to have oil discharge monitors with automatic recording devices on board and operating. The ship's IOPP certificate should be checked to determine if the ship has an automatic device installed and functioning. Per 33 CFR 157.37, the monitor continuous records are to be kept on board for 1 year from the date of the last entry and be available for review for 3 years from the date of the last.

b. Monitoring devices that produce a continuous record showing the date and concentration of oil discharges is an important enforcement tool for ensuring compliance with MARPOL 73/78 discharge restrictions. For ships equipped with such monitors, the continuous recordings should be reviewed at each boarding to verify proper functioning of the device and ensure that oil discharges are in accordance with MARPOL 73/78.

c. The PSCO must review the IOPP Certificate to determine whether the ship needs an oil content/discharge monitor equipped with an automatic recording device. Equipment should match what is listed on the IOPP certificate.

d. The PSCO should confirm that the ODME records for the previous year are onboard and that machinery bilge space records from the past three years are onboard.

e. The PSCO should review the dates, times, and concentration of discharges from the most recent voyage by checking the ORB. Check the last discharge on the continuous record to determine if the concentration discharged and the location of the discharge were authorized and compare it to the last discharge recorded in the ORB.

f. If the vessel arrived in ballast and deballasted while in port, the deballasting entries in the ORB should correspond to the monitor recording. If the monitor is inoperative or indicates a discharge in excess of MARPOL 73/78 limits, the problem should be indicated in the ORB what action the ship has taken to correct the problems.

g. PSCOs should be aware that the Coast Guard has learned of instances where such monitoring equipment has been tampered with, similar to OWS equipment in order to discharge oily waste that exceeds allowable limits. An example of tampering is manually changing recorder entries such as vessel speed and dates.

h. If an unauthorized discharge is indicated by the continuous records, conduct a more thorough review as described in Paragraph D.4.b of this Chapter. Additional evidence of the discharge must be obtained to support submission of a discharge violation for civil penalty proceedings or for referral to another Flag State.

i. Shipboard Oil Pollution Emergency Plan (SOPEP). Every oil tanker of 150 GT and above, and every ship other than an oil tanker of 400 GT and above, must have a SOPEP on board. The PSCO should verify that the vessel has a SOPEP on board that has been approved by the vessel's Flag Administration. Pollution response equipment listed in the SOPEP should be spot checked and the phone numbers and points of contact listed in the SOPEP are up to date, i.e., National Response Center, local COTP or Sector offices, etc.

j. Vessel examination and operational inspection of equipment. Considering that many of the primary systems supporting the propulsion equipment will be secured during in-port inspections and that close examination of various components such as piping runs, control valves, heat exchangers, and pump glands is necessary to develop an adequate perception as to the equipment's condition during actual operation, the PSCO should conduct a walk-through examination of the main machinery spaces to form a general impression of the state of the engine room, machinery spaces and the physical condition of systems, equipment and components, being alert for excessive leakage of water, oil and other substances into the machinery space bilges. The PSCO should also evaluate the vessel's Safety Management System (SMS) procedures regarding the management of bilge and sludge type wastes routinely generated by various systems.

k. During this walk-through observation, the PSCO should examine overboard piping to identify conditions that may indicate the disassembly of piping segments, flanges, blanks, or valves tied into any systems that lead overboard. This may include other systems such as overboard cooling water systems, drains, boiler blow downs, etc. Pay particular attention to loose bolts, blanked flanges, capped pipes, dead-end valves and tees, chipped paint, evidence of work such as handprints against the hull or piping, or even fresh paint, oil stains, drippings, splatter oil on valve stems, particularly near systems capable of directing fluids overboard. Portable pumps and hoses, although common shipboard equipment, are occasionally used for improper transfers; check for improper tie-in with systems capable of discharging overboard. Be alert to independent segments of piping and fittings stowed, but designed to fit in-between certain flanges of equipment capable of discharging overboard.

l. The discovery of conditions described above may not be evidence of improper activities, but must be considered with other factors discovered during the

examination; in addition, some conditions may provide a direct indication of potential improper activities which require further inspection. The PSCO should not consider a single observation as conclusive indication of illegal activity. In fact, suspicious conditions may have a reasonable and innocent explanation, so carefully consider the totality of these observations when making an assessment.

m. During all PSC exams and other inspections verifying MARPOL Annex I compliance, the PSCO should conduct operational tests of the OWS and Oil Content Meter (OCM) to determine the equipment functions properly together as a system and not only as individual system components. Properly operating equipment should run trouble free, and personnel responsible for operating the equipment should be knowledgeable in all aspects of the equipment.

---

6. Oily Water Separator.

a. Prior to conducting an operational test of the OWS, verify that the OWS has been approved by the USCG or appropriate Administration. If the OWS is approved in accordance with Resolution MEPC.107(49), the following should be used to determine compliance:

(1) Conduct a cursory review of 15 parts per million (ppm) bilge monitoring/alarm records.

(2) Oily water monitoring/bilge alarm equipment should be designed to store data for up to 18 months and should be able to display or print a protocol for inspectors if needed.

(3) Recorded items should include: date, time, alarm status, and operating status of the 15 ppm separator.

(4) Inspectors should compare those entries against existing Oil Record Book entries to determine any non-conformities.

(5) All 15-ppm monitor/bilge alarms should be sealed to prevent willful manipulation of overboard discharge data.

(6) At each International Oil Pollution Prevention (IOPP) Certificate renewal, the accuracy of the 15-ppm oily water monitors and/or bilge alarms should be completed by an authorized equipment testing company.

(7) PSCOs should accept a valid IOPP certificate accompanied by the manufacturer's calibration certificate as proof of compliance.

(8) Manufacturers' calibration certificates cannot be accepted as proof of compliance if they are more than 5 years old.

(9) An alternative to manufacturer's calibration testing is that the entire alarm unit may be replaced by a calibrated 15 ppm alarm. A bilge alarm should not be accepted as compliant if it is over five years old unless it has been calibrated as discussed above. When this alternative is used, appropriate installation documentation should be verified.

(10) It is not necessary to witness an OWS test unless tampering or malfunctioning is suspected or if the manufacturer's calibration certificate is more than 5 years old.

(a) An important feature of an OWS approved under MEPC.107(49) is that a bilge alarm must activate when clean water is used for cleaning or calibration of the unit.

(11) For equipment meeting older standards, the PSCO should require an operational test of the OWS using the below procedures. During the test, great care should be exercised by the ship's crew to prevent overboard releases of oil, even if such efforts require the separation of pipe or flanges after the discharge control devices.

(12) Identify crewmembers responsible for the operation of the OWS based on the Safety Management System or by asking the chief engineer. During the operational test, the PSCO should observe and determine the crew's competency and knowledge of the equipment and associated piping. Crewmember inability to successfully operate pollution prevention equipment may indicate that the equipment is not routinely used. If the equipment is not functioning correctly, examine the ORB for entries that indicate when the system failed and the reason for the failure.

(13) Consult the manufacturer's operations manual for operating the OWS and OCM and follow any relevant procedures provided.

(14) Regardless of the manufacturer's instructions, the PSCO should additionally ensure the following:

(a) The operational test should last at least 15-20 minutes and should be generally trouble free.

(b) The fluid entering the OWS for processing comes directly from the bilge

holding tank or rose box and is not diluted by open sea or fresh water connections.

(c) There is no dilution of the processed oily water sample line to the OCM. The OCM outlet fluid should be visible as well. Some systems use a three-way valve which must be positioned correctly to prevent any dilution of the OWS discharge sample to the OCM.

(d) If the vessel uses a source tank to supply oily water to the OWS, the source tank level should drop proportionately in comparison to the capacity of the OWS for the period of time the equipment was run. This drop in tank level is based on the size and configuration of the source tank and the duration of the test. In some arrangements the level may not drop an appreciable amount.

(e) The OWS effluent is visibly clean. Ask the crew to obtain a sample of OWS effluent in a clean container. The sample should be similar in appearance to the outlet flow from the OCM and should have no visible surface oil.

(f) If the OWS equipment uses consumable filter elements, coalescing media, recording paper, etc., verify that reasonable quantities of these consumables are onboard. In addition, the OWS manufacturer's recommended spare parts should also be onboard.

---

7. Oil Content Monitor/Meter.

Per MARPOL Annex I, ships of 10,000 gross tonnage and above, and ships carrying large quantities of fuel oil, are required to have a an OCM. PSCOs should witness an operational test of the alarm (usually at the same time as the OWS) using the below procedures:

a. Prior to testing, examine ORB entries relating to maintenance done to the unit.

b. While testing the OCM, examine the unit closely for indications of tampering, be aware that personnel can easily bypass or disable an OCM with very simple electrical modifications and adjustments of the electronic components that can affect the unit's sensitivity to accurately measure the oil content of the effluent.

c. Ensure the crew uses great care to prevent discharging unlawful quantities of oil.

d. The OCM must activate the alarm and close the overboard discharge valve and direct the discharge back to a tank or the bilge when the processed effluent exceeds 15 ppm of oil. Most OWS units have a sample valve located before the OCM where a sample can be drawn and visually checked; oily water typically produces a sheen at concentrations greater than 15 ppm.

e. Trace the OCM sample line to ensure it is coming from (sampling) the discharge side of the OWS. Verify there is no means to dilute the source sampling entering the OCM. Ensure that OCM fresh water flush valve, if provided, is closed when the OCM is sampling.

f. Always refer to the manufacturer's specified procedure or the vessel's written procedures for proper testing of the OCM. Never test the OCM using sticks, tea, coffee, or similar unorthodox methods.

g. When testing the OCM alarm, there may be up to a 20 second delay after the detection of excess oil in the OWS discharge before the alarm sounds and the overboard discharge control devices are activated. Refer to the manufacturer's technical manual to confirm the acceptable time delay.

---

8. Sludge Tank (Tank for Oil Residues)

a. The sludge tank stores oil residue, i.e. sludge or waste oil, which is left over from processing oily water through the OWS and from other sources like fuel oil and lube oil purifiers.

b. Determine the sludge tank level and the rate at which the ship generates sludge and whether the sludge tank has sufficient capacity to store waste oil generated by the ship's machinery operations during its next voyage.

c. In general, the quantity of fuel oil sludge produced should be equivalent to 1- 2 percent of the heavy fuel oil burned. For example, a vessel that burns 45 cubic meters (11,880 gallons) of fuel per day should develop between 450 to 900 liters (119 – 238 gallons) of oil and oily water each day.

d. Confirm that the sludge tank level is consistent with entries in the ORB. Ask a ship's engineer how the ship disposes of sludge, ashore or through incineration.

e. Review ORB entries and verify the method of sludge disposal is accurately documented. There may be several different tanks used to manage oily bilge water and sludge type wastes. Some sludge tanks are fitted with heating coils to

evaporate excess water. Accordingly, these tanks may contain less fluid than indicated in the ORB.

f. Incinerator (if installed on board). A properly functioning incinerator is an integral part of disposing sludge. Sludge and waste oil are generated from a properly operating OWS, from fuel and lube oil purification, and other main engine sources. Incinerators installed on or after January 1, 2000 must be approved by the flag Administration, based on IMO resolution MEPC.76 (40). Incinerators installed between March 26, 1998 and December 31, 1999, also requires IMO or class approval per IMO resolution MEPC. 59(33). Installations completed before March 26, 1998 need not be approved. Examine the ORB for quantities of sludge incineration; infrequent entries in the ORB for shore-side discharge of sludge may indicate that the incinerator is frequently used. An operational test of the incinerator may be necessary when conducting an expanded exam. During an expanded exam, PSCOs should—

(1) Verify that the crew can safely operate the installed incinerator per the manufacturer's instruction operations manual;

(2) Question the ship's crew on how much sludge the incinerator burns. If the crew claims that it is all burned, verify and compare the capacity of the incinerator against the ship's daily production of sludge. As discovered in recent MARPOL investigations, ORB entries documenting the quantities and methods for handling oily wastes are occasionally falsified. Investigators have learned that, in such cases, wastes are sometimes discharged overboard. Examination of the vessel's engineering log, specifically daily fuel consumption entries, will help verify the accuracy of the quantities expressed in the ORB; and

(3) Consult the manufacturer's operations manual for operating the incinerator and follow any relevant procedures provided. Regardless of the manufacturer's instructions, the PSCO may:

(a) Sound and note the level of the source tank. The tank should also be at the proper temperature and circulators, if fitted, should be operating.

(b) Verify the content of the source tank as sludge. Be aware that some investigators have identified the incinerator supply tanks as having been filled with clean diesel fuel to falsely give the impression of proper operation during testing of the equipment.

(c) Closely examine the firebox refractory. Fireboxes that are too clean with minimal deposits may indicate that the equipment is not regularly used. Alternatively, thick carbon deposits throughout the furnace area may indicate excessive heat and running the machine at too high or over

capacity. When the unit is used to burn solid wastes, ash and other debris may be indicated on the furnace floor. The waste oil nozzle should have some carbon deposits which are evidence of use.

(d) Make certain incinerators have gone through a warm-up stage and that the pre-sludge burning furnace temperatures have been reached prior to burning sludge.

(e) Once the proper warm-up temperatures are reached, ensure the incinerator burns sludge for 15-20 minutes and checks for a corresponding drop in the source tank. This drop in tank level is based on the size and configuration of the source tank, the burn rate of the incinerator, and the duration of the test, it may not be an appreciable amount, but the quantity should be measurable.

(f) Check the incinerator manual for the manufacturer's list of recommended spare parts inventory. If the ship has few or no spare parts on hand, or if the parts box appears untouched with very old parts in original packaging, it may indicate that the incinerator has not required significant maintenance and may reflect little usage. Review entries in the ORB and check for repairs or maintenance done to the equipment.

g. Standard discharge connection. Examine the standard discharge connection for evidence of use. The ORB should be reviewed for entries indicating shore-side discharge through the standard discharge connection. If the ORB indicates recent shore-side or barge discharges, then the crew should be able to produce the standard discharge connection quickly and it should show signs of recent use. In contrast, if the ORB indicates no shore-side discharge and the standard discharge connection shows signs of recent use such as a clean threaded valve stem, further investigation may be needed. Be concerned if you discover fittings like a hose barb that would allow a hose without a coupling to be slipped over a pipe section and attached to a flange, or a flange that adapts the discharge connection to a fire hose coupling. Some investigations have concluded a fire hose was used to pump oily waste and sludge directly overboard.

h. Procedures for conducting an expanded exam. Prior to expanding an exam of pollution prevention equipment and procedures, ensure that clear grounds exist to justify a more in depth exam. Clear grounds is defined by the IMO as evidence that the ship, its equipment, or its crew does not correspond substantially with the requirements of the relevant conventions or that the master or crew members are not familiar with essential shipboard procedures relating to the safety of ships or the prevention of pollution. Evidence of troublesome or problematic equipment operations or the appearance of the crewmember's inability to operate

the equipment correctly, is sufficient evidence to expand the MARPOL Annex I examination. The items listed below are just a few items that should be checked when conducting an expanded exam; Appendix 2 of the IMO Resolution A.1052(27), Procedures for Port State Control, contains guidance that should be reviewed before conducting an expanded exam.

(1) Verify that no electrical bypasses, jumpers, or extra switches are configured within the OCM unit; consult the OCM manual and wiring diagram for help in determining this.

(2) Verify that bilge piping matches approved OWS piping diagram to ensure no unauthorized modifications have been made. If illegal bypasses are suspected, the OWS discharge pipe should be opened. When inspecting the discharge pipe, some light oil residue may be present and considered normal since light residues of oil accumulate in the pipe over time. On the other hand, excessive quantities of oil or build-up of sludge requires further investigation.

(3) Be vigilant for unauthorized bypasses when malfunctioning OWS equipment is found. Bypasses do not always directly involve the OWS overboard skin valve, many creative means have been used to bypass OWS systems, for example, a bilge water bypass to overboard discharge for another system.

(4) Compare the ship's Safety Management System requirements for OWS preventative maintenance against actual maintenance conducted. Request proof/documentation of maintenance completed (check for consumables from OWS, receipts of service, technician reports, contractor disposal records, etc.).

(5) Review meter calibration records if available. Systems approved under MEPC.107(49) are required to have a seal on the bilge alarm, allowing the crew to only check instrument drift, repeatability and have the ability to re-zero the unit. Note: STCW does not require members of the crew to be competent in calibrating OWS equipment.

(6) Make note of any cleaning products in the engine room. Some cleaning products may emulsify the oil in the bilge water thereby preventing the OWS from properly operating, rendering it ineffective. Consult the OWS manual or other shipboard management policies for approved cleaning products.

(7) Ask the crewmembers, preferably not in the presence of the chief engineer, about if/when tank soundings are taken, from which tanks they are taken, and how they are recorded/transmitted. If the crew provides sounding logs, compare the entries to those recorded in the ORB for consistency.

9. U.S. Requirements Exceeding Those of MARPOL 73/78

a. When U.S. requirements exceed those of MARPOL 73/78, specific examination of these features must be conducted by the PSCO.

(1) The U.S. requirements that exceed those of MARPOL 73/78 include--

(2) The containment requirements in 33 CFR 155.310;

(3) The requirements for the reduced optional period for the use of Clean Ballast Tank (CBT) in lieu of Segregated Ballast Tank (SBT) or Crude Oil Washing (COW) on certain crude oil tankers in 33 CFR 157.10a; and

(4) The 33 CFR Part 157 requirements for SBT, CBT, and COW on existing tankers of 20,000 to 40,000 DWT that are 15 years old or more. These requirements went into effect on 1 January 1986 under Section 5(7)(E) and (H) of the Port and Tanker Safety Act of 1978 (46 U.S.C. 3705 and 3706).

---

10. Damage Stability

a. Proper loading of a ship is essential for safety and to prevent the occurrence of oil spill disasters. Regulation 28 of MARPOL 73/78 contains the requirements for damage stability. The review of damage stability requirements should be conducted during the annual foreign tanker examination and during other exams, such as those for monitoring transfer operations.

b. Exams to monitor transfer operations are to verify that the ship has the proper stability information on board and is loaded in accordance with the approved stability information.

c. Regulation 28 of MARPOL 73/78 requires a ship to have information that allows the damage stability of a tanker to be assessed under conditions the same as or similar to those under which the tanker is expected to operate.

d. IMO determined that only the full load condition and a limited number of partial load conditions needed to be evaluated for approval and kept available to the master. Additional partial loading conditions should be evaluated depending upon the ship's operational needs.

e. The United States does not accept this interpretation because the partial load conditions provided may be less severe than the ship's actual operating conditions while in U.S. waters. As a result, the United States requires new ships that are oil

tankers to have approved stability information on board for the loading conditions under which they are operating while in U.S. waters.

FIGURE E1-5 To Be Added Later in Electronic Version

FIGURE E1-6 To Be Added Later in Electronic Version

f. Damage stability requirements. All new oil tankers must have damage stability information on board to permit the master to load the ship in a manner to resist damage and minimize oil pollution in case of grounding or collision (Annex I, Regulation 28 of MARPOL 73/78). At the time of their construction, U.S. flag ships are provided with Coast Guard-approved stability information to comply with 33 CFR Part 157. These requirements meet or exceed those in MARPOL 73/78. Damage stability information for U.S. ships is normally found in either the ship's trim and stability booklet or the ship's loading booklet, sometimes referred to as the loading manual. Foreign ships will have stability information in similar documents.

(1) Trim and stability booklet. From the information in this booklet, the master or chief mate prepares a calculation for the stability for each full or partial loading condition of the ship. The trim and stability booklet typically contains the following information:

(a) General description and light-ship data.

(b) Instructions for calculating draft, trim and the center of gravity (KG).

(c) Tank capacity tables.

(d) Table of hydrostatic properties for the range of operating drafts, which are used to develop the loading conditions.

(e) Curve or table of allowable center of gravity (KG) or required metacentric height (GM) versus draft.

(f) Blank calculation forms.

g. Loading booklet (loading manual). The loading booklet provides the master with a limited number of pre-calculated full and partial loading conditions for departure and arrival. Each condition will be a separate page in the booklet and will show either the amount of cargo or the percentage (0 percent, 50 percent, 75 percent, 98 percent) of cargo in each tank for that loading condition.

h. Damage stability exam procedures. Determining whether a ship is properly loaded and has proper damage stability information is difficult, since stability information is highly technical, provided in several acceptable forms, and is usually in the language of the ship's flag state. PSCOs must use all of their skills in communication and observation, as well as common sense and judgment, in determining whether a ship's damage stability information is adequate and whether the ship is correctly loaded. To determine whether a ship complies with the MARPOL 73/78 damage stability requirements, the following procedures should be used when evaluating a ships loading condition:

(1) Record the forward, midships (if available), and after drafts observed when boarding the ship. If a midship draft is not available, calculate the mean draft by averaging the forward and after drafts. The difference between the forward and after drafts is the vessel’s trim.

(2) Ask the master to describe how the vessel’s cargo tanks were loaded upon port entry, prior to commencing transfer operations, in terms of percent of the tank full (e.g., fully loaded, #1 tanks full, #2 tanks at 60 percent, etc.). Record the fill percentages of each of the cargo tanks. It is particularly important to note which cargo tanks are partially full, especially cargo wing tanks, since they affect stability to a greater extent than other loaded tanks.

(3) Ask the master or the cargo loading officer for the ship's trim and stability booklet or loading booklet (loading manual). If the ship has no stability information, this is a major design deficiency, and the enforcement actions in the Marine Safety Manual, Volume I, Administration and Management, COMDTINST M16000.6 (series), Chapter 4, for a major design deficiency should be followed.

(a) If presented with the trim and stability booklet, ask the ship's officer to show you the loading condition calculations. Record the forward, after, and mean drafts calculated and the percentage fill of each cargo tank for that loading condition.

(b) If presented with the stability booklet (loading manual), ask the ship's officer to show you the specific page with the calculations that were followed for the ship's loading condition. Record the forward, after, and mean drafts and the percentage fill of each cargo tank from this page.

(4) Compare the master’s cargo tank levels and the observed drafts to the cargo tank levels and drafts recorded in the ship's trim and stability or loading booklet. Record any cargo tank levels that do not agree within 5 percent. Also record if the mean observed draft does not agree with the calculated mean draft

to within 4 inches, and record if the observed trim does not agree with the calculated trim to within 12 inches.

(5) Ask the ship's officer to explain any differences greater than those indicated in the preceding paragraph. PSCOs must understand that considerable differences between observed drafts and the ship's calculated drafts may occur when the ship is in the process of loading or unloading cargo as compared to the fully loaded or completely ballasted conditions. Differences between the drafts observed or given by a ship's officer and those calculated could also be due to hog or sag conditions; fuel consumed; inaccuracies in reading the draft marks due to weather or the ship's position at the dock; water density; and the different reference points from which draft marks may be measured.

(6) If the explanation for differences noted between observed and recorded cargo tank levels and mean draft and trim is unsatisfactory, ask the ship's officer to verify the present level in several of the cargo tanks and compare them to the cargo tank levels listed in the stability booklets for the applicable loading condition.

(a) Partially loaded cargo tanks should be checked first. The tank levels may be obtained from soundings, reading ullages, or reading tank level indicators.

(b) There may be large variations in tank levels due to transfer operations. Unexplained variations of 5 percent or more between the present tank loading level and the tank level used for calculations or listed in the trim and stability booklet or the loading booklet are an indication the ship has a major operational deficiency. The PSCO then should contact the OCMI for direction as to the corrective action that should be taken as well as the enforcement actions to take as indicated in the Marine Safety Manual, Volume I, Administration and Management, COMDTINST M16000.6 (series), Chapter 4 for a major operational deficiency.

---

11. Procedures for detaining under MARPOL Annex I.

a. When a PSCO determines that a ship or its crew presents an unreasonable threat to the environment an intervention leading to a detention should take place.

b. Examples of MARPOL Annex I detainable deficiencies can be found in IMO Resolution A.1052(27), Procedures for Port State Control, and include absence, serious deterioration or failure of proper operation of; the oily-water filtering equipment, the oil discharge monitoring and control system or the 15ppm alarm arrangements; remaining capacity of slop and/or sludge tanks insufficient for the

intended voyage; excessive oily water in the bilge; oil record book not available; unauthorized discharge bypass fitted; failure to meet damage stability and loading requirements.

c. PSCOs should follow the specific procedures for notifying and reporting detentions contained in NVIC 06-03. Deficiencies reported on Port State Control Report of Inspection, Form CG-5437B need to be as specific as possible. The report should describe the MARPOL standard the ship does not meet, and details on specifically how the ship fails to meet the standard. A clearly articulated detention report facilitates the review process and reflects positively on the investigative process and subsequent enforcement measures. Some MARPOL Annex I detentions coincide with civil penalty action and/or criminal investigations.

d. Initiating a MARPOL Annex I investigation. When a PSCO suspects that a civil or criminal violation has taken place, it is imperative that a thorough investigation of potential violations takes place. A prompt and coordinated investigation is crucial. For procedures to ensure all enforcement options are protected when conducting an investigation, refer to the Maritime Law Enforcement Manual, COMDTINST M16247.1 (series) and MSM Volume V, Investigations and Enforcement, COMDTINST M16000.10A (series).

---

12. Investigations into Alleged Discharge Violations

a. Exams conducted as a result of a reported oil sighting require a thorough review of the ORB, monitor continuous recordings, pollution prevention equipment operation, and ship spaces together with interviews of the ship's personnel to determine whether the suspected ship discharged in violation of MARPOL 73/78.

b. Enforcement guidance for MARPOL Annex I discharge violations is provided in the MSM Volume I, Administration and Management, COMDTINST M16000.6 (series), Chapter 4.

(1) Discharge requirements. All ships must comply with the discharge limitations described in the following sections. A summary of the discharge requirements for MARPOL 73/78 is provided as Figures E1-5 and E1-6. All unauthorized discharges must be reported without delay as stated in 33 CFR 153.203 and 33 CFR 151.15.

(2) U.S. territorial sea. The Federal Water Pollution Control Act (FWPCA) prohibits the discharge of oil in a "quantity which may be harmful" into the

navigable waters of the United States, which includes the territorial sea (0 to 12 nautical miles (nm) offshore).

(3) Under the FWPCA, the EPA has defined a "quantity which may be harmful" as one which forms a sheen, sludge, film or emulsion (40 CFR Part 110). Therefore, any discharge in the territorial sea that creates a sheen is a violation of the FWPCA even if it is allowed by MARPOL 73/78.

(4) If a discharge is greater than 15 parts per million (ppm), it is also a violation of MARPOL 73/78.

(5) U.S. contiguous zone. The U.S. contiguous zone is the area between 12 and 24 nm offshore as measured from the baseline from which the territorial sea is measured.

(6) In the contiguous zone, oil discharges are restricted by the FWPCA and MARPOL 73/78.

(7) The FWPCA prohibits discharge of oil in a quantity that may be harmful, as defined in 40 CFR Part 110 (one which forms a sheen, sludge, film or emulsion), but excludes discharges permitted by MARPOL 73/78.

(8) MARPOL 73/78 permits discharges, while underway, from machinery space bilges and oil fuel tanks in concentrations of less than 15 ppm when the ship has an approved oily-water separator (33 CFR 151.10), and monitor or alarm system in operation (33 CFR 155). Discharges in the contiguous zone in compliance with MARPOL 73/78 restrictions are not a violation of the FWPCA, even if a sheen results. Under most conditions, discharges of 15 ppm should not produce a sheen.

(9) Discharges beyond the contiguous zone. Beyond the contiguous zone, discharges of oil are presently limited only by MARPOL 73/78, except for discharges associated with outer continental shelf drilling operations, which are governed by National Pollution Discharge Elimination System (NPDES) permits issued by the EPA (40 CFR 435).

(10) Discharges from machinery space bilges and fuel tanks. MARPOL 73/78 permits discharges from machinery space bilges and oil fuel tanks in concentrations of less than 100 ppm when the following are true:

(a) The ship is proceeding en route.

(b) The ship is not within a special area (see Figure E1-6).

(c) The ship is more than 12 nm from the nearest land, and is operating an approved oily-water separator and, for ships of 10,000 GT and above, an approved bilge monitor or alarm system (33 CFR 151.10 and MARPOL 73/78 Annex I, Regulations 14 and 15).

(11) Discharges from tanker cargo tanks and cargo pump room bilges. 33 CFR 157.37 permits discharges of oil from cargo tanks and cargo pump room bilges only when all of the following conditions are met:

(a) The tanker is not within a special area.

(b) The tanker is more than 50 nm from the nearest land.

(c) The tanker is proceeding en route.

(d) The instantaneous rate of discharge of oil content does not exceed 30 liters per nautical mile.

(e) The total quantity of oil discharged into the sea does not exceed the following:

i. For existing tankers: 1/15,000 of the total quantity of the particular cargo of which the residue formed a part.

ii. For new tankers: 1/30,000 of the total quantity of the particular cargo of which the residue formed a part.

(f) The tanker has in operation, except as allowed in 33 CFR 157.08(i), an approved oil discharge monitoring and control system.

(12) Fixed and floating drilling rigs and other platforms. There are no additional equipment requirements or discharge limitations on fixed and floating drilling rigs and other platforms which are operating under a valid NPDES permit in accordance with section 402 of the FWPCA, as amended and with 40 CFR Chapter I. When not operating under a permit, the MARPOL 73/78 oil discharge limitations in 33 CFR 151.10 are fully applicable. Compliance with an NPDES permit is a fully satisfactory alternative to compliance with the requirements of MARPOL 73/78.

(13) Alleged discharge violation investigation procedures. The following procedures should be followed when boarding a ship to investigate an alleged discharge violation:

(a) Inform the ship's master that his or her ship is suspected of discharging oil in violation of MARPOL 73/78 and/or APPS.

(b) Review the IOPP certification for validity and to determine what pollution prevention equipment is on board.

(c) Review the discharge entries in the ORB for the period of the suspected unauthorized discharge to determine if the ship legally discharged at the time and in the location of the reported sighting.

(d) Review the continuous records from automatic recording devices, if the ship is equipped with these devices, for the period of the suspected unauthorized discharge to determine if the ship met the requirements for the concentration and the total amount of oil discharged.

(e) Compare the continuous records, as appropriate, to the ORB entries to see if they correspond.

(f) Check whether, for the voyage in question, sufficient time elapsed for the ship to have deballasted through the cargo monitor considering the monitor's capacity and the time period logged in the ORB.

(g) Check that the ORB is not missing any entries that should have been made during a particular voyage or in connection with other associated transfer operations.

(h) Check the operation of pollution prevention equipment i.e., oily-water separators, monitors, and alarms, if there is reason to suspect any malfunction.

(i) Check the sequence of oil transfers in the ORB for discrepancies.

(j) If pages of the ORB are required for evidence, make copies of the ORB pages and have the (master certify they are true copies.)

(k) Tour the ship's spaces and look for signs of oil discharge.

(l) Interview ship personnel concerning the ship's operations on the date(s) in question.

FIGURE E1-1: MARPOL ANNEX I BOARDING CHECKLIST

1. Review IOPP Certificate.
   - Is certificate valid?
   - Does vessel name and registry match certificate?
   - Is equipment required in Form A or Form B on board and functioning?
   - Are there any outstanding Notices of Merchant Marine Inspection Requirements (CG-835) or deficiencies indicated in MISLE?
   - Are any "equivalents" listed in Section 7 of Form A or Section 10 of Form B acceptable to the U.S.?

2. Review Oil Record Book.
   - Does vessel maintain required Oil Record Books? (All ships Part I, Oil Tankers Parts and II)
   - Has each entry been signed by the officer in charge and each page signed by the master?
   - Are oil transfer entries in the proper format?
   - Verify location and concentration of last discharge entry.
   - Review for the last voyage all expected entries such as tank cleaning, ballasting and deballasting.

3. Monitor Continuous Record Review.
   - Does vessel have available on board the continuous records for: the past year for cargo records and the past three years for machinery bilge space records?
   - Were the date, time and concentration of discharges from the most recent voyage recorded in the continuous record (Oil Record Book)?
   - Verify that the location and concentration of the last discharge are authorized.
   - Compare the last discharge recorded with the companion entry in the Oil Record Book.
   - Did vessel arrive in ballast and deballast while in port? Do the deballasting entries in Oil Record Book correspond to monitor recording?
   - If monitor is inoperative, does Oil Record Book indicate the problem and any corrective actions?
   - Do entries match equipment listed on IOPP Certificate?

4. Damage Stability Information Review.
   - Record forward, midships and after drafts you observe when boarding the ship.
   - Ask the master to describe loading of the cargo tanks in terms of percent of tank full.
   - Review the vessel's Trim and Stability Booklet (Loading Manual). If there is no stability Information available, this is considered a major deficiency.

- Compare the cargo tank levels given by the master and the observed drafts to those obtained from the Trim and Stability Booklet or Loading Booklet.
- Ask the ship's officer to explain any discrepancies.

NOTE: ANY DISCREPANCIES NOTED SHOULD INITIATE A MORE THOROUGH REVIEW AS DESCRIBED IN MSM VOLUME II, MATERIAL INSPECTION, COMDTINST M16000.7A (SERIES), CHAPTER E1.

E. MARPOL 73/78 ANNEX II BOARDING GUIDANCE AND PROCEDURES

OCMIs should incorporate review of MARPOL Annex II requirements when conducting compliance exams and when monitoring cargo operations aboard ships carrying Noxious Liquid Substances (NLSs) in bulk. Emphasis should be placed on cargo transfer and waste discharge related records and operational requirements as recorded in the Cargo Record Book (CRB) and described in the ship's Procedures and Arrangements Manual (P&A Manual). Certificates must be reviewed for validity.

Note: The information contained in the section has not been updated to reflect the most recent amendments to Annex II and the International Code for the Construction and Equipment of Ships Carrying Dangerous Chemicals in Bulk (IBC Code) that went into force January 1, 2007. These amendments changed the NLS categories from (old) A, B, C, etc., to (new) X, Y, Z and OS. Old and new categories are referenced below.

Refer to NVIC 03-06 for applicability to U.S vessels and to clarify any inconsistencies between the revised Annex II and U.S. law and regulations. Foreign flagged vessels operating in the U.S. must comply with existing U.S laws which may be more stringent than required by Annex II. When conducting U.S vessel inspection activities, replace PSCO with Marine Inspector. During exams of vessels carrying NLSs, PSCOs must ensure the following:

(1) That the ship has an approved P&A Manual.

(2) That the ship properly maintains a CRB.

(3) That the ship carries NLS in approved tanks.

(4) That the ship has properly stripped cargo tanks and cleared transfer lines.

(5) That the ship has correctly discharged NLS waste to the sea.

(6) That the ship has correctly prewashed tanks and discharged the NLS waste to an adequate reception facility.

(7) That the ship has the required certificates.

NOTE: PSCOs may use MARPOL Annex II Boarding Checklist provided in Figure E1-7 to aid in a MARPOL Annex II compliance check. Enforcement guidance for Annex II violations is provided in the MSM Volume I, Administration and Management, COMDTINST M16000.6 (series), Chapter 4.

---

1. Applicability

a. Annex II of MARPOL 73/78 applies to oceangoing ships carrying NLS in bulk. The regulations implementing MARPOL Annex II requirements pertaining to the various types of ships are as follows:

(1) Tankships and tank barges carrying oil-like NLS under 33 CFR Part 151.

(2) Offshore supply vessels under 46 CFR Part 98.

(3) Chemical tank barges carrying certain Category D NLS under 46 CFR Part 151.

(4) Chemical tankships and tank barges under 46 CFR Part 153.

b. The regulations do not apply to--

(1) A tank barge on a limited short protected coastwise voyage whose COI is endorsed for such a route; or

(2) Fixed or floating drilling rigs or other offshore platforms, unless they carry NLS as bulk cargo. (If these ships were designed for carrying NLS cargo in bulk they would be treated as chemical tankers.)

c. When an oil cargo and NLS cargo are carried on the same ship, the provisions and appropriate requirements of MARPOL 73/78 Annex I and Annex II apply.

---

2. Document Requirements

a. There are several certificates and manuals that a ship must have and maintain to carry NLS in bulk. The documents required depend upon the vessel's service, the NLS and other cargoes it carries, where it operates, whether the ship's flag state is a Party to MARPOL 73/78, and whether the ship must meet the International Bulk Chemical Code or the Bulk Chemical Code. (See also NVIC 06-03).

b. A ship carrying NLS in bulk must have its certificates readily available for inspection. Photocopies are not acceptable. A certificate must have its expiration date and a signature from an authorized issuing authority; e.g., flag administration, recognized organization. A certificate that has been altered is not acceptable.

c. If the vessel is operating under an alternative or waiver, the document or endorsement indicating such must be on or attached to the certificate. For the addition of new cargoes, a fax from Commandant (CG-OES-3) attached to the certificate is acceptable.

d. U.S. ships, Party ships, and non-Party ships calling on U.S. ports are examined by marine safety personnel. If the ship is found in compliance with Annex II, it will be issued or must maintain one or more of the following documents as indicated in Figure E1-8. The applicable documents must be available for inspection by Coast Guard personnel. The following paragraphs further describe these documents and the requirements.

e. For a Party ship, the Certificate of Compliance (COC) is valid for two years as long as the ship has a valid International Certificate of Fitness (ICF), Certificate of Fitness (COF) or NLS certificate. The COC expiration is not affected by reissuance of the COF or NLS certificate. For the purpose of this chapter, the terms ICF and COF are considered interchangeable. Both terms are explained in paragraphs c and d below.

FIGURE E1-7: MARPOL ANNEX II EXAM CHECKLIST

1. Review vessel documentation.

   - Does the vessel have all required documents? (Refer to Figure E1-8 of MSM Volume II, Material Inspection, COMDTINST M16000.7A (series))
   - Does vessel name and registry match all documents?
   - Verify that the Noxious Liquid Substance (NLS) cargoes on board are authorized by the certificate and are listed on the cargo manifest.

2. Review P&A Manual (if required).

   - Is P&A Manual approved by vessel's flag Administration or the Coast Guard for U.S. and non-Party vessels?
   - Is the P&A Manual in the format prescribed in Appendix 4 of Annex II?

3. Review Cargo Record Book (if required).

   - Is vessel using the correct version of the Cargo Record Book?
   - Has each entry been signed by the officer in charge and each completed page signed by the master?
   - Was the last cargo unloading operation in compliance with Annex II and U.S. regulations?
   - For potentially solidifying or high viscosity NLS, was a prewash required and carried out properly? If a prewash waiver was issued, was the Cargo Record Book signed by a surveyor or government official?
   - For the last voyage, did the vessel discharge any NLS residue? If so, did the vessel meet all discharge restrictions? (Refer to Figures E1-10 and E1-11 of MSM Volume II.)

4. Review monitoring equipment (if required).

   - Compare recorded discharges to the entries in the Cargo Record Book.
   - Is the record signed by the officer in charge?
   - If monitor is inoperative, does Cargo Record Book indicate the problem and any corrective action?

5. If possible, monitor NLS cargo loading, unloading, stripping and line clearing operations.

   - Determine name and category of the NLS cargo.
   - Determine if the cargo tank is approved for carriage of the NLS.

- Review the Cargo Record Book to determine if there are any problems with any of the equipment (i.e., stripping, temperature sensing systems, cargo pumps, etc.).
- For potentially solidifying or high viscosity Category B (Y) NLSs, determine the temperature at which the cargo must be transferred so as not to require an in-port prewash.
- Ensure that stripping operations are carried out according to the requirements in the vessel's P&A Manual.
- If an in-port prewash is required, follow the procedures in the MSM Volume II, E1.E.7.
- Verify that cargo transfer hoses are not drained back to the ship after unloading an NLS cargo.

NOTE: ANY DISCREPANCIES NOTED SHOULD INITIATE A MORE THOROUGH REVIEW AS DESCRIBED IN VOLUME II, CHAPTER E1.

f. COI. This certificate is issued to U.S. ships under 46 CFR Subchapters “D and O” or “I and O” and carries endorsements for the carriage of specific NLS cargoes for each cargo tank.

(1) The OCMI issues a COI after the ship has had a satisfactory inspection.

(2) The Coast Guard is responsible for issuing this certificate in accordance with 46 CFR Parts 30-40 and 153.

(3) The specific endorsements and conditions for MARPOL Annex II requirements on the COI come from 33 CFR Parts 151 and 157 and 46 CFR Parts 98, 151, 153 and 172. These endorsements and conditions and have the same force and effect as the regulations requiring them. Each COI is endorsed according to individual tanks to show which NLSs can be carried and where they may be carried on the ship.

g. Certificate of Compliance (COC), Form CG-3585. This certificate is issued to foreign ships trading in U.S. waters with NLS cargoes onboard after completion of a satisfactory exam.

(1) The OCMI issues a COC if a ship has a valid International Certificate of Fitness (ICF) or Certificate of Fitness (COF) issued by a Party signatory to Annex II of MARPOL 73/78. The signature of the OCMI on the COC serves as the cargo endorsement required by 46 CFR 153.900.

(2) Non-Party ships may not have an ICF or COF but must be examined for a COC under U.S. regulations. In most cases, the Marine Safety Center (MSC) reviews a vessel's "non-Party" ICF or COF and the vessel's P&A manual to verify compliance with the applicable requirements.

(3) In addition to a COC, Foreign Gas Carriers subject to 46 CFR 154 are required to be issued a Subchapter “O” Endorsement (SOE). The MSC will prepare and upload the SOE into MISLE for printing and issuance by the OCMI with the COC. The SOE will list the Annex II NLS cargoes authorized for carriage in U.S. waters..

h. ICFs for the Carriage of Dangerous Chemicals in Bulk. This certificate is issued by Party nations under the International Bulk Chemical Code (IBC), as adopted under Resolution Resolutions MSC.176(79) and MEPC.119(52), to their oceangoing ships built after 30 June 1986.

(1) Ships built prior to 1 July 1986 may elect to hold the ICF in lieu of the COF.

(2) The ICF is required on oceangoing chemical tankers on foreign voyages and on oceangoing tank barges when in the waters of a Party nation. A U.S. or foreign Party ship on an international voyage must have either an ICF or COF according to when the vessel was built.

(3) U.S. ships on domestic, oceangoing voyages do not require an ICF.

i. COF for the Carriage of Dangerous Chemicals in Bulk. This certificate is issued by Party nations under the Bulk Chemical Code (BCH), as adopted under Resolution MEPC.144(54), to their oceangoing ships which were built before 1 July 1986. The COF is required for oceangoing chemical ships on foreign voyages and oceangoing tank barges when in the waters of a Party nation. A U.S. or foreign Party ship on an international voyage must have either an ICF or COF, according to when the vessel was built. U.S. ships on domestic oceangoing voyages do not require a COF.

j. International Pollution Prevention Certificate for the Carriage of Noxious Liquid Substances in Bulk (NLS Certificate). This certificate is issued to oceangoing ships carrying only certain Category Z NLS, listed in the chapter 18 of the IBC.

k. Vessels carrying only cargoes classified as OS do not require a certificate under Annex II, however vessels authorized t carry NLS cargoes but carrying OS cargoes must be examined to the applicable NLS carriage requirements.

(1) Ships carrying oil-like Category D NLS cargoes in bulk may, as an alternative, be issued an International Oil Pollution Prevention Certificate by Party nations.

(2) Party oil tankers, offshore supply vessels and non-self-propelled vessels carrying Category D NLS cargoes in bulk, which do not have a COC and ICF or COF, are required to have an NLS Certificate when calling on U.S. ports.

(3) Non-Party ships which do not have an endorsed COC must have a letter issued by Commanding Officer, MSC, indicating compliance with the relevant MARPOL Annex II requirements.

(a) International Oil Pollution Prevention (IOPP) Certificate with Form B Supplement Attachment (CG-CPE). This attachment is issued to ships that can carry oil-like Category C or D NLS as oil under the requirements of Annex I of MARPOL 73/78. U.S., Party, and non-Party oil tankers which decide to carry oil-like Category C or D NLS as oils under Annex I of MARPOL 73/78 are required to have an IOPP Form B supplement endorsed for the NLS cargoes.

l. Procedures and Arrangements Manual (P&A Manual). This document is approved by the Flag Administration and describes, in detail, the procedures for NLS cargo carriage, tank-to-tank transfers, cargo loading, unloading, stripping operations, and tank prewashing and ventilation procedures. The standard format of the P & A Manual is specified in Appendix 4 of Annex II of MARPOL 73/78

(1) U.S. and foreign ships must have an approved P&A Manual available on board the ship for inspection by Coast Guard personnel.

(2) The Coast Guard approves P&A Manuals for U.S. and conditionally approves them for non-Party ships. Party Administrations approve the P&A Manuals for their ships. The approval will be evident by a stamp and signature of the approving official of an authorized agency of the flag Administration on the cover of the P&A Manual.

(3) The P&A Manual requirement is waived for ships carrying NLS cargo in dedicated tanks, OSVs that cannot discharge NLS to the sea, and ships carrying oil-like Category C or D NLS as an oil under MARPOL Annex I.

(4) The P&A Manual is not required for some U.S. vessels which discharge all residues to shore reception facilities. A statement on the COI would indicate this exception.

m. Cargo Record Book (CRB). This document is required on board every ship carrying NLS in bulk. The CRB is used to record internal and external transfers and discharges of NLS cargo or waste, information concerning inoperative cargo transfer, tank cleaning and pollution prevention equipment, actions by surveyors, and any other cargo or waste related activities. The form of the CRB is specified in Appendix 2 of Annex II of MARPOL 73/78. Specific requirements for U.S., Party and non-Party ships are as follows:

(1) U.S. ships. U.S. ships are required to obtain and maintain the U.S. version of the CRB from the Superintendent of Documents, Government Printing Office, Washington, D.C., 20402. (Sales stock number 050-012-00233-9).

(2) Party ships. Party ships are required to use their country's version of the CRB or have a CRB as specified in Appendix 2 of Annex II of MARPOL 73/78.

(3) Non-Party ships. Non-Party ships are required to have on board and maintain a CRB. These ships may use the U.S. version or another version as specified in Appendix 2 of Annex II of MARPOL 73/78.

(4) Format. The CRB follows an internationally accepted format to record transfer operations in chronological order by coded and numbered entries. An improperly kept CRB may be used as evidence against a ship suspected of an illegal NLS discharge, while a correctly maintained record could establish a successful defense against an alleged violation.

(5) Maintenance. The ship's master is responsible for properly maintaining the CRB and for ensuring its availability on board the ship for review. The officer(s) in charge is required to sign the log for each completed operation and the ship's master must countersign each completed page. Ships must keep the CRB on board for a period of 3 years after the date of the last entry.

n. MARPOL 73/78 Annex II vessel document requirements (Figure E1-8). This figure contains a list of the various combinations of certificates and documents required by Annex II and U.S. law for U.S. ships in U.S. waters. If there is an "or" after the certificate code, it means the ship may hold one or the other of the certificates, but not both.

3. Document Review Procedures

a. Certificates. PSCOs must determine if the certificate is valid by--

(1) Comparing the name and the registry of the ship on the front of the certificate to the ship's name and flag;

FIGURE E1-8 To Be Added Later in Electronic Version

(2) Checking the certificate for the timely completion of required surveys and the proper recording of the entries, if appropriate;

(3) Verifying that the NLS cargoes on board are authorized for carriage by the certificate and endorsement in the tanks where stowed and are listed on the cargo manifest for the current voyage; and

(4) Checking the certification date, expiration date, and signature of the issuing authority on the certificate or endorsement to determine if the certificate is valid. If the certificate appears to be invalid, the PSCO should contact the OCMI, for further instructions. For the ICF and COF, the PSCO should also check that--

(a) The ICF is issued under Resolutions MSC.176(79) and MEPC.119(52); ii. The COF is issued under Resolution MEPC.144(54)); or

(b) For non-Party vessels, the ICF or COF is the same certificate submitted to the MSC during plan review.

b. P&A Manual boarding procedures. The P&A Manual is an extremely important document, since it gives the detailed procedures for the ship to perform all transfer and tank cleaning operations. PSCOs should do the following:

(1) Check that the P&A Manual is on board and is approved by the ship's flag Administration or the Coast Guard for U.S. and non-Party ships.

(2) Check that the P&A Manual is in the format prescribed in Annex II Appendix 4. Also check that the P&A Manual has procedures for the operations the ship has most recently performed, i.e., ventilating, prewashing, etc. More specific review procedures are provided in other sections pertaining to cargo transfers and the prewashing of cargo tanks.

c. CRB. The ship's CRB should be reviewed each time a ship is examined to ensure that the ship's personnel are properly recording NLS transfers and discharges, that

discharges of waste into the sea are correctly performed, that equipment failures are logged and that mandatory prewash activities are conducted and the prewash slops discharged to an adequate reception facility. Because of the chronological and numerical entries, PSCOs should be able to determine if the CRB has been properly maintained and the necessary entries have been made. PSCOs should do the following:

(1) Check whether the ship is using the correct version of the CRB.

(2) Check entries in the CRB for the signature of the officer(s) in charge for each entry and the master for each completed page.

(3) Check the last cargo unloading operation for compliance with Annex II and U.S. regulations.

(a) Determine the name and category of the NLS unloaded.

(b) Determine whether the NLS unloaded is potentially solidifying and/or high viscosity (see E.7 of this Chapter, and MARPOL Annex II Prewash and Prewash Surveyor Guidance and Procedures).

(c) For non-solidifying or non-high viscosity NLS, determine if stripping was accomplished in accordance with the P&A Manual.

(4) For potentially solidifying or high viscosity NLS, determine--

(a) The temperature of the cargo during unloading;

(b) Whether a prewash was required;

(c) If the required prewash was properly conducted;

(d) If the prewash slops were discharged to an adequate reception facility;

(e) If a surveyor was present to witness the prewash;

(f) If a waiver was issued to backload a compatible cargo, and, if so, that the correct cargo was backloaded;

(g) If a waiver was issued to allow prewashing in another port, and, if so, that the ship did not ballast or wash tanks while en route, that the prewash was conducted in the other port, and that the slops were discharged to an adequate reception facility; and

(h) For waivers, that a surveyor or government official signed the CRB to allow the waiver.

(5) For the last voyage, check if the ship discharged at sea.

(a) Check if the NLS residue discharged is allowed to be discharged.

(b) Check if the ship met the restrictions for the discharge of the category of NLS waste as outlined in Figures E1-10 and E1-11 of this Section.

(c) Check output from the discharge recorder for ships operating under the interim standards and discharging Category B NLS waste. If a ship carries oil-like Category C or D NLS under its IOPP Certificate, the ORB must have an entry showing that the ship's monitors have been adjusted to measure the oil-like Category C or D NLS.

---

4. Recording Equipment

a. Requirements. Ships that carry Category B NLS, were built before July 1, 1986, and operate under the interim standards are required to have recording equipment that is capable of automatically recording the time and date of the beginning and end of a discharge and the flow rate, when appropriate, of the discharge as prescribed in 46 CFR 153.481. See 46 CFR 153.1130 for procedures to follow in the event of failure of this equipment.

b. Inspection procedures. To ensure the proper operation of the required recording equipment, the PSCO should check--

(1) The times that discharges were recorded compared to the records in the CRB;

(2) The flow rate of the discharge, when required to be recorded;

(3) That the entries were made correctly;

(4) That the record was signed by the person in charge; and

(5) That failures of recording device were logged in the CRB.

---

5. NLS Cargo Monitoring Procedures

a. Depending on the operations in progress when the PSCO arrives, the PSCO should monitor part or all of the cargo loading, unloading, stripping, and line clearing operations using the information in the ship's P&A Manual.

b. The PSCO should also observe prewash operations if these are being conducted, and observe third-party prewash surveyors if they are verifying the prewash operations. The requirements for surveyor duties during prewashes are provided in E.7 of this chapter.

c. Figure E1-9 outlines the stripping requirements for certain types of vessels handling certain types of cargoes. See NVIC 06-03 for additional information on the testing of stripping systems.

d. For ships carrying oil-like Category C or D NLS as oils, there is a requirement under 33 CFR 151.37 and 151.41 for a cargo discharge monitor that is designed to measure and record the NLS content of the oil-like cargo residues. The review procedures and enforcement guidance for this monitor are found in the Marine Safety Manual, Volume I, Chapter 4.

(1) NLS cargo loading monitor procedures. The following items should be reviewed when loading NLS cargo:

(a) Review the bill of lading or shipping papers to determine the name and category of the NLS being loaded.

(b) Find out, from the PIC, which the tank the NLS will be loaded into.

(c) Examine the P&A Manual and the appropriate certificates to determine if the NLS can be carried in the tank by.

(d) Verify other specific loading requirements are correctly performed as outlined in the P&A Manual.

e. NLS cargo unloading monitoring procedures. NLS unloading procedures must be correctly performed; otherwise, NLS residues in excess of the amounts permitted may be discharged at sea and cause harm to the marine environment.

(1) PSCOs should give special attention to stripping and line clearing operations in accordance with the procedures and requirements specified in sections 2 and 3 of the P&A Manual, as well as ensuring prewashes are conducted for Category (X) and solidifying or high viscosity Category (Y) and Z NLSs. The P&A

Manual should indicate the method and sequence for operation of the cargo and/or stripping pumps and associated equipment.

(2) The below items, as appropriate, should be reviewed during NLS unloading operations. If the P&A Manual does not contain complete information, copy the procedures in the P&A Manual and forward them to Commandant (CG-CVC) with the identity of the ship and any other problems encountered. The information in Paragraph E.5.b of this Chapter will normally be obtained during the ship's initial "efficient stripping test." Failure to conduct subsequent stripping and line clearing operations in accordance with the procedures specified in the ship's P&A Manual is likely to leave a greater amount of cargo in the tank than is indicated in the ship's P&A Manual. It may also result in exceeding the quantities permitted by the regulations. In such circumstances the ship may be required to conduct mandatory prewash operations and make arrangements to discharge the resulting prewash residue to an adequate reception facility, unless it can be established that the appropriate tank(s) and piping contain less NLS residue than by following the P&A Manual procedures. See Paragraph E.7.c of this Chapter.

(a) Determine the name and category of the NLS being unloaded by reviewing and comparing the cargo manifest, bill of lading, and CRB.

(b) Determine the tank to be unloaded by referring to the cargo manifest and bill of lading.

(c) Determine if the cargo tank is approved for carriage of the NLS by reviewing the P&A Manual and appropriate certificates.

(d) Review the CRB to determine if there are any problems with unloading equipment, i.e., stripping, temperature sensing systems, cargo pumps, etc.

(e) For potentially solidifying or high viscosity Category X or (Y) or Z NLSs, determine from the bill of lading or shipping papers the temperature at which the NLS cargo must be transferred so as not to require an in port prewash.

(f) Determine from the P&A Manual how and where to read the cargo unloading temperature.

(g) For potentially solidifying and high viscosity Category (Y) or Z NLS, verify the cargo unloading temperature and determine whether based upon the unloading temperature a prewash will be required.

FIGURE E1-9 To Be Added later in Electronic Version

(h) Review stripping operations by verifying that the following requirements are met as specified in the ship's P&A Manual:

i. List and trim.

ii. Time required for stripping.

iii. Minimum pump speed (or hydraulic supply pressure for hydraulically driven pumps).

iv. Minimum purge gas pressure and time required for purging (for hydraulically driven pumps utilizing column purging or purge pipe arrangements).

v. Minimum eductor supply pressure and time required for stripping (for ship utilizing stripping eductors).

vi. Minimum gas pressure and time needed to clear lines.

vii. If an in-port prewash is required, follow the procedures in E.7 of this chapter for verifying that the prewash is properly conducted and the slops are transferred to an adequate reception facility.

viii. Verify that cargo transfer hoses are not drained back to the ship.

---

6. Cargo Discharge Enforcement

a. Investigation of alleged NLS discharge violations may result from a number of events, including review of the ship's CRB; reports of discharge violations from individuals, companies, or other nations; or from aerial surveillance (if the NLS produces a sheen or discoloration of the water).

b. Discharge investigations require a thorough review of the ship's documents, logs, and certificates, particularly the ship's CRB and P&A Manual; inspection of the ship's spaces, and interviews of ship's personnel to determine if the ship's discharges are violations that therefore should be reported, without delay, as required by 46 CFR 153.1132.

(1) Discharge requirements. The discharge requirements for oceangoing ships carrying NLS in bulk are found in Regulation 13 of Annex II and in 46 CFR

153.1102, 153.1122, 153.1124, 153.1126, and 153.1128. Additionally, ships must comply with the stripping, prewashing, surveyor requirements, and associated waivers and exemptions, since a violation or non-compliance with these requirements may result in discharge of NLS residues in excess of authorized amounts. Figures E1-10 and E1-11 summarize the discharge requirements for NLS by category outside and inside Special Areas.

(a) All authorized discharges of Category X, Y, and Z NLS and ballast water, tank washings, and other residues or mixtures containing NLS must occur beyond the contiguous zone, i.e., greater than 12 nm offshore, and must be made through a suitably sized and approved discharge opening located on the bottom of the ship's hull near the keel.

(b) Oil-like Category Z NLS has the same discharge requirements as oils when carried as oils under 33 CFR Part 151. See E1.D of this Chapter for further discussion.

(c) CategoryX NLS outside of Special Areas. Discharges of Category A (X) NLS and ballast water, tank washings, and other residues or mixtures containing Category XNLS are prohibited (Regulation 13(1) of Annex II and 46 CFR 153.1128). The only exception to this rule is that after an in-port prewash is satisfactorily completed on a tank that held Category X NLS cargo, water added to the tank may be discharged to the sea under the conditions in Figure E1-10.

(d) Category Y NLS outside of Special Areas. Discharges of Category Y NLS and ballast water, tank washings and other residues or mixtures containing Category B NLS are prohibited, except when discharged in compliance with the restrictions in Figure E1-10.

(e) Category C NLS outside of Special Areas. Discharges of Category C NLS and ballast water, tank washings and other residues or mixtures containing Category C NLS are prohibited, except when discharged in compliance with the restrictions in figure E1-10.

(f) Category NLS outside of Special Areas. Discharges of Category D NLS and ballast water, tank washings and other residues or mixtures containing Category D NLS are prohibited except when diluted with water 10 to 1 and discharged in compliance with the restrictions in Figure E1-10 or discharged through an underwater discharge outlet. Water added subsequent dilution and discharged to the sea may be discharged without restriction.

(g) Category A NLS inside of Special Areas. The discharge requirements are the same as in Paragraph E.6.a of this Chapter, except that the discharge restrictions in Figure E1-11 apply.

(h) Category B NLS inside of Special Areas. Discharges of Category B NLS and ballast water, tank washings, and other residues or mixtures containing Category B NLS are prohibited. The only exception is after a prewash has been satisfactorily completed and these washings transferred ashore, the water added to the tank may be discharged to the sea under the conditions listed in Figure E1-11.

(i) Category C NLS inside of Special Areas. The discharge requirements are the same as in Paragraph E.6.a of this Chapter, except that the discharge restrictions in Figure E1-11 apply.

(j) Category D NLS inside of Special Areas. The discharge requirements are the same as in Paragraph E.6.a of this chapter, except that the discharge restrictions in Figure E1-11 apply.

(k) Uncategorized substances. Substances that have not been categorized or assigned a provisional category are prohibited from being carried in bulk. The discharge of these substances and ballast water, tank washings and other residues or mixtures containing these substances are prohibited.

(l) Non-harmful substances. Substances, ballast water, tank washings, and other residues or mixtures containing substances evaluated as non-harmful may be discharged without restriction. Non-harmful substances are indicated in 46 CFR Part 153, Table 1, by a “III” in the column titled "IMO Annex II pollution category."

(m) Fixed and floating drilling rigs and other platforms. If the rig or platform carries NLS cargo in bulk, it must comply with the discharge requirements in 46 CFR Part 153. For rigs and platforms that do not carry NLS in bulk as cargo, the discharge of NLS is prohibited, except when the fixed or floating drilling rig or other platform is operating under a valid NPDES permit in accordance with section 402 of the Clean Water Act, as amended and in accordance with 40 CFR Chapter I.

FIGURE E1-10: NLS DISCHARGE RESTRICTIONS OUTSIDE OF SPECIAL AREA DISCHARGE CRITERIA

Category A (X) is prohibited except—

1. Ship proceeding en route subsequent after a tank
2. **S**elf-propelled ship's speed 7 kts or prewashing satisfactorily greater; non-self-propelled ship's completed IAW 46 CFR 153 or speed 4 kts or greater Reg 13 of Annex II of MARPOL
3. Discharge is below the waterline is conducted
4. Discharge is further than 12 nm from nearest land.
5. Depth of water is 25 meters or more.

Category B*—

1. Ship proceeding en route.
2. Self-propelled ship's speed 7 kts or greater; non-self-propelled ship's speed 4 kts or greater.
3. Discharge is below the waterline.
4. Discharge procedures are approved in P&A Manual.
5. Discharge is greater than 12 nm from nearest land.
6. Depth of water is 25 meters or more.
7. Quantity of NLS discharged per tank is less than 1 m^3 or 1/3,000 of the tank's capacity

Category C*—

1. Ship proceeding en route.
2. Self-propelled ship's speed 7 kts or greater; non-self-propelled ship's speed 4 kts or greater.
3. Discharge is below the waterline.
4. Discharge procedures are approved in P&A Manual.
5. Discharge is greater than 12 nm from nearest land.
6. Depth of water is 25 meters or more.
7. Quantity of NLS discharged per tank is less than 3 m3 or 1/1000 of the tank's capacity.

Category D—

1. Ship proceeding en route.
2. Self-propelled ship's speed 7 kts or greater; non-self-propelled ship's speed 4 kts or greater.
3. Discharge is greater than 12 nm from nearest land.

4. Discharge concentration from the tank is less than 1 part in 10 or discharged below the waterline.

Provisionally Assessed NLS*—

1. Discharge in accordance with restrictions for provisional category.

Uncategorized Substances*—

1. Prohibited.

Non-harmful Substances—

1. No restrictions on discharges.

**NOTE: ***Includes ballast water, tank washings, or other residues or mixtures containing such NLS

FIGURE E1-11: NLS DISCHARGE RESTRICTIONS INSIDE OF SPECIAL AREAS

Category A prohibited

1. Self-propelled ship's speed 7 kts or except subsequent water greater;
2. Non-self-propelled ship's added to tank after tank speed 4 kts or greater prewashing satisfactorily
3. Discharge is below the waterline completed IAW 46 CFR 153 or
4. Discharge is greater than 12 nm from Reg 8 of Annex II of MARPOL nearest land 73/78
5. Depth of water is 25 meters or more

Category B prohibited

1. Ship proceeding en route except subsequent water
2. Self-propelled ship's speed 7 kts or added to tank after tank greater; non-self-propelled ship's prewashing satisfactorily speed 4 kts or greater completed IAW 46 CFR 153 or
3. Discharge is below the waterline Reg 8 of Annex II of MARPOL
4. Discharge procedures are approved in P&A Manual
5. Discharge is greater than 12 nm from nearest land
6. Depth of water is 25 meters or more

7. Quantity of NLS discharged per tank is less than 1 m^3 or 1/3000 of the tank's capacity

Category C*

1. Ship proceeding en route
2. Self-propelled ship's speed 7 kts or greater; non-self-propelled ship's speed 4 kts or greater
3. Discharge is below the waterline
4. Discharge procedures are approved in P&A Manual
5. Discharge is greater than 12 nm from nearest land
6. Depth of water is 25 meters or more
7. Quantity of NLS discharged per tank is less than 3 m^3 or 1/1000 of the tank's capacity

Category D

1. Ship proceeding en route
2. Self-propelled ship's speed 7 kts or greater; non-self-propelled ship's speed 4 kts or greater
3. Discharge is greater than 12 nm from nearest land
4. Discharge concentration from the tank is less than 1 part in 10 or discharged below the waterline

Provisionally Assessed NLS*

1. Discharge in accordance with restrictions for provisional category

Uncategorized Substances

1. Prohibited

Non-Harmful Substances

1. No restrictions on discharges

NOTE: *Includes ballast water, tank washings, or other residues or mixtures containing such NLS.

(n) Alleged discharge investigation procedures. The following procedures should be followed when investigating an alleged discharge violation. Figure E1-12 may be of help in determining the type of information to gather when investigating a

possible violation. For enforcement guidance for MARPOL Annex II discharge violations, see the MSM Volume I, Administration and Management, COMDTINST M16000.6 (series), Chapter 4.

(1) Prior to boarding, obtain a vessel history from the MISLE. If the investigation is the result of a received report of an alleged discharge violation or from an MISLE Vessel Lookout notice, review the discharge sighting report or contact the office that issued the Lookout to obtain additional information.

(2) Upon boarding the ship, inform the master that his or her ship is suspected of discharging NLS in violation of Annex II of MARPOL 73/78 and/or APPS.

(3) Review the ship's COI, COC, COF, NLS Certificate, or IOPP Certificate, as appropriate, for validity and to determine if the ship's equipment and operations comply with MARPOL Annex II and 46 CFR Part 153.

(4) Review the ship's P&A Manual to determine if the Manual is approved, what NLSs are permitted to be carried, and what the specific procedures are for discharging NLS.

(5) Review the discharge entries in the CRB and other ship's logs for the period of the suspected unauthorized discharge. Compare this information to the requirements in Figure E1-10 or E1-11 to determine if the ship meets the restrictions for location, speed, depth of water, etc., at the time and in the location of the reported sighting. If no discharge is recorded for the time of the sighting, check the CRB for the last discharge and note if the ship was in the area of the reported sighting when it discharged. Question the master, chief mate, and engineer separately as to what could have been sighted being discharged from the ship, e.g., oil, bilge waste, garbage, gray water, etc.

(6) For ships using the interim pumping and piping arrangements for tanks carrying Category B NLS, review the outputs of the recording devices to determine the time the discharge started and stopped and to determine, if applicable, if the flow rate requirements stated in the P&A Manual were met.

(7) Compare the continuous records (Paragraph E.6.b of this chapter), if applicable, to the CRB entries to see if they correspond.

(8) Compare the discharge information in the CRB to the authorized procedure in the P&A Manual to determine if the discharge quantity was correct and if the P&A Manual procedures were followed correctly.

(9) Check for missing CRB entries that should have been made during a particular voyage or in connection with associated transfer operations.

(10) Check the sequence of NLS transfers in the CRB for discrepancies.

(11) If the pages of the CRB or other documents are required for evidence, make copies and have the master certify the accuracy of the reproductions.

(12) Interview ship's personnel concerning the ship's operations on the date(s) in question.

---

7. Annex II Prewash and Prewash Surveyor Guidance and Procedures

a. General requirements. The United States, in accordance with Regulation 13 of Annex II and 46 CFR 153.1108 and 153.1112, requires ships to conduct mandatory in-port prewashes after unloading Category (X) and solidifying or high viscosity Category B and C (Y) NLSs.

(1) Prewashes are also required for other special circumstances such as not following P&A Manual procedures for unloading.

(2) 46 CFR 153.1120 requires a prewash surveyor to witness that mandatory prewashes are correctly performed after unloading of Category (X) NLSs. The primary responsibility of the prewash surveyor is to ensure that prewash operations are conducted in accordance with the prewash procedures specified in the ship's P&A Manual.

(3) To assist the pre-wash surveyor in performing his or her duties, a check-off list was developed (see Figure E1-13). The check-off list ensures that the surveyor performs all the actions dictated by regulation and the guidance presented here. Upon completion, a copy of the check-off list should be scanned into the vessel’s document file in MISLE. The check-off list should be copied directly from this section for local use.

(4) As outlined below, cargo tanks containing Category A (X) NLS, as well as those containing Category (Y) NLS considered to be either "solidifying" and/or "high viscosity," require prewashing, unless waived by one of the conditions described in Prewash Waivers, E.7.e of this Chapter.

(5) Only Category (X) prewashes must be witnessed a prewash surveyor. In addition to witnessing prewash operations that occur at the unloading port,

prewash surveyors are to witness those Category (X) prewashes which might occur at either a tank cleaning facility or at a ship repair yard.

(a) Unloading operations requiring a prewash and discharge of the prewash residue to an adequate reception facility provided by the terminal.

(b) Category (X) NLS. After a cargo tank containing a Category A (X) NLS is unloaded, the tank must be prewashed in accordance with the procedures specified in the ship's P&A Manual and in 46 CFR 153.1120. This prewash operation must be witnessed by a prewash surveyor. Furthermore, the prewash residue must be discharged to a reception facility listed on a Certificate of Adequacy for NLSs prior to the ship leaving the unloading port.

FIGURE E1-12: ITEMIZED LIST OF POSSIBLE EVIDENCE ON ALLEGED CONTRAVENTION OF MARPOL 73/78 ANNEX II DISCHARGE PROVISIONS

1. ACTION ON SIGHTING POLLUTION

1.1 Particulars of ship or ships suspected of contravention.
1.1.1 Name of ship.
1.1.2 Reasons for suspecting the ship.
1.1.3 Date and time (UTC) of observation or identification.
1.1.4 Position of ship.
1.1.5 Flag and port of registry.
1.1.6 Type (e.g., tanker, cargo ship, passenger ship, fishing vessel), size (estimated tonnage) and other descriptive data (e.g., superstructure color and funnel mark).
1.1.7 Draught condition (loaded or in ballast).
1.1.8 Approximate course and speed.
1.1.9 Position of slick in relation to ship (e.g., astern, port, starboard).
1.1.10 Part of the ship from which discharge was seen emanating.
1.1.11 Whether the discharge ceased when ship was observed or contacted by radio.
1.2 Particulars of slick.
1.2.1 Date and time (UTC) of observation, if different from 1.1.3.
1.2.2 Position of slick in longitude and latitude, if different from 1.1.4.
1.2.3 Approximate distance, in nautical miles, from the nearest land.
1.2.4 Depth of water according to sea chart.
1.2.5 Approximate overall dimension of slick (length, width, and percentage thereof covered).

1.2.6 Physical description of slick (direction and form, e.g., continuous, in patches or in windows).
1.2.7 Color of slick.
1.2.8 Sky conditions (bright sunshine, overcast, etc.), lightfall, and visibility (kms) at the time of observation.
1.2.9 Sea state.
1.2.10 Direction and speed of surface wind.
1.2.11 Direction and speed of current.
1.3 Identification of the observer(s).
1.3.1 Name of the observer.
1.3.2 Organization with which observer is affiliated (if any).
1.3.3 Observer's status within the organization.
1.3.4 Observation made from aircraft, ship, shore or otherwise.
1.3.5 Name or identity of ship or aircraft from which the observation was made.
1.3.6 Specific location of ship, aircraft, place on shore or otherwise from which observation was made.
1.3.7 Activity engaged in by observer when observation was made, for example: patrol, voyage (flight, route from, to ...), etc.
1.4 Method of observation and documentation.
1.4.1 Visual.
1.4.2 Conventional photographs.
1.4.3 Remote sensing records and/or remote sensing photographs.
1.4.4 Samples taken from slick.
1.4.5 Any other form of observation (specify).

NOTE: A photograph of the discharge should be in color. The best results may be obtained with the following three photographs:

a. Details of the slick taken almost vertically down from an altitude of less than 300 meters with the sun behind the photographer.

b. An overall view of the ship and "slick" showing a substance emanating from particular ship.

c. Details of the ship for the purposes of identification.

1.5 Other information if radio contact can be established.
1.5.1 Master informed of pollution.
1.5.2 Explanation from master.
1.5.3 Ship's last port of call.
1.5.4 Ship's next port of call.
1.5.5 Name of ship's master and owner.

1.5.6 Ship's call sign.

2. INVESTIGATION ON BOARD

2.1 Inspection of the Certificate (COF or NLS Certificate).
2.1.1 Name of ship.
2.1.2 Distinctive number or letters.
2.1.3 Port of registry.
2.1.4 Type of ship.
2.1.5 Date and place of issue.
2.1.6 Date and place of endorsement.
2.2 Inspection of P&A Manual
2.2.1 List of Annex II substances the ship is permitted to carry
2.2.2 Limitations as to tanks in which these substances may be carried
2.2.3 Ship equipped with an efficient stripping system
2.2.4 Residue quantities established at survey
2.3 Inspection of Cargo Record Book (CRB).
2.3.1 Copy sufficient pages of the CRB to cover a full loading/unloading/ballasting and tank cleaning cycle of the ship. Also copy the tank diagram.
2.4 Inspection of log book.
2.4.1 Last port, date of departure, draught forward and aft.
2.4.2 Current port, date of arrival, draught forward and aft.
2.4.3 Ship's position at or near the time the incident was reported.
2.4.4 Spot check if times entered in the cargo record book in respect to discharges correspond with sufficient distance from the nearest land, the required ship's speed and with sufficient water depth.
2.5 Inspection of other documentation on board.
2.5.1 Other documentation relevant for evidence (if necessary make copies) such as the following:
2.5.1.1 Cargo documents of cargo presently or recently carried, together with relevant information on required unloading temperature, viscosity and/or melting point.
2.5.1.2 Records of temperature of substances during unloading.
2.5.1.3 Records of monitoring equipment if fitted.
2.6 Inspection of ship.
2.6.1 Ship's equipment in accordance with the P&A Manual.
2.6.2 Samples taken; state location on board.
2.6.3 Sources of considerable leakage.
2.6.4 Cargo residues on surface of segregated or dedicated clean ballast.
2.6.5 Condition of pumproom bilges.
2.6.6 Slop tank contents (estimate quantity of water and residues).

2.7 Statements of persons concerned. If the CRB has not been properly completed, information on the following questions may be pertinent:

2.7.1 Was there a discharge (accidental or intentional) at the time indicated on the incident report?

2.7.2 Which tanks are going to be loaded in the port?

2.7.3 Which tanks needed cleaning at sea? Had the tanks been prewashed?

2.7.4 When and where were these cleaned?

2.7.5 Residues of which substances were involved?

2.7.6 What was done with the tank washing slops?

2.7.7 Was the slop tank, or cargo tank used as a slop tank, discharged at sea?

2.7.8 When and where was the discharge effected?

2.7.9 What are the contents of the slop tank or cargo tank used as slop tank?

2.7.10 Which tanks contained the dirty ballast during the ballast voyage (if ship arrived in ballast)?

2.7.11 Which tanks contained the clean ballast during the ballast voyage (if ship arrived in ballast)?

2.7.12 Details of the present voyage of the ship (previous ports, next ports, trade).

2.7.13 Difficulties experienced with discharge to shore reception facilities

2.7.14 Difficulties experienced with efficient stripping operations.

2.7.15 Which tanks are clean or dirty on arrival?

2.7.16 Repairs carried out or envisaged in cargo tanks

2.8 Miscellaneous information.

2.8.1 Comments in respect of condition of ship's equipment.

2.8.2 Comments in respect of pollution report.

2.8.3 Other comments.

3. INVESTIGATION ASHORE

3.1 Analyses of samples.

3.1.1 Indicate method and results of the samples' analyses.

3.2 Further information.

3.2.1 Additional information on the ship, obtained from terminal staff, tank cleaning contractors or shore reception facilities may be pertinent.

NOTE: Any information under this heading is, if practicable, to be corroborated by documentation such as signed statements, invoices, receipts, etc.

3.3 Information from previous unloading port terminal.

3.3.1 Confirmation that the ship unloaded, stripped or prewashed in accordance with its P&A Manual.

3.3.2 The nature of difficulties, if any.

3.3.3 Restrictions by authorities under which the ship was permitted to sail.

3.3.4 Restrictions in respect of shore reception facilities.

4. CONCLUSION

4.1 Summing up of the investigator's conclusions.
4.2 Indication of applicable provisions of Annex II to MARPOL 73/78 which the ship is suspected of having contravened.
4.3 Did the results of the investigation warrant the filing of a deficiency report?

(6) Category (Y) - potentially solidifying or high viscosity. A cargo is determined to be a solidifying or a high viscosity substance only at the time of offloading. Cargoes with the potential for being high viscosity substances contain a reference to .908(a) in the Special Requirements column of 46 CFR Part153, Table 1. Those that are potentially solidifying substances contain a reference to .908(b) in 46 CFR Part153, Table 1. A prewash of the cargo tanks and transfer of the NLS residue/water mixture ashore in accordance with 46 CFR 153 is required for these cargoes under the following conditions:

(a) Category (Y) high viscosity NLS, if unloaded at a temperature where the viscosity is greater than 25 mPa.s.

(b) Category (Y) high viscosity NLS, if unloaded outside of a Special Area at a temperature where the viscosity is greater than 60 mPa.s.

(c) Category (Y) high viscosity NLS, if unloaded inside of a Special Area at a temperature where the viscosity is greater than 25 mPa.s.

(d) Category (Y) solidifying NLS with melting point greater than 0° but less than 15°C, if the temperature of the cargo at the time of transfer is less than 5°C above the melting point of the NLS cargo.

(e) Category (Y) solidifying NLS with a melting point greater than 15°C, if the temperature of the cargo at the time of transfer is less than 10°C above the melting point of the NLS cargo.

(f) Cargo melting point and viscosity information may be obtained from the master. Under requirements in 46 CFR 153.908, the shipper is required to supply this information to the master.

(g) For the purpose of establishing whether a potentially solidifying or high viscosity Category (Y) NLS is unloaded at its proper temperature so as to

avoid a mandatory prewash, the temperature of the NLS cargo may be measured by--

i. A temperature sensor in the bottom of the tank in accordance with 46 CFR 153.440(a)(3);

ii. A portable temperature sensor in accordance with 46 CFR 153.440(c); or

iii. A system which measures the temperature of all interior cargo tank surfaces throughout unloading in accordance with 46 CFR 153.1108(c).

(FIGURE E1-13 to be Added Later In Electronic Version)

---

8. Procedures for Determining Whether an NLS is a Potentially Solidifying and/or High Viscosity NLS and Whether These NLS Require a Prewash

a. To determine whether an NLS is a potentially solidifying and/or high viscosity NLS, find the name of the NLS in 46 CFR Part 153, Table 1. Potentially high viscosity NLSs will have a reference to .908(a) in the Special Requirements column. Potentially solidifying NLSs will have a reference to .908(b) in the Special Requirements column. Some NLSs will have reference to both .908(a) and .908(b), indicating that they are both potentially solidifying and high viscosity.

b. Record the MARPOL Annex II pollution category (X, Y, Z or OS).

c. Determining whether a potentially solidifying NLS needs a prewash.

d. Find the melting point of the NLS from the Bill of Lading or shipping papers.

e. If the melting point of the NLS is greater than O°C (32°F) and less than 15°C (59°F), the NLS must be unloaded at a temperature that is 5°C (9°F) or more above its melting point to not require a prewash.

f. If the melting point of the NLS is greater than 15°C, (59°F) the NLS must be unloaded at a temperature that is 10°C (18°F) or more above its melting point to not require a prewash.

g. Compare the actual NLS unloading temperature to the above requirements to determine if a prewash is required.

h. For example, Cyclohexane, in 46 CFR Part 153,Table 1, has a reference to .908(b) in the Special Requirements column. From the shipping papers, the melting point is 6.6°C. The unloading temperature is 20°C, which is more than 5°C above the NLSs melting point; therefore, a prewash is not required.

i. The following procedures describe how to determine whether a potentially high viscosity NLS needs a prewash. From the Bill of Lading or shipping papers, find--

(1) For Category (Y) NLS, the temperature at which it has a viscosity of 25 mPa.s; and

(2) For Category Y NLS, the temperature at which it has a viscosity of 60 mPa.s.

(3) If the actual unloading temperature is greater than the temperature recorded in (a) above, then the NLS does not need a prewash. For example, Cyclohexanol, in Table 1 in 46 CFR 153, is a Category C NLS and has a reference to .908(a) in the Special Requirements column. According to the shipping papers, the temperature at which Cyclohexanol has a viscosity of 25 mPa.s is 40°C. The unloading temperature is 45°C, which is greater than 40°C; therefore, the NLS does not require a prewash.

NOTE: The higher the temperature, the less viscous a material and the smaller the value of mPa.s.

j. Other situations requiring a prewash.

(1) Category B and C non-high viscosity or non-solidifying. Cargo tanks containing Category B or C non-solidifying or non-high viscosity NLS require prewashing as described below:

(2) Category B. A ship operating under either the interim standards in 46 CFR 153.481(b) or under a restricted voyage waiver granted under 46 CFR 153.483 must prewash the appropriate tanks in accordance with the procedures specified in the ship's P&A Manual.

(a) Under the interim standards, the ship may discharge the NLS waste to either an adequate reception facility or to a slop tank for discharge at sea.

(b) When operating under a restricted voyage waiver, a ship must discharge the prewash residue from these operations to an adequate reception facility. See paragraph E.7.e of this chapter on restricted voyage waivers.

(3) Category C. A ship operating under a restricted voyage waiver granted under 46 CFR 153.483 must prewash the appropriate tanks in accordance with the procedures specified in the ship's P&A Manual. The ship must discharge the prewash residue to an adequate reception facility prior to leaving the unloading port. For more information, see Paragraph E.7.e of this Chapter on restricted voyage waivers.

(4) Category B And C. In situations where more Category B or C cargo residue remains in a cargo tank and transfer piping because the tank(s) and piping were not capable of being unloaded in accordance with the unloading procedures specified in the ship's P&A Manual, the tank(s) must be prewashed following the procedures specified in 46 CFR 153.1120, except when--

(a) The next cargo is one that can be loaded without the need to wash the tank and a waiver can be issued under 46 CFR 153.1114(a) (see paragraph E.7.e of this Chapter); or

(b) Alternative unloading procedures have been used and it can be established that the appropriate tank(s) and piping contain less cargo residue than they would if they had been unloaded in accordance with the unloading procedures specified in the ship's P&A Manual. See 46 CFR 153.1116(b).

k. Ventilation tank cleaning. As an alternative to prewashing, ships may clean tanks by ventilation when unloading Category A (X), B (Y), or C (Z) cargoes whose vapor pressure exceeds 5 kPa (50 mbar) at 20°C (68°F). To clean tanks by ventilation, a ship must have an approved procedure in its P&A Manual. The ventilation procedure may be conducted at sea and does not have to be witnessed by the prewash surveyor. (Ventilation may be prohibited in port by state and local authorities.) The ship's P&A Manual will indicate for which cargoes and cargo tanks ventilation is permitted. The manual will also provide a general description of the ship's ventilation system and how the ventilation equipment must be used for tank cleaning. This will include the following:

(1) Number and type of fans required.

(2) Fan location.

(3) Minimum air flow or fan speed.

(4) Minimum time required for ventilation.

(5) Procedures and equipment for ensuring that the tanks are dry at the completion for ventilation.

(6) Any special safety procedures to be followed during ventilating.

l. Prewash waivers. The requirement for prewashing cargo tanks from which Category X Y, or ZNLS were unloaded, as outlined in E.2 above, may be waived or otherwise be omitted under any one of the following conditions:

(l) If the Commanding Officer, G-MSC grants the ship a restricted voyage waiver, that allows for the appropriate cargo tank(s) to be prewashed only at those ports or terminals specified in the waiver (46 CFR 153.483 and 46 CFR 153.10). This is for Category YNLS only (including potentially solidifying and high viscosity).

(2) If the Commanding Officer, MSC, grants the ship a dedicated cargo tank waiver which eliminates prewashing provided that the tank only carries the specific cargo listed on the vessel's COI or COC. If the tank is washed or ballasted, the wash water residue or ballast must be discharged to an adequate reception facility (46 CFR 153.10 and 153.491(a)).

(3) A surveyor signs a statement in the CRB that the next cargo has been determined to be one that may be loaded without washing the cargo tank(s) and the cargo tank(s) will not be washed or ballasted before it is reloaded (46 CFR 153.1114(a)).

(4) The cargo tank(s) will be cleaned by ventilation (46 CFR 153.1114(b)).

(5) The Coast Guard issues written authorization allowing the appropriate tank(s) to be prewashed in another port. If the prewash port is a foreign port, authorization is granted by Commandant (CG-OES); if the prewash port is a U.S. port, authorization is granted by the COTP with jurisdiction over the unloading port. In both cases, the procedures and criteria that need to be complied with before granting authorization are outlined in 46 CFR 153.1119(c).

(6) A schematic diagram outlining the relationship between cargo unloading, waivers, and prewash operations is provided as figure E1-14.

m. Prewash surveyor duties and procedures.

n. Notification. As required by 33 CFR 151.43, the ship must contact the COTP at least 24 hours before a prewash surveyor is needed. Items i through v, listed below, are required in the notification. The list also includes other, optional, information which will assist in coordinating prewash operations.

(1) Ship's name.

(2) Expected time the prewashing operations will commence (prewash surveyors must arrive by this time, unless the prewash time is postponed by the ship).

(3) NLS (by name and category) to be unloaded from the tanks to be prewashed.

(4) Estimated volume of prewash residue to be discharged.

(5) Name and amount of any tank cleaning agent(s) to be used.

(6) Name and location of the unloading terminal.

(7) Ship's expected time of arrival at the unloading terminal.

(8) Cargo tank(s) to be prewashed.

(9) Intended disposition of residues, i.e., reception facility at visiting terminal or a reception facility at another port; and

(10) Name and location of the reception facility (if other than the unloading terminal).

o. Preliminary preparations.

(1) Upon receipt of the above information, and as a preliminary safety measure, prewash surveyors should familiarize themselves with the characteristics of the NLS to be prewashed, particularly those related to toxicity. Such information can be found in the Chemical data Guide for Bulk Shipment by Water, COMDTINST M16616.6A, the CHRIS Manual (COMDTINST 16465.11 and .12 and the chemical data sheets found in Volumes 2 and 3 of the International Chamber of Shipping (ICS) Tanker Safety Guide (Chemicals).

(2) Prewash surveyors should also check that the cargo tank(s) to be prewashed are loaded with Category Xs substances – only Category X prewashes are required to be witnessed by a prewash surveyor.

(3) It is anticipated that many of the prewash operations will be conducted with portable tank washing equipment lowered into position through open butterworth holes in the deck. The use of portable tank washing machines can pose particularly acute hazards when tank covers must be removed, increasing the possibility of splash hazard in the area of the tank opening. Consequently, the surveyors should pay particular attention to the health hazard information

in the above documents as well as any recommendations for protective clothing needed for working in the vicinity of these cargoes.

(4) Prewash surveyors should be prepared to use the recommended personal safety equipment. When equipment is not available to match the level of threat of the chemical involved and/or method of prewash involved, surveyors should view the operation at a safe distance.

(5) When viewing the operation at a distance, prewash surveyors should verify compliance with the P&A Manual as much as is practical. The start of portable tank cleaning machines can be determined by witnessing the motion of the portable hoses. Often, the pump gauges are located in cargo control rooms at a safe distance from the prewash operations. These methods and others should be employed to maximize the surveyor's personal safety and verify compliance with the prewash requirements.

(6) Review the vessel's history from MISLE and confirm the time the prewash is expected to commence.

p. Arrival at the terminal. Operating expenses for oceangoing chemical carriers typically run in the thousands of dollars per hour. Surveyors should ensure prewash operations are not delayed due to their late arrival. The prewash surveyor, upon arrival at the terminal, should make introductions, advise the reason for visit, and examine the terminal's Certificate of Adequacy (COA) for validity and to verify that the reception facility is approved for the NLS to be unloaded. The prewash surveyor should also obtain, from the appropriate personnel, any information which might affect the ability to conduct cargo discharge and/or prewash operations in accordance with the procedures specified in the ship's P&A Manual, e.g., terminal or reception facility pipeline temporarily out of service, etc.

q. Arrival aboard the vessel: U.S. flag vessels. Upon boarding a U.S. flag vessel, the prewash surveyor should introduce him or herself to the master or chief officer and request the following documents:

(FIGURE E1-14 To Be Added Later In Electronic Version)

(1) An endorsed COI to carry MARPOL Annex II NLS.

(2) Cargo Plan and Bill of Lading (shipping papers).

(3) P&A Manual.

(4) CRB.

r. Arrival aboard the vessel: foreign flag vessels. Upon boarding a foreign flag vessel, the prewash surveyor should introduce him or herself to the master or chief officer and request the following documents:

(1) The COC, COF (or NLS Certificate if vessel is not required to have a COF due to the cargoes authorized for carriage). Foreign flag ships calling at U.S. ports for the first time will not possess the endorsed COC. Prior to arrival, such ships must have submitted their COF to Commanding Officer, MSC and received acceptance and arranged with the OCMI for an examination for issuance of the COC.

(2) Cargo plan and Bill of Lading (shipping papers).

(3) P&A Manual.

(4) CRB.

(5) Using the above documents, the prewash surveyor should then confirm the following:

(a) The NLSs to be unloaded at the terminal, their categories, and cargo tank location (refer to the ship's cargo plan, Bill of Lading, P&A Manual and CRB).

(b) The cargo tanks from which Category A (X) NLSs will be unloaded (refer to the ship's cargo plan, Bill of Lading, P&A Manual).

(c) The prewash procedures to be used in each cargo tank (refer to the ship's P&A Manual).

(d) The required disposition of the prewash residue (refer to E.1-E.3 and E.5 of this Chapter).

s. Prewash operations.

(1) Ships will normally be ready to begin prewash operations when the cargo tank(s) are empty and as soon as possible after stripping. However, prewash operations for Category X NLSs must not begin until the prewash surveyor is aboard the ship. They must also be conducted in accordance with the prewash procedures described in the ship's P&A Manual. In addition to providing a general description of the ship's tank cleaning system, the P&A Manual will describe how the tank cleaning must be conducted. This will include the following:

(2) Number and type of washing machines to be used.

(3) Machine location.

(4) Minimum washing pressure.

(5) Minimum number of washing machine cycles (or the minimum time required for each prewashing operation).

(6) Minimum water temperature (when applicable).

(7) Tank cleaning agents which may be used (when applicable).

(8) In instances where the tank(s) cannot be washed with water, the tank cleaning agents or washing medium to be used, including an indication of when the actual prewash commences.

(9) During prewash operations, the prewash surveyor should determine that the fluid pressure, temperature, etc. are as specified in the ship’s P&A Manual.

(a) The appropriate gauges and thermometers will normally be found in the ship’s cargo control room or pump room.

(b) Prewash surveyors should also determine that the washing machines are operating. This can be accomplished by listening as the washing machine washes the tank. During the washing operation, the washing machine will normally generate an audible sound as the fluid stream passes across the tank top. The sound is particularly noticeable for fixed in-place tank cleaning machines.

(c) For fixed in-place machines utilizing portable drives, prewash surveyors should also visually determine that the machines are washing the tank

throughout the washing cycle specified in the ship's P&A Manual. Portable drives are generally outfitted with indicators for this purpose.

(10) Prewash surveyors should accomplish the above tasks on a spot check basis, standing upwind of the appropriate cargo tank(s) whenever possible.

(11) For Category X cargoes, it may also be necessary to measure the concentration of the prewash residue to ensure that it is less than the maximum permitted by the regulations, i.e., 0.1 percent (by weight). See 46 CFR 153.1120(a). The ship's P&A Manual will identify which Category A cargoes require this measurement and it will list the equipment and procedures necessary to accomplish this procedure.

(12) When enough prewash residue has been collected in the tank bottom for the pump to gain suction, the cargo or stripping pump must be started and the prewash residue pumped out. When a measurement of the prewash concentration of a Category A (X) NLS is required, this is to be accomplished and/or arranged for by the ship. The prewash surveyor should witness the chemical analysis and ensure that the discharge concentration meets the criteria for the specific Category A (X) NLS.

t. CRB Entries for prewash operations. The prewash surveyor must make the appropriate entries in section J of the ship's CRB at the completion of any mandatory prewash operation. The ship's officer is required to complete section D, items 12-14, of the CRB.

F. MARPOL 73/78 ANNEX V GUIDANCE AND PROCEDURES

1. Applicability

a. The U.S. regulations to implement MARPOL Annex V apply to all inspected or uninspected marine craft, regardless of flag, on the navigable waters and within the 200 mile Exclusive Economic Zone (EEZ) of the United States, and to U.S. ships wherever they are located.

b. Vessels exempt from MARPOL Annex V include foreign flag warships, naval auxiliaries, or other ships owned and operated by a country when engaged in non-commercial service.

c. Ships subject to MARPOL Annex V are prohibited from discharging plastics into the sea and are limited in discharging floating dunnage, lining and packing

materials, paper, rags, glass, metal, bottles, crockery and similar refuse, and food waste.

d. MARPOL Annex V requires Party nations to ensure that ports and terminals provide adequate reception facilities to receive ship-generated garbage. For general enforcement guidance, see the Marine Safety Manual, Volume I.

---

2. Placards, Waste Management Plans, and Recordkeeping for Ships

a. Placards. All U.S. vessels 26 feet (8 meters) or more in length and floating platforms in transit must display MARPOL Annex V placards in prominent locations and in sufficient numbers so that they can be read by the crew and passengers. The placards must inform the reader of MARPOL Annex V discharge restrictions. Specific requirements for the placards can be found in 33 CFR 151.59.

(1) Foreign flag vessels 12 meters or more in length must display placards which notify the crew and passengers of the disposal requirements in Annex V. Specific requirements for the placards can be found in Annex V, Regulation 9.

b. Waste management plans. All oceangoing U.S. vessels of 12 m (40 ft) or more in length and all fixed or floating platforms are required to maintain a written waste management plan on board meeting the requirements in 33 CFR 151.57.

(1) Foreign flagged vessels: Every ship 400 GT and above, and every ship which is certified to carry 15 persons or more, must carry a garbage management plan meeting the requirements of Annex V, Regulation 9.

(2) Although the applicability for garbage (waste management) plans differs slightly between U.S. and MARPOL regulations, the plan content requirements are basically the same:

(3) Provide for the discharge of garbage by means that meet MARPOL Annex V requirements;

(4) Describe the procedures for collecting, processing, storing, and discharging garbage; and

(5) Designate the person who is in charge of carrying out the plan.

c. Recordkeeping. Recordkeeping requirements are contained in 33 CFR 151.55 and Annex V Regulation 9.

---

3. Discharge Restrictions

a. No person on board any ship may discharge garbage into the navigable waters of the United States.

b. Further restrictions based on garbage type:

Garbage Type	Disposal
Plastics - includes synthetic ropes, fishing nets, plastic bags and biodegradable plastics	• Prohibited in all areas
Floating dunnage, lining and packing materials	• Prohibited less than 40 kilometers (25 miles) from nearest land
Food waste or paper, rags, glass, metal, bottles, crockery and similar refuse	• Prohibited less than 19.2 kilometers (12 miles) from nearest land
Comminuted or ground food wastes, paper, rags, glass, etc.	• Prohibited less than 4.8 kilometers (3 miles) from nearest landents

4. Incinerated Plastic

a. The IMO's Guidelines for the Implementation of Annex V states that plastic garbage must be retained on board ship unless it is reduced to ash by incineration.

b. Clinkers or any hard residue that remains from the incineration of plastic are still considered plastic under MARPOL Annex V and cannot be discharged at sea. If plastic has been incinerated so that only ash remains, the ash may be discharged overboard provided it is not toxic or containing heavy metals. High intensity incinerators are the most effective way to reduce plastic to ash.

c. During exams, PSCOs should ensure vessel crews are educated on this issue and advised to retain receipts from shore disposal of plastic clinkers.

5. Operational Requirements for Ships

a. There are several ways to discharge ship-generated garbage in accordance with MARPOL Annex V.

b. If plastics are separated from other garbage on board ship, the remaining garbage may be incinerated, retained on board for later shore disposal, or discharged at sea where allowed.

c. Mixtures of garbage having different discharge requirements must be retained on board for disposal ashore or discharged in accordance with the most stringent disposal requirements.

d. If a ship has plastics on board which require disposal and the master, operator, or person in charge of the ship cannot show compliance with the regulations, these factors may be used as evidence that Annex V of MARPOL 73/78 has been violated.

e. 33 CFR 151.63 contains a listing of some means by which a ship's master could show that the ship is in compliance with the regulations and Annex V, such as accurately completed record book, bags of garbage being held for shore disposal and/or reception facility receipts.

---

6. Operational Requirements for Fixed or Floating Platforms and Associated Vessels

a. MARPOL Annex V and 33 CFR 151.73 places discharge restrictions on offshore platforms, rigs, and associated vessels. Discharge of all types of garbage less than 12 nm from land is prohibited.

b. Food waste which has been comminuted or ground so that it passes through a screen with openings no greater than 25 mm (one inch), may be discharged from fixed or floating platforms or from a ship within 500 meters of a platform, if the platform is located more than 12 nautical miles from land.

c. Since the MARPOL Annex V implementing regulations go beyond the requirements of the NPDES permitting system, an oil rig or platform operator could be in compliance with a valid EPA National Pollution Discharge Elimination System (NPDES) permit issued pursuant to regulations authorized under the Clean Water Act and not be in compliance with Annex V.

d. The EPA's NPDES permits issued to oil rigs and platforms prohibit the discharge of floating solid wastes and garbage, but allow sinkable wastes to be discharged unless specifically prohibited. MARPOL Annex V is more restrictive and only allows the discharge of food wastes beyond 12 miles (see above).

e. As of 2011, the EPA does not plan on revising their permits to align with MARPOL Annex V so the disparity between the NPDES process and Annex V requirements will remain for the foreseeable future.

---

7. APHIS Vessel Monitoring Program

a. The Animal and Plant Health Inspection Service (APHIS) of the U.S. Department of Agriculture (USDA) is a primary source of possible Annex V violation information for all arriving in the United States from foreign ports.

b. The goal of APHIS is to inspect all vessels that have called at foreign ports to verify compliance with certain requirements which are intended to prevent the introduction of bacteria and insects which could be harmful to plants or animals into the United States. (In some regions, APHIS does not have the resources to board 100 percent of foreign arrivals.)

c. USDA regulations prohibit vessels that have called at foreign ports (except Canada) from bringing ashore food, food wastes, or wastes which has been in contact with food for disposal unless certain requirements are met. If vessels wish to dispose of this type of waste while in port, they are required to employ special handling and incineration or sterilization by APHIS approved disposal companies are required.

d. During the course of their normal boardings, APHIS inspectors will determine compliance with MARPOL Annex V requirements and report any suspected violation to the local COTP on PPQ Form 288, Figure E1-15.

e. If resources permit, vessels suspected of violations by APHIS officers should be examined by Coast Guard personnel to verify that the vessel is not in compliance with MARPOL Annex V requirements and collect additional evidence.

f. Even if the Coast Guard is unable to board a vessel suspected by APHIS of a MARPOL Annex V violation, the report may still provide sufficient evidence for a civil penalty case or referral to the vessel's flag state if U.S. jurisdiction cannot be proven.

FIGURE E1-16: MARPOL ANNEX V BOARDING CHECKLIST

NOTE: Intended as review only.

For further guidance, refer to the MSM Volume II, Material Inspection, COMDTINST M16000.6 (series), Section F and Chapter E1.

For general enforcement guidance, see the MSM Volume I, Administration and Management, COMDTINST M16000.6 (series), Chapter 4.

(1) Review APHIS Boarding Report, if available, and determine whether it indicates a MARPOL V violation. Verify vessel name, flag, registration number, and call sign.

(2) Review shipboard garbage handling practices.

(a) Is the crew familiar with the requirements of MARPOL Annex V?

(b) How is ship-generated garbage disposed of?

(c) Are plastics used on board? Is there plastic in the ship's stores?

(d) Are plastics segregated from other garbage for disposal ashore?

(e) Is there garbage/plastic to be disposed of ashore?

(f) Are there shipboard spaces used for collecting and storing shipboard garbage?

(g) Is there a functioning incinerator on board? Is it used for incinerating plastics and other garbage? Are the residual plastic clinkers retained for disposal ashore?

(h) Is there a grinder or comminuter on board used for discharge of garbage between 3 and 12 nm (5.4 and 21.6 kilometers)?

(i) Are there receipts available from garbage discharges at port reception facilities?

(j) Are there log entries indicating garbage disposal at sea?

(k) Although not yet required, does the vessel keep a garbage discharge log indicating dates, locations, amounts, types and methods of garbage discharge?

(l) Are there ongoing educational programs to train shipboard personnel in garbage handling procedures?

(m) Although not required for foreign vessels, is there a written shipboard waste management plan and are garbage disposal placards displayed?

(3) Check for MARPOL Annex V Placards and Waste Management Plans.

(a) For U.S. vessels 12 m (40 ft) and greater in length, is there a waste management plan on board? Is there a designated crew member responsible for carrying out the plan?

(b) Foreign Flagged vessels: Every ship 400 GT and above, and every ship which is certified to carry 15 persons or more, is there a garbage management plan on board. Is there a designated crew member responsible for carrying out the plan?

(c) For vessels 7.92 m (26 ft) and greater in length, are there Annex V placards placed in prominent locations on board?

---

8. General Exam/Boarding Guidance

a. At sea. As virtually every vessel is subject to MARPOL Annex V, Coast Guard units are not expected to conduct exams/boardings exclusively for MARPOL Annex V compliance checks. MARPOL Annex V compliance checks should be conducted as resources permit and in conjunction with other routine activities, such as fisheries patrols, pollution investigations, marine casualty investigations or other law enforcement activities.

(1) Since there are no special equipment requirements, MARPOL Annex V compliance is verified by a review of the crew's garbage handling and disposal practices for ship-generated waste and recordkeeping.

(2) The checklist provided in Figure E1-16 may be used during Annex V compliance checks.

b. In port. Although the Coast Guard is not required to conduct any special or exclusive exams to monitor compliance with MARPOL Annex V, compliance checks should be completed as part of other vessel compliance activities.

(1) To verify that a vessel has undergone an APHIS inspection, the CG vessel examiner (marine inspector, PSCO) can review a copy of the vessel's PPQ FORM 288. The vessel examiner must still conduct a follow-up Coast Guard check for compliance with MARPOL Annex V.

(2) If a vessel has not undergone APHIS inspection, the vessel examiner should pay particular attention to shipboard garbage handling practices, use of plastics, and any evidence of possible illegal discharges.

(3) The checklist provided in Figure E1-16 may be used during Annex V compliance checks.

(4) APHIS inspectors do not normally board non-oceangoing vessels or U.S. flag vessels that are solely engaged in coastwise trade. Therefore, vessel examiners should determine compliance with the requirements of MARPOL Annex V when on board these vessels.

(a) If plastics are observed on board, there should be clear evidence of the crew's degree of compliance with Annex V provisions. This could be; e.g., use of an on board incinerator, accumulated plastic waste being retained for disposal ashore, or receipts from shore disposal.

(b) The vessel examiner should review the ship's garbage-handling practices, educate the crew on discharge restrictions, and note any evidence of noncompliance on the applicable Coast Guard exam report.

(c) The vessel's waste management plan should also be reviewed.

(5) When conducting foreign vessel and ocean-going U.S. vessel compliance verifications the following procedure should be used:

(a) Verify that an APHIS boarding has been conducted for this port call by inspecting the APHIS form for name and flag of the ship, date of inspection, PPQ officer's signature and any comments concerning Annex V discrepancies. This form is required to be left on board with the master or chief steward after an APHIS inspection.

(b) In cases where there has not been an APHIS boarding, determine how the vessel is complying with the Annex V discharge restrictions, particularly how and where it is disposing of its plastic waste. Some of the factors to be considered and documented by the vessel examiner in evaluating compliance are:

i. Records, including receipts, of garbage discharges at port reception facilities;

ii. Log entries indicating discharge of garbage;

iii. The presence and operability of equipment to treat ship-generated garbage, including, but not limited to, incinerators, grinders, or comminuters;

iv. The presence of and adherence to a written shipboard waste management plan;

v. The amount or absence of plastics in ship stores;

vi. Ongoing educational programs to train shipboard personnel of garbage handling procedures; and

vii. The presence of shipboard spaces used for collecting, processing, storing, and discharging ship-generated garbage.

viii. The most difficult aspect in establishing Annex V violations is proving U.S. jurisdiction. Even if a vessel master admits that all garbage, including plastics, was discharged at sea, it is sometimes impossible to prove that the discharge occurred within U.S. waters.

aa. If jurisdiction can be established by witnesses' statements or by log entries of garbage discharge and ship position, enforcement actions should be taken in accordance with the MSM Volume I, Administration and Management, COMDTINST M16000.6 (series), Chapter 4, and the case processed for civil penalty.

bb. Since 1992, the Coast Guard has been taking enforcement action under U.S. law, including referrals to the Department Justice. Coverage was expanded out to the EEZ because flag states were not taking adequate action in the cases forwarded by the U.S. Countries often failed to acknowledge receipt of the cases and many took little if any legal action against suspected vessels.

c. Building a case under MARPOL 73 /78 Annex V. If circumstances discovered during a exam or boarding indicate a possible MARPOL Annex V violation or if an incriminating report is received from another agency, vessel passenger, or vessel crew member, the following information should be collected to establish a civil penalty case: (Figure E1-17)

Information Class	Information to Collect
Vessel Data	• Vessel type; length of ship; last port of call/date; next port of call/date, distance of voyage; number of crew members.
Discharge Data	• Type of suspected discharge (oil, chemical, garbage/plastics); date/time of discharge; quantity of discharge; cause of discharge; description of discharge.
Location Data	• Location of ship when discharge occurred (Lat/Long, if known); body of water; miles from shore, if known.
Evidence	• Ship master's explanation, statement from witnesses, crew members or passengers; photographs or video tapes; discharge samples taken.
Observer Data	• Name/address of observer; phone; date/time of report; location of observer at time of observation.

(1) While it is ideal to collect the information listed above, such details are often not available, especially during a Coast Guard or APHIS boarding. In most of these cases, there will be only prima facie evidence. However, these cases should be developed to the fullest, and, when jurisdiction can be established, forwarded for prosecution. A prima facie case that plastics have been discharged in violation of MARPOL Annex V may be established if:

(2) There are no plastics on board for disposal ashore;

(3) It is evident from inspection that plastic materials are used on the vessel;

(4) There is no functional incinerator on board or other reasonable explanation as to lawful disposal practices; and

(5) There is no evidence of disposal to a reception facility since the vessel's arrival in port.

(6) An APHIS PPQ Form 288 (Figure E1-15) containing certain information can be the basis for a strong prima facie MARPOL Annex V case.

(a) If the APHIS PPQ Form 288 indicates that the crew of a vessel uses plastic materials, but that the vessel has arrived in port after several days at sea with plastic trash on board, and if the vessel has no incinerator or receipts from shore disposal, there may be sufficient evidence to prove that the violation occurred in water subject to the jurisdiction of the United States.

(b) To build such a case successfully, the COTP must consider several factors, including the location of the vessel's last port of call, the length of the

vessel's voyage, the number of crew members, and the estimated amount of time the vessel traveled in water subject to the jurisdiction of the United States before entering port.

i. It can be assumed that waste, including plastic, is generated during each shipboard meal. If a vessel has traveled the last leg of a journey in U.S. waters (often a distance of 200 nm (360 km) or more, over a time period of 12 hours or more) and arrives in port with no trash at all, it is likely that trash generated during that time period was discharged in water subject to the jurisdiction of the United States prior to entering port.

ii. To strengthen the case, the COTP should contact the vessel's previous and subsequent ports of call to determine and document whether the vessel off loaded waste in either port.

iii. This determination of U.S. jurisdiction cannot be made when an area's EEZ does not extend out to 200 nm (360 km), such as around Miami.

(c) If U.S. jurisdiction cannot be established, whether it be an APHIS-generated case or any case of suspected noncompliance with MARPOL, it is important that the case be forwarded to the vessel's flag state for enforcement action.

i. In these cases, the evidence should be documented in MISLE and the evidence (APHIS PPQ Form 288, Coast Guard boarding form, photos, etc.) forwarded to Commandant (CG-INV) for transmittal to the flag state.

ii. These cases should be sent to Commandant (CG-INV) within 2 weeks of the exam/boarding or receipt from APHIS in order to forward the information to the flag state in a timely manner. Each unit should maintain copies of the case files forwarded for flag state enforcement.

---

9. Class D Felony Cases/ Referral to Department of Justice

a. Cases in which MARPOL 73/78 Annex V is proven to have been "knowingly" violated are considered class D felony cases punishable by imprisonment of not more than 6 years (18 U.S.C. 3581(b)(4)) and a fine of not more than $250,000 for an individual (18 U.S.C. 357l(b)(3)) or not more than $500,000 for an organization (18 U.S.C. 3571(c)(3)).

b. Class D felony MARPOL cases must be developed for referral to the U.S. Attorney.

---

10. Reports from Private Citizens

a. All Coast Guard units should be prepared to receive reports of violation from the public, interested parties, environmental groups, state and local agencies, and other Federal agencies. Coast Guard personnel are directed to be responsive to callers and immediately record any such violation reports.

b. Sectors, MSUs, MSDs and small boat stations may use the Observer Marine Pollution Sighting Report (Figure E1-17) to record as much useful information as the caller can provide. Stations must send reports of MARPOL violations to the nearest COTP for action. COTPs must send a letter acknowledging all citizen reports received and provide the reporting party with an explanation of the steps being taken to process the case.

11. Violations and MISLE Entries

a. Investigations into possible MARPOL Annex V violations must be entered into MISLE as Incident Investigation Activities (IIA's). These IIA's must be entered in accordance with the guidance provided in the IIA/Enforcement Process Guide and the IIA/Enforcement User Manual.

G. MARPOL 73/78 REPORTING REQUIREMENTS AND INSTRUCTIONS

a. Open, clear and timely communication both within the Coast Guard and among Parties to MARPOL 73/78 and the IMO is paramount to the effective and consistent implementation of MARPOL 73/78.

b. As a Party, the United States is required to cooperate in the detection of violations and the enforcement of MARPOL 73/78, to use all appropriate and practical measures for detection and environmental monitoring, and to institute adequate procedures for reporting and accumulating evidence (MARPOL Article 6). To comply with this provision of MARPOL 73/78, it is necessary for the Coast Guard to submit annual reports concerning alleged violations, spill response activities, enforcement actions and programmatic information to the IMO and to other Parties.

1. Notification

a. COTPs must notify CG-INV in writing of all MARPOL cases being processed against foreign flag vessels (both for flag state referral and U.S. penalty action).

Under the Law of the Sea convention, the United States is required to notify flag state administrations of all MARPOL violations against foreign vessels.

(1) For MARPOL cases in which U.S. jurisdiction cannot be established, COTPs must continue to send Commandant (CG-INV) all case evidence to be forwarded for flag state enforcement.

(2) For MARPOL cases in which the Coast Guard can prove U.S. jurisdiction and intends to process for penalty, COTPs need only send basic information (vessel name, vessel identification number and MISLE case number) to notify Commandant (CG-INV) that a case has been initiated. Commandant (CG-INV) will then notify the flag state administration of the pending case.

---

2. Offshore Sighting Reports

a. Commanding officers of oceangoing surface units and aircraft commanders must report sightings of discharges (Oil, NLS or garbage) as follows:

b. Units must report by PRIORITY message addressed to the Coast Guard's National Response Center, Commandant (CG-MER-3) with the following sighting information:

P (Date Time Group)

FROM: (Name of unit)

TO: COGARD NATIONAL RESPONSE CENTER WASHINGTON DC

INFO: COMDT COGARD WASHINGTON DC//CG-INV/CG-CVC//

Parent Area

Parent District

Districts in which patrol was conducted

Other addresses as appropriate
BT

UNCLAS //16450//

SUBJ: MARPOL ENFORCEMENT REPORT

1. Discharge Sighting Information:

A. Discharge Sighting #1

1. Location of discharge

2. Date and time of sighting

3. Name and flag or home port of suspect ship

4. Ship's position at time of sighting

5. Ship's last port of call

6. Ship's next port of call

7. Discharge size and amount

8. Name(s) of person(s) making report

9. Additional information

B. Discharge Sighting #2, #3, etc...(Provide same information as above)

3. Vessel Lookouts

a. The Coast Guard will board suspected U.S. or foreign ships in ports under U.S. jurisdiction to investigate alleged MARPOL 73/78 violations. Upon receipt of a report of violation, Commandant (CG-CVC-2) will enter a Vessel Lookout in MISLE with specific compliance verification guidance to field units. In some cases, Commandant (CG-CVC-2) may designate the vessel as Priority 1.

4. Observer Marine Pollution Sighting Report

a. Personnel observing discharges offshore or noting evidence of illegal discharge during an inspection may complete an Observer Marine Pollution Sighting Report (Figure E1-17) to document their observations. It should be included in a COTP investigation. This format may be used for reports from anyone for any type of discharge.

H. MARPOL ANNEX VI

Refer to Commandant (CG-CVC) Policy Letter 09-01.

CHAPTER 2: INSPECTIONS RELATIVE TO SOLAS REQUIREMENTS

A. GENERAL PROCEDURES

1. Vessels to Which SOLAS is Applicable

The International Convention for the Safety of Life at Sea (SOLAS) is a convention of the International Maritime Organization (IMO), an agency of the United Nations. SOLAS applies to all mechanically propelled cargo and tank vessels of 500 or more Gross Tons (GT) and to all mechanically propelled passenger vessels that engage in international voyages and carry more than 12 passengers. By the IMO's definition, an international voyage means a voyage from a country to which SOLAS applies to a port outside of that country, or vice versa. A vessel's "administration" is defined as the government of a country the flag of which the vessel is eligible to sail under. In this context, vessels operating under the flag of the United States are those documented or numbered under the laws of the United States, including Guam, the Commonwealth of the Northern Mariana Islands, American Samoa, the District of Columbia, the U.S. Virgin Islands, and Puerto Rico. When in possession of a valid SOLAS certificate and in compliance with its terms, a U.S. flag vessel is entitled to all of the privileges described in the SOLAS Convention.

> **NOTE:** On 22 May 1982, the Intergovernmental Maritime Consultative Organization, or IMCO, changed its name to the International Maritime Organization (IMO).For simplicity, all IMCO resolutions passed prior to this change that remain effective are referred to below as IMO resolutions.

2. SOLAS 74/78

The requirements of the 1974 Convention (SOLAS 74) became effective on 25 May 1980. The 1978 Protocol, which modifies the original Convention, became effective on 1 June 1981. Together, they are referred to as SOLAS 74/78. Under the requirements of SOLAS 74/78, a new vessel is one for which the keel was laid on or after these effective dates. An existing vessel is one for which the keel was laid prior to these dates.

3. SOLAS Amendments

Amendments to the Convention should be expected. The first set of amendments were adopted in November 1981, as Maritime Safety Committee (MSC) Resolution MSC.1(XLV). These amendments deal primarily with Chapters II-1

and II-2, although minor changes to Chapters III, IV, V, and VI are included. These changes came into effect on 1 September 1984. A second set of amendments was adopted in June 1983. These primarily affect Chapters III and VII, with minor changes to Chapters II-1, II-2, and IV. These amendments became effective on 1 July 1986.

---

4. U.S. Application of SOLAS 74/78

a. General. By ratifying SOLAS 74/78, the United States has agreed to promulgate statutes, regulations, and other measures to implement the Convention. The 1978 Protocol required administrations (the government of a vessel's flag state) to institute arrangements for inspection or establish a mandatory annual survey requirement. The United States has chosen the mandatory annual survey method, to be carried out through inspection for certification program which includes periodic and annual inspections. (described later in this chapter). These measures will ensure that U.S. vessels are fit for service in terms of safety of life.

b. Authority. U.S. laws are used to enforce the terms of the Convention; no special authority is necessary. Vessel inspection regulations in Title 46, Code of Federal Regulations (CFR) generally align with the inspection requirements of SOLAS 74/78 (the only exceptions are requirements for radio equipment, which are administered by the Federal Communications Commission (FCC)). Inspection personnel generally need not refer to the Convention during inspections for certification. However, they must be thoroughly familiar with SOLAS requirements, which may be considered when inspection decisions are made (particularly when normal inspection requirements are altered).

c. Application to small passenger vessels under 100 GT (T-boats). The regulations in 46 CFR Subchapter T for small passenger vessels (under 100 GT) do not reflect the requirements of SOLAS 74/78, except by reference to the Convention. T-boats operating on international routes must apply SOLAS 74/78 requirements or hold SOLAS Exemption Certificates. Officers in Charge, Marine Inspection (OCMIs) certificating T-boats that will operate on international voyages through other inspection zones should contact the OCMI's of those zones to determine if additional requirements must be met for certification.

---

5. Previous SOLAS Conventions

The initial SOLAS Convention that entered into effect in 1929 was superseded in 1948, 1960, and again in 1974. SOLAS 74/78 incorporates by reference the 1929, 1948, and 1960 provisions applicable to existing vessels. Certificates granted under the 1929 and 1948 Conventions are no longer recognized by the Coast Guard. U.S. vessels with valid SOLAS 60 certificates may retain them until their expiration. All U.S. SOLAS certificates issued after 25 May 1980 must be in accordance with SOLAS 74. Certificates issued after 1 June 1981 must be in accordance with SOLAS 74/78. The Coast Guard will continue to accept valid SOLAS 60 certificates held by vessels whose administrations are parties to SOLAS 60 but have not ratified SOLAS 74, or that issued such certificates prior to 25 May 1980.

B. REFERENCES

1. International Conventions and Conferences on Marine Safety

The International Conventions and Conferences on Marine Safety publication contains the texts of the 1948 SOLAS Convention (including a summary of committee reports and background information) and the 1960 Convention. Each marine safety unit must maintain International Conventions and Conferences on Marine Safety, COMDTINST M16707.1, as required by the Directives, Publications and Reports Index, Commandant Notice (COMDTNOTE) 5600.

2. SOLAS 74/78 Protocols with Amendments

The SOLAS 74/78 Protocols with Amendments publication contains the text of International Convention for the Safety of Life At Sea (SOLAS) 74 and the 1978 Protocol and Amendments. It may be purchased through local sources.

3. Implementing Regulations

SOLAS 74/78 requirements generally are incorporated in Title 46, CFR without specific mention of the Convention. Among the regulations that do make specific mention of SOLAS 74 and its application are:

TYPE	CFR CITATION
All Vessels	46 CFR 2.01-25
Tank Vessels	46 CFR Table 30.01-5(d) footnote 6, 30.01-5(e)(1), & 31.40
Passenger Vessels	46 CFR Table 70.05-1(a) footnote 6, 70.05-3(b)(1), 70.05-10, and 71.75
Cargo and Miscellaneous Vessels	46 CFR 90.05-1(a)(1), Table 90.05-1(a) footnote 6, 90.05-10, and 91.60
Small Passenger Vessels	46 CFR 175.05-1, Table 175.05-1(a) footnote 6, 175.05-1(c), and 176.35
Oceanographic Research Vessels	46 CFR Table 188.05-1(a) footnote 6, 188.05-10, 188.10-35, and 189.60

C. CERTIFICATES ISSUED UNDER SOLAS 74/78

See MSM Volume II, Material Inspections, COMDTINST M16000.7A (series), Section A, Chapter 3.

D. APPLICATION FOR CONVENTION CERTIFICATES

1. Application to the OCMI

To apply for a SOLAS Passenger Ship Safety Certificate (PSSC), Cargo Ship Safety Equipment (SEC) and/or a Cargo Ship Safety Construction Certificate (SAFCON), or Exemption Certificate, the master, owner, or agent of a vessel must submit an Application for Inspection of U.S. Vessel, Form CG-3752. The application must indicate all certificates desired. If the request is for a SAFCON, it must also state whether the Coast Guard or a Coast Guard Authorized Classification Society (ACS) will issue it.

2. OCMI's Acknowledgement of Application

a. Passenger vessels. To acknowledge the application for SOLAS certificates, the OCMI must use the Notice of Completion of Examination for Safety Certificate, Form CG-969. A vessel may show this document to explain the lack of a valid Passenger Ship Safety Certificate if the vessel does not receive the certificate before sailing.

b. Cargo, tank, and miscellaneous vessels. Notice of Completion of Examination for Safety Certificate, Form CG-969 is not applicable to applications for SECs. A SEC must be issued by the OCMI before the vessel sails.

3. Application to the FCC

To apply for a Safety Radiotelephony/Radiotelegraphy Certificate or Exemption Certificate, the master, owner, or agent of a vessel should forward a written application to the local FCC office.

E. COORDINATION OF SOLAS BY THE FCC

1. Passenger Vessels

a. General. The Coast Guard and FCC jointly conduct the inspection of a passenger vessel for issuance of a Passenger Ship Safety Certificate.

(1) The certificate will only be issued after the Commandant receives inspection reports from the OCMI and the FCC. The FCC has agreed to coordinate its radio equipment inspections (including those of portable lifeboat radio apparatus) with inspections conducted by the Coast Guard.

(2) Refer to 47 CFR 80.59 for FCC compulsory vessel inspection requirements.

(3) Administration. After receiving an application for a COI renewal or Passenger Ship Safety Certificate, the OCMI must notify the local FCC office of the Coast Guard's anticipated inspection completion date.

(a) If the Coast Guard inspection will be completed at that port, the FCC inspection will normally be carried out on the date indicated by the OCMI.

(b) If the Coast Guard inspection will not be completed and the vessel's COI not renewed prior to the vessel's non-international voyage on the high seas, the FCC should conduct their inspection at least one business day before the sailing date.

(4) Issuance of Exemption Certificate. Once the FCC has completed their inspection, they will forward a copy of a Certificate of Compliance, Form 806 or a Letter of Exemption to the OCMI. The OCMI must forward the FCC document, Notification of Approval for Passenger Ship Safety Certificate, Form CG-969A, and a copy of the vessel's current COI to Commandant (CG-CVC). A SOLAS Exemption Certificate modifying the part of the Passenger Ship Safety Certificate covering radio equipment will only be issued upon FCC request.

2. Cargo, Tank, and Miscellaneous Vessels

The FCC conducts annual SOLAS inspections of radio equipment (including portable lifeboat radio equipment) aboard cargo, tank and miscellaneous vessels. These normally occur in conjunction with the Coast Guard inspection for certification or the mandatory annual survey.

F. ISSUANCE OF CONVENTION CERTIFICATES

1. Passenger Vessels

Once a vessel has satisfactorily completed the SOLAS inspection, the OCMI completes, Notification of Approval for Passenger Ship Safety Certificate, Form CG-969A. When the master, owner, or agent of a vessel submits a written request for exemptions from SOLAS inspection requirements, the OCMI must list any recommended exemptions on the reverse side of Notification of Approval for Passenger Ship Safety Certificate, Form CG-969A and verify that the vessel has a valid Load Line Certificate. Copies of FCC a Certificate of Compliance, Form 806 (or the Exemption Letter) and the vessel's COI are forwarded to Commandant (CG-CVC) with Notification of Approval for Passenger Ship Safety Certificate, Form CG-969A

2. Cargo, Tank, and Miscellaneous Vessels

a. Cargo Ship Safety Equipment Certificates (SEC). Once a vessel has satisfactorily completed the SOLAS inspection, the OCMI or ACS issues the vessel a SEC and its Attachment. If the vessel is a tanker, it will also

be issued a Supplement. The vessel must have the certificate aboard prior to sailing on an international voyage. This certificate is valid for 5 years.

b. Cargo Ship Safety Construction Certificates (SAFCON). Once a vessel has satisfactorily completed a SOLAS inspection requested by a vessel owner/operator, the OCMI or ACS issues a SAFCON and Attachment.

(1) If the vessel is a tanker a certificate Supplement must also be issued.

(2) As with the SEC, this document must be aboard the vessel prior to its sailing on an international voyage. It is valid for 5 years.

(3) Tankers over 10 years of age must undergo an intermediate survey, including drydocking, at the midpoint of this certificate's validity. Drydock requirements should be maintained in accordance with the regulations.

c. Exemption requests. When a vessel requests exemptions from the provisions of SOLAS requirements, the OCMI must forward the request with a recommendation to Commandant (CG-543). SOLAS certificates must not be issued until either the Commandant has issued an Exemption Certificate or the vessel has attained compliance with the SOLAS requirements.

---

3. Special Requirements for Ships Carrying Dangerous Goods

a. COI endorsement in lieu of separate SOLAS documentation. SOLAS Regulation II-2/19.4 requires the flag administration to provide a vessel with appropriate documentation as evidence of compliance with the construction and equipment requirements for ship types and cargo spaces carrying dangerous goods. Currently, U.S. ships complying with SOLAS Regulation 19 do not receive documentation other than the COI. Therefore, the following guidance is provided.

NOTE: The 1981 Amendments to SOLAS extended the applicability of Regulation 19 to cargo ships of less than 500 GT constructed on or after 01 February 1992 (See Reg. 54.1.1).

(1) SOLAS applicability for existing ships depends upon the date of a vessel’s keel laying. The 1981 amendments, which included the revised text of SOLAS II-2, Regulation 19, went into effect on September 1,

1984. Vessels built before that date do not need to comply with the amendments unless they undergo repairs, alterations, or modifications of a major character as defined in SOLAS, Chapter II-2, Regulation 3.

(2) SOLAS amendments would be applied by the flag administration to existing vessels without SOLAS documents on a case-by-case basis insofar as is practicable. A COI endorsement is appropriate to serve as evidence of compliance with SOLAS Regulation 19.

(3) The COI endorsement should read as follows:

"Construction and equipment meet the special requirements of SOLAS 1974, as amended, Regulation II-2/19 for carrying dangerous goods (packaged hazardous materials) as set forth below:

Cargo hold numbers #,#,#, and #: Dangerous goods of IMO hazard classes X, X, X.*

Weather decks: Dangerous goods of International Maritime Organization (IMO) hazard classes X through X, X and X.*

*The carriage of all dangerous goods, including those of IMO hazard class 7 which is not covered by SOLAS II-2/19, must be in accordance with the provisions and limitations of the current edition of the International Maritime Dangerous Goods (IMDG) Code for the specific dangerous goods."

(4) For the COI endorsement, the OCMI will determine which hazard classes the vessel is found suitable to carry in its cargo holds based on determination of compliance with Regulation 54.

G. EXTENSION OF SOLAS CERTIFICATES BY CONSULAR OFFICERS

SOLAS 74/78, Regulation 14, Chapter I, provides for extensions of Convention certificates by a vessel’s Administration if the vessel is not in a port of that country when the certificate expires. The purpose of this extension is to permit, when reasonable, a vessel to transit to another port where SOLAS inspections may be conducted. If the Safety Construction Certificate was issued for a 5-year period, no extension is permitted. The procedure for extending U.S. vessel SOLAS certificates is in the Department of State's Foreign Affairs Manual, Volume 7 (Special Consular Services), as follows:

"524.6-3. Extension or Reissue of Certificates. When an international certificate issued under the terms of the International Convention for the Safety of Life at Sea to a vessel of the United States expires before or at the time the vessel reaches a foreign port or will expire before the vessel reaches a port of the United States, it may be extended by the consular officer, or a new certificate may be issued by authorities of a foreign government which is a party to the Convention, according to the preference of the master. The request must come from the master. A request of preference expressed by the agent of a United States vessel should not be honored unless the agent is acting at the master's specific request."

H. SOLAS ANNUAL SURVEY REQUIREMENTS

At a minimum, the scope of periodic or annual inspections must satisfy all SOLAS survey requirements. The following summary of SOLAS survey requirements is adapted from the IMO Assembly Resolution containing the Guidelines under the Harmonized System of Survey and Certification (HSSC).

1. Requirements

The 1978 SOLAS Protocol, Chapter 1, Regulation 6(b), requires annual surveys of all cargo and tank vessels issued SAFCONs and SECs. There are additional requirements for tank vessels over 10 years old.

2. Purpose

Mandatory surveys as prescribed in SOLAS 74/78 Chapter 1 Part B, ensure that a ship and its equipment are satisfactorily maintained in accordance Chapter 1, Regulation 11. Periodic and annual inspections enable the Coast Guard to verify the condition of vessels and their equipment. The below inspection provisions are not necessarily applicable to all types and sizes of ships.

3. When Required

A periodic or annual inspection should be held within 3 months before or after the anniversary dates of the SAFCON Certificate.

4. Scope

The exact scope of each inspection depends on the condition of the ship and its equipment.

a. The inspection should generally consist of a certificate examination, a visual examination to confirm that no unapproved modifications have been made to the vessel and its equipment, and examination and testing of vessel equipment to confirm that it is being properly maintained.

b. The inspection should include examination of the following:

• Certificate and logbook	• Firefighting equipment
• Hull and watertight integrity	• Navigational equipment
• Machinery and electrical	• Cargo equipment
• Lifesaving equipment	• Tanker operational requirements

c. Further examination and testing should be conducted if there is any doubt as to the condition of the vessel or its equipment maintenance.

5. Certificate and Logbook Examination

The certificate and logbook examination is required to ensure that certificates are valid and required entries are being made in logbooks.

a. Certificates to be checked are--

(1) All required SOLAS safety certificates;

(2) International Load Line Certificate; and

(3) Certificates issued by a classification society on behalf of the Coast Guard.

b. Lifesaving equipment records and logbook entries should be examined to--

(1) Confirm that any new equipment has been properly approved before installation, and that no changes have been made that would affect the validity of the SEC;

(2) Check that all instructions and/or notices, including the emergency station muster list, are properly posted and printed in a language understood by all personnel on board; and

(3) Check whether any fire necessitating the operation of the fixed fire extinguishing systems or the portable fire extinguishers has occurred on board since the last inspection.

c. Hull machinery and equipment certificates and records should be checked for the required examinations of--

(1) Automatic and remote control systems, such as main propulsion automatic systems; and

(2) Inert Gas Systems (IGS).

d. Logbook entries should be checked for required entries. These include the following:

(1) Entries required by SOLAS 74/78, Chapter III, Regulation 19 and 20, such as--

(a) The date of the last full muster of crew for boat and fire drill;

(b) The records indicating that lifeboat equipment was examined and found to be complete; and

(c) The last occasion the lifeboats were swung out, and which ones were lowered into the water.

6. Hull

A general examination of the hull and its closing appliances is required at annual inspections. This includes the following:

a. All closing appliances, scuppers and sanitary discharges, and means for protection of the crew according to the requirements of the 1966 Load Line Convention.

b. Examination of anchoring and mooring equipment, as far as practicable.

c. Examination and testing (locally and remotely) of all watertight doors in watertight bulkheads, as far as practicable.

d. Examination of watertight bulkhead penetrations, as far as practicable.

e. Confirmation that no significant changes have been made to the arrangement of structural fire protection.

f. Confirmation of the operation of manual and/or automatic fire doors, where fitted.

---

7. Machinery and Electrical

A general examination of machinery and boiler spaces, particularly the propulsion system, auxiliary machinery, and the fire and explosion hazards, is required at annual inspections. This includes the following:

a. Confirmation that escape routes are not blocked.

b. Examination and operational testing of all main and auxiliary steering arrangements, including their associated equipment and systems.

c. Testing of all the means of communication between the navigating bridge and the machinery control positions, as well as between the bridge and the alternative steering position, if fitted.

d. Examination, as far as practicable, of the bilge pumping systems and bilge wells including operation of pumps, remote reach rods and level alarms, where fitted.

e. External examination of boilers, pressure vessels, and their appurtenances, including safety devices, foundations, controls, relieving gear, high pressure and steam escape piping, insulation, and gauges.

f. Visual and operational examination, as far as feasible, of electrical machinery, emergency sources of power, switchgear, and other electrical equipment.

g. Confirmation, as far as practicable, of the operation of all emergency sources of power normally and also in the automatic mode, if they are automatic.

---

8. Lifesaving Equipment

Inspection of the lifesaving gear and equipment should include:

a. Examination of all lifeboats, davits, embarkation arrangements, and launching gear. If practicable, one of the lifeboats should be lowered to the water.

b. Testing to confirm that the engine of each motor lifeboat starts satisfactorily, in both ahead and astern operation (as permitted by cargo handling conditions).

c. Checking that the inflatable liferafts have been serviced during the past 12 months, unless it is determined that the servicing has not been possible.

d. Checking that stowage of the inflatable liferafts will facilitate proper release and that launching instructions are posted.

e. Examination of the embarkation arrangement of inflatable liferafts and, when provided, the launching arrangement of davit launched liferafts.

f. Checking that lifeboats are in good condition, that the required number are fitted with self-igniting lights and self-activating smoke signals, and that all are properly stationed.

g. Checking that the rescue boat (if required) is in good condition and that stowage will facilitate rapid launching.

h. Checking for proper stowage of life jackets and random examination of their condition.

i. Checking that ship and lifeboat distress signals and the line-throwing rockets are not out of date.

j. Testing of the emergency lighting and general alarm system.

---

9. Firefighting Equipment

Inspections of firefighting equipment should include the following:

a. Confirmation that fire control plans are properly posted.

b. Examination and testing, as feasible, of the fire and/or smoke detection system(s).

c. Examination of the fire main system and confirmation that each fire pump, including the emergency fire pump, can be operated so that the two required powerful jets of water can be produced simultaneously from different hydrants.

d. Confirmation that fire hoses, nozzles, applicators and spanners are in good working condition and stowed in their correct locations.

e. Examination of fixed firefighting system controls, piping, instructions and marking, checking for evidence of proper maintenance and servicing, including date of last systems tests.

f. Confirmation that all semi-portable and portable fire extinguishers are in their stowed positions, checking for evidence of proper maintenance and servicing, conducting random check for evidence of discharged containers;

g. Confirmation, as far as practicable, that the remote controls for stopping fans and machinery and shutting off fuel supplies in machinery spaces are in working order;

h. Examination of the closing arrangements of ventilators, funnel annular spaces, skylights, doorways and tunnels, where applicable; and

i. Confirmation that the firemen's outfits are complete and in good condition.

---

10. Navigational Equipment

Inspections of navigational equipment should include verification of the following:

a. Navigation lights, shapes, and sound signaling equipment are in order.

b. The compass deviation record book is properly maintained and that the daylight signaling lamp is in order.

c. The radars, echo depth-sounding device, automatic radar plotting aid (ARPA), and gyro-compass are in working order.

d. Pilot ladder/hoists are in good condition and operational.

e. Nautical charts and publications necessary for the intended voyage are available and updated.

---

11. Tankers

Tankers are subject to additional inspection requirements. For tankers, the following areas and equipment should be examined:

a. Weather deck and equipment examinations should include examination of the following:

(1) Cargo tank openings, such as gaskets, covers, coamings, and screens.

(2) Pressure/vacuum valves and flame screens on cargo tanks.

(3) Flame screens on vents to all bunker, oily ballast and oily slop tanks and void spaces, as far as practicable.

(4) Cargo, crude oil washing, bunker, ballast and vent piping systems, including vent masts and headers.

(5) Inspection should confirm that all electrical equipment in dangerous zones is in good condition and has been properly maintained.

b. Cargo pumproom inspections should include the following:

(1) Confirmation that potential sources of ignition in or near the cargo pumproom, such as loose gear, excessive product in bilges, excessive

vapors, combustible materials, etc., are eliminated, and that access ladders are in good condition.

(2) Confirmation that all electrical equipment is in good condition and has been properly maintained.

(3) Examination of all pumproom bulkheads for signs of oil leakage or fractures and, in particular, the sealing arrangements of all penetrations of pumproom bulkheads.

(4) Examination of the condition of all piping systems.

(5) Examination, as far as practicable, of cargo, bilge, ballast, and stripping pumps for excessive gland seal leakage; verification of proper operation of electrical and mechanical remote operating and shutdown devices, and pumproom bilge system, and that pump foundations are intact.

(6) Confirmation that the pumproom ventilation system is operational, ducting intact, dampers operational, and screens clean.

(7) Verification that installed pressure gauges on cargo discharge lines and level indicator systems are operational.

c. IGS inspections should include the following:

(1) External examination of the condition of all piping and components for signs of corrosion or gas/effluent leakage.

(2) Confirmation of the proper operation of both inert gas blowers.

(3) Observation of the operation of the scrubber room ventilation system.

(4) Checking of deck water seal for automatic filling and draining, presence of water carry-over, and condition of the non-return valve.

(5) Examination of the operation of all remotely operated or automatically controlled valves and, in particular, the flue gas isolating valve(s).

(6) Observation of a test of the interlocking feature of soot blowers.

(7) Observation that the gas pressure regulating valve automatically closes when the inert gas blowers are secured.

(8) Checking, as far as practicable and using simulated conditions when necessary, the following alarms and safety devices of the IGS:

(a) High oxygen content of gas in the inert gas main.

(b) Low gas pressure in the inert gas main.

(c) Low pressure in the supply to the deck water seal.

(d) High temperature of gas in the inert gas main.

(e) Low water pressure to the scrubber.

(f) Accuracy of portable and fixed oxygen measuring equipment by means of calibration gas.

d. Inspection should also involve the following:

(1) External examination of piping and cutout valves of cargo tank and cargo pumproom fixed firefighting system.

(2) Confirmation that the deck foam system and deck sprinkler system are in proper operating condition.

---

12. Requirements for Tankers Over 10 Years Old

a. General. SOLAS 74/78, Chapter 1, Regulation 10(a)(ii), contains additional inspection requirements for tankers over 10 years old. "A tanker of ten years of age and over shall undergo a minimum of one intermediate survey during the period of validity of its SAFCON. In cases where only one such intermediate survey is carried out in any one certificate validity period, it shall be held not before 6 months prior to, nor later than 6 months after, the halfway date of the certificate's period of validity."

b. Scope. For tankers over 10 years of age, the intermediate survey should be sufficiently extensive to ensure that the ship can be operated safely and is in compliance with and should continue to possess its SAFECON certificate. The intermediate survey of hull, machinery, and equipment should consist of all the relevant items for all vessels and, at a minimum, the following additional items:

(1) Hull.

(a) Examination of the shell, including bottom and bow plating, keel, stem, stern frame, and rudder.

(b) Rudder bearing clearance measurements.

(c) Examination of the propeller and shaft seals, as far as practicable.

(d) Propeller shaft(s) bearing clearance measurements.

(e) Examination of the sea connections and overboard discharge valves and their connections to the hull.

(f) Examination of anchoring and mooring equipment as far as practicable. The anchors should be partially lowered and raised using the windlass.

(g) Internal examination of at least two cargo tanks.

(h) Examination of cargo, crude oil washing, bunker, ballast, steam, and vent piping, as well as vent masts and headers. If there is any doubt as to the condition of the piping, it may be required to be pressure tested, gauged, or both. Particular attention should be paid to any repairs, such as welded doublers.

(2) Machinery and electrical.

(a) General examination of machinery and boiler spaces, including tank tops, bilges, cofferdams, sea suctions, and overboards, with particular attention to the propulsion system and fire and explosion hazards. Examination should confirm that emergency escape routes are not blocked.

(b) Ascertain that the annual examinations of boilers and other pressure vessels have been carried out as required, and that safety devices, such as for boilers, have been tested.

(c) General examination of the electrical equipment and cables in dangerous zones, such as cargo pump rooms and areas adjacent to cargo tanks, for defective explosion proof lights and fixtures, improperly installed wiring, non-approved lighting and fixtures and dead ended wiring, and testing the insulation resistance of the circuits. Except in cases where a proper record of testing is maintained, consideration should be given to accepting recent readings by the crew. If any of the readings are marginal, or if the condition of the cables, fixtures, or equipment, appears defective in any way, verification measurements may be required. These measurements should not be attempted until the ship is in a gas-free or inerted condition and should be carried out within an acceptable time period.

---

13. Completion of SOLAS Annual Inspection

a. After a vessel has satisfactorily completed its survey, the OCMI or his or her authorized representative should complete the SAFCON and/or SEC endorsement (see MSM Volume II, Materials Inspection, COMDTINST M16000.7A (series), Chapter A3). For ACS issued certificates, the ACS should provide any necessary supplements and endorsements.

b. If a vessel's survey shows that its condition or its equipment is unsatisfactory, the OCMI should be guided by the requirements of the SOLAS 74/78 Chapter 1, Regulation 6(d).

I. SMALL PASSENGER VESSELS SUBJECT TO SOLAS 74/78

---

1. Drydockings

T and K boats (small passenger vessels under 100 GT) holding SOLAS certificates must have a drydock examination at least once every 12 months.

---

2. Lifeboats

SOLAS 74/78, Chapter III, requires passenger vessels to have lifeboats for 100% of persons onboard. However, an administration may permit exemptions according to the vessel's route and service. T-boats operating on International Ocean or coastwise routes may be exempted from this requirement if they are equipped with inflatable liferafts sufficient for all persons aboard. T-boats operating on lesser routes may use lifefloats or buoyant apparatus capable of accommodating all persons aboard. All T-boats must have a suitable rescue boat unless the OCMI deems this unnecessary.

---

3. Number of Passengers

a. 150 passengers or fewer. T-boats that comply with the requirements for a COI and carry 150 passengers or fewer will generally be considered satisfactory for international voyages, provided the routes of operation are limited so as to permit exemption under SOLAS 74/78, Chapter II-1, Regulation 1(c), Chapter II-2, 1(e), and Chapter III, 3(a).

b. More than 150 passengers. 46 CFR Subchapter K passenger vessels on international voyages must comply with the provisions of SOLAS 74/78, Chapter II-2. Accordingly, such vessels should not be granted major exemptions that would reduce the overall safety afforded new vessels constructed under SOLAS.

c. T-boats with overnight accommodations for 50 or more passengers. Such vessels must reasonably comply, in the OCMI's judgment, with the structural fire protection requirements of SOLAS 74/78 before an exemption will be granted. When exemptions are requested for such vessels, due consideration must be given to vessel size, route, condition, etc.

---

4. Certificates

a. General.

(1) COIs must be issued for 1 year to correspond with the Passenger Ship Safety Certificate.

(2) A vessel's initial Passenger Ship Safety Certificate (and Exemption Certificate, when appropriate) will be issued by Commandant (CG-CVC) upon receipt of Notification of Approval for Passenger Ship Safety Certificate, Form CG-969, a copy of FCC Certificate of Compliance, Form CG-806 (or Exemption Certificate), and a copy of the vessel's current COI (See F above).

(3) A vessel will not be issued an Exemption Certificate unless it has passed a Coast Guard safety certificate inspection.

(4) T-boats may not operate on international voyages without the required SOLAS safety and exemption certificates. COIs should be withdrawn if necessary to obtain compliance with SOLAS requirements.

b. Specification of route. The routes specified on a vessel's COI and Passenger Ship Safety Certificate (and Exemption Certificate, if issued) must match. If the owner requests a route specification on the FCC certificate that differs from the route indicated on the COI, Commandant (CG-CVC) will hold the safety and exemption certificates until the matter is resolved.

J. SPECIAL CONSIDERATIONS

1. Introduction

SOLAS 74/78, Chapter I, Regulation 5 provides for the substitution of equivalent fittings, appliances, or arrangements when the vessel's administration is satisfied that the substitute is as effective as the item specified in the Convention.

Unless otherwise provided, SOLAS 74/78, Chapters II-1, II-2, and III apply to new vessels.

Existing vessels are generally expected to meet requirements for construction, lifesaving appliances, etc., that are considered reasonable and practicable by the vessel's administration.

---

2. Equivalents Filed with IMO

a. Cargo vessels of 500-l600 GT, except tankers. SOLAS 74/78, Chapter III, Regulation 35 requires cargo vessels, with certain exceptions, to carry lifeboats on each side of the ship sufficient to accommodate all persons aboard and liferafts, on each side sufficient to accommodate half the number of all persons aboard. The United States has accepted an equivalent arrangement under the provisions of SOLAS 74/78, Chapter I, Regulation 5. Cargo vessels of 500-1,600 GT, except tankers, may be equipped with the following:

(1) On each side of the vessel, one or more davit-launched inflatable liferafts sufficient to accommodate all persons aboard.

(2) A minimum of one launching device on each side of the vessel. The device’s operation must not require anyone to remain aboard.

(3) Sufficient float-free inflatable liferafts to accommodate not less than one-half of all persons aboard.

(4) A motor-propelled rescue boat suitable for ocean service, with a davit or other suitable launching gear capable of launch by no more than three persons.

(5) A vessel aboard which it is not necessary for persons to board inflatable liferafts in the water or descend more than 3 m (9 ft) to the liferafts may employ a substitution. Such a vessel may have float-free inflatable liferafts on each side of the vessel sufficient to accommodate all persons aboard instead of davit-launched rafts and launching equipment.

b. T-Boats operating on routes between Florida and the Bahamas. Under SOLAS Chapter I, Regulation 5 the United States has accepted the provisions of 46 CFR, Subchapter T as equivalent to SOLAS provisions for small passenger vessels operating not more than 30 nm from land on routes between the east coast of Florida and the Bahamas, provided that they are--

(1) Of less than 100 GT;

(2) Carrying less than 50 passengers;

(3) Certificated by the Coast Guard for a 100-nm (180 km) ocean route;

(4) Equipped with inflatable liferafts for all persons aboard;

(5) Equipped with a LORAN C set and a fathometer; and

(6) Equipped with two fixed bilge pumps, which may be combination bilge/fire pumps.

NOTE: In accepting these provisions, the U.S. has taken into account the proven reliability of vessels constructed according to the requirements of Subchapter T, the sheltered nature of the area, and available search and rescue resources.

K. INSPECTION FOR MANNING REQUIREMENT EXEMPTION FOR VESSELS WITH GMDSS

In 1988, the international maritime community agreed to replace the radiotelegraph as the required installation with the Global Distress & Safety System (GMDSS), an automated ship shore distress and safety radio communications system that relies on satellites and advanced terrestrial systems.

Accordingly, the FCC adopted rules implementing the international GMDSS requirements in 47 CFR 80 for U.S. vessels in 1992.

Section 206 of the Telecommunications Act of 1996 eliminated the radiotelegraph carriage requirements for each GMDSS-equipped vessel. This includes removing the Radio Officer requirement from a vessel's manning, so long as the Coast Guard determines that the vessel has GMDSS equipment installed and in good working condition.

1. Definitions

a. Cargo Ship Safety Radio Certificate: a certificate issued after inspection confirms that a cargo ship's radio communications equipment that complies with applicable Safety Convention radio requirements.

b. Cargo ship: any ship that is not a passenger ship.

c. Global Maritime Distress and Safety System (GMDSS): a worldwide IMO maritime distress system designed to provide the rapid transfer of messages from vessels in distress to units best suited for giving or coordinating assistance. The system includes standardized equipment and operational procedures, unique identifiers for each station, and the integrated use of frequency bands and radio systems to ensure the transmission and reception of distress and safety calls and messages at short, medium and long ranges.

d. Maritime sea areas: for the purposes of GMDSS requirements, a ship's area of operations is defined as follows:

(1) Sea area A1: an area in the radiotelephone coverage of at least one Very High Frequency (VHF) coast station in which continuous Digital Select Calling (DSC) alerting, as defined by the IMO, is available.

(2) Sea area A2: an area, excluding sea area A1, in the radiotelephone coverage of at least one Medium Frequency (MF) coast station in which continuous DSC alerting, as defined by IMO, is available.

(3) Sea area A3: an area, excluding sea areas A1 and A2, in the coverage of a geo-stationary International Maritime Satellite (INMARSAT) in which continuous alerting is available.

(4) Sea area A4: an area outside sea areas A1, A2, and A3.

(5) Maritime sea areas are delineated in the IMO Publication, GMDSS Master Plan of Shore-Based Facilities (GMDSS Circ.7).

(6) Passenger Ship: any ship that carries or is licensed or certificated to carry more than twelve passengers.

(7) Passenger Ship Safety Certificate: a certificate issued by the Commandant of the Coast Guard after inspection verifies that a passenger ship complies with the requirements of SOLAS 74/78, including radio communications equipment.

---

2. Applicability

The below policy applies to U.S. cargo ships of 1,600 GT and more, and all U.S. passenger ships.

---

3. GMDSS Compliance Determination

To determine whether a vessel has the required GMDSS equipment installed and in good working condition, the OCMI must ensure that it meets the following requirements:

a. Cargo Ship Safety Radio Certificate. A vessel must carry a valid Cargo Ship Safety Radio Certificate or Passenger Ship Safety Certificate. The Certificate must be posted in a prominent and accessible place on the ship.

b. GMDSS radio operators. A GMDSS equipped vessel must carry at least two persons with GMDSS Radio Operator's Certificates for distress and safety radio communications purposes, one of whom has to be designated as the primary operator during an emergency. (As specified in 47 CFR 13.2.)

c. Maintenance requirements. Required GMDSS radio equipment must be maintained to the requirements and performance standards specified in 47 CFR Part 80. The ship's maintenance program should make explicit reference to GMDSS equipment to ensure that on-board or shoreside capabilities are taken into account.

(1) On ships engaged on voyages in sea areas Al and A2, the availability of functioning GMDSS equipment must be ensured by—

(a) Duplication of equipment;

(b) Shore-based maintenance; or

(c) At-sea electronic maintenance capability; or

(d) Any combination of these.

(2) On ships engaged on voyages in sea areas A3 and A4, the availability of functioning equipment must be ensured by using a combination of at least two of the following methods:

(a) Duplication of equipment.

(b) Shore-based maintenance.

(c) At-sea electronic maintenance capability.

(3) Maintenance methods. To determine the adequacy of the maintenance methods specified above, the OCMI must check the following:

(a) Duplication of equipment. If the vessel uses duplication of equipment, it must meet the requirements in 47 CFR 80.1105(g).

(b) Shore-based maintenance. Demonstration of shore-based maintenance should be provided in the form of a contract or other agreement between the vessel and a shore-based electronics maintenance company. The ship's master is responsible for providing sufficient information to satisfy the OCMI. Means for enforcing this requirement are still being developed and are subject to change.

(c) At-sea electronic maintenance capability. A vessel using this method must carry at least one qualified GMDSS Radio Maintainer. GMDSS Radio Maintainer must hold one of the following licenses:

i. FCC GMDSS Radio Maintainer's License.

ii. Merchant Mariner's Certificate (MMC).

iii. Appropriately endorsed STCW certificate.

iv. Scope of inspection. The FCC will determine that a vessel has GMDSS equipment installed and in good working condition.

aa. The Coast Guard inspection conducted to determine if a vessel meets the exemption requirements will include, at a minimum, the documentation check specified above in Paragraphs F.3.a through F.3.c.

bb. The OCMI may also check entries in the Radiotelephone Log to ensure that GMDSS equipment has been tested to demonstrate it is capable of meeting all distress and safety functions prior to the ship departing each port, as required by 47 CFR 80.1105(e) and 80.409(e). The OCMI may ask the master how these tests are performed.

cc. The OCMI may also ask the GMDSS operator to demonstrate an ability to communicate over at least two GMDSS systems, show that the Navigational Telex (NAVTEX) and INMARSAT SafetyNET receivers are working, or show the EPIRB built-in test works.

dd. If the OCMI has any doubts or concerns about the technical adequacy of the GMDSS equipment installation, the suitability of electrical wiring connecting components of the equipment, or the proper maintenance and efficient operation of the GMDSS equipment, they should consult with the local FCC representative before taking further action.

4. Documentation

Once the OCMI has checked the vessel for compliance with the requirements specified above and made the determination that a vessel's GMDSS equipment is installed and in good working condition, the Radio Officer requirement should be removed from the vessel’s manning and its COI endorsed with the following:

"This vessel is equipped with GMDSS and shall be provided with a minimum of two persons who possess certificates issued to them from the Federal Communications Commission attesting to their qualification in the operation of GMDSS, and if the at-sea maintenance method is chosen, at least one person possessing a certificate issued to them from the Federal Communications Commission attesting to their qualification for maintaining the GMDSS."

L. EXEMPTION REQUESTS FROM RADIO DIRECTION-FINDING (RDF) CARRIAGE REQUIREMENTS

SOLAS 74/78 requires all vessels 1,600 GT or greater, engaged on international voyages, to be fitted with a Radio Direction-Finding (RDF) equipment.

The OCMI/COTP may grant an exemption from this requirement to U.S. ships that fully comply with the GMDSS requirements contained in 47 CFR Part 80, Subpart W, and have an operable Global Positioning System (GPS) receiver installed.

---

1. Review for Exemption

Upon receipt of a request for an exemption from the RDF carriage requirements in SOLAS 74/78, the OCMI will check to ensure that the ship in question fully complies with the following requirements:

a. Compliance with GMDSS. The ship must be in full compliance with GMDSS requirements. A ship is considered in compliance with GMDSS requirements if it meets the criteria found in K of this Chapter.

b. GPS carriage. The ship must have an operable GPS receiver installed.

---

2. Issuance of Exemption

If the OCMI/COTP finds that a ship meets the requirements, an Exemption Certificate will be issued to grant the exemption. Once issued, the Exemption Certificate must be attached to the applicable Safety Certificate (either the Cargo Ship Safety Equipment Certificate or Passenger Ship Safety Certificate). Figures E2-L1 and L2 provide an example of a completed Exemption Certificate. The Exemption Certificate will include the following information:

a. The authority for this exemption is Regulation V/12(p).

b. The requirement that the ship is exempted from is Regulation V/12(p).

c. The condition on which the Exemption Certificate is granted is: “This ship must comply with the GMDSS requirements found in Title 47, Code of Federal Regulations, Subpart W.”

d. The Exemption Certificate will be valid until the Safety Certificate to which it is attached expires.

NOTE: More information on sea areas and GMDSS, including the FCC rules, may be obtained from the Office of Communications Systems, Spectrum Management Division (G-SCT-2) at (202) 267-2860, email: cgsoms@comdt.uscg.mil, or on the internet at http://www.navcen.uscg.mil/marcomms/gmdss/gmdss.htm

Figure E2.L.-1: SOLAS Exemption Certificate for GMDSS (front page)

OMB APPROVAL 2115-0056

EXEMPTION CERTIFICATE

Issued under the provisions of the

INTERNATIONAL CONVENTION FOR THE SAFETY OF LIFE AT SEA, 1974, as amended

under the authority of the Government of

THE UNITED STATES OF AMERICA

by the UNITED STATES COAST GUARD

Particulars of Ship

Name of Ship	Distinctive Number or Letters	Port of Registry

Gross Tonnage	IMO Number (Note 1)

THIS IS TO CERTIFY:

That this ship is , under the authority conferred by regulation _____

of the Convention, exempted from the requirements of: _____

_____

_____

_____

_____ of the Convention.

Note

1. In accordance with resolution A.600(15) IMO Ship Identification Number Scheme, this information may be included voluntarily.

The Coast Guard estimates that the average burden for this report is 5 minutes. You may submit any comments concerning the accuracy of this burden estimate or any suggestions for reducing the burden to: Commandant (G-MVI), U.S. Coast Guard, Washington, DC 20593-0001 or Office of Management and Budget, Paperwork Reduction Project (2115-0056), Washington DC 20503

DEPT. OF TRANSP., USCG, CG-867 (Rev. 6-93)
PREVIOUS EDITIONS ARE OBSOLETE

Page 1 of 2

Figure 9.L.-1: SOLAS Exemption Certificate for GMDSS (back page)

EXEMPTION CERTIFICATE

Conditions, if any, on which the Exemption Certificate is granted: This ship must comply with the GMDSS requirements found in Title 47, Code of Federal Regulations, Subpart W.

Voyages, if any, for which the Exemption Certificate is granted: _____

This certificate is valid until 31 DEC 00

subject to the Cargo Ship Safety Equipment Certificate,

to which this certificate is attached, remaining valid.

Issued at : Marine Safety Office, Meadow Creek, West Virginia
Place of Issue of Certificate

01 JAN 97
Date of Issue

D. Pettry, CAPT, USCG
Officer in Charge, Marine Inspection, U.S. Coast Guard

DEPT OF TRANSP USCG CG-967 (Rev. 6-93) Page 2 of 2

Figure 9.L.-2: GMDSS Exemption Evaluation Checklist

Unit:	U.S. Coast Guard GMDSS Exemption Evaluation Checklist	Date:

Vessel Name:	VIN:	MMSI:	Call Sign:

1. Documentation of Inspection. (47 CFR 80.1067)

☐ a. Has valid Safety Certificate Issue Date: _____ Expiration Date: _____

2. GMDSS Operators. (47 CFR 80.1073)

☐ a. Has at least 2 licensed GMDSS Operators (1) License #: _____ Expiration Date: _____
(2) License #: _____ Expiration Date: _____

3. Maintenance Requirements. (47 CFR 80.1105)

a. engages in voyages in:

☐ (1) Areas A1 and A2
if checked, ship must ensure availability is maintained by at least one of the methods listed in 3.b.

☐ (2) Areas A3 and A4
if checked, ship must ensure availability is maintained by at least two of the methods listed in 3.b.

b. has at least one or two of the following (as applicable):

☐ (1) duplication of equipment (complies with 47 CFR 80.1105(g))

☐ (2) demonstration of shore-based maintenance:

Company's name: _____ Effective Date: _____

Address: _____ Expiration Date: _____

_____

_____

(3) at-sea electronics maintenance capability

☐ (a) Has qualified GMDSS Radio Maintainer. Personnel holds one of the following licenses:

☐ - GMDSS Radio Maintainer's License

☐ - GMDSS Radio Operator/Maintainer's License

4. GPS Requirement (for RDF exemption only)

☐ a. Vessel is equipped with an operable GPS receiver

5. Determination:

☐ a. According to the information provided above, the ship in question **meets / does not meet** (*circle one*) the requirements for an exemption.

CHAPTER 3: SAFETY MANAGEMENT SYSTEMS (SMS)

A. INTRODUCTION

On October 19, 1996, the President signed into law the U.S. Coast Guard Authorization Act of 1996 (Public Law 104-324). Section 600 of this Act added Chapter 32 to Title 46 of the U.S. Code, entitled "Management of Vessels."

The powers of 46 U.S.C. Chapter 32 were delegated from the Secretary, Department of Transportation to the Commandant of the Coast Guard in 49 CFR §§1.46 (fff) and (ggg).

The Coast Guard developed regulations to enforce these requirements in 33 CFR Part 96.

The requirements for Safety Management Systems (SMS) are mandatory for all vessels engaged on a foreign voyage that call in U.S. ports or for all U.S. vessels engaged on a foreign voyage, and which--

a. Carry more than 12 passengers; or

b. Are 500 GT or more; and are:

(1) Oil tankers;

(2) Chemical tankers;

(3) Gas carriers;

(4) Bulk freight vessels;

(5) Other freight vessels;

(6) High speed craft; or

(7) Self-propelled mobile offshore drilling units (MODUs).

All U.S. requirements are consistent with the International Management Code for the Safe Operation of Ships and for Pollution Prevention, Chapter IX of SOLAS, (International Safety Management (ISM) Code). Vessels that on U.S. domestic routes or are engaged on foreign voyages but do not meet the above applicability may elect to receive voluntary ISM Code certification under this program.

1. References

a. The International Code for the Safe Operation of Ships and for Pollution Prevention (ISM Code), Chapter IX of SOLAS.

b. International Maritime Organization (IMO) Resolution A.788(19), Guidelines on Implementation of the International Safety Management Code (ISM) by Administrations.

c. NVIC 4-98, Port State Control Guidelines for the Enforcement of ISM Code.

d. 46 U.S.C. 3201 et. seq.

e. 33 CFR Part 96, Rules for the Safe Operation of Vessels and Safety Management Systems.

f. 46 CFR Parts 2, 31, 71, 91, 107, 115, 126, 175,176, and 189.

g. U.S. Coast Guard International Safety Management Code Job Aid for Marine Inspectors.

h. U.S. Coast Guard International Safety Management Code Job Aid for Small Passengers Vessels.

---

2. What is the International Safety Management (ISM) Code?

On November 4, 1993, the IMO adopted resolution A.741(18), International Management Code for the Safe Operation of Ships and for Pollution Prevention (International Safety Management (ISM) Code). To make compliance with the ISM Code mandatory, the IMO amended the Convention for the Safety of Life at Sea (SOLAS), 1974, by adopting Chapter IX, Management for the safe operation of ships. The IMO provided guidance on implementation of the requirements of SOLAS Chapter IX in Resolution A.788(19), Guidelines on the Implementation of the International Safety Management (ISM) Code by Administrations. 46 U.S.C. 3201 et. seq. required the development of U.S. regulations for U.S. vessel compliance consistent with the ISM Code.

---

3. Applicability

a. Compliance with the ISM Code (Chapter IX of SOLAS) and 33 CFR Part 96 is mandatory for the following U.S. and foreign vessels engaged on foreign voyages:

(1) Vessels carrying more than 12 passengers, including passenger high speed craft.

(2) Oil tankers, chemical tankers, gas carriers, bulk carriers, and freight high speed craft of 500 GT or more.

(3) Freight vessels and self- MODUs of 500 GT or more.

b. The requirements of the ISM Code are not mandatory for--

(1) Public vessels used for non-commercial purposes;

(2) Barges;

(3) Recreational vessels not engaged in commercial service;

(4) Fishing vessels; or

(5) Vessels operating on the Great Lakes or its tributary and connecting waters.

NOTE: For U.S. vessels, the public vessel exemption is defined in 46 U.S.C. 2101 and 2109, and in 33 CFR 96.210(b)(5).

c. Any U.S. vessel not required to meet 33 CFR Part 96 may voluntarily have its SMS certificated if it meets SMS requirements.

---

4. U.S. Law vs. International Convention Definitions

The terms used to describe ship types in the U.S. law and regulations differ from those used in SOLAS Chapter IX and the ISM Code. The difference is relevant only in terms of terminology use; it does not affect the types of ships that must comply.

Table 1 provides a cross reference between ship types used in U.S. law and those used in SOLAS Chapter IX.

Table 1: Terms Used in U.S. Law/Regulation and Their SOLAS Equivalents for the ISM Code	
Term used in U.S. law/regulations	**Term used in SOLAS Chapter IX**
Vessel transporting more than 12 passengers	Passenger ship
Tanker	Oil tanker, chemical tanker and gas carrier
Bulk freight vessel	Bulk carrier
Freight vessel	Cargo ship

a. Bulk carrier definition. In November 1997, the SOLAS Conference on the Safety of Bulk Carriers was held at IMO's headquarters in London. At that conference, a clarification of the SOLAS Chapter IX, Regulation 1.6 definition of "bulk carriers" was established.

(1) Only those ships which meet any of the following three definitions will be considered a "bulk carrier" for purposes of compliance with the ISM Code. Other vessels, which carry bulk cargos, but do not meet one of the three definitions, are not considered bulk carriers for the purpose of ISM.

b. Typical cross sections of the types of ships listed below are provided in Figure 1.

(1) A general bulk carrier is a ship that is--

(a) Constructed with a single deck;

(b) Constructed with top-side tanks and hopper side tanks in cargo spaces; and

(c) Intended primarily to carry dry cargo in bulk.

(2) An ore carrier is a ship that is--

(a) A single deck ship;

(b) Constructed with two longitudinal bulkheads;

(c) Constructed with a double bottom throughout the cargo region; and

(d) Intended for the carriage of ore cargoes.

(3) A combination carrier is a ship that is a tanker designed to carry oil or alternatively solid cargoes in bulk (SOLAS 74, Chapter II-2, Regulation 3.27).

FIGURE 1: TYPICAL CROSS SECTIONS FOR THE THREE TYPES OF BULK CARRIERS UNDER THE ISM CODE

General Bulk Carrier

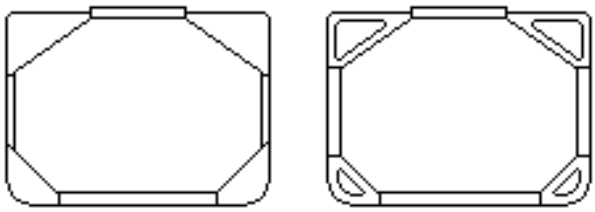

Ore Carrier

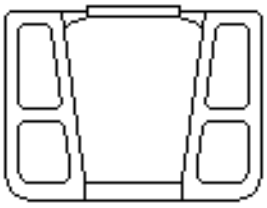

Combination Carrier

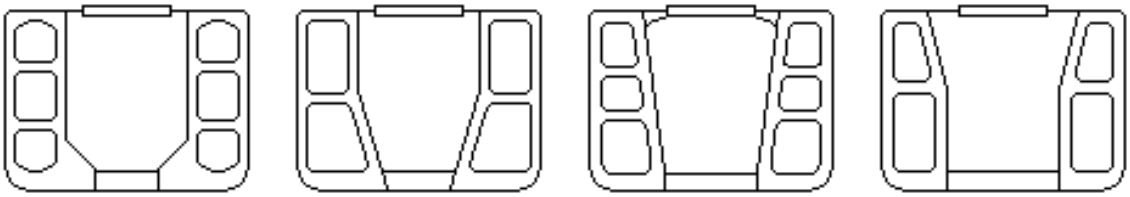

B. DISCUSSION

1. Objectives

The objectives of the ISM Code and 33 CFR Part 96 are to ensure safety at sea, prevent the occurrence of human injury or loss of life, and avoid environmental and property damage. Specifically, the ISM Code seeks to address the issues of human error. To this end, the ISM Code requires companies (or their designated representatives, such as vessel managers or bareboat charterers, who have formally assumed responsibility for vessel operations) to implement the SMS both in their shoreside management and aboard their vessels.

2. Key Elements

The implementation of a SMS requires a company to document its management procedures and policies. This ensures that conditions, activities, and tasks affecting safety and environmental protection, both ashore and on board vessels, are planned, organized, executed, and checked in accordance with regulatory and company requirements. For many companies, this means formalizing long-established processes and placing the associated documents under a greater degree of control. For others, establishing an effective SMS is a more comprehensive process.

The SMS should be used as a tool to ensure that new U.S. Federal authorities and requirements are incorporated and understood by personnel responsible for complying with them. For instance, if Federal pollution prevention or vessel safety requirements change, the SMS can be used to provide management direction to the vessel officers and crew to ensure consistent application of new requirements across a company's fleet of vessels.

Finding that such updates or amendments are not part of a SMS does not necessarily require action by the Coast Guard. The vessel company or operating company can ensure no Coast Guard action is necessary in these situations by educating their employees and documenting corrective action for continuous improvement of the system.

Key elements of the SMS include documented company procedures establishing the following:

a. A company safety and environmental protection policy.

b. Instructions and procedures to ensure that vessels are operated in accordance with relevant flag State and international regulations.

c. Defined levels of authority and lines of communication between and among shore and vessel personnel.

d. Procedures for reporting accidents and non-conformities with the provisions of the ISM Code.

e. Procedures for preparing for and responding to emergencies.

f. Procedures for internal audits and management reviews.

---

3. SMS Documents

The documents used to describe and implement the SMS may be referred to as the safety management manual. Companies are not required to keep the documentation in a manual form but may choose to maintain the documentation in the form they consider most effective. Whatever form they choose to keep their SMS, the information in it must be readily available to all the persons who are required to understand and apply that system in the course of their normal duties both ashore and afloat.Companies must establish and maintain procedures for the control of their SMS documentation. These controls must ensure that--

a. Valid documents are available at all relevant locations (including all vessels);

b. Changes to documents are reviewed and approved by authorized personnel; and

c. Obsolete documents are promptly removed.

---

4. SMS Certification Process

Certification of a SMS for a vessel requires the vessel's flag administration to make two determinations: first, that the company responsible for the vessel has implemented a SMS that complies with the requirements of the ISM Code (33 CFR Part 96 for U.S. vessels) and, second, that the vessel is being operated in accordance with the approved SMS.

Simply put, an effective SMS can be reduced to this simple philosophy : " say what you do, do what you have said and be able to prove it!" A goal of the ISM Code is to define a process of continuous communication, training, and actions that constantly maintain the vessel in a state of full compliance with safety and environmental protection regulations.

The ISM Code does not prescribe the manner in which this must be done, rather it allows companies to define their own way of reaching that goal. There is no one right way to do this because each successful SMS must be built to fit the individual company culture, organization, service and work environment. What may work for one company may not work for another.

Inspectors and auditors must therefore be vigilant for companies that attempt to buy a SMS that was designed for someone else or that is a generic off-the-shelf program. A SMS that only exists to satisfy what the company sees as just another regulation, for yet another manual that will sit on the shelf, is not the spirit of the ISM Code. Certified auditors and vessel inspectors will quickly identify these short cut attempts to fulfill the intent of the ISM Code.

---

5. SMS Audit Process

Every initial ISM Code certification audit will be in two parts.

First, an auditor from an authorized organization acting on behalf of the flag administration will perform an external audit of the company's SMS and onshore operations. The company office audit comes first because the overall use of the system defines the SMS for the company's personnel, whether they are shoreside or vessel employees.

Once the company has successfully completed its external certification audit, the company, or any person that has assumed or agreed to assume responsibility for operation of the vessel from the company, will be issued a Document of Compliance (DOC) certificate. The company must receive a DOC before auditors can proceed to the second part of the audit.

For the second part of an initial ISM Code certification audit, the company's vessel(s) will be audited on their use of the SMS. Each individual vessel that comes under the company DOC and is found to be operating in accordance with a shipboard SMS that meets the required elements of the ISM Code, will be issued a Safety Management Certificate (SMC). A vessel's compliance with the ISM Code, is always dependent on it being operated by a company holding a valid DOC. For this reason, a copy of both the company's DOC and the original of the vessel's SMC must be maintained onboard the vessel for viewing by flag-state inspectors or port state control officers.IMO Resolution A.788(19) provides guidance on the requirements for the issuance of these certificates, including specific guidelines for the issuance of interim certificates.

---

6. Document of Compliance (DOC) Certificates and Safety Management Certificates (SMCs)

a. Document of Compliance (DOC) certificates. A company is issued a DOC following a satisfactory external audit of a company's SMS. The SMS must be in effect for a minimum of 3 months prior to the issuance of the initial DOC.

(1) The external audit determines whether the SMS complies with the requirements of the ISM Code and/or 33 CFR Part 96, and is effectively implemented and used by the company's personnel.

(2) The DOC is valid for the types of vessels on which the company's initial verification audit is based. It should be issued for no more than 5 years (60 months) and is subject to annual verification audit within 3 months before or after each anniversary of the certificates issuance date.

(3) Many U.S. vessels are owned by non-maritime interests such as a bank or a large parent corporation. Typically, these institutions do not take a direct hand in the operation of the vessel; their interest is confined to finance. Because of this limited involvement with the vessel's day-to-day operation, these companies may not want to be part of the SMS. Section 3.1 of the ISM Code requires a company to designate, in writing, the person or company that will act for the company for the purpose of the SMS (this is most always the vessel's operating company).

(4) Delegation is allowed by the ISM Code and 33 CFR Part 96, provided a letter of designation has been issued by the company of record to the flag administration designating the company for the SMS. For U.S. vessel(s), this company designation letter is maintained at Commandant (CG-CVC), with a copy to the designated company.

(5) Inspectors should note that the company listed on the Certificate of Inspection (COI) might not always be the company listed on the DOC.

(6) For companies that do take a direct and continuing hand in the day-to-day operation of a vessel, delegation of SMS responsibility to another party would not be appropriate.

b. Safety Management Certificates (SMCs). A vessel is issued an SMC following an initial audit that verified its SMS is in compliance with the requirements of the ISM Code and/or 33 CFR Part 96.

(1) The SMC cannot be issued unless the DOC of the company responsible for the operation of the vessel is valid, applicable to a vessel type listed on the DOC, and acceptable to the flag administration of the vessel if issued by a different organization. If the DOC was issued by a different organization, the SMC should include a statement acknowledging the acceptance of the DOC.

(2) The external audit must also show that the SMS has been effectively implemented by the vessel's personnel for a minimum of 3 months prior to the initial audit.

(3) The SMC is valid for 5 years and requires an intermediate external audit and endorsement on the back of the certificate between the second and third anniversary date of the issuance of the SMC.

---

7. Interim Certificates

a. Interim DOC Certificate. An interim DOC is valid for a period of no more than 12 months. The period of validity cannot be extended. An interim DOC cannot be reissued after a 12 month period.

(1) During the 12 month period of the validity of the interim certificate, the responsible person should ensure that the necessary audits are completed so that the company can be issued a final DOC.

(2) An interim DOC may only be issued to facilitate implementation of the ISM Code when a company is newly established or when vessel types are added to an existing SMS and DOC. The purpose of an interim DOC is to allow the company time to completely integrate its operations as a new company or to incorporate a new vessel or vessel type into its SMS capabilities.

(3) The interim DOC certificate should be issued only after the company has demonstrated that it has an SMS that meets the objectives of Section 1.2.3 of the ISM Code. The company's SMS is expected to meet the full requirements of the ISM Code within the period of validity of the interim DOC certificate.

b. Interim Safety Management Certificate (SMC). An interim SMC is valid for a period of no more than 6 months and may be only issued to new vessels on delivery or when a company takes responsibility for an existing vessel that is new to the company. An interim SMC should only be issued when the vessel's flag administration, or a recognized organization acting on the flag administration's behalf, has verified the following:

(1) The responsible company's DOC or interim DOC is relevant to that type of vessel.

(2) The SMS includes key elements of the ISM Code and has either been assessed during the responsible company's external DOC audit or demonstrated during the company's evaluation for an interim DOC.

(3) The master and relevant senior officers are familiar with the SMS and the plans for its implementation.

(4) Essential instructions or procedures are provided to the vessel crew prior to sailing.

(5) The responsible company has confirmed an audit date for the vessel within 3 months.

(6) The information relevant for the SMS is in a working language or languages understood by the vessel's crew.

c. An interim SMC can be extended up to an additional 6 months from the date of expiration in exceptional circumstances. This is contingent upon specific flag administration approval. For U.S. vessels, this must be approved by Commandant (CG-CVC).

C. COAST GUARD ENFORCEMENT

The Coast Guard's ISM Code enforcement policy is divided into two major areas of responsibility. The first area is ensuring compliance of U.S. flag vessels with the ISM

Code. The Coast Guard is the flag administration agency for U.S. vessel implementation and enforcement of the ISM Code. The Coast Guard administers this responsibility through a delegation to recognized and authorized organizations. The second area of responsibility is verification of ISM Code compliance on foreign vessels entering U.S. ports. For detailed guidelines for the enforcement of the ISM Code on foreign vessels subject to the U.S. Port State Control program, see NVIC 04-05 A thorough review of this chapter, NVIC 04-05, and 33 CFR Part 96 is recommended for all enforcement personnel. The remainder of this chapter will address the U.S. vessel program only.

---

1. Jurisdiction - Flag State

Applicability of the ISM Code to U.S. vessels by service and route is specified in the applicable subchapter of Title 46 CFR. If a vessel is required to have ISM certification, specific certification must be in accordance with the provisions of 33 CFR Part 96 and Chapter IX of SOLAS. On U.S. vessels, ISM Code audits and issuance of ISM Code certificates are performed exclusively by organizations recognized and authorized by Commandant, in writing, to act on behalf of the United States. These organizations must meet specific requirements as specified in 46 CFR Part 8 and 33 CFR Part 96, Subpart D. Officers in Charge, Marine Inspection (OCMIs) do not perform ISM Code audits or issue ISM Code certificates.

---

2. General Guidelines for Enforcement on U.S. Vessels

a. To obtain ISM certification, as defined in 33 CFR Part 96, a company must select one of the organizations authorized by the Commandant to issue certificates. The company may obtain a list of such organizations from the OCMI. Commandant (CG-ENG) maintains an up to date list and can answer questions that arise regarding the authorization of an organization by the Coast Guard.

b. To apply for a SMS certification waiver or extension or request approval for an equivalence to satisfy compliance with 33 CFR Part 96 (the ISM Code), a company should route their request through the authorized ISM Code-certification organization they have contracted. The organization will provide their recommendation for approval or denial and forward the request to Commandant (CG-CVC) for final approval or denial.

c. Commandant (CG-CVC) and Commandant (CG-5P-TI) oversee authorized organizations. They work with OCMIs to ensure that ISM Code audits and certifications are carried out in accordance with the provisions of law, regulation,

international convention, and written agreement between the Coast Guard and the authorized organization.

d. Several authorized organizations may be selected to act on behalf of the Coast Guard for issuance of ISM Code certificate.

e. NVIC 04-05 includes checklists and guidelines that can be a useful tool for marine inspectors checking foreign vessels for ISM Code safety management system compliance.

f. The Coast Guard has developed a job aid (quick reference guide) to provide marine inspectors with general knowledge of ISM Code requirements. This job aid is maintained by the Marine Inspection and Investigation School (t-mii) at RTC Yorktown and is included as part of the marine inspector course.

g. Vessels that do not have a master. On a U.S.-certificated vessels manned by a Person-in-Charge (PIC) in the place of a master (most likely a barge), the PIC is responsible for all of the duties and functions that the ISM Code and the vessel's SMS require of a master.

---

3. Legal and Regulatory Authority for U.S. Vessels

Legal authority for enforcing the ISM Code on U.S. vessels is contained in 46 U.S.C. 3203. Regulations for the applicability and implementation of the ISM Code are contained in 33 CFR Part 96, Subparts A, B and C. Vessel-specific Subchapters in Title 46 CFR include SMS requirements for specific vessel types.

---

4. Voluntary Compliance by the U.S. Domestic Fleet

U.S. vessels engaged on foreign voyages and subject to SOLAS must comply with the ISM Code. There is a group of U.S. vessels that are not subject to SOLAS and, therefore, not required to comply with the ISM Code. This group of vessels includes those engaged only on domestic voyages and government–owned, non-commercial vessels operated by the U.S. Navy's Military Sealift Command or the U.S. Maritime Administration Ready Reserve Force.

The Coast Guard seeks to encourage these vessels to voluntarily comply, to the maximum extent possible, with the SMS requirements of the ISM Code. These vessels' companies are encouraged to seek voluntary ISM Code certification and follow the guidelines for mandatory compliance.

The Coast Guard recommends that companies voluntarily complying with the ISM Code use the services of the organizations recognized and authorized by the Coast Guard for mandatory certification. This will allow the Coast Guard to provide a focused oversight program that will benefit all customers of these authorized organizations.

ISM Code certificates on these vessels are called a Statement of Voluntary Compliance (SOVC). This term describes both the DOC issued to the parent organization and the SMC issued to the vessel(s). Issuance and revocation of the SOVC is administered in a manner identical to required ISM Code certificates, however, revocation of a SOVC will not restrict the operations of any voluntarily certificated vessel.

It is not necessary for military sealift vessels in reduced operating status or engaged in unique missions to voluntarily comply with the ISM Code.

---

5. ISM Code Equivalence for Certain Small Passenger Vessels

The Coast Guard has established an equivalent to ISM Code compliance for T-boats, small passenger vessels certificated under 46 CFR Subchapter T, that must comply with the requirements of the ISM Code. These small passenger vessels, which carry more than 12 passengers on foreign voyages, must meet certain limited operation requirements to be eligible for this program. This applies only to U.S. flag vessels. The requirements are as follows:

a. For a T-boat's company to apply for equivalency under 46 CFR 175.540, the small passenger vessel's operation must be Coast Guard-certificated to carry--

   (1) No more than 150 total persons; or

   (2) No more than 49 overnight passengers.

b. The Coast Guard feels that full ISM Code certification, in accordance with 33 CFR Part 96, is too extensive for these vessels with limited company personnel, routes, and operations—therefore, an equivalent certification system was created for these vessels and companies.

c. 46 CFR 175.54 allows the implementation of an equivalent SMS onboard these small passenger vessels in lieu of the normal ISM Code certification.

d. The Coast Guard administers this program of equivalent ISM Code compliance as part of the normal scheduled inspection for certification. These small passenger

vessels and companies will not receive either a DOC certificate or a SMC. Instead, the vessel's COI will be endorsed with a statement of equivalence to the ISM Code for the specified route.

e. A "job aid" booklet and accompanying floppy disk has been produced by Commandant (CG-CVC) to guide small passenger vessel companies through the process of developing their SMS to ensure that the SMS will provide an level of safety equivalent to the ISM Code. These job aids are only a guideline.

f. The OCMI should ensure that these equivalent SMS have been customized to the vessel and company operations and procedures before completing an equivalency inspection of a SMS.

g. To apply for an equivalency under this requirement, a small passenger vessel company must write to the cognizant OCMI. The written request should communicate how the vessel's operation meets the requirements for the equivalency and include a copy of their SMS documentation (manual).

h. If the cognizant OCMI allows a small passenger vessel participate in the SMS equivalence program and its SMS has been inspected and approved by the Coast Guard, the vessel's COI must be endorsed in the vessel operating details with the following statement: "The company's and vessel's safety management system meet the requirements of Chapter IX of SOLAS through an equivalence program approved by the U.S. Coast Guard."

i. If a small passenger vessel's company does not apply for equivalency under 46 CFR Part 175, then the vessel's company is expected to contract with an authorized organization acting on behalf of the United States to complete audits and certification of the company and vessel's SMS. In these cases, Coast Guard inspectors must verify the issuance of the company's DOC and SMC by the authorized organization during normal small passenger vessel COI inspections. If a small passenger vessel does not have either these international convention certificates or an endorsement of equivalency to Chapter IX of SOLAS, the vessel's COI may only be endorsed for a route involving domestic operations.

j. Commandant (CG-CVC) monitors this equivalency program. Operations of vessels eligible to apply for this program are normally limited to 5 U.S.- OCMI inspection zones (Portland, ME, San Juan, PR, Miami, FL, San Diego, CA, and Seattle, WA). Due to the differences of vessel operation and local needs, the Coast Guard expects that local OCMIs will implement and control these programs.

k. If a port, other than ones named above, receives an application for such an equivalency from a new vessel company or a vessel moving its operation into a zone not already involved with this program, the local OCMI should contact Commandant (CG-CVC) for direction and the issuance of copies of the Coast Guard's ISM Code job aid for use by the OCMI and the vessel's company.

D. DELEGATION OF ISM CODE CERTIFICATION BY THE COAST GUARD TO RECOGNIZED ORGANIZATIONS

1. Authority for Delegation

46 U.S.C. 3103 provides the Coast Guard's authority to rely on reports, documents, and records of reliable persons as evidence of compliance with Subtitle II of 46 U.S.C., the subtitle which contains the ISM Code for SMS standards.

The December 24, 1997, ISM Code final rule delegated the function of ISM Code external audits and certifications of U.S. vessels to recognized/authorized organizations rather than perform ISM Code certification as a direct service using Coast Guard personnel (except as noted above for small passenger vessels).

2. Application Process

Recognizing and authorizing organizations to carry out ISM Code certification on behalf of the Coast Guard is the responsibility of Commandant (CG-ENG), Office of Design and Engineering Standards. An organization can achieve recognition by applying in writing to Commandant (CG-ENG) according to the requirements for application provided in 46 CFR 8.After being recognized by the Coast Guard, an organization may apply for authorization to complete ISM Code external audits and certification for U.S. vessels as outlined in 33 CFR Part 96, Subpart D.

Once an organization is authorized to act on behalf of the Coast Guard it will be added to a list of organizations available to U.S. vessels to complete actions for the Coast Guard. Commandant (CG-ENG) this list of approved organizations.

E. RECOGNITION, AUTHORIZATION, AND OVERSIGHT OF AUTHORIZED ORGANIZATIONS ACTING ON BEHALF OF THE U.S.

1. Responsibilities of the Commandant (CG-5P) Staffs

The following paragraphs describe the Coast Guard's responsibilities regarding the ISM Code.

This is provided to ensure understanding of the roles that each office of the Assistant Commandant of Marine Safety and Environmental Protection, Commandant (CG-5P) will play regarding the enforcement and compliance of U.S. and foreign vessels with the ISM Code.

a. Commandant (CG-ENG), Office of Design and Engineering Standards, will:

(1) Specify and interpret the 46 CFR Part 8 and 33 CFR Part 96 requirements for organizations applying to the Coast Guard for recognition and authorization to complete ISM Code external auditing and issuing of international certificates.

(2) When necessary, revoke recognition or authorization of an organization acting upon the behalf of the Coast Guard.

(3) Provide guidance, when such an organization's recognition or authorization is revoked, for the orderly transfer of company and vessel ISM Code certificates to another recognized and authorized organization.

(4) Maintain and publish a list of recognized organizations that are authorized to conduct ISM Code auditing and certification on behalf of the Coast Guard. (This is available on the Coast Guard Web site.)

(5) Draft and execute an agreement with each recognized and authorized organization. This agreement must specify the duties and responsibilities of the work an organization will complete under its authorization to act with the authority of the United States. The agreement must specify the duties and responsibilities of both the Coast Guard and the recognized organization, specifically, reports that must be made to the Coast Guard, as well as assurance that the Coast Guard will have access to records and information.

(a) Information access is critical to the Coast Guard's oversight of recognized and authorized organizations. This includes all of the authorized organization's information related to the delegation, such as--

i. ISM Code certificates issued, with the date of issuance and recipient's name;

ii. Names and training/qualifications records of persons performing audits;

iii. Names of companies and vessels undergoing ISM certification;

iv. External audit reports and results.

(b) As the flag administration for all U.S. vessels, the Coast Guard must have on-site and electronic access to all records regarding U.S. flag vessels receiving either mandatory or voluntary ISM certification.

b. Commandant (CG-CVC), Office of Vessel Activities, will:

(1) Establish enforcement policies and procedures for implementation of the ISM Code.

(2) Establish and maintain policies and procedures for the effective oversight of organizations authorized to perform ISM Code audits and certification under the authority of the Coast Guard. (see Paragraph F of this Chapter)

(3) Work with CG-741, CG-5P-TI, FC-51 and the Marine Inspection and Investigation School, in Yorktown to implement training and define qualifications for Coast Guard personnel with regard to ISM Code compliance and enforcement for U.S. and Port State Control programs.

(4) Conduct oversight reviews of recognized organization's headquarters, regional, and port offices to ensure compliance with the requirements of the written authorization agreement between the organization and the Coast Guard.

(5) Coordinate with Commandant (CG-5P-TI), District (p) officers, and OCMIs to ensure implementation of oversight, and provide feedback and corrective action to authorized organizations.

(6) Maintain a record of letters that show when a legal-financial company of a U.S. vessel has designated another party as the company for the purposes of ISM Code certification, SMS, and vessel management.

(7) Coordinate with Commandant (CG-ENG) on the review of organizations' applications for recognition or authorization to perform ISM Code certification under the authority of the Coast Guard.

(8) Advise Commandant (CG-ENG) when evidence exists that an authorized organization's authorization should be revoked. Upon receiving information of major non-conformities or other failures to follow Chapter IX of SOLAS or 33 CFR Part 96, take action with the cognizant OCMI to direct the suspension or revocation of the vessel's SMC or its company's DOC.

(9) Act as final agency authority regarding the granting of equivalencies, appeals or other decisions regarding the certification of a U.S. vessel or its company and its safety management system.

c. Commandant (CG-5P-TI), Quality Assurance Staff, will:

(1) Oversee by observation mandatory ISM Code audits of the DOC and SMC performed on U.S. vessels by authorized organizations and companies.

(2) Perform ISM Code compliance oversight when conducting visits onboard U.S. vessels enrolled in the Alternate Compliance Program.

(3) Establish and maintain a system of evaluation for the performance of organizations authorized for ISM Code certification.

(4) Supervise and coordinate assignment of OCMI personnel to observe ISM Code audits.

d. Commandant (CG-741), Sector Shore Forces, will—

(1) Work with Commandant (CG-CVC), (CG-5P-TI), (FC-51) and the Marine Inspection and Investigation School to implement training and define qualifications for Coast Guard personnel with regard to ISM Code compliance and enforcement for U.S. and Port State Control programs.

(2) Maintain a database of Coast Guard marine inspection personnel who have been trained, through an ISM Code lead auditor course, to perform audit observations.

---

2. Responsibilities of Authorized Organizations

Organizations authorized to act on behalf of the United States regarding the external ISM Code auditing and certification of U.S. vessels and their companies must:

a. Conduct ISM Code certification in accordance with the provisions of regulation, convention, and the authorized organization's written agreement with the Coast Guard.

b. Notify Commandant (CG-5P-TI) prior to the performance of any ISM Code-related external audit for the issuance of a company's DOC or vessel's SMC.

c. Welcome qualified Coast Guard observers assigned to accompany organization personnel during any part of the ISM Code certification and audit process. (Training, qualification and rules of conduct are addressed later in this chapter).

d. Notify Commandant (CG-CVC) of any major non-conformities issued, recommendations for suspension made, and revocation of any DOC or SMC issued under Coast Guard delegation.

e. Report any major non-conformity, suspension, or revocation of the SMC or DOC to:

(1) All authorized organizations that issue any statutory certificates to the vessel; and

(2) The Coast Guard, in accordance with the authorized organization's written agreement.

F. COAST GUARD'S ISM CODE OVERSIGHT ON U.S. VESSELS

ISM Code compliance is intertwined with nearly every other aspect of overall regulatory compliance. A basic tenant of any SMS is that the system must be in constant compliance with safety and environmental protection requirements. Because of this, vessel inspection activities will provide a means of evaluating ISM Code compliance. Compliance confirmation can take several forms, the most basic of which is verification that the vessel has a valid ISM Code SMC and copy of the company's DOC certificate.

The next level of ISM Code compliance confirmation is to identify links between any deficiencies noted during the course of routine inspections and the vessel's SMS. This requires marine inspectors to have a working knowledge of the ISM Code elements and of the duties and training of shipboard personnel. The Marine Inspection and Investigation School at RTC, Yorktown, has established a training course to help prepare the marine inspector to make these judgments. In addition, the Coast Guard has produced an ISM Code job aid. The ISM Code job aid is not a substitute for policy, it is intended to provide

a shorthand guide to familiarize the inspector with the ISM Code. The job aid also provides a breakdown of the ISM Code's elements and the requirements for each element. In addition to being familiar with the ISM policy provided here, all Coast Guard marine inspectors and Port State Control Officers should read and become familiar with the 33 CFR Part 96, the ISM Code and NVIC 04-05.

---

1. When to Conduct ISM Code Oversight

The Coast Guard's ISM Code oversight occurs constantly, as a part of many routine activities. Examination of a vessel for any purpose is an opportunity to judge the effectiveness of its SMS. Although ISM oversight may not be the primary purpose of a visit, inspectors should always be alert to potential links between the deficiencies they find during other inspections and whether those items should have been managed by the SMS.
Oversight may also occasionally arise from investigations into vessel casualties, reports by vessel crewmembers, or at the direction of Commandant (CG-CVC).Direct Coast Guard oversight of ISM Code audits and ISM Code certification processes for U.S. companies' or vessels' SMS is coordinated through the authorized organization.

---

2. ISM Oversight of U.S. Vessels Enrolled in Alternate Compliance Program (ACP)

During routine ACP oversight examinations and inspections associated with the issuance or endorsement of the COI, in addition to inspecting the overall physical condition of the vessel, marine inspectors should verify the vessel has a valid SMC and DOC, and that as the crew is familiar with the vessel's SMS.If personnel from an authorized organization (ACP Surveyor) or marine inspector finds any significant material deficiency that might affect the validity of the vessel's SMC, they must notify the cognizant OCMI and the authorized organization that issued the vessel's SMC.

---

3. Reporting SMS deficiencies to the OCMI and SMC issuing authority

Significant material deficiencies, serious lack of vessel or equipment maintenance, or crew failure to follow safety procedures are key indicators the SMS may not be effectively implemented. Information to determine the effectiveness of an SMS may be collected through the following methods:

a. Observing or interviewing the crew members responsible for the SMS area in which the deficiency was noted. Crew members should be knowledgeable about the responsibilities the SMS requires of them.

b. Verifying that SMS procedures related to the area of deficiency are being carried out.

c. Verifying, with the master or responsible crewmember, what corrective action has been initiated under the SMS.

(1) Failures to submit corrective action reports should be reported to the cognizant OCMI.

(2) Depending upon the severity and frequency of such failures, a report should also be made with the vessel's SMC issuing organization.

(3) These reports should be made as soon as possible and no later than within 48 hours. They may be oral or written reports (which can include emails).

---

4. Coast Guard Actions for Non-Compliance with Safety Management System

a. If it appears that any portion of a vessel's SMS is not being followed, Coast Guard personnel may issue a Vessel/Facility Inspection Requirements, Form CG-835 to the vessel's master requesting the following:

(1) Verification of compliance from the authorized organization that issued the vessel's SMC; and

(2) If the non-conformity is linked to shoreside operations, verification of compliance from the authorized organization that issued the company's DOC.

b. In such a situation, it is the master's responsibility to notify the organization that issued the SMC or the DOC.

c. Depending on the severity of the deficiency, the OCMI may allow a reasonable period of time to satisfy the Vessel/Facility Inspection Requirements, Form CG-835. In cases where the deficient item would restrict the vessel from sailing, the time the OCMI allows to satisfy the Vessel/Facility Inspection Requirements, Form CG-835 should be proportionally short.

---

5. Observation of ISM Code Audits by Qualified Coast Guard Personnel

For the purpose of oversight, authorized organizations must allow the Coast Guard to assign qualified personnel to observe any aspect of the ISM Code audit or certification process. During such observations, the assigned Coast Guard personnel must respect the authority of the lead auditor and not hamper the progress of the audit. Coast Guard personnel must respect the proprietary nature of any personal or business information encountered during observation of ISM Code certification audits and abide by the provisions of the Privacy Act with respect to that information. All Coast Guard personnel assigned to observe ISM audits should have completed a ISM Code lead auditor training course. If any material deficiencies that affect a vessel's safety or operational capabilities are noted during the oversight observation, the authorized organization's lead auditor must provide a written or oral report to the Coast Guard for action. This report must be submitted no later than 48 hours after the audit is complete. The Coast Guard assigns observers to ISM Code review processes and external audits of SMS to oversee and review the auditors' actions and ensure the proper completion of processes. The lead auditor is responsible for all actions on the part of the authorized organization in representing the United States.

G. REVOCATION OF ISM CERTIFICATES FOR U.S. VESSELS

Authorized organizations acting on behalf of the United States may provide the Coast Guard with information, reports, or recommendations regarding revocation of ISM certificates, however the Coast Guard holds exclusive authority to revoke them. This includes Interim certificates as well.

---

1. Authority and Grounds for Revocation of DOC

a. Commandant (CG-CVC) has exclusive authority to revoke DOC certificates for U.S. vessels.

b. Revocation of a DOC certificate must be based on the following:

(1) The finding that a company or responsible person has failed to continuously review and address corrective action reports from the company's or vessel's safety management system operation.

(2) The finding that a company or responsible person has failed to correct or address major non-conformity(ies); or

(3) A recommendation from the authorizing organization acting on behalf of the United States for the revocation of the DOC certificate.

c. It is not possible to list each individual case which will require revocation of a DOC. Each situation will be different as responsible persons or companies' SMSs are customized to the needs of the specific operation of that company.

d. The revocation of a DOC certificate invalidates the SMCs for all vessels owned by the responsible person or operating under the company's SMS.

e. Such DOC certificate revocation actions will be documented, in writing, by Commandant (CG-CVC) to the responsible person or company. Copies will be sent to the authorized organization which issued the DOC certificate, all authorized organizations which issued SMCs under that DOC, and to cognizant OCMIs of certificated U.S. vessels owned by the responsible person or its managing company.

f. The cognizant OCMI(s) for these affected vessels will also be required to amend the vessel's COI(s) for domestic routes only, and accept return of any international convention certificates invalidated by restriction of the vessel's route.

---

2. Authority and Grounds for Revocation of SMC

A U.S. vessel's SMC may be revoked on the authority of the cognizant OCMI or District Commander. Commandant (CG-CVC) should be informed of the impending revocation before any action is taken. This is to ensure that other OCMIs who are involved with U.S. vessels owned by the same responsible person are notified of such actions. These OCMIs may wish to review the SMSs for other vessels under the same company to ensure that similar problems are not occurring with these other vessels.

The revocation of a SMC does not stop a U.S. vessel from operating in domestic trade. When an SMC is revoked, the cognizant OCMI will ensure that the vessel's COI is amended for domestic routes only and that other international convention certificates are invalidated or returned.

---

3. Revocation for Failure to Allow Access to Personnel or Records

Commandant (CG-CVC) must be notified immediately of any instance when a company or its vessel personnel restrict, deny or otherwise impede access by the Coast Guard or authorized organization personnel during a scheduled audit or SMS verification. When the obstruction by the company or its vessel personnel was deliberate, the company's DOC may be revoked immediately by Commandant (CG-CVC). If revoked, the company or vessel in question must reapply and undergo a complete recertification audit to regain its ISM Code certificates.

---

4. Appeal of Authorized Organizations Decisions Regarding ISM Code Certification

33 CFR 96.495 provides the actions available to appeal any decision by an authorized organization regarding the auditing and certification of a company or vessel SMS. The requirements of 46 CFR 1.03 may also be used to administratively process appeals to the Coast Guard.

CHAPTER 4: INTERNATIONAL CONVENTION ON LOAD LINES, 66/88

A. INTRODUCTION

This chapter is intended as an enhancement to the International Convention on Load Lines 66/88 as amended in 2003 (ICLL 66/88) and 46 CFR Subchapter E. These sources are the primary references for load lines.

B. LOAD LINE REQUIREMENTS FOR VESSELS TRANSITING BEYOND THE BOUNDARY LINE

In 1986 Pub.L. 99-509 dramatically revised the load line statutes in Title 46, United States Code, Chapter 51 (46 U.S.C. 51). Before this revision, the load line statutes were applicable to “merchant vessels” more than 150 gross tons that engaged in various voyages (i.e., foreign voyages, domestic voyages, coastwise voyages, inter-island voyages, etc). Due to new vessel types and operations not anticipated by the original statutes, it was appropriate to update the statute to bring some previously exempted vessels and operations under the seaworthiness regime of load lines.

The revision did away with “voyages” and relied on “movements” that cross the Boundary Line. This made virtually all U.S. vessels subject to load lines except those that are statutorily excluded by law or regulation. The previous exclusion for vessels on inland waters has been retained. However, the old loophole for vessels on “voyages to nowhere” is no longer applicable. As long as a vessel proceeds beyond the Boundary Line it is subject to load line requirements, even if it returns directly to the port of departure.

In general, a Boundary Line is a line following the trend of seaward, high water shorelines, separating inland waters from coastal and offshore waters. However, some special situations may apply to specific locations, so 46 CFR Part 7 must be consulted to determine the exact location of a Boundary Line. Although the regulations in Title 46 CFR 42.03-5(b)(v) have not yet been revised to reflect the 1986 changes to 46 USC 5102, the above policy guidance must be followed.

C. LOAD LINE CERTIFICATE EXTENSION AUTHORITY

Each international and domestic full term load line certificate is issued for 5 years. During that period, the vessel must undergo annual surveys by the assigning authority to verify that critical fittings and closing appliances are being maintained in working condition, and that the vessel has not been altered in any way that invalidates the freeboard calculations and assignment. The certificate is endorsed by the surveyor after each annual survey. By the end of the 5-year period, the vessel must undergo a renewal survey before the original certificate expires. Under certain circumstances the certificate may be extended in accordance with the provisions set forth below:

a. Under 46 CFR 42.07-45, Commandant (CG-CVC) may grant load line extensions for up to 150 days from the last day of the 5-year period.

b. Under 46 CFR 42.07-45, Commander, Ninth Coast Guard District may grant extensions of up to 365 days for Great Lakes load line certificates.

c. Per MSM Volume IV, Technical, COMDTINST M16000.9 (series), Chapter 6.F.4.b, approved assignment authorities may issue extensions up to 150 days based on a satisfactory survey and approval by Commandant.

d. Approved assignment authorities may grant extensions of up to, but not exceeding, 150 days for both international and Great Lakes load line certificates without receiving prior written approval from Commandant or the Commander, Ninth Coast Guard District, when the following are satisfactorily completed:

(1) An afloat survey of the vessel's condition that includes gaugings and internal examination, as necessary, to determine whether the vessel is fit to continue operating throughout the period of the certificate extension. This survey must confirm that there have been no alterations to the structure, equipment, arrangement, or scantlings which would affect the vessel in any way related to the certificate.

(2) Correction of any unsatisfactory items found during the afloat survey. These items must be corrected in accordance with 46 CFR 42.09-45 before the Provisional Load Line Certificate may be issued.

e. The cognizant Officer in Charge, Marine Inspection (OCMI) for the examination port must be notified before the survey begins. The OCMI may assign a Coast Guard marine inspector to attend the examination.

f. A load line certificate must not be extended if the certificate has already expired.

(1) Vessels with expired load line certificates must undergo an "initial load line survey" for issuance of a new certificate.

(2) Approved assigning authorities are to notify Commandant (CG-CVC) authority of any vessel that requests an extension after its load line certificate has expired.

NOTE: The above policy modifies policy previously set forth in the MSM Volume IV, Technical, COMDTINST M16000.9 (series), Ch. 6.F.4.b, and is included here, pending revision of MSM Volume IV, Technical, COMDTINST M16000.9 (series).

D. USE OF NON-EXCLUSIVE SURVEYORS TO ISSUE LOAD LINE CERTIFICATES

There has been increasing concern about the diminished availability of local American Bureau of Shipping (ABS) surveyors for conducting load line surveys, and the cost to vessel owners of bringing in surveyors from distant locations. To help ease this burden, the Coast Guard allows ABS to use certain non-exclusive surveyors to conduct load line surveys on behalf of the Coast Guard. Since ABS' institution of their Quality Management System (QMS), it ensures the qualifications and training of all ABS personnel. ABS may use non-exclusive surveyors for the purpose of conducting the requisite load line surveys if the non-exclusive surveyor's competencies are in full compliance with ABS QSS Procedure SWZ-002-99-P04. For the purpose of issuing load line certificates to U.S. flag vessels on behalf of the Coast Guard, the non-exclusive surveyor's competencies must be in full compliance with ABS QSS Procedure SWZ-002-05-P04. This must be recorded in the training certification record. The actual load line certificate is to be issued by the ABS Principal Surveyor. The non-exclusive surveyor may sign for the annual endorsement or provide a provisional or short-term conditional load line certificate.

NOTE: Under this policy, it is ABS' responsibility to establish and validate a potential non-exclusive surveyor.

Other authorized assigning authorities have Memorandum of Agreements (MOA) with the Coast Guard that address surveyor qualification and employment requirements. In general, surveyors performing Load Line surveys must be "exclusive employees" who are defined as permanently employed by the assigning authority. Requests to use a non-exclusive surveyor should be forwarded to COMDT (CG-CVC) for approval.

CHAPTER 1: HAZARDOUS MATERIALS SAFETY

A. INTRODUCTION

The Coast Guard's concerns for hazardous materials safety include those solids, liquids, and gases (liquefied or under pressure) that are dangerous to human life and property. For purposes of hazard classification, hazardous materials are divided into three main categories: bulk liquids and liquefied gases, packaged cargoes, and bulk solids.
The phrase "carried in bulk" refers to a commodity that is loaded or carried aboard a vessel without containers or labels and received and handled without mark or count.

B. DEFINITIONS

1. Hazardous Materials

The definition of hazardous materials depends on whether packaged or bulk cargoes are involved. In 49 CFR 171.8, a hazardous material is defined as “a substance or material that the Secretary of Transportation has determined is capable of posing an unreasonable risk to health, safety, and property when transported in commerce, and has designated as hazardous under section 5103 of Federal hazardous materials transportation law (49 U.S.C. 5103). The term includes hazardous substances, hazardous wastes, marine pollutants, elevated temperature materials, materials designated as hazardous in the Hazardous Materials Table (see 49 CFR 172.101), and materials that meet the defining criteria for hazard classes and divisions in Part 173 of Subchapter C of this Chapter.” This is a very broad definition. It includes many commodities that may not be allowed for shipment in bulk.

2. Bulk Materials

a. For the purpose of bulk transportation, 46 U.S.C. 2101(14) defines a hazardous material as “any liquid material or substance that is--

(1) Flammable or combustible;

(2) Designated a hazardous substance under Section 311(b) of the Federal Water Pollution Control Act (FWPCA), as amended (33 U.S.C. 1321); or

(3) Designated a hazardous material under section 5103(a) of title 49 [U.S.C.].”

b. See 46 CFR 153.40 for a listing of materials the Coast Guard has found to be hazardous when transported in bulk under this authority.

C. CONTROL OF PRODUCT SHIPMENT

1. Bulk Hazardous Liquids, Liquefied Gases, and Solids

The regulations for shipments of bulk and packaged hazardous substances differ in terms of how a product may be shipped. Before a material may be shipped in bulk, it must be evaluated by the Hazardous Materials Standards Division, Commandant (CG-ENG-5). The Hazardous Materials Standards Division, Commandant (CG-ENG-5), determines whether the material in question may be shipped in bulk and, if so, the conditions of shipment. A bulk hazardous material that is not listed as regulated may still be prohibited from bulk shipment.

2. Products Shipped as Packaged Cargoes

Products shipped as packaged cargoes are evaluated by the shipper, who should select the proper shipping name from 49 CFR, Part 172, Subpart B. The package rules state that a material that does not fit under any of the shipping names in 49 CFR Part 172, Subpart B, may be shipped under a "Not Otherwise Specified" (N.O.S.) category unless the regulations prohibit its shipment.

3. Evaluation of New Bulk Liquid Cargoes

Commandant (CG-ENG-5) evaluates new liquid cargoes proposed for bulk shipment under the Criteria for Hazard Evaluation of Bulk Chemicals. The criteria include flammability, toxicity, reactivity, and corrosiveness. The Criteria for Hazard Evaluation of Bulk Chemicals are contained in the International Maritime Organization (IMO) Code for the Construction and Equipment of Ships Carrying Dangerous Chemicals in Bulk, Resolution A.212 (latest edition). Cargoes that are only hazardous in regards to flammability are regulated under 46 CFR Subchapter D. Cargoes with hazards in addition to or other than flammability are regulated under 46 CFR Parts 150-154.

4. Department of Transportation (DOT) Review

Commandant (CG-ENG-5) evaluates solids carried in bulk (i.e., in cargo holds rather than in some type of container), ships' stores, cargoes under fumigation, bulk liquids, and liquefied gases). Hazardous Materials Standards Division, Commandant (CG-ENG-5), maintains the 46 CFR regulations concerning bulk liquids, liquefied gases, and bulk solids. The DOT Office of Hazardous Materials Transportation (OHMT) oversees the evaluation of packaged materials and their regulation under Title 49 CFR. Military explosives are regulated under 46 CFR Part 146.

5. Communications with Commandant (CG-OES)

As new products are added almost daily, any published list of authorized cargoes is quickly outdated. To resolve any doubt about a particular material, contact Commandant (CG-ENG-5). If the cargo is a liquid or liquefied gas to be shipped in bulk or a bulk solid under Title 46 CFR, call Commandant (CG-ENG-5) at 202-372-1401 If the material is to be shipped as a packaged cargo under Title 49 CFR, call Commandant (CG-ENG-5) at 202-372-1401. Division personnel may be reached from 0700-1530 Eastern time, Monday-Friday. Should a question arise during nonworking hours, a representative of Commandant (CG-ENG-5) can be contacted through Headquarters Flag Plot at (202) 267-2100.

6. IMO Review

Within the IMO--

a. The IMO Subcommittee on Bulk Chemicals (BCH) is responsible for the IMO Bulk Chemical Code and Gas Codes;

b. The Subcommittee on the Carriage of Dangerous Goods (CDG) is responsible for packaged cargoes and for the IMO International Maritime Dangerous Goods (IMDG) Code;

c. The Subcommittee on Containers and Cargoes (BC) deals with bulk solids.

NOTE: See Figure F1-1 for a summary of references concerning hazardous materials safety.

D. STATUTORY AUTHORITY

The Secretary of DOT (SECDOT) regulates the transportation of hazardous materials under two statutes: the HMTA (49 U.S.C. 1801-1812) and Title II of Title 46, U.S.C. These statutes apply to foreign and U.S. vessels in U.S. waters. Under the authority delegated by the SECDOT, the Coast Guard administers and enforces the laws and regulations for the safe maritime transportation of hazardous materials. Under the HMTA, the Director of the OHMT is authorized to issue regulations for package shipments of hazardous materials. The Coast Guard advises the OHMT on the development of these regulations and enforces them, but may not permit exemptions from them. The Ports and Waterways Safety Act (PWSA), as amended, makes the Coast Guard responsible for the safety of waterfront facilities that handle hazardous materials. See MSM Volume II, Material Inspection, COMDTINST M16000.7A (series), Chapter B8 for a general discussion of facility inspections.

FIGURE F1-1: SUMMARY OF INFORMATION CONCERNING THE HAZARDOUS MATERIALS SAFETY PROGRAM

	Bulk Liquids and Liquefied Gases	Packaged Cargoes, Including Portable Tanks	Bulk Solids	Fumigation	Ships' Stores
COGNIZANT SECTION G-MSO	Bulk Cargo	Packaged Cargo	Bulk Cargo	Bulk Cargo	Bulk Cargo
AGENCY WITH AUTHORITY	Coast Guard	Office of Hazardous Materials Transportation (OHMT)	Coast Guard	Coast Guard	Coast Guard
APPLICABLE LAWS	33 U.S.C. 1221 46 U.S.C. Chapter 37	49 U.S.C. 1801	33 U.S.C. 1221 49 U.S.C. 1801	49 U.S.C. 1801	46 U.S.C. 3306 46 U.S.C. 4105 46 U.S.C. 4302
APPLICABLE REGULATIONS	33 CFR Subchapter O 46 CFR Subchapters D & O	46 CFR Parts 64, 98, and 146 49 CFR Parts 171-179	46 CFR Part 148	46 CFR Part 147a	46 CFR Parts 147 and 194
CORRESPONDING INTERNATIONAL CODE OR CONVENTION	IMO Bulk Chemical Code (Res. A.212) Gas Carrier Code (Res. A.328) and Gas Carrier Code for Existing Ships	IMO International Maritime Dangerous Goods Code and U.N. Transport of Dangerous Goods	IMO Code of Safe Practice for Solid Bulk Cargoes	Maritime Safety Committee Circular 298 (MSC Circ. 298)	
MARINE SAFETY MANUAL VOL II	Chapter F1	Chapter F1	Chapter F1	Chapter F1	Chapter F1

E. REGULATIONS

1. General

The primary regulations governing the transportation of hazardous materials by vessels are:

Citation	Subject
46 CFR Part 146	Vessels transporting military explosives
46 CFR Part 147	Vessels carrying ships' stores which are hazardous materials
46 CFR Part 148	Vessels carrying bulk solid hazardous materials
46 CFR Part 150	Compatible stowage of bulk liquid hazardous materials and for vessels engaged in bulk hazardous waste incineration at sea
46 CFR Part 151	Unmanned barges carrying hazardous materials in bulk
46 CFR Part 153	Self-propelled ships carrying hazardous materials in bulk
46 CFR Part 154	Self-propelled ships carrying liquefied gases in bulk
49 CFR Parts 171-179	Packaged goods

2. Required Documentation

Under 46 CFR Parts 153 and 154, the Coast Guard recognizes a Certificate of Fitness (COF) issued in accordance with the IMO Bulk Chemical Code, the International Bulk Chemical Code, the IMO Gas Code for New Ships, and the International Gas Carrier Code, together with the International Convention for the Safety of Life at Sea (SOLAS) certificates, as equivalent to a Coast Guard issued Certificate of Inspection (COI), with some exceptions. Issuance of these documents permits issuance of a Letter of Compliance (LOC) with 46 CFR Subchapter O Endorsement to foreign vessels without the need for Coast Guard plan review. Situations involving packaged cargo are addressed similarly. To the extent permitted by 49 CFR 176.11, a packaged cargo shipped on a vessel in accordance with the recommendations of the IMO IMDG Code is acceptable.

NOTE: This does not mean that such vessels will meet all requirements of 46 CFR Parts 153-154.

F. INTERNATIONAL CODES

1. Introduction

a. The codes relative to the carriage of hazardous materials are:

(1) IMO Chemical Code. The Code for the Construction and Equipment of Ships Carrying Dangerous Chemicals in Bulk (the IMO Chemical Code), IMO Assembly Resolution A.212(VII), adopted 12 October 1971 and the IMO International Bulk Chemical Code, IMO Resolution MSC 4(48), adopted 17 June 1983, applies to all ships with a keel laying date before 1 July 1986. The International Bulk Chemical Code applies to all ships with a keel laying date on or after 1 July 1986. Both the IMO Bulk Chemical Code and International Bulk Chemical Code were revised and reissued to cover requirements stemming from Annex II of the International Convention for the Prevention of Pollution From Ships, 1973, as modified by the Protocol of 1978 (MARPOL 73/78). MARPOL Annex II entered into force on 6 April 1987. The revised IMO Bulk Chemical Code was adopted under Resolutions MEPC 20(22) and MSC 9(53). The revised International Bulk Chemical Code was adopted under Resolution MEPC 19(22).

(2) IMO Gas Code. The Code For The Construction And Equipment Of Ships Carrying Liquefied Gases In Bulk (the IMO Gas Code), IMO Assembly Resolution A.328(IX), was adopted 12 November 1975. The IMO Gas Code applies to new ships; defined in the Code ships with a keel laying date before 1 July 1986.

(3) IMO International Gas Carrier Code. The IMO International Gas Carrier Code, IMO Resolution MSC 5(48), was adopted 17 June 1983. The International Gas Carrier Code applies to all ships with a keel laying date on or after 1 July 1986.

(4) IMO Gas Code for Existing Ships. The Code for Existing Ships Carrying Liquefied Gases in Bulk (the IMO Gas Code for Existing Ships), applies to those gas ships not covered by the Gas Code for New Ships.

(5) IMDG Code. The IMDG Code addresses transportation of packaged hazardous materials.

(6) List of Bulk Materials Possessing Chemical Hazards. Appendix B of the Code of Safe Practice for Solid Bulk Cargoes, the List of Bulk Materials Possessing Chemical Hazards, addresses transportation of bulk hazardous solids.

b. Some of these codes are international recommendations and are not binding under international law. However, several codes dealing with hazardous materials have been incorporated into international law. These include the International Bulk Chemical Code and the International Gas Carrier Code, which are both made mandatory by reference in the 1983 amendments to SOLAS 74. With the implementation of Annex II of MARPOL 73/78 on 6 April 1987, the IMO Bulk Chemical Code and the International Bulk Chemical Code are mandatory under international law.

---

2. Application of Codes

There are sometimes differences between the requirements of U.S. regulations and international codes. For example, foreign vessels built to the standards of the IMO Chemical Code do not necessarily meet Coast Guard standards. It has been the Commandant's policy to adopt international codes such as the IMO Chemical Code as minimum standards and to establish higher standards only where essential safety concerns are involved. Because international codes are drafted by an international body, they may need to be vaguely worded to satisfy all member countries.

In contrast, U.S. Coast Guard regulations must be as precisely worded and detailed as possible. For example, The Chemical Code requires that filling pipes extend to "near the bottom of the tank." Corresponding U.S. regulations require that filling pipes must extend to within 4 inches or the fill pipe radius of the bottom of the tank. The intent is to provide specific guidance to ship designers as to what is an acceptable interpretation of "near the bottom of the tank." In this case, for a foreign vessel whose filling pipe terminates "near the bottom of the tank," its IMO COF would be accepted, although its condition may not strictly meet Coast Guard standards.

Sources for Copies of Codes	
IMO Secretariat, Publications Section 4 Albert Embankment London SE1 75R United Kingdom TELEX 23588	New York Nautical Instrument and Service Co. 140 West Broadway New York, NY 10013
Baker, Lyman & Company 308 Magazine Street New Orleans, LA 70130	Labelmaster 5724 N. Pulaski Road Chicago, IL 60646
UNZ & Company 170 Broadway New York, NY 10038	Southwest Instrument Co. 235 West 7th Street San Pedro, CA 90731

G. IMO CHEMICAL CODE

1. Introduction

The IMO Chemical Code, effective on 12 April 1972, is used for tankships carrying liquid chemicals in bulk. The IMO Chemical Code required extensive upgrading of existing vessels over a 6-year period. (The IMO has defined an existing ship as one whose keel was laid before 12 April 1972.) With the exception of damage stability and midship deckhouse arrangements, an existing vessel was required to meet the same standards as a new vessel as of 12 April 1978. See 46 CFR Part 153 for the Coast Guard's implementing regulations. Due to delays in publication, there is a contradiction between the IMO Code and the Coast Guard regulations. The Coast Guard regulations define an existing vessel as one for which was contracted for on or before 27 December 1977. Therefore, a vessel contracted for on or after 12 April 1972 and not later than 27 December 1977 may obtain a COI as an existing vessel under 46 CFR Part 153. However, the same vessel must be treated as a new vessel in order to receive an IMO COF.

- **Subdivision and Stability**

Damage stability standards and protective location of cargo tanks for existing tankships are addressed in subsection 1.7.3(a)-(f) of the IMO Chemical Code and in 46 CFR 153.7(c), as follows:

a. An existing single-hulled vessel that must have double-bottoms and side tanks installed in order to continue carrying Type II cargoes should be evaluated to ensure that its damage stability is not impaired by such modifications.

b. An existing double-hulled vessel carrying Type II cargoes is exempt from damage stability evaluation and has less stringent requirements for bottom and side tank location clearances. Such a vessel must have a double-bottom height of at least 760mm.

c. An existing Type III vessel that is being modified to carry Type II cargoes is required to meet the damage stability requirements of section 2.2.4 of the Code, but is not required to survive damage to the main machinery space. (A Type III vessel is a single-hulled vessel carrying cargoes requiring Type III containment.)

d. Existing Type I vessels are required to meet the damage stability requirements for new ships, but may be allowed minor relaxations of side and bottom tank separation distances. In effect, these standards exempt existing vessels from damage stability evaluations, unless cargo tank configurations are modified.

e. An existing Type III vessel is exempt from the Code's damage stability requirements.

3. Design Specifications

As previously noted, the Commandant has waived a plan review for chemical tankers that have valid COFs. However, this does not mean that foreign vessels have the option of obtaining a COF or undergoing plan review. A foreign chemical tanker must have a valid COF to obtain an LOC unless its home administration does not issue IMO certificates.

Except for unusual cases, chemical tankers holding LOCs have been designed and equipped in accordance with the IMO Code. Therefore, they should comply with the Code's operating requirements as well as 46 CFR Part 153. The IMO Code will be the primary reference for examination of foreign chemical tankers.

4. Hull Type Designations

The format and content of the IMO Chemical Code were based, to some extent, on the U.S. regulations for unmanned barges carrying bulk cargoes (46 CFR Part 151). The IMO Chemical Code’s designation of hull types, the table summarizing the minimum requirements, and the referencing of special requirements for individual cargoes will be familiar to users of the unmanned barge regulations. Like 46 CFR Part 151, the IMO Chemical Code identifies three hull types: Type I (very hazardous cargoes), Type II (moderately hazardous cargoes), and Type III (least hazardous cargoes). There is no

direct correlation between ship and barge hull types; a cargo that must be carried in a Type I barge won't necessarily be required to be carried in a Type I ship. The hull type designation provides the following information about a vessel:

a. Extent of hypothetical damage a vessel can sustain and remain afloat in a state of positive equilibrium. This is a standard used by naval architects to calculate a vessel's survivability. This is an important factor in plan review, but is of little concern to the inspector.

b. Cargo tank location within the hull. A Type II cargo must be carried in a tank located at a distance greater than the vessel's beam divided by 15, but not more than 6 meters above the baseline. In no case may the tank be closer than 760 mm to the vessel's side or bottom shell.

c. Maximum quantity of cargo that can be loaded in a tank. Type I cargoes are limited to 1,250 cubic meters per tank; Type II cargoes to 3,000 cubic meters per tank. Type III cargoes are not restricted.

NOTE: These are loading restrictions, not restrictions on tank sizes.

---

5. Table of Minimum Requirements

Chapter 6 of the Code contains a table that summarizes minimum and special requirements for certain products listed. The table uses several terms that require clarification:

a. Tank vents. Tank venting is described as either controlled by a pressure-vacuum valve or safety relief valve or open through a gooseneck vent.

b. Tank environmental control. This is not clear, as the word "yes" sometimes appears with no explanation of what is required. 46 CFR Part 153 should be consulted to determine appropriate requirements.

c. Electrical instruments. Special requirements, identified by "SP," are not contained in the Code.

d. Vapor detection. These are specified by "no detection," "flammable vapor detection," "toxic vapor detection," or the latter two. Detectors need not be permanently installed types, but may be reagent-tube-and-aspirator types.

NOTE: For some toxic substances, toxic vapor detection equipment is not currently available. The "universal interpretation" of Section 3.11 of the Code permits the substitution of additional air supplies, which are specified in Paragraph 3.16-6(b) of the Code, when toxic vapor detection equipment is not commercially available. The COF should indicate when this substitution has been allowed.

e. Fire protection requirements. The type of extinguishing medium that is most effective against fires involving particular cargoes (e.g., alcohol-resistant (polar solvent) foam, non-polar solvent foam, water spray, dry chemical, or nonspecific) is identified.

(1) The Chemical Code provides standards for fixed deck foam systems aboard vessels contracted after 20 May 1980. These standards include foam monitor configuration, rates of foam production, and foam coverage.

(2) Administrations may accept other configurations and foam production rates for vessels that carry a restricted number of cargoes. For vessels built prior to 20 May 1980, individual administrations must approve installations based on their own guidelines.

f. Special requirements. The last column of the table references special requirements for individual products.

6. Summary

The IMO Chemical Code leaves many areas open to interpretation. The corresponding requirements in 46 CFR Part 153 are therefore more detailed than the IMO Chemical Code. Other Administrations may have regulations regarding the same IMO Chemical Code requirements that differ from the U.S. regulations in terms of the details. Because of the small differences that may occur, it is necessary for an inspector to consider both the IMO Chemical Code and the relevant regulations when inspecting a foreign chemical tanker. The IMO Chemical Code should be cited as the primary reference, with the regulations providing U.S. interpretation of the Code's requirements.

U.S. regulations should not be used for a strict letter-for-letter inspection of a foreign vessel. NVIC 13-82 provides a convenient cross-reference between the IMO Chemical Code and 46 CFR Part 153.

H. IMO GAS CODE FOR NEW SHIPS (IMO GAS CODE)

1. Introduction

After adoption of the Bulk Chemical Code, the IMO began development of a code for liquefied gas ships. At the outset, it was agreed that this new code would apply only to new ships, to avoid problems of upgrading existing ships. Because of difficulties that became apparent with the vagueness of the Chemical Code, because the United States contributed more detailed requirements for gas ships, and because the requirements did not have to accommodate existing vessels, the Gas Code is much more detailed than the Chemical Code. Greater specificity was a primary goal of the United States in developing the Gas Code; however, some degree of vagueness remains. The requirements of 46 CFR Part 154 are intended to minimize the effects of this vagueness.

2. Comparison with the Chemical Code

The IMO Gas Code has certain similarities to the Chemical Code and 46 CFR Part 153. The IMO Gas Code discusses four ship types rather than three; one of these is a special category of Type II ship, called a Type IIPG. Ships classed under the IMO Gas Code are referred to with a “G” at the end of the ship type to distinguish them from chemical tankers. The IMO Gas Code’s damage stability requirements are similar to those for chemical tankers, except that a greater final angle of heel after damage is allowed for gas ships. Type IIPG ships have more relaxed damage stability standards than Type IIG ships. The tank location requirements for Type IG and Type IIG/IIPG vessels are the same as for Type I and II chemical tankers. Type IIIG gas ships are required to have tanks at least 760 mm inboard of the hull, while there is no separation requirement for Type III chemical tankers. Also, there is no cargo limitation requirement for Type IG and IIG/IIPG cargoes, as exists for chemical cargoes. Generally, comparison of the IMO Gas and Chemical Codes reveals the Gas Code has much more detailed requirements for tank and piping design, materials, venting, electrical equipment, fire protection, and instrumentation.

3. Minimum Requirements

a. Chapter XIX of the IMO Gas Code contains a Table of Minimum Requirements and references to special requirements for individual cargoes.

b. The IMO Gas Code specifies the ship type for each cargo; most require Type IIG/IIPG ships (in practice, there are no Type IIIG and few, if any, Type IG ships in use). Type IIPG ships, which are small vessels having pressure vessel tanks rated for at least 99.6 psig, may carry most cargoes that are permitted on a Type IIG ship. Cargoes with very low transport temperatures, such as methane and ethane, are exceptions.

c. Pressurized cargoes. Cargoes that must be carried in pressure vessel tanks, or must have inerted or dried atmospheres above the cargo, are identified in Columns D and E of the Table of Minimum Requirements.

d. Vapor detection. The vapor detection requirements are similar to those in the Chemical Code, except that flammable gas detectors and toxic vapor detectors for certain cargoes must be permanently installed, automatic monitors.

e. Gauging. Gauging under the IMO Gas Code is the same as under the Chemical Code, except that there is no provision for an open gauge.

f. Special requirements. The IMO Gas Code treats special requirements in a manner similar to the Chemical Code. The alkanes and alkenes (methane, propane, ethylene, etc.) have no special requirements because the Gas Code was drafted in anticipation of Liquefied Natural Gas (LNG) and Liquefied Petroleum Gas (LPG) ships. Thus, LNG and LPG are the "normal" cargoes, with special requirements in the Gas Code to accommodate cargoes with different properties.

g. Chlorine. The IMO Gas Code (the first amendment, specifically) contains detailed requirements for the carriage of chlorine. As chlorine may not be carried on self-propelled vessels in U.S. waters, it is not included in 46 CFR 154.

h. Anhydrous hydrogen fluoride. Anhydrous hydrogen fluoride may be added to the IMO Gas Code in the future. As anhydrous hydrogen fluoride may not be carried on self-propelled vessels in U.S. waters, it is not included in 46 CFR 154.

---

4. Additional Requirements

The detailed nature of the IMO Gas Code means that U.S. regulations correspond much more closely to it than to the Chemical Code. However, four issues that the United States considers to be important safety concerns went unresolved during the development of the IMO Gas Code. To address these issues, 46 CFR Part 154 exceeds the Code in the following areas:

a. Specification of higher allowable stress factors for Type B and C independent tanks.

b. Specification of lower design ambient temperatures for hull steel selection.

c. Requirement of enhanced grades of steel for crack-arresting purposes in the deck stringer, the sheer strake, and the bilge strake; and

d. Prohibition of cargo venting as a means of cargo temperature and pressure control.

5. Control of Venting

To carry any cargoes except methane, a vessel must have a refrigeration/re-liquefaction system or tanks designed to withstand the cargo's vapor pressure at 45°C. Any methane boil-off must be re-liquefied (to date, this has not proven economically feasible) or burned in the main propulsion system. Other means of disposal, such as incineration, are also permitted. Venting may be allowed under certain controlled operations such as gas trials. Emergencies may dictate control of cargo temperature and pressure by atmospheric venting.

6. Application

The IMO Gas Code applies only to new vessels.

I. IMO Gas Code for Existing Ships

1. Background

Several IMO delegations were concerned that existing ships might be barred from some ports if they did not have some type of IMO certificate. Therefore, the IMO developed the Code for Existing Ships Carrying Liquefied Gases in Bulk (the Gas Code for Existing Ships) for those vessels not covered by the IMO Gas Code. The Gas Code for Existing Ships is similar to the IMO Gas Code, although some requirements are significantly relaxed. For example, requirements for cargo tank design, materials of construction, and piping design and construction are much less stringent under the Gas Code for Existing Ships. The Gas Code for Existing Ships also requires no damage stability evaluation.

Basically, the Gas Code for Existing Ships embraces previous standards for gas ship construction without requiring major upgrading. It does not distinguish cargo and hull types, and subject vessels may carry the products listed in Chapter 19 of the Code. These products correspond to the Type II and III cargoes listed in Chapter 19 of the Gas Code for New Ships. Type I cargoes are intentionally excluded from the Gas Code for Existing Ships. Only ships designed and constructed to the IMO Gas Code may be considered for the carriage of such cargoes, including ethylene oxide, methyl bromide, and sulfur dioxide.

2. Requirements

The Gas Code for Existing Ships required some upgrading of existing ships, particularly for instrumentation and fire protection. These upgrades were required to have been completed by 31 October 1982. The note in the Gas Code for Existing Ships' preamble that specifies that the Code "is not meant to replace any controls which may already be in operation" is applicable to the U.S. LOC Program. Because the Code generally sets a lower standard for gas ships than the U.S. LOC Program does, the Coast Guard has not fully adopted it. When the Gas Code for Existing Ships requires upgrading to a standard that exceeds current the U.S. regulations, the Coast Guard will adopt those provisions in 46 CFR Part 154.

J. SHIPS NOT STRICTLY COVERED BY THE IMO GAS CODES

The Gas Code for Existing Ships was primarily aimed at ships already in service. Although the provisions of the IMO Gas Code and the Gas Code for Existing Ships theoretically apply to all gas ships, there is a third category of vessels: those under construction when the IMO Gas Code was adopted, but to which it does not apply. The IMO's intent, as stated in Resolution A.329(IX), is that ships under construction should meet the IMO Gas Code as fully as possible, according to their stage of construction. Such ships would, of course, have to meet the requirements of the Gas Code for Existing Ships as a minimum.

K. IMDG CODE

1. Introduction

The IMO developed the IMDG Code to aid administrations in applying the requirements of Chapter VII of the 1960 and 1974 SOLAS Conventions. The IMDG Code contains recommendations for classification, marking, labeling, packaging, placarding, stowage, and segregation of hazardous materials for maritime transportation. The IMDG Code’s information is similar to that found in the DOT Hazardous Materials Regulations (49 CFR Subchapter C).

2. Application

When packaged hazardous materials are shipped intermodally to the port area (i.e., by truck or rail to the vessel), the shipper may consult the Optional Hazardous Materials Table in 49 CFR 172.102. This table incorporates many of the IMDG Code's provisions. This is important to the shipper because it facilitates acceptance of the packages at the port of destination. Cargo must always be segregated and stowed in accordance with 49 CFR Subchapter C. IMO stowage and segregation requirements have been incorporated to the greatest extent possible in 49 CFR Table 172.102, Column 7(c), "Other Requirements." As indicated in 49 CFR 176.11, parts of the IMDG Code may be used in lieu of 49 CFR Subchapter C for domestic and international maritime shipment of packaged hazardous materials, except Class A and B explosives and radioactive materials.

3. Alternate Arrangements

Problems may be encountered in trying to comply with the stowage requirements of 49 CFR Subchapter C. Any such problems can be resolved by the Captain of the Port (COTP) through acceptance of alternate stowage procedures under 49 CFR 176.65.

4. Format of the Code

The IMDG Code is a five volume loose-leaf publication. The IMDG Code's introduction explains the Code's purpose and application; identifies nine classes of dangerous goods; and gives general requirements for testing, shipping documents, classification, marking, labeling, packaging, freight container transport, portable tanks, stowage, and segregation. In the remainder of the IMDG Code, each class of dangerous goods is listed separately. The introduction for each class gives specific requirements that are particular to that class. Each commodity or group of commodities is listed on a separate page, with a limited description of the product and its properties, its chemical formula where appropriate, the United Nations (UN) classification number, and synonyms. Annex I of the IMDG Code, found in Volume I, contains recommendations with respect to hazardous materials packaging. IMDG Code Annex I uses a performance-test approach rather than detailed packaging specifications like those used by DOT. IMO packaging falls into three groups, with Group I packaging subject to the most stringent performance tests and Group III the least. Practically speaking, all hazardous materials must be packaged as required by 49 CFR Subchapter C unless they are intended to remain within the port area.

5. Certificates of Competent Authority

Often, the entry on the IMDG Code page for packaging is "Receptacles approved by the competent authority of the country concerned." Other areas of the IMDG Code require specific approval by the competent authority. In these cases, the OHMT will issue the proper certificate. These are not "exemptions" since they are in accordance with U.S. law. Competent authority certificates issued by the OHMT are intended primarily for use in foreign ports. Such certificates issued by foreign governments are valid in the United States when the IMDG Code authorizes the use of a competent authority certificate, but only in the port area. Shippers desiring competent authority certificates should contact the OHMT at (202) 366-4511.

L. "Recommendations on the Safe Use of Pesticides in Ships"

Recommendations on the Safe Use of Pesticides in Ships, IMO Maritime Safety Committee Circular 298, provides useful information on the safe use of pesticides and rodenticides aboard ships. It is of interest because of the possible health and safety hazards of fumigation to persons aboard. Coast Guard regulations for fumigation are contained in 46 CFR Part 147A (Interim Regulations for Shipboard Fumigation).

M. INTERNATIONAL CONVENTION FOR THE PREVENTION OF POLLUTION FROM SHIPS, 1973, AS MODIFIED BY THE PROTOCOL OF 1978, RELATIVE THERETO (MARPOL 73/78).

1. Authority

MARPOL 73/78 is binding under international law and is implemented domestically in 33 U.S.C. 1901-1911.

2. MARPOL Annex II

Annex II of the MARPOL 73/78 Convention applies to noxious liquid substances carried aboard tankers. The criteria for designating noxious liquid substances are similar to the Environmental Protection Agency's criteria for identifying hazardous substances. MARPOL Annex II is mandatory; any country that ratifies the basic Convention must also accept Annex II (the United States is one such country). MARPOL 73/78 entered into force on 2 October 1983 and Annex II became effective on 6 April 1987.

MARPOL Annex II’s primary intent is to limit and control the discharge of hazardous substances into the sea during normal operations, such as tank cleanings, and accidental pollution resulting from groundings and collisions. The IMO has developed equipment and operational standards for ensuring compliance with Annex II. These standards have been implemented in Titles 33 and 46 CFR. The final rule promulgating these standards was published in the *Federal Register* on 12 March 1987.

3. Implementation of MARPOL Annex II

MARPOL Annex II requires reception facilities to be provided for certain tank cleaning wastes. See NVICs 4-87 and 5-87; MSM Volume II, Material Inspection, COMDTINST M16000.7A (series), Chapter E1, COMDTINST M16450.28, and Guidance & Procedures for Administering & Enforcing the Noxious Liquid Substnace (NLS) Waste Reception Facility Program, COMDTINST M16450.29 for guidance on implementing the regulations involving MARPOL Annex II.

4. MARPOL Annex III

Annex III of MARPOL 73/78 applies to harmful substances carried in packaged form. The United States has not yet ratified MARPOL Annex III.

CHAPTER 2: CARRIAGE OF COMBUSTIBLE AND FLAMMABLE CARGO

A. Introduction

Combustible and flammable liquids are classed as hazardous materials. Further classification of hazardous materials is divided into two main areas: bulk shipments and packaged cargo. The applicability of regulations to cargo is determined by the cargo's classification. This chapter provides guidance for the carriage of combustible and flammable cargoes in either packaged or bulk shipments. The remaining chapters of MSM Volume II, Material Inspection, COMDTINST M16000.7A (series), Section F, provide guidance for other hazardous materials shipments.

B. Integral, Portable, or Fixed Independent Tanks

These tanks may carry flammable or combustible products in bulk aboard cargo, miscellaneous, or passenger vessels in limited quantities, as permitted by the regulations found in 46 CFR 30.01-5, 70.05-30, 90.05-1, and 90.05-35.

C. Definitions and Interpretations

The determination of whether a cargo is a bulk or packaged shipment is of primary importance in identifying the proper authority and guidance for tank approvals, authorized products, and vessel operating requirements. Vessel inspection requirements are affected by the interpretations of principal purpose and limited quantities (these terms and their significance are explained in the following sections). The following criteria and definitions apply to the regulations for the use of portable and independent tanks.

1. Packaged or Bulk Cargo

Portable tanks, regardless of capacity, are deemed package cargo if the tank contents are not transferred aboard the vessel. (Tank approvals limit capacity.) The filling, discharge, or recirculation of cargo in a Marine Portable Tank (MPT) or independent tank on board a vessel is regarded as carriage in bulk.

2. Combustible or Flammable Determinations

If the cargo is carried as packaged cargo, use the definitions in 49 CFR 173.115.
46 CFR 30.10-15 and 30.10-22 apply to bulk shipments.

3. Cargo or Passenger Vessel Designation

Vessel type definitions for the carriage of packaged cargo are contained in 49 CFR 171.8. Offshore Supply Vessels (OSVs) are interpreted as cargo vessels for the purpose of packaged cargo regulations.

---

4. Cargo

Oil and other combustible or flammable liquids are considered cargo when transported to and offloaded at a destination. Fuel oil that a vessel carries in its own integral tanks, for its own use, is not subject to the requirements of 46 CFR 30.01-5. Exceptions to this definition include OSVs and some fishing vessels.

---

5. Deadweight Tonnage (DWT)

Deadweight Tonnage (DWT) is a measure of a vessel's carrying capacity. DWT is the difference in displacement between the vessel's deepest load waterline and its lightweight conditions. Deadweight capacity includes: crew and effects, passengers and luggage, provisions and stores, fresh water, fuel, ballast, and cargo. The lightweight condition is defined in 46 CFR 170.055. The vessel's deepest load waterline is the deepest draft permitted by the applicable regulations for the vessel.

---

6. Limited Quantity

Flammable and combustible cargo carried in bulk in an amount not to exceed 20 percent of the vessel's DWT is considered to be limited quantity. For Grade E drilling fluids (mud), the 20 percent volume may be computed using a specific gravity of 1.0.

---

7. Principal Purpose

When it is deemed that the principal purpose of a vessel is to carry combustible or flammable liquids in bulk, either in MPTs or independent tanks, the vessel must be certificated under Subchapter D. A vessel carrying less than 20 percent of its DWT generally is not deemed to be principally carrying bulk combustible or flammable cargo.

D. Portable Tanks

Portable tanks are approved containers designed to be loaded into, loaded on to, or temporarily attached to a vehicle or vessel. A portable tank is designed with approved handling arrangements, such as skids, lifting lugs, or intermodal container castings. Portable tanks may be handled or lifted full or empty and are treated as packaged containers. Transfer, fill, discharge, or recirculation of cargo to portable tanks other than MPTs while the tanks are on board a vessel is prohibited. Portable tanks for flammable and combustible liquids fall into four primary categories: Department of Transportation (DOT) specification tanks, special tanks, DOT-E (exemption) tanks, and MPTs.

---

1. DOT Specification Tanks

DOT specification tanks are DOT-51, DOT-57, IM-101, and IM-102 tanks regulated under 49 CFR Part 178.

---

2. Special Tanks

Special tanks are approved by Commandant (MSC) under 49 CFR 176.340. Special tanks are issued a Coast Guard letter of authorization for combustible liquids shipped as packaged cargo. One example of a special tank is a tank approved for combustible-oil based drilling mud, with an open-lid top that can be shut gas-tight.

---

3. DOT-E (Exemption) Tanks

Also called non-specification portable tanks, DOT-E (exemption) tanks may be used to transport regulated commodities when authorized by a Materials Transportation Bureau (MTB) exemption. These tanks are for packaged shipments only. See 49 CFR 107 for relevant exemption procedures. Although exemptions are issued by the MTB, the Coast Guard is consulted if the shipment involves marine transportation.

---

4. MPTs

Constructed and inspected in accordance with 46 CFR Part 64, MPTs are designed to be lifted while full of cargo (up to 55,000 pounds) and may be considered packaged. MPTs are also approved for bulk shipments and are designed for the transfer of cargo while on board the vessel. Pumping and piping equipment associated with filling or discharging an MPT must meet the applicable requirements of Subchapter F. Endorsement of the Certificate of Inspection (COI) is required for bulk shipments (See G.2 below).

Approval of portable tanks constructed and inspected under 46 CFR 98.35 expired on 1 October 1984. No extensions or waivers are authorized.

E. INDEPENDENT TANKS

Independent tanks are authorized on miscellaneous vessels and OSVs for the carriage of Grade B and lower petroleum products. Independent tanks are approved by the Marine Safety Center (MSC) and the cognizant Officer in Charge, Marine Inspection (OCMI) for Grades D and E. Requests for the carriage of cargo classed higher than Grade D must be forwarded through the cognizant OCMI and District Commander (m) to Commandant (CG-CVC) for approval. The only size limitation for vessels requesting to carry this kind of cargo is a 20 percent deadweight capacity limitation. Independent tanks must only be loaded or offloaded while empty, and are always considered bulk shipments. The following is a list of conditions for the approval of fixed independent tanks.

1. Design

The fixed independent tank's structure and design arrangements must be submitted to the MSC for approval. The tank may be designed as a gravity tank.

2. Stability and Loading

The vessel's owner or operator must submit stability and deck loading calculations to the MSC showing that the intact stability and structural arrangements of the vessel are adequate with the fixed independent tank on board. The calculations must cover all intended tank loading conditions for the route specified on the vessel's COI. The vessel's stability letter must be amended to indicate any limitations on the carriage of the fixed independent tank based on stability considerations.

3. Venting

The fixed independent tank must be fitted with a flame screen and pressure vacuum relief valve, or other suitable pressure relief device.

4. Inspection

The fixed independent tank must be gas-freed for internal inspection and hydrostatically tested at least every 4 years.

---

5. Securing Devices

The fixed independent tank must have adequate securing devices and be secured to the vessel both in accordance with conditions listed on the vessel's stability letter and to the satisfaction of the cognizant OCMI.

---

6. Nameplate

The fixed independent tank must have a durable nameplate permanently affixed to the tank structure in an accessible location listing--

a. Manufacturer's name, date of manufacture, and serial number;

b. Design pressure and test pressure in psig;

c. Volumetric capacity in gallons;

d. Maximum net weight and maximum gross weight in tons; and

e. Hydrostatic test date.

F. Authorized Products

1. Portable Tanks

Products that may be carried in portable tanks are specified in 49 CFR 173.119 and the IM tank table published by the MTB (for IM tanks only). Portable tanks approved under 49 CFR 176.340 may only be used for combustible liquids (flashpoint (FP) between 100 and 200° F) that have no other hazard.

2. MPTs

On cargo and passenger vessels, combustible liquids may be carried in MPTs. The carriage of flammable liquids (FP below 100° F) is limited by 49 CFR 173.119(a)(29) to cargo vessels engaged in offshore oil well drilling activities.

3. Independent Tanks

Vessels authorized under 46 CFR 30.01-05 and 90.05-35, may carry flammable and combustible liquids in bulk. Such vessels may also carry Grade B and lower in fixed independent tanks.

G. VESSEL OPERATING REQUIREMENTS WHEN CARRYING PORTABLE OR FIXED INDEPENDENT TANKS

1. Tonnage Measurement

Independent tanks are subject to inclusion in gross tonnage if they meet certain size criteria and cannot be considered as deck cargo (freight). Addition or removal of such tanks on a vessel which has already been assigned gross and net tonnages could require vessel re-measurement and assignment of new tonnages. Refer to Navigation and Vessel Inspection Circular (NVIC) 11-93 for details.

2. COI Endorsement

Except for portable tanks on small passenger vessels under 100 GT (Subchapter T vessels), vessels are not required to hold a COI in order to carry flammable or combustible liquids in packaged form. Vessels are required to have endorsements for all bulk combustible and flammable liquid cargo shipments. Such a vessel's COI should be endorsed for all independent tanks and MPTs equipped with fill or discharge piping, as follows:

a. For the carriage of fixed independent tanks, a vessel's COI endorsement must include a list of specific cargoes permitted to be carried and a statement that the tank must be lifted on or off the vessel only when completely empty.

b. For the carriage of bulk cargo in an MPT, a vessel's COI endorsement must include a list of specific cargoes authorized and an authorization to transfer to and from the MPT.

c. For the carriage of combustible cargo in integral tanks, a sample COI endorsement is "inspected for the carriage of Grade E combustible liquid drilling fluids in the following tanks: (specify each tank and capacity in gallons)."

d. For Subchapter T vessels carrying packaged hazardous materials in portable tanks, a sample COI endorsement is: "Approved for the carriage, on open deck, of portable tanks containing hazardous materials as authorized by 49 CFR 172.101. For flammable or combustible liquids, additional fire protection is to be provided in accordance with 49 CFR 176.315. Tanks may not be discharged or filled on board. Not more than 16 passengers may be carried when portable tanks are not certified gas free."

---

3. Firefighting

A vessel's firefighting capabilities must meet the requirements of 46 CFR 98.30-37 and 98.30-39 for bulk carriage and 49 CFR 176.315 for packaged shipments. No endorsement COI is necessary for the extra firefighting equipment.

---

4. Fixed Firefighting

46 CFR 95.05-10(g) requires a fixed firefighting system to be installed in all tanks carrying combustible cargo. This has been shown to be impractical for drilling mud and other cargoes which could clog a fixed system. Further relaxation of this regulation has been granted to OSVs. In view of the high FP of Grade E cargoes and the tank arrangements on OSVs, this requirement may be relaxed on OSVs carrying Grade E cargoes at ambient temperatures. This requirement should not be relaxed for vessels carrying Grade D cargoes or for Grade E cargoes at elevated temperatures. Fixed firefighting requirements do not apply to MPTs or fixed independent tanks.

---

5. Tank Fill/ Discharge

Cargo may not be transferred or recirculated from or to portable tanks, other than approved MPTs, while the tanks are on board a vessel. MPTs are specifically designed to be transported either empty or full. Fixed independent tanks must be loaded and offloaded while on the vessel and can only be moved when completely empty. Pumping and piping equipment associated with MPTs and fixed independent tanks must meet the applicable requirements of Subchapters F and J.

---

6. Stability

The carriage of portable or independent tanks must be in accordance with the vessel's stability letter or booklet, regardless of any endorsement required on the COI.

---

7. Stowage

Portable tanks are restricted by 49 CFR 176.76(g)(3) to "on deck" stowage when containing flammable liquids or combustible liquids with a FP less than 141° F that are insoluble in water. Other combustible liquids in portable tanks may be stowed on deck or underdeck on passenger and cargo vessels.

---

8. Tankerman

A tankerman is not required when transferring to or from an OSV’s fuel tank. A tankerman is required for transfer to, from or between MPTs, independent tanks, or integral cargo tanks.

H. Vessel Type Requirements

1. OSVs

Special consideration was provided for OSVs in P.L. 96-378, now 46 U.S.C. 3710(a). However, the considerations of principal purpose and limiting quantities still apply to OSVs. An OSV may not carry more than 20 percent of its deadweight in bulk liquid cargo. Regardless of the subchapter under which they are certificated, OSVs are considered cargo vessels for the purposes of 49 CFR and may carry combustible or flammable liquids in approved portable tanks. Bulk combustible or flammable cargo is authorized under 46 CFR 90.05-35. The COI must be endorsed for cargo carried in bulk.

2. Small Passenger (Subchapter T) Vessels/ Crew Boats

For the purposes of 49 CFR Subchapter C, T-boats on domestic voyages are considered cargo vessels when carrying 16 or less passengers and passenger vessels when carrying more than 16 passengers (see 49 CFR 171.8 for the definitions of cargo vessel and passenger vessel). A vessel may carry hazardous materials in approved portable tanks only when operating as a cargo vessel and specifically authorized by COI endorsement. Transfer of cargo to or from a portable tank or other packaging on board the vessel (with or without passengers aboard) is not authorized.

3. Subchapter I Barges

Cargo barges certificated under Subchapter I may not carry combustible or flammable liquids in any quantity in bulk. They may carry MPTs if the tank is not equipped to transfer cargo.

I. Special Products

1. Drilling Fluids

The composition of drilling fluids such as mud may vary depending upon use and source.

Drilling mud with a FP greater than 200° F is not regulated as a hazardous material under 49 U.S.C. 1801-1812 (49 CFR 100-177). Because drilling fluids are considered a product and service unique to the offshore oil industry, the limited quantity is defined as 20 percent of the DWT at a specific gravity of 1.0, for OSVs carrying Grade E drilling fluids. (For more information on this topic see MSM Volume II, Material Inspection,

COMDTINST M16000.7A (series), Chapter A1) for requirements when carrying Grade D and above cargoes.)

a. Mud characteristics. There are two general categories of mud: water based and oil based.

1. Water-based mud that does not contain any oil is not subject to the requirements of combustible liquids. Industry may designate mud as water based even though it contains oil, however, the mud would then be subject to the requirements of this chapter. Oil in any amount will subject the mud to the requirements of this chapter.

2. Generally, mud containing oil is considered a Grade E combustible liquid. However, it may be classed even higher (such as for "spent" or recycled mud). It is the shipper's responsibility to know the characteristics of the mud.

b. Carriage. Oil based mud must be carried in integral, portable, independent, or other approved tanks under the same considerations as other bulk combustible cargo. Oil based mud must not be carried in open hopper type tanks or in any other non-approved independent tanks.

c. Quantity. Because of the densities of mud, special considerations should be given for stability of the vessel and sizing of independent tanks. The 20 percent deadweight limit is computed using a specific gravity of 1.0. Special consideration may be given by Commandant (CG-CVC) for existing vessels to carry greater amounts.

---

2. Oil Field Wastes

Wastes, solids, cuttings, etc., that contain oil in any quantity are considered hazardous materials under the FWPCA. Materials that have been contaminated by oil, even if washed, processed, or otherwise diluted to a low combustibility hazard, are regulated as Grade E products if capable of leaving a sheen. Therefore, transportation in non-approved tanks or uninspected barges (such as open hopper) is not authorized.

---

3. Lube Oil

Lube oil and other Grade E products with an FP greater than 200° F are not regulated under 49 CFR when carried in packaged form.

---

4. Methanol

Methanol (Methyl Alcohol) is a Grade C flammable liquid that is used by the offshore oil industry. The carriage of methanol in either integral or fixed independent tanks on OSVs is authorized, provided the following conditions are met:

a. Paragraph 11.H of this Chapter, Applicable Tank Vessel Requirements, applies.

b. Paragraph 11.1 of this Chapter, Vessel Operating Requirements, applies.

c. A B-V semi-portable fire extinguisher must be provided on the open deck and be capable of reaching the methanol cargo tanks, tank vents, and transfer connections.

d. A fixed extinguishing system that meets the requirements of 46 CFR 34.05-5 must be provided to protect methanol pump rooms.

e. Portable fire extinguishers must be provided as denoted for cargo areas in 46 CFR Table 34.50-10(a). If used, the foam extinguishing agent for semi-portable and portable fire extinguishers protecting methanol areas must be of the polar solvent (alcohol resistant) type.

f. Methanol tanks may not be located vertically below the vessel's accommodations, service spaces, or navigating stations.

CHAPTER 3: CARRIAGE OF BULK LIQUID CHEMICALS

A. CRITERIA FOR REGULATION

The liquid chemicals regulated as hazardous materials under 46 CFR Subchapter O (Certain Bulk Dangerous Cargoes) all have one or more of the following properties:

a. Unusual flammability (e.g., wider flammable limits, lower auto-ignition temperature), compared to normal petroleum products.

b. Toxicity (chronic or acute).

c. Corrosivity.

d. Self-reactivity (polymerization).

e. Instability or unusual reactivity.

f. Pyrophoricity (auto-ignition).

g. The potential to cause marine pollution (damage to marine resources, bio-accumulation, tainting of seafood, reduction of amenities).

B. PRODUCT EVALUATION

1. Initial Review

Before a new liquid product may be shipped in bulk, the shipper or manufacturer must submit a completed Characteristics of Liquid Chemicals Proposed for Bulk Water Movement, Form CG-4355, or the International Maritime Organization (IMO) equivalent, Circular Letter No. 944, "Characteristics of Liquid Chemicals Proposed for Marine Transport in Bulk," to the Hazardous Materials Standards Division, Commandant (CG-ENG). The Hazardous Materials Standards Division, Commandant (CG-ENG), will then evaluate the data on this form and other information in available literature about the product. Based on the properties of the product, Commandant (CG-ENG) will make a decision to place it in one of the following four categories:

a. Flammable or combustible liquid regulated under 46 CFR Subchapter D.

b. Hazardous or polluting materials regulated under 46 CFR Subchapter O.

c. Too dangerous to be shipped in bulk.

d. Unregulated.

2. Authorization for Shipment

Until a product has been evaluated and authorized for shipment, it is prohibited from bulk carriage. If the product is within the purview of Subchapter O, tentative minimum requirements for its safe carriage are developed. Commandant (CG-ENG) will advise the shipper, all District Commanders (p), and the Marine Safety Center, Commandant (CG-MSC) of these requirements by letter or telex. This facilitates movement of the product prior to adoption of the minimum requirements as a final rule. Eventually, the product will be included in 46 CFR Table 151.05; 46 CFR 153, Table I; or 46 CFR 154, Table 4. If a product that is offered for shipment is not included within one of these categories and the shipper cannot produce written authorization for shipment, Commandant (CG-ENG) can be contacted by telephone (commercial (202) 372-1401).

3. Regulatory Control

If the product has no significant hazards other than flammability or combustibility, it is regulated under 46 CFR Subchapter D. If the product possesses one or more of the properties listed in A of this chapter, it is regulated under Subchapter O.

NOTE: The definitions of flammable and combustible in Subchapter D differ from those in 49 CFR Subchapter C.

A list of products regulated by neither Subchapter D nor Subchapter O is given in Appendix I to 46 CFR Part 153. Cargoes that have been reviewed but are presently not permitted in bulk in U.S. waters are--

a. Acrolein;
b. Chlorine (on self-propelled vessels);
c. Ethylenimine;
d. Hydrofluoric acid;
e. Hydrogen;
f. Hydrogen chloride;
g. Hydrogen fluoride;
h. Methylcyclopentadienyl manganese tricarbonyl;
i. Nitric acid (greater than 70 percent concentration);
j. Nitrogen tetroxide;
k. Oxygen;
l. Phosphorus trichloride; and
m. beta-Propiolactone.

C. PRODUCT CLASSIFICATION

1. General Requirements

Generally, products should be shipped under one of the names in the four categories given in B.1 above, rather than under trade names. The only exceptions would be a mixture consisting solely of products listed in Subchapter D or unregulated products. Some characteristics that are of interest when classifying a particular product and developing minimum requirements for its carriage in bulk are as follows:

a. Flashpoint.

b. Vapor pressure.

c. Flammable limits.

d. Auto-ignition temperature.

e. Temperature of carriage.

f. Boiling and freezing points.

g. Toxicity of liquid and vapor.

h. Reactivity with itself, air, water, or materials of construction.

i. Corrosivity to human skin and materials of construction.

j. Marine pollution potential.

These and other chemical and physical properties are evaluated to determine requirements for safe carriage, such as for hull type, temperature and pressure of carriage, vent height, gauging and venting types, firefighting media, materials of construction restrictions, and electrical class and group. The overriding principle used in developing these requirements is containment of the product, commensurate with its hazards.

2. Sample Evaluations

Caustic soda (sodium hydroxide).

Caustic soda is highly corrosive to human skin. It is also nonflammable and nontoxic, has virtually no vapor pressure, and is not corrosive to mild steel. Caustic soda has minimum requirements for carriage in a single-hull vessel, with open gauging and venting, no

specified vent height, no special firefighting media, and no special electrical equipment requirements. Aluminum is not allowed in construction due to its corrosion by caustic soda and the associated generation of hydrogen.

Allyl chloride.

Allyl chloride is highly flammable and toxic, becomes more corrosive when wet, and has a relatively high vapor pressure. Accordingly, the requirements for its carriage specify separation from the vessel's hull, closed gauging and controlled venting (pressure-vacuum valves), a high vent, and special firefighting media and electrical equipment. The pressure-vacuum valve is required to be set at or above 21 kilopascal (kPa) gauge (3 psig) to minimize the venting of cargo due to tank breathing.

3. Awareness

Data on the properties of these products is important to merchant mariners and to marine inspectors. For their own safety, marine inspectors must be aware of the properties of cargoes they handle while they are aboard a vessel. Also, particular cargo properties may influence the Officer in Charge, Marine Inspection (OCMI) requirements for correction of deficiencies found during routine inspections.

4. Sources of Information

A marine inspector can usually find all necessary information on product properties in the latest editions of the Chemical Data Guide for Bulk Shipment by Water, COMDTINST M16616.6, and the Chemical Hazards Response Information System (CHRIS) Manuals, COMDTINST M16465.11 and M16465.12. For more information on product properties or advice on certain requirements, Commandant (CG-ENG) may be contacted at (202) 267-0103.

D. POLYMERIZATION

1. Introduction

Certain chemical products, called monomers, are required to be inhibited to prevent polymerization during transportation. A polymerization reaction is generally exothermic (characterized by the release of heat) and usually leads to the formation of a solid. Depending on the rate of reaction, polymerization may occur violently, causing severe structural damage by over-pressurization, or very slowly, resulting only in blocked transfer lines. Unfortunately, it is not possible to know precisely which monomers will

behave violently in specific instances. Accordingly, the possibility of cargo polymerization must always be viewed as a serious matter.

2. Use of Inhibitors

Inhibitors are chemicals added to the monomer to help prevent its self-reaction. The regulations identify which cargoes need inhibitors, although they do not specify types or amounts. They also require the shipper to furnish a cargo certificate identifying the inhibitor used, the amount, the duration of its effectiveness, any temperature limitations, and actions to be taken if the length of the voyage exceeds the duration of the inhibitor (see 46 CFR 153.912 and 154.1818).

E. CHEMICAL TANKSHIPS

1. Introduction

The modern chemical tankship is a small, sophisticated vessel, usually of 20-30,000 Deadweight Tons (DWT) and having up to 42 tanks.

These tanks are often constructed of, or coated or lined with, stainless steel. Such protective measures enable the carriage of cargoes that normally attack mild steel and ensure product purity.

Piping and pumping systems are more highly segregated on chemical tankships than on conventional tankships, and deep well or submerged pumps are used in lieu of the traditional pumproom. The tanks are generally smaller, since most chemical cargoes are shipped in relatively small parcels. The terms "parcel tankers" and "drugstore ships" are sometimes used to refer to this class of ships.

2. Chemical Tankship Operations

The nature of the chemical trade is such that chemical tankship operations differ somewhat from those of conventional petroleum product tank vessels. Because of the small size of most cargoes, the parcel tanker usually visits many ports, sometimes moving among several berths in each port on a voyage. Others, however, are dedicated to a particular cargo carried on a regular route. As a result, some parcel tankers are approved for only one or two products, although most may carry many products. In general, chemical tankships carry chemicals that are flammable and similar to petroleum products in some respects. Chemical tankships often carry clean products. Consequently, U.S. chemical tankships are certificated under 46 CFR Subchapter D and endorsed to carry products under 46 CFR Subchapter O. The requirements in 46 CFR Subchapter O

supplement, rather than supersede, the requirements of 46 CFR Subchapter D, unless otherwise stated.

3. Applicable Regulations

The regulations for chemical tankships are contained in 46 CFR Part 153 (Safety Rules for Self-Propelled Vessels Carrying Hazardous Liquids). In accordance with the IMO Bulk Chemical Code, the provisions in 46 CFR Part 153 became fully effective for existing tankers on 12 April 1978. Existing tankers must comply with all provisions of the regulations except for the following:

Subject	CFR Citation
Damage stability	46 CFR 172.130 and 172.133
Door location	46 CFR 153.202
Tank location	46 CFR 153.230 and 153.231
Accommodation space location	46 CFR 153.234

4. Miscellaneous Considerations

The damage stability requirements for existing chemical tankers are described in subpart F.4 of this chapter. Tank location requirements are relaxed for existing tankers, except that the distance between a Type II containment system and the vessel's bottom may not be less than 760mm (30 inches). These considerations are handled by the MSC and Commandant (CG-ENG). However, marine inspectors will be concerned with the relaxed provisions for accommodation spaces and door locations. Currently, the regulations do not prescribe specific standards for accommodation spaces in midship deckhouses on existing parcel tankers. It has been found impractical to demand compliance with the door location requirements of 46 CFR 153.202 aboard existing ships. The Coast Guard and other IMO administrations have agreed to guidelines for the treatment of midship houses and door locations on existing ships. These are provided in Subpart F.3 of this Chapter.

F. SAFETY RULES FOR SELF-PROPELLED VESSELS CARRYING HAZARDOUS LIQUIDS (46 CFR PART 153)

1. Introduction

As with any regulations, several areas of 46 CFR Part 153 have been modified, interpreted, and clarified as problems in their application were encountered. The following guidance was developed to ensure uniformity in the interpretation and application of 46 CFR Part 153. Technical problems in the application of these regulations should be brought to the attention of Commandant (CG-ENG) at (202) 267-0103.

2. Applicability

Inquiries have been made concerning the application of 46 CFR Part 153 to a parcel tanker carrying cargoes regulated under 46 CFR Part 153 only in a limited area of the cargo containment/tank section of the vessel. Many people have erroneously supposed that 46 CFR Part 153 would not apply to areas of the cargo containment/tank section if subject cargoes were not carried in these areas. An extension of this logic would lead to the treatment of individual tanks and piping systems as separate zones, subject to either 46 CFR Part 153 or Subchapter D. This approach, however, is not what the Commandant intended. It is true that some situations may warrant special considerations and also that cargoes regulated under 46 CFR Part 153 may be carried in only some of a vessel's the cargo tanks. However, 46 CFR Part 153 standards for fire protection, ballast piping and equipment, electrical equipment, personnel safety, and operational requirements must be applied to the entire cargo containment section of the vessel.

3. Standards for Midship and After Deckhouses Aboard Existing Vessels (46 CFR 153.7(c)(3)-(5))

46 CFR 153.7(c)(3), (4), and (5) make allowances for existing vessels that do not meet 46 CFR 153.234 requirements (such as vessels with midship deckhouses). Such vessels often cannot comply with 46 CFR 153.200 and 153.202 (General Vessel Arrangements) requirements. The IMO Chemical Code also makes allowances for existing vessels with midship deckhouses. As a result, existing chemical tankers with an accommodation space in a midship deckhouse within the boundaries of the cargo area may continue to operate with this arrangement. When a toxic cargo (those for which 46 CFR 153.526 is given as a special requirement in Table I of 46 CFR Part 153) or flammable cargo is carried in the cargo tanks below the midship house, the following standards must be applied:

a. Cargo tank and accommodation space boundaries. Accommodations are not allowed in the space bounded by the tops of the cargo tanks and the first deck of the midship deckhouse (referred to as the bridge space).

b. No through deck penetrations. Cargo tank tops forming a boundary of the bridge space must be free of any through deck penetrations such as cargo tank hatches, Butterworth openings, deep well pumps, ullage openings, and sounding tubes.

c. Deck penetrations. Electrical cables, pipe runs, and other penetrations in the first deck of the midship deckhouse, immediately above the cargo tank tops, are allowed if they are made gastight. Doors, hatches, and other access openings in this deck of the midship house are not permitted.

d. Ventilation systems. When the bridge space is bounded by a bulkhead at either side at the fore or aft end, the ventilation system must meet the requirements of 46 CFR 153.312 and 110.15-1(b)(16). The increased ventilation rate prescribed in 46 CFR 153.316 does not apply to the bridge space, regardless of the cargo carried.

e. Electrical installations. Electrical installations within the bridge space must meet the requirements of 46 CFR Subchapter J.

f. Non-welded fixed cargo piping joints. Except for approved connections to shut-off valves and expansion joints, runs of fixed cargo piping with non-welded joints are not permitted in the bridge space.

g. Equivalencies. For existing vessels that are unable to meet the requirements of 46 CFR 153.200 and 153.202, the following measures are considered to provide an equivalent standard of safety and are acceptable in accordance with 46 CFR 153.10. These following measures apply to the carriage of any cargo listed in Table I of 46 CFR 153 in any tank on the vessel:

(1) Portlights located on the forward bulkhead of the aft deckhouse accommodation and on the midship house bulkheads facing the cargo area, except for wheelhouse windows, must be fixed (i.e., incapable of being opened) and gastight.

(2) Wheelhouse windows must meet the requirements of 46 CFR 153.200.

(3) Doors in the forward bulkhead of the aft deckhouse accommodation with access to cargo tank deck must be permanently sealed.

(a) Where existing arrangements preclude this, a suitable airlock arrangement at the door location must be provided. This installation must include a gastight, self-closing metal outer door and a substantially gastight, self-closing, inner door. This inner door must be at least a metal joiner door.

(b) The airlock space between the doors must be mechanically ventilated from a nonhazardous location and maintained at overpressure to the space outside the airlock.

(c) An audible and visual alarm system must be provided to give warning on both sides of the airlock if both doors are open simultaneously.

(4) Portlights on the side of the after deckhouse must also be fixed and gastight if they are located--

(a) On the first deck (tier) above the cargo deck; and

(b) Within 10 feet of the forward bulkhead, or within that distance aft of the forward bulkhead to the first side door, whichever is less.

(5) Doors located more than 2.4 meters above the cargo tank deck and facing the cargo tank area must be substantially gastight and self-closing. This provision applies to doors on the aft deckhouse accommodation, as well as the midship house (the Commandant has determined that solid metal or wooden joiner doors, except those having screens or louvers, will fulfill this requirement).

(6) Because accommodations are not allowed in the bridge space, doors accessing the cargo tank deck from the bridge space are exempt from these requirements.

h. Some existing chemical tankers have been constructed so that the after accommodation spaces partially extend over a cargo pumproom (this forms the after end of the cargo tank area). If this pumproom services tanks that carry cargoes regulated under 46 CFR Part 153, the pumproom must meet the ventilation requirements of 46 CFR 153.312 and 153.316. The pumproom ventilation system must be in operation at the following times:

(1) During all phases of cargo handling and transfer.

(2) During tank cleaning and gas-freeing.

(3) Whenever work involving equipment within the pumproom is undertaken.

4. Damage Stability Requirements for Existing Vessels

a. General. 46 CFR 153.7(c)(3) and (5) permit the endorsement of an existing vessel's cargo containment system as Type II or Type III if the vessel has a load line certificate and meets any additional requirements listed. Existing vessels are not required to meet the damage stability requirements of the IMO Chemical Code. Since 46 CFR Part 153 was developed from the Chemical Code, 46 CFR 153.7(c)(3) and (5) provide a similar waiver for existing vessels. Accordingly, such vessels need not meet the damage stability standards of 46 CFR 172.130, 172.133, and 153.231(b).

b. Endorsements for Type II containment. 46 CFR 153.7(c)(3) imposes tank shell separation requirements for the endorsement of Type II systems. A valid load line certificate does not guarantee that an existing vessel meets any particular damage stability standard, or that damage stability calculations were ever made. Consequently, the requirement for the load line certificate under 46 CFR 153.7(c)(3) and (5) should be considered in this context.

c. Requirements for conversions. 46 CFR 153.7(c)(4) stipulates that existing vessels undergoing conversions to upgrade to a Type II containment system by addition of double bottoms or wing tanks must meet the damage standards of 46 CFR 153.135 and 153.150 in all areas of the vessel, except the machinery spaces. Damage stability calculations are required for modifications of this nature and other structural modifications.

---

5. IMO Certificates

A vessel that meets the definition of an existing vessel under 46 CFR 153.7(a)(2) and whose keel was laid after 12 April 1972 is considered a new vessel under the IMO Chemical Code. If the owner of such a vessel applies for an IMO Chemical Code Certificate of Fitness (COF), the vessel is required to meet the requirements of 46 CFR Part 153 and the recommendations of the IMO Chemical Code as applicable to new ships. (See 46 CFR 153.12.)

---

6. Hull Type Calculations and General Vessel Arrangements

For existing vessels, see F.4 of this Chapter regarding damage stability standards and F.3 of this Chapter concerning standards for midship and aft deckhouses. (See 46 CFR 153.19, 172.130-150 and 46 CFR 153.200-202.)

---

7. Personnel Emergency and Safety Equipment

a. 46 CFR 153.214(a). Under section 3.16.9 of the IMO Chemical Code, only one stretcher is required (see F.29 of this Chapter).

b. 46 CFR 153.214(c). 46 CFR Part153 contains no standards for evaluating first aid kits; any first aid equipment is sufficient to meet this requirement.

---

8. Access to Void Spaces

Regulations regarding access to void spaces and cargo tank access are located in 46 CFR 153.217 and 46 CFR 153.254, respectively. A summary of the requirements follows.

a. General. In several cases, different criteria apparently have been applied to distinguish an access opening and an access trunk to a cargo tank or void space.

(1) Access openings to void spaces and cargo tanks with 24-inch high coamings are not considered to be access trunks under 46 CFR 153.254(d). Access trunks are larger to account for internal projections, such as side-mounted ladders, that decrease the effective cross-sectional area of the opening.

(2) Whether or not an access opening to a cargo tank or void space is considered an access trunk depends upon the placement of mounted ladders and the resultant cross-sectional area.

b. Access requirements. Horizontal access openings (e.g., hatches and manholes) must be of sufficient size to allow a person wearing a breathing apparatus to ascend or descend any ladder without obstruction.

(1) Minor relaxations of these standards will be permitted for existing vessels if the existing horizontal access openings allow a person wearing a breathing apparatus to enter or leave a space freely.

(2) Enlarging an access opening to the dimensions required under 46 CFR 153.254 might impair the structural integrity of the tank or space. The intent of this section will be met if such an access opening is enlarged as much as is possible without impairing the structural integrity of the space.

---

9. Type II Containment Systems

See Subpart F.4 of this Chapter for more information concerning the damage stability requirements for existing vessels, or 46 CFR 153.231(b) for the relevant regulations.

---

10. Fore and Aft Location

See Subpart F.3 of this Chapter for more information or 46 CFR 153.234 for the relevant regulations.

---

11. Piping System Design (46 CFR 153.280)

Specifications and acceptable materials for piping systems are given in 46 CFR 56.60. Under 46 CFR 56.10-5(d), plastic pipe and Fiber Glass-Reinforced Plastic (FRP) pipe, such as "Bonstrand," must not be used in transfer systems for flammable or combustible cargoes. The Commandant has recognized the need for parcel tankers to load relatively small quantities of hazardous cargoes without using the usual manifold or pumproom arrangements. The Commandant considers direct loading with portable piping and hoses to be a suitable alternative. When loading larger quantities (i.e., when one cargo is loaded into more than two tanks), fixed piping is required. Direct loading through a fixed drop line or deep well pump stack from a portable piping system must comply with the following requirements:

a. All connections between hoses, pipes, fixed drop lines, and deep well pumps must be made in accordance with 33 CFR 156.130. Any connection between hose or pipe sections that have a reduced portable containment below must have a tightened bolt in each hole of the flange to secure the connections.

b. After disconnection, pipes and hoses must be drained and cleaned before removal from the containment area.

c. Not more than one "Y" piece may be used for each cargo loaded (i.e., not more than two tanks may be loaded with any one cargo using this method).

d. Hoses must meet the requirements of 33 CFR 154.500 or 46 CFR 153.940, according to the cargo being transferred. A portable hose line must not consist of more than four sections or exceed 100 feet in length.

e. Portable pipes must be constructed of materials in accordance with the requirements of 46 CFR Part 56.

f. When loading or discharging a cargo that is required by 46 CFR Part 153 to have closed or restricted gauging, the fixed drop line or deep well pump connection must have a stop valve. After transfer, the valve should be left in place, closed, and blanked.

---

12. Cargo Filling Lines

The cargo tank filling lines on existing vessels that terminate near the bottom of the tank will meet the intent of this provision, and do not warrant modification. See 46 CFR 153.282 for the relevant regulation.

---

13. Emergency Shutdown Stations

46 CFR 153.296(a) requires two emergency shutdown stations. Section 2.11.1 of the Chemical Code requires only that remote shutdown devices be installed for all cargo pumps and similar equipment (see F.29 below).

---

14. Ventilation Standards and Rates

For information about ventilation standards and rates, refer to the CFR (46 CFR 153.312 and 153.316) and see Subpart F.3 of this Chapter.

---

15. Hoisting Arrangements

The Chemical Code does not specify a minimum lifting capacity for the pumproom hoisting arrangement. Specifications prescribed by home administrations are acceptable for foreign vessels possessing COFs. For more information, see Subpart F.29 of this Chapter or 46 CFR 153.332 for the relevant regulations.

---

16. Bilge Pumping

For the U.S. regulations concerning bilge pumping systems, see 46 CFR 153.334(b)(2). The Chemical Code does not require a bilge alarm in cargo pumprooms. See Subpart F.29 of this chapter for more information.

---

17. Venting System Outlets

This provision does not refer to flame screens. Additionally, the IMO Chemical Code does not contain specifications for mesh flame screens. Whenever foreign vessels carry flammable or combustible cargoes, flame screens must be installed in accordance with 46 CFR 30.10-25, 32.55-20, and 35.30-10. (46 CFR 153.352)

---

18. Venting System Flow Capacity

Section 2.13.2 of the Chemical Code includes the standards of 46 CFR 153.358. The pressure differential specified in the Code is 20 kPa gauge (2.9 psig) in lieu of 28 kPa gauge (4.06 psig).

The unit kPa equals 0.145 psi; see Appendix III to 46 CFR Part 153.

A COF is sufficient to document that a foreign vessel meets these requirements. (46 CFR 153.358.)

---

19. Venting System Restriction

Rupture discs may be used in series with pressure-vacuum valves. (46 CFR 153.360)

---

20. Required Closed Gauges

Many foreign and U.S. parcel tankers use float type closed gauging devices as portable gauging equipment. The Coast Guard accepts portable closed gauging in lieu of a permanent installation provided it is installed and operated according to the gauge manufacturer's instructions. Some float type gauges require the installation of guide wires to ensure proper operation; others have been designed so that guide wires are not necessary. The manufacturer's installation and operating manual must be maintained aboard vessels equipped with these gauges for reference should a question arise over the need for guide wires. Vessels must also have documentation from the manufacturer confirming that gauges can be used without guide wires. 46 CFR 153.404(d) also contains specifications for cargo sampling systems (although it does not require such installations).

---

21. Heat Transfer Systems

Foreign vessels must comply with the standards of their classification societies or home administrations. See Subpart F.29 of this Chapter for more information or 46 CFR 153.430 for the relevant regulations.

---

22. Heat Transfer Fluid

The heat transfer fluid requirements of 46 CFR 153.436 are intended to ensure that the heating medium and the cargo are compatible. Foreign vessels must comply with section 2.15.2 of the Chemical Code, which is equivalent to 46 CFR 153.436.

---

23. Cargo Pressure or Temperature Alarms

All foreign and U.S. vessels must meet either 46 CFR 153.438(a)(1) or (2) and 153.438(b). Section 2.15.5 of the Chemical Code refers only to a temperature measuring system.

NOTE: Section 153.438(b) exceeds section 2.15.5 of the Code, which does not require an alarm on the bridge.

The temperature and pressure sensing arrangements required by this section must be independent of other temperature or pressure sensing arrangements, in accordance with 46 CFR 153.438(c). Under 46 CFR Part 153, alarms are required only for cooling systems, while the IMO requires alarms if overcooling or overheating could result in a dangerous condition.

---

24. Inert Gas Systems

46 CFR 153.500, which relates to inert gas systems, is equivalent to section 2.19.3 of the Chemical Code with regard to inert gas generation (see Subpart F.29 of this Chapter for more information).

---

25. Special Requirements for Unusually Toxic Cargoes

46 CFR 153.525(c) specifies the placement of cargo pumps and calves for the carriage of unusually toxic cargoes. There are major differences between the 46 CFR 153.525(c) requirements and the IMO Chemical Code, which does not require pumps and valves for unusually toxic cargoes to be operable from the weather deck. Sections 2.10.4 and 4.13.3 of the Code address standards for pumps and valves, but do not impose a standard equivalent to 46 CFR 153.525(c). See F.29 of this chapter for more information.

46 CFR 153.525(d) gives heat transfer system requirements for the carriage of unusually toxic cargoes. 46 CFR 153.525(d) corresponds to section 2.15.6 of the Chemical Code. Its intent is to minimize the contamination of potable water, feedwater, other cargoes, and fuel by toxic cargoes. The most common heating system on existing ships uses low-pressure steam produced by the main propulsion boilers or by cargo-heating boilers located in the engineroom. Condensate drainage from the cargo tank heating coils is returned to the feedwater system by an inspection tank. Section 2.15.6(c) of the Code provides for this type of heating system. Although systems that meet the requirements of 46 CFR 153.525(d)(1) or (2), or sections 2.15.6(a) or (b) of the Code, are preferable, the steam heating system previously described is acceptable if the heating coil drainage returns to an inspection tank located on deck, within the cargo containment area. The inspection tank must be fitted with a drain valve to facilitate sampling of returns for cargoes that are clear and soluble in water, and therefore virtually impossible to detect

visually. If a vessel owner elects to use this or a similar system, they must demonstrate that the necessary safeguards have been incorporated in the design.

---

26. Toxic Vapor Detectors

Vapor detection equipment may be unavailable for some cargoes to which 46 CFR 153.526 applies. If the required equipment is unavailable for a particular toxic cargo that is transferred through a pumproom, the requirements of 46 CFR 153.336(b) must be applied. A vessel carrying a toxic cargo that is not piped through pumprooms, but rather through in-tank pumps, need not have the additional vapor detection equipment required by 46 CFR 153.336(b) (see Subpart F.29 of this Chapter for more details). Questions concerning the commercial availability of toxic vapor detectors for specific cargoes should be directed to Commandant (CG-ENG).

---

27. Special Requirements for Alkylene

Water spray requirements for propylene oxide are found in Section 4.7.21 of the IMO Chemical Code. Under 46 CFR 153.530(p), the water spray system must operate automatically, while section 4.7.21 of the Code does not require automatic operation of the water spray system. All foreign and U.S. vessels that handle alkylene oxides must comply with 46 CFR 153.530(p). See Subpart F.29 of this Chapter for more details.

---

28. Special Requirements for Acids

Litmus paper or similar indicators will satisfy the acid-detection requirements of 46 CFR 153.554(c).

---

29. Examination for Letter of Compliance (LOC)

Foreign vessels must be examined for compliance with the IMO Chemical Code. Foreign flag vessels holding IMO Chemical Code COFs must still satisfy certain design and equipment requirements from 46 CFR Part 153. These requirements are as follows:

a. A vessel transporting a cargo with vapor pressure that exceeds 100 kPa absolute at 37.8^{o}C must meet the requirements of 46 CFR 153.370, 153.371, and 153.438. (See 153.9(a)(2) and F.23 of this Chapter).

b. A vessel transporting alkylene oxides must meet the requirements of 46 CFR 153.530 (b), (d) and (p)(1). (See 153.9(a)(1) and F3 of this Chapter.)

The requirements of 46 CFR 153 Subpart C apply to all foreign flag vessels. For areas in which the Code's intent is unclear, 46 CFR Part 153 must be used as guidance. Questions should be referred to Commandant (CG-CVC). (46 CFR 153.808.)

---

30. Certificate Endorsements

Under 46 CFR 153.900(a), before a U.S. vessel is permitted to carry a cargo listed in Table I of 46 CFR 153, the vessel must have either a Certificate of Inspection (COI), Form CG-841 or a COI Amendment specifically endorsed for each cargo. The endorsement must list each cargo by name and the cargo tank(s) in which carriage is permitted. Hull type classification must also be shown on the form as "TANKSHIP/HULL TYPE (I, II, or III, as appropriate)."

---

31. Cargo Information Cards

46 CFR 153.907 requires the master of a vessel to have onboard certain information about cargo carried. Possible sources of cargo information include the shipper or manufacturer of the chemical, the CHRIS Manuals, and the I.C.S. Tanker Safety Guide. The card may be printed on both sides.

46 CFR 153.907 will be revised to reflect this.

---

32. Protective Clothing Required

The protective clothing requirement of 46 CFR 153.933 applies only to persons on the vessel forward of the after deckhouse, who are engaged in the jobs listed in 46 CFR 153.933. Therefore, this requirement would apply to terminal employees and personnel aboard the vessel who are engaged in any of those tasks.

---

33. Entry into Spaces

46 CFR 153.934(b) requires the master to ensure that personnel wear protective equipment with a self-contained breathing apparatus, if they enter cargo tanks, pumprooms, or void spaces that are not freed of toxic vapors or that lack sufficient oxygen to support life. This requirement applies to all cargoes listed in Table I of 46 CFR 153.

---

34. Standards for Marking of Cargo Hose

The requirements of 46 CFR 153.940 apply only to cargo hoses used to transfer cargoes listed in Table I of 46 CFR 153 to or from a parcel tanker, including terminal hoses that are involved in the transfer of Table I cargoes. See Subpart F.11 of this Chapter for more information.

---

35. Connecting a Cargo Hose

46 CFR 153.972 requires the person in charge of cargo transfer to use a hose that meets 46 CFR 153.940 requirements.

---

36. Plugged Scuppers for Inorganic Acids (33 CFR 155.310)

33 CFR 155.310 requires deck scuppers to be plugged as a condition for approving or continuing bulk liquid hazardous material cargo transfer operations.

a. It had been suggested that this prohibition against open scuppers may be inappropriate for certain cargoes. For example, inorganic acids are considered very corrosive to ordinary ferrous metals and alloys. The spill or leak procedures cited in the Chemical Data Guide for Bulk Shipment by Water recommend that certain inorganic acids (e.g., phosphoric acid) be flushed with large amounts of water. It follows that if an inorganic acid spill occurred on deck and could not be washed off due to plugged scuppers, then the vessel's deck plating might be harmed.

b. Following careful consideration of the matter, the Coast Guard determined that the prohibition against open scuppers is appropriate for inorganic acid carriers.

(1) Inorganic acids are considered Noxious Liquid Substances (NLS) under MARPOL, Annex II (Regulations for the Control of Pollution by Noxious Liquid Substances in Bulk). Annex II regulates the discharge of NLS according to their category of hazard classification.

(2) Under MARPOL Annex II, discharge of even the least harmful NLS, Category D, is prohibited unless it has been diluted to a concentration of 1 part of the substance in 10 parts of water. Therefore, scrupulous attention to duty during the cargo transfer process by cognizant personnel, in combination with the cargo discharge containment equipment required by 33 CFR 155.310(b)(3), are the primary means for protection from incidental spillage.

(3) Unplugged scuppers would potentially allow the release of spilled acid directly into a waterway before it could be adequately diluted.

c. Although inorganic acids do pose a corrosion hazard to ferrous materials, the potential for corrosion damage can be minimized by quickly diluting the spill or neutralizing it with appropriate agents. In only the most catastrophic scenarios might an untreated spill remain on deck long enough to cause significant damage to a vessel's deck plating. The possible environmental consequences resulting from an inadequately diluted inorganic acid spill entering a waterway through open scuppers greatly exceed the threat of structural damage to the vessel.

d. Accordingly, the requirement to plug deck scuppers applies regardless of the cargo type being carried. In addition, although discharge of a diluted inorganic acid may be acceptable within the parameters established in MARPOL Annex II, responsible personnel should bear in mind the obligation to comply with the hazardous material discharge reportable quantities criteria in 33 CFR Subpart B.

G. CHEMICAL BARGES

1. General

46 CFR Part 151, which regulates barges carrying certain bulk dangerous cargoes, became effective on 1 June 1970. 46 CFR Part 151 required the upgrading of existing barges not previously certificated under 46 CFR Parts 36, 38, 39, 40, and 98. The operating requirements in 46 CFR Part 151 apply to all barges. The intent of these regulations is the same as those for ships; containment of products to a degree commensurate with their hazards. Barges carrying chemical products that are flammable or combustible are certificated under 46 CFR Subchapter D (Tank Vessels). Vessels carrying only nonflammable products can be certificated under Subchapter D or Subchapter I (Cargo and Miscellaneous Vessels), at the owner's preference. If the owner does not indicate a choice, the barge must be certificated under Subchapter D. The barge’s COI will then be endorsed for the carriage of specific cargoes under 46 CFR Part 151.

2. Barges

The regulations for barges carrying certain bulk dangerous cargoes follow the same general format those for ships (i.e., general requirements for all chemical barges and a table of minimum and special requirements for individual products). Commandant (CG-ENG) establishes tentative minimum requirements for new cargoes. The shipper, all District Commanders (m), and the MSC are notified of these by letter.

3. Clarification

Since 46 CFR Part 151 was published, some confusion has arisen in terms of interpretation and application. To clarify these points, and to specifically address manned barges, a regulatory project has been initiated to revise 46 CFR Part 151. In the interim, questions involving manned barges or other areas open to interpretation in 46 CFR Part 151 should be referred to Commandant (CG-ENG) at 202-267-0103. Questions regarding minimum requirements for cargoes that are not listed in 46 CFR Table 151.05 should be referred to Commandant (CG-ENG) at 202-267-0214. For an index for 46 CFR Part 151, see NVIC 5-71.

H. COMPATIBILITY OF CARGOES (46 CFR PART 150, SUBPART A)

1. General

Cargo compatibility information is contained in 46 CFR Part 150, Subpart A, Compatibility of Cargoes. This subpart applies to all U.S. and foreign vessels subject to inspection. It gives a definitive answer to the question of whether two chemical cargoes are compatible and, therefore, whether they may be carried in adjacent tanks. Mixing of incompatible chemicals in a tank or pipe may cause a chemical reaction that generates significant heat or gas which can be very hazardous to personnel and property. 46 CFR 150.150 allows the Commandant to grant exceptions to the compatibility chart, according to experimental data submitted to support exception requests.

2. Testing Procedures

Appendix III describes the test procedure to be followed by a shipper or manufacturer developing cargo compatibility data. 46 CFR 150.160 requires the operator of a vessel carrying a cargo that is excepted under 46 CFR 150.150 but not listed in Appendix I, Exceptions to the Chart, to do the following:

a. Verify that Commandant (CG-ENG) has authorized, by letter or message, the pairing of cargoes as an exception to the compatibility chart.

b. Maintain a copy of the authorization letter or message aboard the vessel.

I. INSPECTION OF VESSELS CARRYING HAZARDOUS LIQUID CARGOES

1. Introduction

The amount and variety of unconventional, hazardous liquid cargo being transported in bulk by water is steadily increasing. Although the transportation and inspection hazards of petroleum products are generally well understood, newer commodities often have unusual properties, e.g., wide flammability limits, low ignition temperatures, foam incompatibility, or increased toxicity and reactivity. Marine safety personnel should be aware of special circumstances that may be involved in the shipment of hazardous materials in the marine environment.

2. References Concerning Hazardous or Dangerous Cargoes

All marine safety personnel who inspect vessels carrying hazardous/dangerous cargoes in bulk must become familiar with the chemical and physical properties of these products and the requirements of 46 CFR Parts 150, 151, 153, 154, and 154a. Chemical and physical property information can be obtained from the publications listed in subpart C.4 of this chapter.

3. Venting Systems Inspection

a. Solids shipped in molten form (sulphur, phenol). There are a number of products transported in tank vessels that may plug or coat flame screens and, in some instances, vent lines and pressure relief valves in cargo transfer piping.

(1) One such class of chemicals includes solids shipped in molten form, such as sulfur or phenol. Hot vapors from these molten materials rise and can condense and solidify in cooler vent pipes, vent lines, and flame screens.

(2) Plugged lines may eventually occur if such deposits are not cleaned when they build up. In severe cases, heating system trace lines may be necessary for cargo, relief, and vent lines.

b. Monomer substances. Another class of chemicals that can cause similar problems is the monomers, i.e., styrene, ethyl acrylate, methyl methacrylate, and vinyl acetate.

(1) Although these substances are inhibited in the liquid phase to help prevent self-reaction, the vapors are uninhibited and may polymerize (i.e., form chains of macro-molecules from smaller, reactive molecules) on the walls of the vent lines and flame screens.

(2) Buildup can occur after several years of service, in some cases much faster. Overfilling of a tank or sloshing of product in the tank during a voyage can also deposit liquid in the horizontal runs of a vent system; the liquid will solidify after depletion of the inhibitor. Specialized inspection scopes have been devised which will allow detection of polymer deposits in vent lines and should be employed.

c. Caution during inspections. Because of the potential problems of coated flame screens and blocked vent lines, these systems should be examined at each scheduled inspection to determine if chemical buildup is occurring.

(1) Cleaning will be necessary if substantial coating is detected. Buildup caused by polymerization may be very difficult to remove, requiring special solvents, scraping, or exposure to high temperatures.

(2) The owner or operator should be advised that an active maintenance program is needed to maintain safety equipment against polymer buildup.

(3) Safety of personnel must also be considered. Toxic product vapors that condense or are heavier than air may fall to the deck and endanger personnel.

(4) In many cases, the first loading and discharge of toxic cargoes should be witnessed by Coast Guard personnel, to ensure that all recognizable factors of personnel safety have been considered in the design of the system.

d. Toxic cargoes. 46 CFR 151.50-5(e) requires toxic cargo vapors from gravity type tanks to be controlled by using a Pressure/Vacuum (PV) valve.

(1) The minimum pressure setting of the PV valve is 0.21 kg/cm^2 gauge (3 psig) but must not exceed the design pressure of the cargo tank. The intent of this requirement is to reduce the probability of the cargo tank venting during operations other than transfers.

(2) The minimum setting of the PV valve and design pressure of the cargo tank should not be less than 0.21 kg/cm^2 gauge (3 psig).

(3) The installation of the proper PV valve should be verified for barges authorized to carry toxic cargoes in gravity type cargo tanks.

(4) The pressure and vacuum setting of this PV valve should be entered in the Marine Safety Information System (Vessel File Cargo System product set).

4. Carriage of Alkylene Oxides

a. General concerns. The dangers presented by alkylene oxides, such as ethylene oxide or propylene oxide, are threefold:

(1) They present a severe explosion hazard;

(2) They are carried under a nitrogen pad because they polymerize in the atmosphere. Any residual cargo can react in this manner and foul piping and fittings; and

(3) They are highly reactive, and may not be compatible with the alternate cargo. Saturated hydrocarbons (e.g., propane, butane, pentane, hexane) present no compatibility problems. However, alkylene oxides can react violently, sometimes explosively, with acids, bases, alcohols, aldehydes, amines, and other compounds.

b. Tank cleaning standards. For the reasons described above, the importance of thorough cleaning of alkylene oxide tanks cannot be overemphasized.

(1) Methods recommended for the satisfactory cleaning of such tanks are provided in NVIC 5-79, "Inerting and Tank Cleaning Procedures for Alkylene Oxide Containment Systems."

(2) Under 46 CFR 153.1011(a), tanks being taken out of propylene oxide service or being returned to such service from carriage of other cargoes must be cleaned to the satisfaction of the marine inspector. Prior to inspection, the inspector should be familiar with the procedures planned for cleaning a particular tank.

c. Alternate cleaning methods. Tank cleaning methods that differ from those outlined in NVIC 5-79 may be employed provided they are consistent with good cleaning practices, as outlined by a recognized authority, such as the National Fire Protection Association. In this regard, there should be no evidence of residue and a marine chemist certificate should be provided. When the cleaning is completed to the inspector's satisfaction and the tank is inerted, alkylene oxide may be loaded. See MSM Volume II, Material Inspection, COMDTINST M16000.7A (series), Chapter A5 concerning the role of the marine chemist.

CHAPTER 4: CARRIAGE OF BULK LIQUID GASES

A. GENERAL CONSIDERATIONS

1. Introduction

Like bulk liquid chemicals, bulk liquefied gases are evaluated for shipment according to their particular properties. Liquefied gases have most of the same properties as liquid chemicals. The procedures outlined in MSM Volume II, Material Inspection, COMDTINST M16000.7A (series), Chapter F1 for evaluating new products and establishing minimum requirements are also used to evaluate bulk liquefied gases for shipment. Some gases, such as the alkanes (methane, ethane, propane, etc.), have flammability as their primary hazard. Others are nonflammable but highly toxic, such as chlorine and sulfur dioxide. Still others are corrosive, capable of polymerization, unstable, or incompatible with common materials of construction. Some combinations of liquefied gases are incompatible; others require inhibition, as do liquid chemicals. Most gases carried in bulk are designated as "cargoes of particular hazard" in 33 CFR 126.10 because of their potential ability to cause damage over large areas.

2. Liquefaction Techniques

When gases are carried in bulk, they are normally liquefied by compression, refrigeration, or both. Thus, they are carried in "unnatural" states, possessing tremendous amounts of potential energy. To contain them during carriage, their pressures or temperatures must be maintained. Under Coast Guard regulations, a cargo tank for gases must be able to withstand the vapor pressure of the cargo at 45°C or have reliquefaction equipment. The only exceptions to this rule are tanks that carry Liquefied Natural Gas (LNG) (methane) or nitrogen.

NOTE: Nitrogen is not currently carried as a cargo, but is carried as an inert gas.

Methane cannot be liquefied by pressure alone at temperatures above -82.2°C. Reliquefaction of methane is not currently practical on ships because the process requires very large refrigeration plants. Consequently, the boil-off vapors from LNG tanks are burned in the ship's boilers in order to control temperature and pressure within the cargo tanks without venting to the atmosphere.

3. Determination of the Gaseous State

The breakpoint between liquids and gases for purposes of the regulations is somewhat arbitrary. In the past, the breakpoint has been a Reid Vapor Pressure (RVP) of 276 kilopascal (kPa) absolute (40 psia). However, when the International Maritime Organization (IMO) developed the IMO Gas Code, certain products with RVPs below 276 kPa absolute were included. The Coast Guard regulations for gas ships now apply to cargoes with an RVP of 172 kPa absolute (25 psia) or higher. This includes the products that the IMO has included in the IMO Gas Code. The IMO Code has also been amended to allow the carriage of seven high vapor pressure chemicals previously allowed only on chemical tankers: propylene oxide, isoprene, isopropylamine, diethyl ether, monoethylamine, vinylethyl ether, and vinylidene chloride. All of these have an RVP between 101 and 172 kPa absolute. Although these products do not meet the definition of a liquefied gas, they have been considered for carriage on gas ships. Special requirements for their carriage are similar to those for chemical carriers. U.S. gas ship regulations will be revised in the future to include these products.

4. Addressing the Carriage of LNG

The Coast Guard has published a guide to LNG: Liquefied Natural Gas and Liquefied Petroleum Gas - Views and Practices, Policy and Safety, Commandant Instruction (COMDTINST) M16616.4. Ports that handle LNG ships have also published contingency plans concerning LNG incidents.

B. NEW GAS SHIPS

1. Introduction

"New" gas ships are defined under the IMO Gas Code for New Ships and 46 CFR Part 154 as ships contracted after 31 October 1976, having a keel laid after 31 December 1976, or delivered after 30 June 1980. Any ship that meets the standards of this code, regardless of its age, may be issued a Certificate of Fitness (COF).

2. Containment of Cargo

The major difference between a gas ship and an ordinary tanker is the cargo containment system. Due to a wealth of available information about containment systems in use (mostly about LNG tanks), this is not discussed in detail here. An overview of the types of tanks used on gas carriers follows:

a. Integral gravity tanks. These are similar to conventional tanks on ordinary tankers. They cannot be used for cargoes carried below -10°C without special approval, and are generally not approved for pressures above 24.5 kPa gauge (3.55 psig). As a result, they are rarely encountered on gas ships.

b. Membrane tanks. As the name implies, these are very thin-walled tanks. They are not self-supporting and they must have a full secondary barrier, essentially another tank, surrounding the primary barrier. The primary and secondary barriers and the insulation are all supported by the inner hull of the vessel. These tanks are capable of withstanding very low pressures only, internally and externally. They are used primarily for carriage of LNG.

c. Semi-membrane tanks. These are similar to membrane tanks. However, they are self-supporting when empty, and thus may be built apart from the ship's hull and subsequently lowered into it. They have not been widely used.

d. Independent tanks. There are three types of independent self-supporting tanks, or tanks that can be built outside the ship's hull. They do not form part of the ship's hull and are not essential to hull strength.

(1) Type A. These are prism-shaped tanks having internal or external stiffeners. They are required to have secondary barriers, and are very common on gas ships.

(2) Type B. These tanks are very much like pressure vessels, except that the weight, rather than the vapor pressure, of the cargo is the predominant design parameter. They do not fully meet the design criteria for pressure vessels. However, their rounded forms are easier to analyze than Type A tanks. As a result, they are only required to have a partial secondary barrier, which is essentially an extremely large drip pan. The primary example of this type is the large spherical tank aboard an LNG ship. These tanks are designed to withstand about 207 kPa gauge (30 psig), although in practice the safety relief valves are set to relieve at pressures below 69 kPa gauge (10 psig).

(3) Type C. True pressure vessels, these are very common in gas ships other than LNG carriers. They may or may not be refrigerated and insulated, and no secondary barrier is required.

3. Regulatory Safety Factors

All tank types except Type C independent tanks are heavily instrumented, with gas detection equipment in the hold and interbarrier spaces, temperature sensors, and pressure gauges. Hold spaces for tanks other than Types B and C must be inerted if the cargo is flammable. Hold spaces for Type B tanks or refrigerated Type C tanks may be filled with dry air with a dew point of -45°C or lower; ships with Type B tanks must be capable of inerting the largest hold space rapidly if a leak is detected. 46 CFR Part 154 requires higher safety standards than the IMO Gas Code, as outlined in the following subparagraphs:

a. Design of type B and C tanks. U.S. regulations dictate that type B and C tanks must be designed with an allowable stress factor of A = 4.0. The IMO Gas Code makes provisions for indicating compliance with the U.S. standard by listing the allowable stress factors on the COF. U.S. and foreign vessels must meet this standard.

NOTE: The IMO Gas Code permits the use of an A = 3.0 factor for some materials.

b. Design ambient temperatures. Except for vessels with independent Type C tanks, the U.S. regulations require lower ambient design temperatures than the IMO Gas Code does. The vessel's COF must show the design temperatures. A foreign ship will not be issued a Letter of Compliance (LOC) if it has not met the U.S. standard.

c. Cargo tank pressure/temperature control. U.S. regulations do not permit the same options as the IMO Gas Code for controlling cargo temperature and pressure by periodic venting or operational restrictions on voyage length or locale. Commandant (CG-ENG-5) verifies that Coast Guard requirements are met, based on special classification society certification.

d. Enhanced steel grades. Under 46 CFR Part 154, vessels are required to use enhanced grades of steel at the sheer strake, deck stringer, and bilge strake for crack arresting purposes.

(1) The rules of some classification societies permit the construction of large LNG carriers with the entire outer shell made of Grade A steel. No strakes of material with enhanced notch toughness properties, to act as crack arresters, would be required.

(2) Because of possible crack initiation from a spill of cryogenic liquid, the Coast Guard requires enhanced grades of steel with enhanced crack arresting properties in the sheer strake, the deck stringer, and the bilge strake. This requirement must also be met for LOC gas ships (there is no indication of this

on the COF). Commandant (G-MTH-1) verifies that crack arresting steels have been used before accepting an LOC application, by requiring appropriate classification society certification.

4. Relationship Between Regulations and the IMO Gas Code

a. General. Other than the operating requirements and the higher standards described above, the U.S. regulations follow the IMO Gas Code as closely as possible. In fact, the regulatory sections were numbered to correspond to the chapters of the IMO Gas Code (e.g., 46 CFR 154.900 correspond to Chapter IX of the Code).

(1) Because of the similarity, a valid IMO COF issued under the Gas Code for New Ships is generally accepted by the Coast Guard as evidence of compliance with all of 46 CFR Part 154, other than the special standards listed in B.3 of this Chapter.

(2) The regulations contain certain operating requirements in addition to those in the IMO Gas Code, namely Subpart E of 46 CFR Part 154. These are applicable to foreign vessels, except as indicated.

b. Certification of Compliance. Since a U.S. gas ship that complies with 46 CFR Part 154 will also meet the requirements of the IMO Gas Code, the Officer in Charge, Marine Inspection may issue the vessel a COF. The information needed to complete the COF must be supplied by the Marine Safety Center.

(1) It is not mandatory for a U.S. ship to have a COF, but the owner will probably request one.

(2) Liquefied gas ships are certificated under 46 CFR Subchapter D (Tank Vessels), and endorsed to carry specific cargoes under 46 CFR Part 154 (Subchapter O).

(3) New gas ships may also be certificated to carry liquid chemicals under 46 CFR Part 153. They must, however, meet all requirements of 46 CFR Part 153 for such certification.

C. EXISTING GAS SHIPS

1. Criteria for Designation

Every gas ship that does not meet the new ship definition in 46 CFR Part 154 is an existing gas ship. The Coast Guard recognizes that many of the gas ships that will be active for the next several decades were under construction or already contracted for at the inception of the Gas Code for New Ships. Although the IMO Gas Code does not strictly apply to these vessels, IMO urges all governments to apply the New Ship standards as far as reasonable and practicable, considering their stage of construction at the time of the IMO Gas Code's inception. This was accomplished by IMO Resolution A.329(IX). These vessels are issued an IMO A.329(IX) Certificate, which indicates that they meet the Gas Code for New Ships, except for the items listed in an enclosure to the A.329 COF. For convenience and common reference, these vessels are known as “A.329 ships.” A second category of existing gas ships includes those that were in service at the time the IMO Gas Code was written. Major changes to these vessels were not required or expected, due to the excellent safety record of gas ships. However, some upgrading of existing ships, particularly in firefighting equipment, has been required. IMO developed another code, the Gas Code for Existing Ships, to specifically address these ships. The required upgrades were included in this code, and compliance was required on a 2 or 6 year schedule, depending upon the extent of modification necessary for each specific upgrade. Since the Gas Code for Existing Ships was adopted in 1975, all upgrades, including those with a 6-year lead time, are now in force.

2. Upgrading Standards

The first few LNG ships built for U.S. registry are in the A.329 category and are treated in accordance with Resolution A.329(IX). These vessels’ COFs carry a few endorsements listing areas not in compliance with the Gas Code for New Ships, Resolution A.328(IX). IMO Resolution A.329(IX) requires that these ships comply in full with the Gas Code for Existing Ships. The Coast Guard is not adopting the Gas Code for Existing Ships in full, since some of its standards are lower than those required under U.S. regulations and the LOC Program. However, a future revision to 46 CFR Part 154 may require existing gas ships to meet all of the upgrading requirements specified by the Code. Once the regulations are amended they will detail the procedures and certification necessary for issuance and renewal of the LOC for existing vessels. The Coast Guard envisions that LOC vessels will be required to possess a COF prior to reissuance of an expired LOC. At the present time, 46 CFR Part 38 should be used as guidance for examinations of existing gas ships holding LOCs. In cases where a COF issued under the Gas Code for Existing Ships was used in part by Commandant (CG-ENG-5) for acceptance of a vessel, that code should also be used for guidance during an LOC examination.

D. BARGES CARRYING LIQUEFIED GASES

1. Introduction

The regulations for barges carrying liquefied gases with the primary hazard of flammability (e.g., the alkanes and alkenes) are found in 46 CFR Part 38. Regulations for barges carrying liquefied gases with different or additional hazards are found in 46 CFR Part 151. The latter group includes ammonia, chlorine, butadiene, and vinyl chloride.

2. Chlorine Barges

In the United States, chlorine may only be carried on barges. Because of its extremely dangerous nature, barges carrying chlorine are handled somewhat differently than most gas barges. Existing barges, acceptance of which was grandfathered under 46 CFR Part 151, have had wing tanks installed. These are called Type 1-S barges. Due to the unique operating procedures for chlorine transfer, the Commandant has allowed the quick-closing, remote-activated valves required by 46 CFR Part 151 to be kept ashore when not in use. This arrangement is possible because the chlorine industry, for the most part, uses standardized fittings so that fit-up is not a problem. The valves may be under the control of a tankerman located ashore, as no one is normally on the barge during transfer. If personnel are on the barge during transfer operations (but not during fit-up of hoses, etc.), at least one remote shutdown valve must be on the barge.

3. LNG Barges

To date, only one LNG barge has been built; it is presently not in LNG service. LNG barge designs are unique since they can neither refrigerate the cargo nor contain the vapor pressure of the cargo at 45°C, as barges carrying other gases are required to do. To ensure that LNG vapors are not vented under normal conditions, LNG barges must contain the boil-off for twice the voyage length or 45 days, whichever is greater.

4. Liquefied Hydrogen and Oxygen Barges

Currently, liquefied hydrogen and liquefied oxygen have been shipped by the National Aeronautics and Space Administration exclusively on barges operated as public vessels. No commercial barges have been approved to carry these cargoes.

A. LETTER OF COMPLIANCE (LOC) WITH SUBCHAPTER O ENDORSEMENT PROGRAM

1. Introduction

In the early 1960's, it was recognized that most bulk dangerous cargoes were being carried on foreign vessels. The 1960 International Convention for the Safety of Life at Sea (SOLAS) and the regulations in 46 CFR Subchapter D did not adequately address these ships. Accordingly, the Commandant established the Letter of Compliance (LOC) Program to ensure the safe operation of these vessels. The original LOC Program was limited to the integrity and operation of the cargo containment section of the vessel and related systems, such as firefighting equipment. It did not address aspects of ship design and equipment. Lifeboats, engine rooms, accommodations, and pollution prevention requirements were handled separately. This separation of functions led to some confusion on the part of ship owners and operators and Coast Guard inspectors. Under this program, masters were issued a LOC from the Commandant, a letter affirming their compliance with pollution prevention regulations (a "letter of compliance") from the Officer in Charge, Marine Inspection (OCMI), and a Tank Vessel Safety Letter. Not only were there different documents issued, but the vessels were often examined by several different Coast Guard boarding teams in the same port. To eliminate such redundancies, the Commandant adopted a revised LOC Program on 16 February 1978. Current aspects of this LOC Program are detailed in the discussion of the 46 CFR Subchapter O endorsement to the LOC in MSM Volume II, Material Inspection, COMDTINST M16000.7A (series), Chapter D6. Figure F5-1of this Chapter lists the regulations pertaining to and documents required by foreign tank vessels entering U.S. waters.

2. International Maritime Organization (IMO) Codes and Certificates

a. Program rationale. The International Maritime Organization (IMO) Codes described in MSM Volume II, Material Inspection, COMDTINST M16000.7A (series), Chapter F1 have eliminated the need for Coast Guard plan review for most foreign vessels. However, this does not mean that the LOC Program has been abandoned.

(1) Because IMO Certificates of Fitness (COFs) may be issued erroneously, and because some special U.S. requirements exceed IMO standards, the LOC Program remains necessary. In addition, the LOC is a vehicle for maintaining control over these vessels and ensuring compliance with IMO safety standards.

(2) IMO Codes are recommendations, and are viewed by some administrations as strictly voluntary. Waivers, dispensations, and exemptions are common. For

the Coast Guard to maintain the standard of safety established by the initial LOC Program, some control is necessary.

(3) Because plan review is no longer conducted for most vessels, effective examination of vessels for issuance of a LOC has become more important. Codes, regulations, plan reviews, and certificates, no matter how well drafted and executed, will not replace a thorough examination. This is the primary reason for issuance of LOCs by the OCMI, rather than the Commandant.

b. Requirements for certification. Some foreign ship owners elect to seek a LOC based on plan review, rather than based on possession of an IMO COF. To eliminate this practice, and to have other administrations assume greater responsibility for their ships, the possession of an IMO Certificate is becoming mandatory.

(1) Under 46 CFR Part 153, a foreign chemical tanker must have a valid COF to obtain a LOC; the same requirement applies to new liquefied gas ships under 46 CFR Part 154.

(2) At present, existing gas ships are not required to possess a COF and may apply for a LOC under Coast Guard plan review. Similarly, LOCs previously issued to existing gas ships based on plan review remain acceptable on that basis.

(3) In practice, many gas ships now applying for LOCs submit IMO certification that documents areas of compliance and noncompliance with the Gas Codes for New and Existing Ships. In many cases, this eliminates the need for plan review. When the standards in the IMO Gas Code for Existing Ships are adopted into U.S. regulations, all existing gas ships will be required to possess a COF to obtain a LOC.

NOTE: Because some administrations do not issue IMO COFs, their ships will not be able to obtain them. Such vessels must be examined as though they were U.S. vessels.

FIGURE F5-1:
APPLICABLE REGULATIONS AND REQUIRED DOCUMENTS FOR FOREIGN-FLAG TANK VESSELS ENTERING U.S. WATERS

	Coast Guard Regulations	IMO Codes	Documents
Chemical / Liquefied Gas Unmanned Barges	46 CFR Part 151; 46 CFR Parts 30-40; or 46 CFR Parts 90-109.	None.	Coast Guard-issued Letter of Compliance (USCG LOC).
Chemical Tankships	SOLAS[2]; 33 CFR Parts 155, 159, and 164; or 46 CFR Part 153.	Code for the Construction and Equipment of Ships Carrying Dangerous Chemicals in Bulk, Res. A.212(VII) (IMO Chemical Code).	USCG LOC; Certificate of Fitness[3]; Comms. Certificate[4]; Safety Equipment Certificate; Safety Construction Certificate; Load Line Certificate.

Notes:

1 See 46 CFR 154.1 for definitions.
2 A foreign flag vessel whose flag administration is not signatory to SOLAS must meet the requirements of 46 CFR, Subchapter D.
3 A foreign flag vessel whose flag administration issues an IMO Certificate of Fitness must have this.
4 Radiotelephony and Radiotelegraphy Certificates.

FIGURE F5-1 (CONTD): APPLICABLE REGULATIONS AND REQUIRED DOCUMENTS FOR FOREIGN-FLAG TANK VESSELS ENTERING U.S. WATERS

	Coast Guard Regulations	IMO Codes	Documents
New Gas Carriers[1]	SOLAS[2]; 33 CFR Parts 155, 159, and 164; and 46 CFR Parts 154.	Code for the Construction and Equipment of Ships Carrying Liquefied Gases in Bulk, Res. A.328(IX) (IMO Gas Code for New Ships).	USCG LOC; Certificate of Fitness[3]; Comms. Cert.[4]; Safety Equipment Certificate; Safety Construction Certificate; Load Line Certificate.
Existing Gas Carriers[1]	SOLAS[2]; 33 CFR Parts 155, 159, and 164; and 46 CFR Part 38.	IMO Code for Existing Ships Carrying Liquefied Gases in Bulk, or Recommendations Concerning Ships not covered by the Gas Code for New Ships, Res. A.329(IX).	LOC (Issued by USCG) Comms. Certificate[4] Safety Equipment Certificate Safety Construction Certificate Load Line Certificate

Notes:

1 See 46 CFR 154.1 for definitions.
2 A foreign flag vessel whose flag administration is not signatory to SOLAS must meet the requirements of 46 CFR, Subchapter D.
3 A foreign flag vessel whose flag administration issues an IMO Certificate of Fitness must have this.
4 Radiotelephony and Radiotelegraphy Certificates.

3. Sequence of Determinations

To identify regulations concerning hazardous liquids and gases carried in bulk that are applicable to a given vessel and cargo, a "decision tree" is provided in Figure F5-2. The user should start from the left side and gradually work to the right by answering the questions "yes" or "no" to identify the regulation(s) applicable to a particular vessel.

B. CARRIAGE OF BULK HAZARDOUS SOLIDS

1. General Procedures

The requirements for marine shipment of bulk hazardous solids are found in 46 CFR Part 148 (Carriage of Bulk Solid Materials that Require Special Handling). Products that may be shipped in bulk are listed in 46 CFR 148.01-7. The properties of a material that make it hazardous are briefly described in Table 46 CFR 148.01-7(a). These regulations are somewhat similar to the bulk liquid regulations in 46 CFR Part 153 in that they provide general requirements for all hazardous solid cargoes and special requirements for individual materials. However, under 46 CFR 148.01-9, an unlisted cargo may not be transported without permission of Commandant (CG-ENG-5). This differs from the rules for bulk liquids in that it only applies if the shipper determines that the material meets the definition of a hazardous material in 49 CFR 171.8. If the material meets this definition and is not listed by name in Table 46 CFR 148.01-7, Commandant (CG-ENG-5) will review the properties of the material. If the material can be safely transported in bulk, the Coast Guard will issue a special permit describing the necessary procedures and handling requirements. This special permit must be maintained aboard the vessel whenever the hazardous material is being moved. Special permits are given expiration dates, usually 2 years from the date of issuance.

2. Communications with Headquarters

There are relatively few materials listed in 46 CFR Part 148. Most bulk solid cargoes either do not meet the definition of a hazardous material in 49 CFR 171.8, or are shipped under special permit. When in doubt about a particular cargo, contact Commandant (CG-ENG-5) at
(202) 372-1401.

C. CARRIAGE OF INTERMODAL PACKAGES AND PORTABLE TANKS

1. Introduction

49 CFR Subchapter C gives the Office of Hazardous Materials Transportation (OHMT), Department of Transportation (DOT), the authority for the regulation of packaged shipment of hazardous materials. The 49 CFR Subchapter C regulations for packaged hazardous materials pertain to any material that is loaded and offloaded in an intact container (drum, box, portable tank, barrel, tank truck, or railroad tank car).

The Coast Guard has the responsibility to enforce these regulations on vessels, but may not issue, amend, waive, or issue exemptions to the regulations under 49 CFR 107. However, the Coast Guard does have the authority to issue certain approvals. Some of these approvals are issued by the Commandant (see 49 CFR 176.76(a) and 176.340), and others by the district commander (see 49 CFR 176.88). The Captain of the Port (COTP) can also approve alternative stowage procedures under 49 CFR 176.65. As these approvals are provided for in the regulations, they are not considered exemptions.

---

2. Exemption Procedures

Exemption procedures are contained in 49 CFR 107. Although only the OHMT can issue exemptions, they consult the Coast Guard if the shipment involves marine transportation. The regulations also provide for emergency exemptions in the case of severe economic loss or threat to life. In such a case, the shipper should contact Commandant (CG-ENG-5), which will forward the request to the OHMT. If a shipment is being made under the provisions of an OHMT exemption, the shipper must indicate the exemption number on all shipping papers and attach a copy of the exemption to the shipping papers.

---

3. Application of Regulations

a. The regulations include specific labeling requirements, both IMO classification and labeling, with corresponding DOT classification for shipment by other modes of transportation (49 CFR 171.12(b)). A summary of these requirements follows:

(1) General. Under 171.12(b) and (f), hazardous materials may be shipped if any portion of the transportation is by vessel between points in a state or between states, or if they are prepared in accordance with the Optional Hazardous Materials Table in 49 CFR 172.102. This does not apply to Class A and Class B explosives or radioactive materials. The Optional Table is derived from the International Maritime Dangerous Goods (IMDG) Code. This option facilitates the shipment of hazardous materials in international trade. Accordingly, hazardous material may be transported by any mode under the proper shipping

name, classification, and label specified by the Optional Table in 49 CFR 172.102, provided that the following are true:

(a) The shipper includes the name of the DOT class that most closely corresponds to the material's IMO class in the description of the hazardous material (on the shipping documentation).

(b) The hazardous material is otherwise shipped in accordance with the DOT regulations.

(c) Column 1 of the hazardous material's entry in the Optional Hazardous Material Table does not contain the letter "N." The letter "N" means that the entry is not an acceptable alternative and the material must be transported under the appropriate entry in 49 CFR 172.101.

(2) Exemption from Coast Guard control. Materials that are listed in the IMDG Code but not regulated by DOT are not subject to Subchapter C. Such materials are therefore exempt from Coast Guard enforcement action. To eliminate confusion in transporting such materials, shippers should include a notation on the shipping papers that the material is only regulated under the IMDG Code.

(3) Example. Triisobutyl aluminum would be shipped domestically as "Pyrophoric liquid, n.o.s. (triisobutyl aluminum), flammable liquid, UN 2845." For import or export, under the provisions of 49 CFR 171.12(b), 172.102, 172.201(a)(4)(i), and 172.203(i)(2), it may be shipped as "Triisobutyl aluminum, flammable liquid, 4.2, UN 1930, spontaneously combustible." The package must have the "SPONTANEOUSLY COMBUSTIBLE" label. The "FLAMMABLE LIQUID" label may also be affixed, as provided by 49 CFR 172.401(a).

NOTE: IMO placarding is accomplished with an enlarged "SPONTANEOUSLY COMBUSTIBLE" label. For domestic transportation, the IMO placard and a "FLAMMABLE" placard are acceptable.

b. Transportation by water outside the United States. For the relevant regulations, see 49 CFR 172.203(i)(2)) and 49 CFR 172.302(b).

(1) When a mixture contains more than one hazardous material, the technical name required in parentheses is the name of the constituent that is of the same hazard class as the total mixture.

(2) If a mixture is labeled with any subsidiary labels, the technical name of the material that compels the use of the subsidiary label must also be shown.

(3) When a mixture contains more than one material of the same hazard class, which results in that class or label being applied, only the technical name of the material that is the predominant reason for the class of label must be shown.

(4) When a mixture contains more than one material of the same hazard class in approximately the same percentages, only the name of the material with the highest level of hazard in the class (e.g., lowest flashpoint, most toxicity, etc.) need be shown.

c. Shipper's certification: See 49 CFR 172.204.

(1) Carriage to the marine terminal. The highway common carrier, whether or not it is the initial carrier, must tender shipping papers to the marine terminal.

(a) 49 CFR 171.2 provides that "no person may offer or accept a hazardous material for transportation...unless that material is properly classed, described, packaged, marked, labeled, and in the condition for shipment as required by [49 CFR Subchapter C]."

(b) In addition, 49 CFR 177.817(a) states that "a carrier may not transport a hazardous material unless it is accompanied by a shipping paper that is prepared in accordance with [49 CFR] 172.201, 172.202, and 172.203..."

(c) Intermediate or interline motor carriers must accurately transfer all of the information required by 49 CFR 172.201, 172.202, and 172.203 (see 49 CFR 177.817) from the original shipping papers.

(2) Marine shipment. The marine carrier may not transport hazardous materials without a certificate prepared in accordance with 49 CFR 172.204.

(a) As the shipping papers presented by the interline motor carrier are not required to include this certificate, the marine carrier must obtain the shipper's certification from the shipper or the shipper's authorized representative.

(b) Shippers often satisfy this requirement by preparing a dock receipt, which the shipper certifies and forwards to the carrier before shipment. In other cases, arrangements are made with motor carriers to provide a copy of a certified shipping paper when the shipment is delivered to the pier.

(c) Regardless of method, this certification is the shipper's responsibility. A preprinted signature on the shipping document is not acceptable because it is made before the applicable conditions and acts have come into existence.

d. Reuse of packaging (49 CFR 173.28). Much hazardous materials packaging is durable and can be reused, either for shipping or other uses. 49 CFR 173.28 places restrictions and requirements on the reuse of such packaging.

(1) 49 CFR 173.28 requires that all old hazardous materials markings and labels are removed or obliterated before the packaging is used for other materials.

(2) Except under certain specified conditions, 49 CFR 173.29(d) prohibits empty packaging bearing hazardous materials markings or labels from being used for transportation unless it contains some of the hazardous material for which the markings are required.

(3) These restrictions apply even if the packaging is used for purposes other than transportation in the traditional sense. Offering such a package for sale is considered to be offering it for transportation.

e. Consumer commodities (49 CFR 173.1200). Packages in compliance with these requirements may be combined in a strong overpack with a gross weight that exceeds 65 pounds. The overpack, when marked in accordance with 49 CFR 173.25, can be shipped as a consumer commodity. The 65-pound restriction is intended to limit the weight of individual packages, not the additional overpack (not required by 173.1200).

f. Interchangeability of IMO and DOT requirements (49 CFR 176.11(a)). Hazardous materials, except for Class A and B explosives and radioactive materials, may be transported by vessel when to the material's packaging, marking, labeling, classification, description, certification, and placarding complies with the IMDG Code. All hazardous materials must otherwise be stowed and carried in accordance with 49 CFR Subchapter C.

(1) Differences in the stowage and segregation requirements of the DOT and IMO regulations are generally minor, and may be handled by the COTP through approval of alternate stowage procedures authorized by 49 CFR 176.65.

(2) The word "may" indicates the optional nature of such authorization. For example, if a hazardous material is packaged in accordance with DOT but is described, labeled, etc., in accordance with the IMDG Code, it is acceptable for marine shipment.

g. Motor vehicles and their equipment (49 CFR 176.905(1)). The term "equipment" includes any devices related to the functioning of a motor vehicle or other mechanized equipment. Each item will be considered on an individual basis, with the following general exceptions. Fire extinguishers are related to the functioning of vehicles in which they are carried because they are essential to fight any fires in the vehicle. By the same reasoning, tire inflators in vehicles also are directly related to their functioning. This does not include oxygen tanks, because they are not used directly in association with operation of the vehicle.

(1) Motor vehicles themselves may be shipped as non-hazardous cargo, if--

(a) Their fuel tanks are emptied;

(b) Their engines are run until they stall for lack of fuel;

(c) Their battery cables are disconnected; and

(d) No hazardous materials are stored in them.

NOTE: Residual amounts of fuel left in motor vehicle tanks are acceptable. Stringent enforcement measures, such as the use of listening tubes, are not required for determination that a tank is empty.

---

4. Intermodal Portable Tanks

A portable tank is a container with a capacity of more than 110 U.S. gallons, which is designed to be loaded into or on, or temporarily attached to, a transporting vehicle or vessel. It may be equipped with skids, lifting lugs, or intermodal container corner castings to facilitate handling.

Certain DOT and Coast Guard specification portable tanks are explicitly authorized by Subchapter C for the carriage of particular regulated commodities. When a regulated commodity is shipped in such a tank, the marking, labeling, and placarding requirements of 49 CFR Part 172 apply.

Regulated commodities may be transported in non-specification portable tanks when authorized by OHMT exemption or a Coast Guard Letter of Authorization for combustible liquids (see 49 CFR 176.340). When inspecting a portable tank carrying a regulated commodity, the inspector should be alert to the following items:

a. Evidence of any leakage from valves, attachments, or safety relief devices.

b. Proof that hydrostatic testing has been performed within the prescribed period.

c. Evidence that all required inspections have been performed in a timely manner.

d. Evidence that securing and handling attachments are sound.

e. Evidence of compliance with any special handling or stowage requirements dictated by regulations or exemptions.

---

5. Radioactive Materials

Radioactive materials are regulated under Subchapter C along with other packaged hazardous materials. For requirements radioactive materials shipments, see 49 CFR Part173, Subpart I. The following pamphlets concerning radioactive materials have been published jointly by DOT and the Nuclear Regulatory Commission (NRC), and may be obtained from Commandant (CG-ENG-5):

a. A Guide for the Inspection of Radioactive Material Shipments by Motor Vehicle or at Freight Facilities; and

b. A Review of the Department of Transportation (DOT) Regulations for Transportation of Radioactive Materials.

---

6. Liquid Materials Toxic by Inhalation

There are special requirements for liquids that are toxic by inhalation. Any material that meets the toxicity criteria found in 49 CFR 173.3a is subject to these requirements.

The following materials are known to be toxic by inhalation:	
Acetone cyanohydrin*	Methyl bromide
Acrolein, inhibited	Methyl chloroformate
Allyl alcohol	Methylchloromethyl ether
Allylamine*	Methylhydrazine
Bromine trifluoride	Methyl isocyanate*
n-Butyl isocyanate*	Monochloroacetic acid, liquid
Chlorine trifluoride	Nickel carbonyl
Chloroacetonitrile*	Nitric Acid, red fuming
Chloropicrin	t-Octylmercaptan*
Crotonaldehyde*	Pentaborane
Dimethylhydrazine, unsymmetrical	Phosphorus oxychloride
Ethyl chloroformate	Phosphorus trichloride
Ethylene chlorohydrin*	Propionitrile*
Ethyleneimine	n-Propyl chloroformate*
Ethyl isocyanate*	Tetramethoxy silane*
Isopropyl chloroformate*	Tetranitromethane
Mesitylene	Titanium tetrachloride
Methacrylonitrile	Trimethoxy silane*

All of these materials must have "Poison-Inhalation Hazard" as a description on the shipping papers and be in a packaging with a primary containment unit greater than 1 liter (49 CFR 172.203(k)(4)). The material's packaging, which must have a primary containment unit greater than 1 liter, and packaging of less than 110 gallons, must also be marked "Inhalation Hazard" (49 CFR 172.301(a)). Furthermore, such packages must be labeled and placarded as poisons. In addition, those materials with an asterisk (*) in the above table are shipped as not otherwise specified materials. These must be transported in either a Poison A packaging or a packaging approved by the Director, OHMT, Transportation (Research and Special Programs Administration). The approval is in the form of a letter and approval number. Poison A packaging is any appropriate packaging listed in the Poison A materials packaging sections, 49 CFR 173.328 through 173.337. Other packaging is approved on an individual basis.

D. CARRIAGE OF MARINE PORTABLE TANKS

Marine Portable Tanks (MPTs) are liquid-carrying containers that are not permanently installed on the vessel. MPTs may be on or offloaded when filled or when empty, or filled and discharged while aboard a vessel. For the regulations for MPT use, see 46 CFR 98.30. MPTs are limited to carriage of certain listed cargoes (see 46 CFR 64.9, 90.05-35, and 98.30-3). Authorization under 46 CFR 98.35 to carry combustible liquids aboard vessels in portable tanks constructed and inspected before 1 October 1974, was terminated on 1 October 1984. See MSM Volume II, Material Inspection, COMDTINST M16000.7A (series), Chapter F2 for further information on MPTs.

E. CARRIAGE OF EXPLOSIVES

1. Commercial Explosives

Commercial explosives, like other packaged hazardous materials, are shipped under 49 CFR Subchapter C. The shipment of Class A explosives in intermodal freight containers requires special approval from Commandant (CG-ENG-5). See Paragraph E.3 of this Chapter for more details. The approval document specifies--

a. The condition of the containers (new or like new, with nonmetallic, non-sparking interiors, free of protrusions, etc.);

b. The handling equipment and sequence of operations to be employed; and

c. Stowage, segregation, and firefighting.

NOTE: Shipments of Class A explosives require COTP issued loading permits.

Also, Class A and B explosives must be shipped under DOT regulations rather than IMO classification, even when they are shipped for export. See Paragraph E.4 of this Chapter for more information relating to import shipments.

2. Military Explosives

a. General requirements. Marine shipment of military explosives is regulated under 46 CFR Part 146. These regulations are closely tied to the commercial explosives regulations in 49 CFR; these regulations refer to the marking and labeling requirements of 49 CFR Part172 and the exemption procedures of 49 CFR Part 107.

(1) All shipments of military explosives, except those assigned to Coast Guard Class I (see 46 CFR 146.29-13) and those carried aboard public vessels, require loading permits from the COTP. The COTP may authorize, in writing, alternate stowage or handling methods based on equivalent safety (see 46 CFR 146.02-25(b)).

(2) Most shipments of military explosives in intermodal freight containers must be approved by Commandant (CG-ENG-5) in the same manner as are shipments of commercial explosives (see 46 CFR 146.29.11(a)(16)).

(3) All other deviations from regulatory transportation requirements must be in the form of an exemption approved by the Director, OHMT, DOT (see 46 CFR 146.02-25(a)).

NOTE: Commandant (G-ENG) recognizes the problems arising from the existence of three regulatory codes applying to the transport of explosives. A rulemaking project is nearing completion which will incorporate the military explosives requirements into 49 CFR Part 176. This project will also incorporate the United Nations' scheme for classification and segregation of all for marine shipment, and should provide domestic and international harmony for all explosives.

b. Definition. Military explosives are explosive substances and devices shipped by, for, or to the following:

(1) Any department or agency of the U.S. Department of Defense; or

(2) The government of any country whose defense is deemed vital to the defense of the United States.

(a) The first of the above conditions is self-explanatory.

(b) The second refers to a shipment of munitions or other explosives for which the U.S. State Department Office of Munitions Control has issued a License for Export of Defense Articles in accordance with 22 CFR Parts 123 and 126. The State Department's policy is to deny licenses for the export of defense articles to countries or areas with respect to which the United States maintains an arms embargo, or "whenever an export would not otherwise be in furtherance of world peace and the security and foreign policy of the United States" (22 CFR 126.1).

c. Proper shipping name. The reference in 46 CFR 146.29-14(c)(4) to "true shipping name...specified in 146.29-100," is a regulatory anachronism which will be eliminated by the rulemaking action is effective, military explosives should be identified on the Dangerous Cargo Manifest by their DOT proper shipping name. Each military explosive is assigned a proper shipping name and hazard class on the basis of an examination and tests by a laboratory recognized under 49 CFR 173.86 or 46 CFR 146.20-14, and approved by the Director, OHMT or a DOD agency authorized to approve explosives under those sections. The proper shipping name on the Dangerous Cargo Manifest should be the same as on the package and the shipping papers used to compile the manifest (46 CFR 146.05-12(a), 146.29-14(b)). Two sources for proper shipping names assigned to military explosives are the following:

(1) Hazard Classification of United States Military Explosives and Hazardous Munitions, U.S. Army Defense Ammunition Center and School, Savanna, IL 61074-9639, October 1988.

(2) Navy Transportation Safety Handbook for Ammunition, Explosives and Related Materials, NAVSEA OP2165, Vol. 2, Commander, Naval Sea Systems Command, July 1986.

d. Compliance with 49 CFR or the IMDG Code. If it is impracticable for a shipment of military explosives to comply with the handling, stowage, or segregation provisions of 46 CFR 146, the COTP may authorize alternative methods in writing (see 46 CFR 146.02-25). Compliance with the equivalent provisions of 49 CFR Part 176 or the IMDG Code is appropriate. Authorizations for alternative handling, stowage, or segregation should be limited to one ship, one time, otherwise the shipper, carrier, or agent must obtain an exemption from the DOT OHMT per 49 CFR Part 107, Subpart B. Although the COTP may authorize any alternative that provides an equivalent level of safety, it is recommended that whenever 49 CFR or the IMDG Code is authorized, complete compliance with that code should be specified.

e. Classification of military explosives. Figure F5-3 is a supplement to the Classification, Handling, and Stowage Chart in 46 CFR 146.29-100 which may be used to determine the Coast Guard stowage class of a military explosive based on its DOT proper shipping name and hazard class. It is the responsibility of the shipper to determine the DOT proper shipping name, hazard class, and Coast Guard stowage class of military explosives. In most cases, this information may be readily obtained from the DOD Joint Hazard Classification System or various DOD manuals and publications.

FIGURE F5-3:

COAST GUARD STOWAGE CLASSES OF MILITARY EXPLOSIVES

This figure serves as a link between the DOT Hazard Classification system in 49 CFR Subchapter C and the Coast Guard stowage classification system in 46 CFR 146.29. The DOT-authorized proper shipping names that apply to military explosives items are listed alphabetically. A stowage planner may use the shipping papers description to determine an item's stowage class. Each line entry contains a DOT proper shipping name, a DOT explosives class, and one or more applicable Coast Guard stowage classes. An example of an item with multiple shipping classes listed would be something like ammunition for cannon with smoke projectile, which may fall into Class II-D, II-E, or II-F, depending whether its smoke-making component is phosphorus, hexachloroethane, sulfur trioxide/chloro-sulphonic acid, or titanium tetrachloride. For entries that list more than one Coast Guard stowage class, the planner must have or obtain additional information concerning the construction or explosive composition of the particular item. When more than one stowage class is listed, the class definitions, descriptions, and examples in the chart, 46 CFR 146.29-100, should be consulted to determine the applicable stowage class.

DOT Proper Shipping Name	DOT Explosive Class	Coast Guard Stowage Class
Actuating cartridge, explosive	C	I
Ammunition, chemical, explosive with Poison A material	A	XI-A, XI-B
Ammunition, chemical, explosive with Poison B material	A	XI-A, XI-B
Ammunition, chemical, explosive with irritant material	A	XI-B
Ammunition for cannon with empty projectile	B	II-B
Ammunition for cannon with explosive projectile	A	IV
Ammunition for cannon with gas projectile	A	XI-A, XI-B
Ammunition for cannon with illuminating projectile	A	IV
Ammunition for cannon with incendiary projectile	A	IV
Ammunition for cannon with inert loaded projectile	B	II-b
Ammunition for cannon with smoke projectile	A	II-D, II-E, II-F
Ammunition for cannon with solid projectile	B	II-B
Ammunition for cannon with tear gas projectile	B	XI-B
Ammunition for small arms with explosive projectile	A	IV
Ammunition for small arms with incendiary projectile	A	IV
Black powder	A	IX-A
Black powder igniter with empty cartridge bag	C	I
Booster, explosive	A	VIII, X-A
Burster, explosive	C	X-A
Cannon primer	C	I, III
Cartridge bags, empty with black powder igniter	C	I
Cartridge, practice ammunition	C	I, II-B, II-C
Chemical ammunition, non-explosive (See NOTE A)	Irritant	XI-B

DOT Proper Shipping Name	DOT Explosive Class	Coast Guard Stowage Class
Chemical ammunition, non-explosive	Poison A	XI-A, XI-B
Chemical ammunition, non-explosive	Poison B	XI-A, XI-B
Combination fuse	C	III
Combination primer	C	I, III
Cord, detonating	A	I, VIII
Cord, detonating (See NOTE B)	C	I
Delay electric igniter	C	II-C
Detonating fuse, Class A explosive	A	VI, VIII
Detonating fuse, Class C explosive	C	I, III
Detonating primers, Class A explosive	A	VIII
Detonating primers, Class C explosive	C	III
Detonators, Class A explosive (See NOTE C)	A	VIII
Detonators Class C explosive	C	VIII
Electric squib	C	II-C
Empty cartridge bag with black powder igniter	C	I
Empty cartridge case, primed	C	I
Explosive bomb	A	II-E, II-G, II-J, VIII, X-A, X-B, XI-A, XI-B
Explosive cable cutter	C	I
Explosive mine	A	IV, VII, X-A, X-B, XI-A, XI-B
Explosive power device, Class B	B	II-B
Explosive power device, Class C	C	I
Explosive projectile (See NOTE D)	A	II-D, V, VII, X-A, X-B, XI-A, XI-B
Explosive release device	C	I
Explosive rivet	C	I
Explosive torpedo	A	X-A, X-B
Fireworks, common	C	II-C
Fireworks, special	B	II-B, II-C, II-D, II-E, II-G, II-J
Flexible linear shaped charge, metal clad	C	VIII
Fuse igniter	C	II-C
Fuse, instantaneous	C	II-C
Fuse lighter	C	I, II-C
Fuse mild detonating, metal-clad	C	III
Fuse safety	C	I
Fuze, combination	C	III

DOT Proper Shipping Name	DOT Explosive Class	Coast Guard Stowage Class
Fuze, detonating	A	VI, VIII
Fuze, detonating, Class C explosive	C	I
Fuze, detonating, radioactive	A	VI, VIII
Fuze, percussion	C	I, III, VIII
Fuze, time	C	I, III, VIII
Fuze, tracer	C	III
Grenade, empty primed	C	I
Grenade, hand or rifle, explosive	A	II-J, IV
Grenade, tear gas (See NOTE A)	Irritant	XI-B
Grenade (with incendiary material)	B	II-J
Grenade (with Poison A material)	Poison A	XI-A, XI-B
Grenade (with Poison B material)	Poison B	II-D, II-E, II-F
Grenade (with smoke charge)	C	II-D, II-E, II-F
Hand signal device	C	II-C
High explosive	A	IX-A, IX-B
High explosive liquid	A	IX-A, IX-B
Igniter	C	I, II-C, II-D, II-J
Igniter cord	C	I
Igniter, fuse, metal-clad	C	III
Igniter, jet thrust (JATO)	A	IX-A
Igniter, jet thrust (JATO)	B	III
Igniter, rocket motor	A	IX-A
Igniter, rocket motor	B	III
Initiating explosive	A	IX-C
Jet thrust unit	A	X-C
Jet thrust unit	B	II-B
Low explosive	A	IX-A
Percussion cap	C	I, III, VIII
Percussion fuze	C	I, III, VIII
Propellant explosive	A	II-A, IX-A
Propellant explosive in water	B	IX-A
Propellant explosive in water, unstable condemned, or deteriorated (See NOTE E)	B	IX-A
Propellant explosive, liquid	B	IX-A
Propellant explosive, solid	B	II-A, IX-A
Rocket ammunition with empty, inert or solid loaded projectile	A	II-B
Rocket ammunition with empty projectile	B	II-B
Rocket ammunition with explosive projectile	A	IV, X-C, X-D

DOT Proper Shipping Name	DOT Explosive Class	Coast Guard Stowage Class
Rocket ammunition with gas projectile	A	XI-A, XI-B
Rocket ammunition with illuminating projectile	A	IV
Rocket ammunition with incendiary projectile	A	IV
Rocket ammunition with inert loaded projectile	B	II-B
Rocket ammunition with smoke projectile	A	II-D, II-F
Rocket ammunition with solid projectile	B	I-B
Rocket engine, liquid	B	II-B, X-E
Rocket head	A	II-D, VII, X-A, X-B, XI-A, XI-B
Rocket motor	A	X-C
Rocket motor	B	II-C
Safety fuse	C	I
Safety squib	C	II-C
Signal flare	C	II-C
Small-arms ammunition	C	I
Small-arms ammunition (for personal care or household use) (See NOTE F)	ORM-D	I
Small-arms ammunition, irritating cartridge	C	I
Small-arms primer	C	I
Smoke candle	C	II-C, II-D, II-E, II-F
Smokeless powder for small-arms	Flam. Sld.	IX-A
Smoke pot	C	II-C, II-E
Smoke signal	C	II-C
Starter cartridge	B	II-A
Starter cartridge	C	I, II-C
Supplementary charge (explosive)	A	IX-B
Torpedo, railway	B	II-C
Tracer	C	II-C
Tracer fuze	C	III

DOT Proper Shipping Name	DOT Explosive Class	Coast Guard Stowage Class

NOTES:

A. The hazard class formerly identified as "Poison C" is now "Irritating Material."
B. Replaces former description "Cordeau detonant."
C. Replaces former descriptions "Blasting caps," "Blasting caps with safety fuse," and Electric blasting caps."
D. The DOD publications from which Figure 29-3 was compiled list no DOD ammunition items in Coast Guard Stowage Class V. However, such items may exist. If a DOD agency ships explosive projectiles containing "Explosive D" (ammonium picrate), CG Class V may be used.
E. The hazard of propellant explosive (smokeless powder) in water, even when unstable, condemned, or deteriorated is flammability, not mass detonation. Therefore, its DOT hazard class is Class B explosive.
F. Small arms ammunition, DOT Class C explosive, in the forms, quantities, and packagings specified in 49 CFR 173.1201, may be reclassified as "Consumer Commodity" (DOT Class ORM-D). Although no known DOD ammunition item is classed as ORM-D, it is possible that small arms ammunition so classed might be shipped on board a vessel with military explosives. When is the case, Coast Guard Class I applies for stowage purposes.

3. Commandant Approvals for Shipment of Explosives

The following information concerns requirements for explosives, including approvals issued by Commandant (CG-ENG) for equipment used in handling and transporting military and Class A explosives.

a. The shipment of explosives by cargo vessel is regulated by 46 CFR Part 146 (military explosives) and 49 CFR 171-179 (all other types of explosives). The following provisions of these regulations authorize Commandant (CG-ENG) to approve certain equipment used in handling or transporting military and Class A explosives:

(1) 46 CFR 146.29-42 and 49 CFR 176.76(a): Authorizes Commandant (CG-MTH) to approve transport vehicles and freight containers for the transportation of military and Class A explosives.

(2) 49 CFR 176.78(d): Prohibits use of power-operated industrial trucks in holds and compartments containing explosives, unless approved by Commandant (CG-522).

(3) 49 CFR 176.150(b): Authorizes Commandant (CG-ENG) to approve the construction, handling, and stowage of portable magazines with capacity exceeding 110 cubic feet.

b. To implement the above regulations, Commandant (CG-ENG) issues a Commandant Coast Guard Approval (CGA), an approval that may be issued to a shipper, a carrier, or, for an import shipment, a consignee.

(1) A person whose shipment of explosives would be affected by any of the above regulations should apply in writing or by Telex to Commandant (CG-MTH), U.S. Coast Guard, Washington, DC 20593-0001 (Telex No. 892427) for an approval.

(2) A shipper should have a valid CGA in hand when applying for a permit to handle designated dangerous cargo, i.e., military or Class A explosives, under 33 CFR 126.17 and 49 CFR 176.100.

(3) Figures F5-4 and F5-5 provide a sample CGA and a list of CGAs that are currently in effect.

c. CGAs issued since 1983 for the transportation of military or Class A explosives in freight containers and portable magazines have an open-ended expiration provision. Most other CGAs expire 2 years after their date of issue. The person or organization in whose name a CGA is issued may not transfer that CGA to another person or organization. If a company changes its name, address, or corporate affiliation, it must apply for a new or amended CGA.

d. OCMIs and COTPs should ensure that shippers, carriers, and others responsible for shipments of explosives are aware of the requirements concerning CGAs, and when a CGA is required, that the shipment is made in accordance with its terms.

FIGURE F5-4: SAMPLE COMMANDANT COAST GUARD APPROVAL NUMBER 012-85

In accordance with Title 49 Code of Federal Regulations, Subpart 176.76, and Title 46 Code of Federal Regulations, Subsection 146.29-11(c)(16), approval is hereby granted to Ewing Energy Corporation, 10000 Main Street, Dallas, TX 75240, for the shipment of Class A and military explosives in freight containers subject to the following conditions:

1. VESSELS: "Containership" or "Trailership" as defined in 49 CFR 171.8, or any "Cargo Vessel" as defined in 49 CFR 171.8 which has been specifically modified for the carriage of freight containers or can accommodate on deck stowage thereof.

2. PORTS: Any "Designated Waterfront Facility" as specified in 33 CFR 126.05(a), for which the captain of the port has issued the permit required in 33 CFR 126.17.

3. CONTAINERS: "Freight containers," as defined in 49 CFR 171.8, must meet the following physical requirements as determined by visual inspection. For a shipment entering the United States from a foreign country, Ewing Energy Corporation or their authorized agent must provide the captain of the port with a written certification that the containers meet these requirements.

   a. Only closed freight containers may be used for the carriage of Class A and military explosives under the terms of this approval. Closed freight containers are defined as containers which totally enclose the contents by permanent structures. An open freight container which is covered by a tarpaulin or similar fabric or plastic cover is not considered a closed freight container.

   b. Freight containers shall be clean enough, inside and out, to permit detailed inspection and ensure freedom from any residue of previous cargoes.

   c. Freight containers shall be structurally sound and weathertight. Major defects in the main structural members that affect the structural integrity of the freight container are unacceptable. Main structural members consist of top and bottom

side rails, top and bottom end rails, door sill and headers, corner posts, corner fittings, and floor crossmembers. Major defects are defined as holes, tears, fractures, or cracked or suspect welds. Dents or bends in a surface of main structural members exceeding 0.75 inch (19mm) in depth, regardless of length, are unacceptable. More than two splices per bottom or top side rail, more than one splice in the top or bottom end rail or door header, and any splice in the door sill or corner posts are unacceptable. Butt-welded, inset splices are the only acceptable repairs when splicing is permitted in main structural members. Dimensional distortion that does not permit proper engagement of lifting or tie-down devices is unacceptable.

d. There shall be no wastage of metal (or signs of wastage that may have been covered with paint or otherwise concealed) in any structural component. Deterioration in any component of a freight container, whether of ferrous or nonferrous material construction, such as rusted-out metal in sidewalls or disintegrated fiberglass, is unacceptable. Normal wear, including oxidation (rust), and minor damage that does not affect the structural integrity or weathertightness of the freight container are acceptable. Lap-welded or buck-riveted patches in the walls, roof, floor, and doors are acceptable if neatly made and weathertight and not affecting the structural integrity of the container.

e. Each container must bear, in addition to a manufacturer's data plate, a CSC Safety Approval Plate; or, if in transportation between points within the United States as defined in 49 CFR 171.8, a decal or other certification showing that the container was built to, and met the requirements of, the International Convention for Safe Containers or the rules of a recognized classification society. These organizations are: American Bureau of Shipping; Germanischer Lloyd; Registro Italiano Navale; Nippon Kaiji Kyokai; Lloyd's Register of Industrial Services; Bureau Veritas; Det Norske Veritas; Register of Shipping of the USSR; and Polish Register of Shipping. A certification by a recognized inspection organization that is not listed here may also be acceptable and may be verified by Commandant (CG-MTH-1), U.S. Coast Guard, phone 202-267-1577.

f. The interior of the container shall be a nonmetallic surface free of protrusions and nonsparking in nature. Floors shall be wood or wood-covered. Steel and aluminum containers shall be lined with a minimum of 1/4-inch plywood. Metal parts of fiberglass containers shall be covered with a minimum of 1/4-inch plywood. , All linings shall extend from the floor to the height of the lading or higher.

g. Cargo placed in each container shall be adequately blocked, braced, and secured in conformance with the requirements of 49 CFR 176.76(a)(2) and to the satisfaction of the captain of the port. [NOTE: Paragraphs 3(h) and 3(i) apply to Roll-On, Roll-Off service only.]

h. Each container used for the carriage of explosives in Roll-On, Roll-Off service shall be permanently attached to a chassis (i.e., a trailer vehicle) or secured to a container chassis specifically designed to accommodate freight containers. Freight containers on flat bed trailers are prohibited.

i. Closed van trailers manufactured and tested in accordance with Association of American Railroads (AAR) Specification No. M-931, and meeting the structural requirements contained in Paragraph 3, excluding Subparagraph 3(e), are authorized for the carriage of explosives and do not require a CSC Safety Approval Plate or a classification society decal.

4. INSPECTION:

a. For a shipment originating in the United States, the captain of the port or an authorized representative may inspect the loaded containers before they are placed on the vessel. Containers which exhibit defects or damage to any of the structural, supporting, or lifting components, or containers in which the lading is not properly secured, will not be permitted on board the vessel.

b. For a shipment entering the United States from a foreign nation, the captain of the port or an authorized representative may inspect the loaded containers before they are unloaded from the vessel. Containers which exhibit defects or damage to any of the structural, supporting, or lifting components, or containers in which the lading is not properly secured, may be prohibited from removal from the vessel.

5. CARGO GEAR: Except in the case of an emergency, cargo gear which is used to load, off-load, or handle freight containers of explosives is limited to cargo gear which has been specifically designed or modified for the handling of freight containers. The Safe Working Load of the cargo gear shall be verified by a valid certificate issued by a recognized testing or regulatory agency. The Safe Working Load must be equivalent to or greater than the weight of the heaviest explosives-laden freight container to be transferred by such gear. Prior to the handling of any freight container loaded with explosives using ship's equipment, the master of the vessel or an authorized representative, or the Officer in Charge of a Coast Guard Explosives Loading Detail, if assigned, shall inspect the cargo gear to ensure that it is in safe working condition. In the case where shore-based equipment is used, the Terminal Operator or an authorized representative, or the Coast Guard Officer in Charge shall conduct the inspection to ensure that the cargo gear is in safe working

condition. In the event that a valid certificate indicating the Safe Working Load for cargo gear is not available, or if any discrepancies are discovered in the inspection of the cargo gear, it must be dynamically tested with an inert proof load equivalent to at least 150 percent of the weight of the heaviest container to be transferred. In no case shall this 150 percent proof load exceed the weight of the proof load used in the prior certification of the cargo gear.

6. HANDLING: The handling of the containers of explosives during either loading or unloading operations must be scheduled such that the containers are moved in and out of the port area as quickly as possible. Storage of containers of explosives in the port area is not permitted except as specifically authorized by the captain of the port and the local port authority.

7. STOWAGE/SEGREGATION:

   a. On containerships, containers of explosives may be stowed and secured "on deck" or "under deck away from heat" as defined in 49 CFR 176.63. When below deck stowage is utilized, the containers must be the last cargo to be stowed under the deck, and the hatches must be closed immediately after stowage is completed and before continuing loading of containers in other hatches or on deck.

   b. On cargo vessels which are not containerships, containers of explosives must be stowed and secured "on deck" only, except that these containers may be stowed below deck, away from heat, in holds only which have been modified specifically for the carriage of containers in cellular guides or the equivalent. Stowage in other than cellular guides shall be to the satisfaction of the captain of the port.

   c. On trailerships, "on deck" stowage may be in accordance with 49 CFR 176.76(e). Container chassis units must be secured to structural portions of the body of the vessel to the satisfaction of the captain of the port. Tiedowns and lashings to the units will be made to proper fittings provided on the units.

   d. The on deck stowage locations for any vessel described above must be such that the containers of explosives are protected from boarding seas by ship's structures, other containers, or artificial barriers, to the greatest extent possible.

   e. The segregation requirements of 49 CFR 176 apply to shipments by vessel. If the commodities being shipped require segregation, the separation shall be equal to or greater than the requirements for "separated from" segregation defined in 49 CFR 176.83. Containers shall be effectively secured to prevent movement during the voyage.

8. FIREFIGHTING/EMERGENCY ACTION: Firefighting equipment capable of reaching and piercing the containers loaded with explosives must be readily accessible to each container during unloading operations. Fire hoses shall be laid out and charged during handling operations.

9. REPORTING REQUIREMENTS: Any incident occurring while shipping Class A and military explosives under the terms of this approval shall be reported in accordance with 49 CFR 171.16. In addition, a copy shall be immediately forwarded to the Commandant (G-ENG), U.S. Coast Guard, Washington, DC 20593-7581.

10. In addition to any special requirements prescribed herein, all applicable DOT Regulations, 49 CFR 171-179, apply to shipments of Class A and military explosives in freight containers or transport vehicles.

11. A copy of this approval must be on board each vessel transporting Class A and military explosives under the provisions of this approval.

12. EXPIRATION DATE: This approval remains in effect unless withdrawn, superseded by a revised approval, or the regulations are amended to cover the provisions of this approval.

AUTHORIZED BY:

A. B. CEE / Date
Commander, U.S. Coast Guard
Chief, Hazardous Materials Branch
Marine Technical and Hazardous Materials Division
By direction of the Commandant

FIGURE F5-5: COMMANDANT COAST GUARD APPROVAL (CGA) IN EFFECT 01APR89

CGA #	COMPANY	*	CGA #	COMPANY	*
003-80, Rev. 1	Nissho Iwai American Corp.	2	004-80, Rev. 3	Petty-Ray Div., Geosource, Inc.	2
002-81, Rev. 1	Zim Container Service.	1	006-81, Rev. 1	Olin Corp.	1
007-81, Rev. 2	Alaska Explosives Ltd.	1	013-81, Rev. 1	Government of Portugal	1
014-81, Rev. 1	Kerr Steamship Co.	1	018-81, Rev. 2	Schlumberge r Well Services	1
019-81, Rev. 2	Dept. of Defense	1	020-81, Rev. 2	Atlas Powder International Ltd.	1
004-82, Rev. 1	Norton Lilly and Co.	1	005-82, Rev. 1	Atlas Powder Co.	1
008-82	Matson Agencies, Inc.	1	011-82, Rev. 1	Pacific Powder Co.	1
012-82, Rev. 1	Barber Steamship Lines	1	018-82, Rev. 1	Baker Sand Control	1
020-82, Rev. 2	Pacific Powder Co.	2	003-83, Rev. 2	U.S. International Mgt & Mktg	1
004-83, Rev. 1	Goex, Inc.	1	006-83, Rev. 1	Ensign Bickford	1
010-83, Rev. 1	Hercules, Inc.	1	011-83, Rev. 1	German Military Representati ve	1
013-83	Coonies Explosives, Inc.	1	014-83	Action Manufacturin g Co.	1
015-83	Expro Chemical Products	1	001-84	Pengo International	1
002-84	Austin Powder	1	004-84	Gearhart Industries	1
005-84	Alaska Explosives	2	006-84	Koek Freight Co.	1

CGA #	COMPANY	*	CGA #	COMPANY	*
007-84	Berg Boat Co.	1	008-84	E. I. Du Pont de Nemours & Co.	1
009-84	ASCA Marine Inc.	1	010-84, Rev. 1	Nat'l Shipping Lines of Saudi Arabia	1
011-84	Petro – Systems, Inc.	1	012-84	N.L. McCullough Industries	1
013-84	Pakistan National Shipping Corp.	1	001-85	Sherwood International Corp.	1
002-85	Accurate International	1	003-85, Rev. 1	Transatlantic a Agency USA	1
004-85	Braintree Companies	3	005-85, Rev. 1	Nedlloyd Lines	1
006-85	Pacific Powder Co.	4	007-85	Jet Research Center, Inc.	1
008-85	Southwest Explosives	1	001-86	Satin Air Freight	1
002-86	Israel Military Industries	1	003-86	Southwest Explosives	2
004-86	Thermex Energey Corp.	1	005-86	Lykes Bros. Steamship Co.	1
006-86	Government Supply Co.	1	007-86	Farrell Lines	1
008-86	Phillips-Parr, Inc.	1	009-86	Ireco, Inc.	1
010-86	Puerto Rico Marine Management	1	011-86	Mitsui O.S.K. Lines	1
012-86	Scol Shipping (N.A.)	1	001-87	Beaufort Shipping, Inc.	1
002-87	MacDonnel-Douglas Aerospace	1	003-87	Ridgeway International, Ltd.	1
004-87	C.C.C. Georgia, Inc.	1	005-87	ETI Explosive Technologies Int'l	3

CGA #	COMPANY	*	CGA #	COMPANY	*
006-87	ETI Explosive Technologies Int'l	2	007-87	ETI Explosive Technologies Int'l	1
008-87	Texas Instruments, Inc.	1	009-87	M. L. Marketing Company	1
010-87	Navigest, Inc.	1	011-87	Embassy of Australia	1
012-87	Trojan Corporation	1	013-87	Johns Hopkins University	1
014-87	Empremar Line	1	001-88	Alaska Explosives, Ltd.	4
002-88	Solar Int'l Shipping Agency	1	003-88	LTV Missiles and Electronics	1
004-88	Atlas Powder Co.	4	005-88	Hardrock Construction Co.	1
006-88	Woods Hole Oceanographic Institute	2	007-88	Western Atlas International	1
008-88	Marine Specialty, Inc.	1	009-88	Pan Oceans, Inc.	1
010-88	Alaska Explosives, Ltd.	1	011-88	Demex International, Ltd.	1
012-88	Marine Specialty, Inc.	2	013-88	Raytheon Company	1
014-88	Dock Express Contractors, Inc.	1	015-88	Kintetsu Intermodal (U.S.A.)	1
016-88	Loral Hycor, Inc.	1	017-88	Fire Art Corporation	1
018-88	Western State Energy Co.	1	019-88	Zai Chem, Inc.	1
001-89	Hogg Robinson (G.F.A.), Ltd.	1	002-89	Naval Weapons Sta, Concord, CA	3

CGA #	COMPANY	*	CGA #	COMPANY	*
003-89	Old Dominion Stevedoring Corp.	3	004-89	Guiberson Div., Dresser Industries, Inc.	1
005-89	Royal Ordnance, plc.	1	006-89	Otter Creek Chemical Corp.	1

*NOTES:
1. Freight container for military or Class A explosives
2. Oversize portable magazine
3. Industrial truck for use in explosives hold
4. Class A explosives in rail freight car

4. Import Shipments of Explosives

Import shipments of military, Class A, and Class B explosives must be in complete compliance with the applicable provisions of 46 and 49 CFR. The option of complying with the IMDG Code does not extend to these shipments. An import shipment of military or Class A explosives in a freight container or oversize portable magazine must be in compliance with a CGA issued by Commandant (CG-ENG).

---

5. Testing and Approval of Explosives ("EX" Numbers)

Every non-military explosive transported within the United States must have been tested and approved in accordance with 49 CFR 173.86 or 171.19. Military explosives must have been tested and approved in accordance with 46 CFR 146.20-13. If a COTP has any doubt about the proper shipping name or hazard classification of an explosives shipment, the shipper may be requested to provide documentation of the approval. Approvals issued by the DOT's OHMT are identified by a seven digit number prefixed by the letters "EX." Approvals issued by other agencies have been grandfathered and remain valid. Figure F5-6 provides a sample OHMT explosives classification approval letter. COTPs should ensure that foreign shippers, importers, or their agents are aware of this requirement and have obtained a valid OHMT approval before attempting to import explosives of foreign origin.

FIGURE F5-6: SAMPLE OHMT EXPLOSIVES CLASSIFICATION APPROVAL

April 30, 1987

Mr. J. R. Ewing
Ewing Energy Corporation
10000 Main Street
Dallas, TX 75240

Dear Mr. Ewing:

Based on the documentation submitted by Ewing Energy Corporation in accordance with Sections 173.86 and 173.114a, Title 49, Code of Federal Regulations, the new explosive products listed below have been approved for shipment and are hereby classified as follows:

Reference	Product Designation	Description	Hazard Class
EX-8604670	001-3700-473	Detonators	Class A explosives
EX-8604671	001-3700-453	Detonators	Class A explosives

Only explosives and explosive devices as described in the recommending agency report are authorized.

Should you have any questions regarding these classifications, please call this office at (202) 366-4514.

Sincerely,

X. Y. Zee
Chief, Approvals Branch
Office of Hazardous Materials Transportation

6. Segregation of Containerized Explosives

49 CFR 176.83(a) prohibits the stowage of incompatible explosives in the same hold or compartment. On containerships, this prohibition may be impracticable when it is necessary to stow freight containers containing incompatible explosives. In this case, a COTP may authorize as alternative stowage "separate from" segregation in accordance with 49 CFR 176.83(d)(3)(ii)(A), which provides an equivalent level of safety.

F. SHIPS' STORES

1. Introduction

Hazardous materials used as ships' stores (i.e., other than as fuel for the main propulsion plant) are regulated under 46 CFR Part 147. The term “ships' stores” does not apply only to small containers. Some vessels have large, boxed deck tanks for such stores (e.g., a deck tank carrying nitrogen as an inert gas supply).

2. Authorization for Carriage

A hazardous material may be carried on board a vessel as a ships' store if it is labeled according to 46 CFR 147.30 and if it is not prohibited in 46 CFR Part 147, Subpart B. Certain materials, including flammable liquids not addressed in 46 CFR Part 147 Subpart B, Class A Explosives, and Class A Poisons must be approved for carriage by Commandant (CG-ENG-5). A list of materials approved under this provision may be obtained from Commandant (CG-ENG-5). Waivers of any of the carriage requirements in 46 CFR Part 147 may also be obtained from Commandant (CG-ENG-5) as detailed in 46 CFR 147.9.

G. FUMIGATION

Interim regulations for shipboard fumigation are located in 46 CFR 147A. They apply to foreign and U.S. vessels as described in 46 CFR 146.02-2.

NOTE: These regulations are under review, having been found inadequate to address unmanned barges, LASH or SEABEE type barges carried aboard ship, and intermodal freight containers.

The rules for these particular applications are contained in two special permits: SP 2-75 and SP 52-75.

Questions should be directed to Commandant (CG-ENG-5).

TABLE OF CONTENTS

A. Introduction **G1-3**

B. Scope of Exams **G1-3**
1. Flag State G1-3
2. Port State G1-4
3. Coastal State G1-4

C. Examination/Inspection Teams **G1-4**

D. Regulatory Authorities **G1-5**
1. OCSLA: 43 U.S.C. § 1331 G1-5
2. Vessels Subject to Inspection: 46 USC § 3301 G1-5
3. Classification Societies: 46 U.S.C. § 3316 G1-5

E. Interagency Agreements **G1-6**
1. OSHA and Coast Guard MOU History G1-6
2. BSEE and Coast Guard MOU/MOA History G1-6

F. Vessel Certificates of Financial Responsibility (COFRs) and Oil Spill Financial Responsibility (OSFR) **G1-8**

G. Jones Act **G1-8**

H. Personnel **G1-9**
1. Determining Which Personnel May be Employed on a Unit Engaged in an OCS Activity G1-9
2. Guidance for Processing a Determination Request G1-9

I. Post Hurricane and Natural Disaster Inspection Requirements **G1-11**
1. Fixed OCS Facilities G1-11
2. Floating Facilities and MODUs G1-11
3. Bureau of Safety and Environmental Enforcement (BSEE) G1-12

J. Confined Space Entry **G1-12**
1. Regulations G1-12
2. Marine Chemist Availability for Overseas Inspections G1-13

K. Portable Accommodation Modules **G1-14**
1. Plan Review G1-14
2. OCMI Inspection Standards G1-14
3. MISLE Data Entry G1-15

L. MISLE Casework Documentation G1-15

M. Processing of Violation Cases G1-15

N. Pollution Prevention G1-15
1. MARPOL Requirements G1-16
2. Oil Record Books (ORB)/Oily Water Separators (OWS) and the International Oil Pollution Prevention Certificate (IOPP) G1-16
3. MARPOL Annex V G1-17

O. Training with the Bureau of Safety and Environmental Enforcement G1-20

A. INTRODUCTION

This chapter consists of policies that implement the regulation of offshore activities on the U.S. Outer Continental Shelf (OCS) and the inspection of U.S. and foreign flagged units operating in the mineral and oil industry both in U.S. and foreign waters, to include vessels, MODUs, floating and fixed offshore facilities/platforms falling under Coast Guard jurisdiction.

In accordance with the Outer Continental Shelf Lands Act (OCSLA), 43 U.S.C. § 1331 et. seq., and numerous Memorandum of Understanding and Agreement with the Bureau of Safety and Environmental Enforcement (BSEE) and the Occupational Safety and Health Administration (OSHA), the Coast Guard promulgates and enforces safety and security regulations governing units, including vessels, facilities, fixed and floating production platforms, and Mobile Offshore Drilling Units (MODUs) when operating on the U.S. OCS.

With regard to MODUs specifically, the Coast Guard is responsible for the inspection of the MODUs hull structure, electrical system safety, lifesaving and fire fighting systems and equipment, and for verifying the unit's crew is capable of conducting satisfactory abandon ship (unit) and fire drills. BSEE is responsible for the inspection and testing of the production and drilling systems and production operations of the MODU from the unit's drill floor to the subsea well.

Foreign floating production units and MODUs may not conduct OCS activities on the U.S. OCS without a valid Coast Guard Certificate of Compliance (COC). In order to maintain a valid COC these units must undergo a Coast Guard examination annually. Additionally, each foreign vessel involved in OCS activities would also be subject to Port State Control authorities if the vessel enters within 12 nautical miles of the U.S. coast line.

B. SCOPE OF EXAMS

There are three basic regulatory authorities the Coast Guard uses to regulate MODUs and other units operating on the OCS: flag state, port state, and coastal state authority.

1. Flag State

a. The Coast Guard serves as the flag state for U.S. flagged units. Marine Inspectors (MIs) conduct inspections verifying the units meet domestic requirements and issue certificates attesting to the unit's compliance with these standards. Additionally, for U.S. MODUs operating internationally and meeting the standards of the International Maritime Organization Code for the Construction and Equipment of MODUs (IMO MODU Code), the an authorized classification society acting on behalf of the U.S. Coast Guard issues the IMO MODU Code Safety Certificate.

b. A flag state inspection is an in depth inspection based on U.S. rules and regulations. These inspections include extensive testing of systems and issuance of certificates.

---

2. Port State

a. The Port State Control (PSC) program was initiated to remove substandard ships from U.S. waters which extend to 12 nautical miles (NM) offshore. More detailed information on Coast Guard examinations conducted under the port state control authority can be found in MSM Vol II, Section D: Port State Control. Because MODUs seldom operate within the 12 NM range; however, they typically fall under "coastal state" authority.

b. The scope of an exam performed under port state control authority on a foreign entity is more limited than one performed on a U.S. or undocumented entity. This limited scope is based on units having on board valid international documents issued by or on behalf of its flag state.

---

3. Coastal State

a. In accordance with the 2009 IMO MODU Code, the coastal state is defined as the government of the state exercising administrative control over the drilling operations of the unit. OCSLA gives the Coast Guard the jurisdiction as the coastal state over the "subsoil and seabed of the OCS appertain to the United States." This is the authority most often exercised by the Coast Guard over foreign flagged MODUs.

b. In accordance with 33 CFR 140.101(e) the Coast Guard will recognize and accept valid international certificates issued by signatories to international instruments and will verify compliance by spot checking compliance of any accepted certificate. Depending on the conditions found on an OCS unit, these coastal state examinations may be more in depth than a traditional PSC examination, but will not be as stringent as flag state inspections.

c. The U.S. as a coastal state allows for three inspection options for foreign flagged MODUs entering the OCS to conduct OCS activities. These options, a, b, and c are further discussed in Section G, Chapter 2 of this Manual.

C. EXAMINATION/INSPECTION TEAMS

Offshore teams should, at a minimum, contain two members for routine examinations/ inspections. One member must be a MODU Inspector certified with the appropriate competency

(qualification). The second member should be certified as a Port State Control Examiner (PSCE). When deciding the size of the team necessary (including trainees) to perform an examination/inspection, the Marine Inspector should consider the type of exam and unit particulars (type, size, location offshore, transportation acquired, etc). Deviations may be authorized at the discretion of the OCMI when determining the number and qualification level of the marine inspectors conducting the examination/inspection.

In some instances, a National Center of Expertise member, Coast Guard travelling inspector, auditor, or other technical expert may be participating in an exam/inspection. These additional participants do not count towards the size of the team.

D. REGULATORY AUTHORITIES

1. OCSLA: 43 U.S.C. § 1331

The Outer Continental Shelf Lands Act (OCSLA) (43 U.S.C. § 1333(d)(1) et seq.**)** gives the Coast Guard jurisdiction over the subsoil and seabed of the OCS appertain to the United States and waters adjacent to including vessels engaged in OCS activities.

More specifically, 43 U.S.C. § 1333(d) (1), authorizes the Coast Guard to create and enforce regulations to ensure safety of life and property on the OCS.

2. Vessels subject to inspection: 46 U.S.C. § 3301

This statute requires that seagoing motor vessels be inspected by the Coast Guard. These vessels must meet the requirements of 46 CFR Subchapter I-A and/or 33 CFR Subchapter N when working on the U.S. OCS.

3. Classification societies: 46 U.S.C. § 3316

The Coast Guard may accept certain flag State statutory certificates issued to U.S. flagged vessels by authorized classification societies or recognized organizations (ROs), such as the American Bureau of Shipping (ABS). The Coast Guard retains the responsibility for issuing the Certificate of Inspection (COI); however, a RO may participate in the plan review and inspections necessary for issuance of this certificate. Title 46 CFR Part 8 provides detailed regulations for the Alternate Compliance Program (ACP). See this Manual, Section G, Chapter 2, for additional information.

E. INTERAGENCY AGREEMENTS

1. OSHA and Coast Guard MOU History

a. On 19 December 1979, the Coast Guard and Occupational Safety and Health Administration (OSHA) signed an MOU that gave the agencies joint responsibility for the occupational safety and health of personnel on OCS facilities. The purpose of this MOU was to establish procedures to increase consultation and coordination between the Coast Guard and OSHA with respect to matters affecting the occupational safety and health of personnel working on the OCS of the United States. The two agencies agreed to observe the following procedures in carrying out their responsibilities regarding development and promulgation of standards and enforcement of regulations and standards.

b. In 1983, the two agencies entered into a second MOU that defined the responsibilities of each agency with respect to Coast Guard certificated vessels. The 1983 MOU outlined the statutory authorities of each agency to prescribe and enforce standards or regulations affecting the occupational safety and health of seamen aboard vessels, including MODUs that are inspected and certificated by the Coast Guard.

The 1983 MOU also clarifies the Coast Guard will enforce the Occupational Safety and Health Act with respect to the working conditions of seamen aboard inspected vessels. However, OSHA retained the authority over discrimination cases on inspected vessels.

A foreign MODU operating under the authority of a COC issued by the Coast Guard is considered "an inspected and certificated vessel" for the purposes of the 1983 MOU with OSHA.

c. The Coast Guard has primary authority for OCS worker safety; however, OSHA is available to assist in areas of their expertise.

2. BSEE and Coast Guard MOU/MOA History

a. A Memorandum of Understanding (MOU) was signed November 27, 2012 between the Director of the BSEE and the Deputy Commandant for Operations (DCO) of the United States Coast Guard. The purpose of the MOU is to promote interagency consistency in the regulation of OCS activities, facilities and units under the respective jurisdiction of the BSEE and Coast Guard, minimize duplication of effort and aid participating agencies in the successful completion of their assigned missions and responsibilities. The goal is to promote safety of life and property and the protection of the environment. On 1 October 2011, the Bureau of Ocean Energy

Management, Regulation and Enforcement (BOEMRE), formerly the Minerals Management Service (MMS), was replaced by the Bureau of Ocean Energy Management (BOEM) and the Bureau of Safety and Environmental Enforcement (BSEE) as part of a major reorganization.

b. Key regulators from the Coast Guard and BSEE headquarters meet quarterly to discuss the following objectives as it relates to the MOU:

(1) Fostering communication and cooperation between the participating agencies.

(2) Promoting compliance with applicable regulations.

(3) Optimizing use of expertise and resources, as well as coordinating efforts with respect to offshore safety and environmental protection.

(4) Developing common, compatible regulations and policies.

(5) Encouraging adoption of similar codes and standards.

(6) Providing appropriate oversight and taking effective enforcement actions.

c. To help meet the above objectives and that of the MOU, and to address lessons learned from the collection of Deepwater Horizon investigations and after-action reports, the Coast Guard and BSEE formed both a Response workgroup (charter signed in 11 January 2011) and a Prevention workgroup (charter signed 11 August 2012).

(1) The Response Workgroup's ultimate goal is to improve national oil discharge planning, preparedness, and response for facilities located seaward of the coastline through improved alignment of BSEE and Coast Guard regulatory authorities and preparedness oversight activities.

(2) The Prevention Workgroup's goal is to optimize the safety of those engaged in oil and gas exploration, development, and production on the OCS through focused interagency communications and alignment of Coast Guard and BSEE operations and activities.

d. The MOU established the framework for six Memorandums of Agreement (MOAs).

(1) OCS-01 Agency Responsibilities (effective 30 September 2004)

(2) OCS-02 Civil Penalties (effective 12 September 2006)

(3) OCS-03 Oil Discharge Planning, Preparedness, and Response (effective 03April

2012)

(4) OCS-04 Floating Offshore Facilities (effective 28 February 2008)

(5) OCS-05 Incident Investigations (effective 27 March 2009)

(6) OCS-06 Offshore Renewable Energy Installations on the OCS (effective 27 July 2011)

(7) OCS-07 Safety and Environmental Management Systems (SEMS) and Safety Management Systems (SMS) (effective 30 April 2013)

(8) OCS-08 Mobile Offshore Drilling Units (MODUs) (effective 04Jun13)

F. VESSEL CERTIFICATES OF FINANCIAL RESPONSIBILITY (COFRS) AND OIL SPILL FINANCIAL RESPONSIBILITY (OSFR)

The COFR program is managed by the Coast Guard and inspectors should be verifying that a vessel has on board the documentation required by 33 CFR 138, Subpart A. For more information on the COFR see the National Pollution Fund Center website at: http://www.uscg.mil/npfc/COFRs/. This part only applies to vessels, which includes MODU's when they meet the applicability found in 33 CFR 138.15.

Pollution liability for offshore facilities is covered under BOEM's regulations found in 30 CFR 553 - Oil Spill Financial Responsibility (OSFR) for Offshore Facilities. For more information on the OSFR see: www.boem.gov/Oil-Spill-Financial-Responsibility-OSFR/. A facility that meets the definition of a "covered offshore facility (COF)" as defined in 30 CFR 553.3 must meet the requirements of this part as applicable (30 CFR 553.10). It is important to note that MODU's may be required to meet the requirements in 33 CFR part 138 and/or 30 CFR part 553 depending on their operations.

BOEM does not issue any type of documentation nor do they require the owner/operator of COF's to maintain proof of financial responsibility on board. Their process involves an annual verification that financial responsibility remains intact. If an inspector questions whether or not a COF has OSFR coverage they may contact BOEM at 504-736-2600 for confirmation.

G. JONES ACT

The Jones Act applies only to the carriage of U.S. goods between U.S. ports. A foreign vessel can provide any service to one or more U.S. ports if that service does not include the transport, loading and offloading of U.S. merchandise. Current interpretation and application of the Jones

Act by the Customs and Border Patrol (CBP), the agency responsible for determinations on Jones Act applicability, permits both foreign and domestic vessels to engage in activity on the OCS. Although the Jones Act prohibits the transportation of merchandise by foreign vessels between coastwise places (including between the U.S. and offshore drilling facilities), the standing CBP ruling determines that OCS supply vessels move "vessel equipment" rather than transport "merchandise".

See this Manual, Section B, Chapters 1 and 4 for additional information on coastwise trade and Jones Act Status.

H. PERSONNEL

1. Determining Which Personnel May be Employed on a Unit Engaged in an OCS Activity

a. Applicability. OCSLA and its implementing regulations in 33 CFR 141 set forth the restrictions on employment of personnel on an OCS unit when that unit is engaged in an OCS Activity. The regulations apply to majority U.S.-owned units that are foreign-flagged. They may also apply to a foreign-flagged vessel that is owned or controlled by a foreign company if the Commandant determines that there is a majority U.S. interest in any company in the chain-of-ownership or control of that vessel. The regulations do not apply to U.S. documented vessels subject to the citizenship requirements of 46 U.S.C. 8103; therefore, these requests will be denied.

b. Authorization to Employ Certain Persons. In general, the regulations authorize the Coast Guard to determine the use of a foreign national by an employer on a unit engaged in an OCS Activity. Specifically, where a determination is made, it will conclude whether or not a position to be filled by a foreign national is part of the regular complement of the OCS unit. If a position is part of the regular complement, then Commandant (CG-CVC) will process the employer's request; if, however, the position is determined not to be regular complement, then the OCMI will be responsible for processing the request in accordance with H.2.d. of this chapter, below.

2. Guidance for Processing a Determination Request

In addition to the regulations, the following guidance has been published:

a. NVIC 7-84 addresses the applicability of the regulations to a) a vessel with a majority U.S. interest (either ownership or control) and b) to the employment of a foreign

national in a position determined to be part of the regular complement of the unit. These requests will be processed by Commandant (CG-CVC).

b. Commandant (CG-CVC) is responsible for processing the four classes of exemptions listed in NVIC 7-84, as these exemptions require a Coast Guard legal determination or coordination with the Department of Labor. Commandant (CG-CVC) also receives exemption requests from industry to determine whether or not personnel are considered "specialists, professionals or technically trained personnel called in to handle emergencies or other temporary operations" as defined in 33 CFR 141.15(b). 33 CFR 141.15(c) authorizes the OCMI to determine whether a particular individual or position is part of the regular complement of a unit as defined in 33 CFR 141.15(b).

c. Commandant (CG-CVC) will forward all OCS "regular complement of crew" determination request to the local OCMI for determination per 33 CFR 141.15(c). If a unit receives an exemption request that falls into any of the other classes listed in NVIC 7-84, forward it to Commandant (CG-CVC).

d. Specialists, professionals and technically trained personnel called in to handle emergencies; temporary operations; or repairs are typically NOT considered to be part of the regular crew complement of a unit. However, each request shall be handled on a case-by-case basis. Some of the factors that shall be considered when making these determinations are:

(1) job description relative to the unit;

(2) the period of time requested or anticipated;

(3) type of operations (i.e. emergency, specialized);

(4) degree of expertise or training needed; and

(5) safety considerations.

e. The following examples are provided for clarification:

(1) A commercial diver temporarily aboard a MODU or platform for emergency repairs or inspection services would NOT be considered a part of the regular crew complement of a unit. However, a commercial diver aboard a dive support vessel (DSV) would be considered a part of the regular crew complement since commercial divers are normally employed aboard DSV's.

(2) A weld inspection technician periodically aboard a pipe-lay barge to ensure quality assurance or to operate equipment that requires specialized training

would NOT be considered a part of the regular crew complement of a unit. However, a welder aboard a pipe-lay barge would be considered a part of the regular crew compliment since welders (industrial personnel) are normally employed on this type of vessel.

(3) A petroleum engineer or consultant temporarily aboard a MODU during well logging or specialized drilling operations would NOT be considered a part of the regular crew complement of a unit. However, an assistant driller or rig electrician would be considered a part of the regular crew complement of a unit since these positions are normally employed aboard this type of vessel.

f. The OCMI letter of determination on a position(s) shall be sent to the requestor with a copy to Commandant (CG-CVC-2).

I. POST HURRICANE AND NATURAL DISASTER INSPECTION REQUIREMENTS

In order to ensure offshore structures in hurricane-affected areas remain in good working order in the aftermath of a hurricane or natural disaster, BSEE and the Coast Guard have established criteria that trigger a post hurricane inspection and the degree of exam to be required. This information is applicable to all MODUs and certificated floating production facilities operating on the U.S. OCS. This does not apply to Floating Production, Storage, and Offloading (FPSO) vessels or other ship-shaped OCS facilities, including drill ships.

---

1. Fixed OCS Facilities

a. Per 33 CFR 140.101, the Department of Interior (Bureau of Safety and Environmental Management (BSEE)), may perform inspections on behalf of the Coast Guard on all fixed OCS platforms and structures engaged in OCS activities.

b. BSEE will consult with Coast Guard District Offices or the cognizant OCMI with issues regarding interpretation or application of these regulations.

c. Chapter 5 of this Section (G) provides guidance and clarifies the Coast Guard and BSEE responsibilities with respect to Fixed Platform Inspections.

---

2. Floating Facilities and MODU's

a. Floating facilities such as Semi-submersibles, Tension Leg Platforms (TLPs), Mini TLPs and SPARs, will initiate an out of cycle underwater and internal structural inspection to assess the post storm condition if that facility experienced a passing weather system that:

(1) causes an evacuation of a facility and

(2) had wave damage to topside structures.

b. 25% of underwater critical areas and 25% of internal structures must be examined within 30 days of return of a facility to operation. The areas selected for examination should give consideration to the aspect of the storm relative to the facility and/or topside damage.

c. At the discretion of the OCMI, there may be a credit for these post-storm inspections towards the next scheduled underwater hull and internal structural inspections.

d. If a weather event causes the evacuation of a facility, the inspection can be waived at the discretion of the local OCMI if the company can provide evidence that the local wave heights were not extreme as compared to normal operations.

---

3. Bureau of Safety and Environmental Enforcement (BSEE)

a. BSEE has issued a post-hurricane inspection and reporting requirements Notice to Leasees: http://www.bsee.gov/Regulations-and-Guidance/Notices-to-Lessees/2009/09-G30/.

b. Pursuant to 30 CFR 250.919(b), if any structure has been exposed to a natural occurrence such as a hurricane, tropical storm, or earthquake, the BSEE Regional Supervisor may require the facility to submit an initial report of all structural damage, followed by additional updates.

J. CONFINED SPACE ENTRY

---

1. Regulations

a. Confined space entry is discussed in Marine Safety Manual, Volume 1, Administration and Management, COMDINST M16000.6 (series), Chapter 10.

b. Confined space entry by Marine Safety personnel is covered under OSHA's regulations governing shipyard employment, specifically 29 CFR 1915, Subpart B; Confined and Enclosed Spaces and Other Dangerous Atmospheres in Shipyard Employment. The applicability of this regulation includes all shipyard employment, including vessels, vessel sections and shore side operations, regardless of location.

c. The general Coast Guard policy for entry and work by personnel in confined spaces **and** atmospheric testing requirements are found in Chapter 6 of the Safety and Environmental Health Manual, COMDTINST M5100.47 (series). See also Appendix D of MSM Vol 1 Chapter 10 for the Commandant Office of Commercial Vessel Compliance (CG-CVC) confined space entry policy questions and answers.

d. Appendix A of MSM Vol I Chapter 10 contains standard Safe Work Practices (SWPs), however, experience has shown that due to area specific or local conditions these SWP's do not necessarily cover all hazards that may be associated with specific activities. Commanding Officers have the authority to develop alternative SWP's based on local conditions. All alternative SWP's must be reviewed by a Coast Guard health and safety professional from the respective Health, Safety, Work-Life Commandant (CG-11) staff or the detached Safety and Environmental Health Officer (SEHO) located at the HSWL Service Center Field Office (HSWL SCFO) http://www.uscg.mil/hswlsc/ Any alternative SWP that is developed should also be included in the unit's written safety and occupational health program.

---

2. Marine Chemist Availability for Overseas Inspections

Overseas inspections present a unique problem, in that NFPA Marine Chemists are not always readily available to certify spaces overseas. When no Marine Chemist or other authorized person designated by the OCMI is available, the inspection should be made by the senior vessel officer present.

a. When none of the vessel's officers are present, as in the case of most vessels in foreign shipyards, the inspector must be extremely cautious. A confined space must not be entered unless it has been satisfactorily tested.

b. It is the responsibility of the owner to make his or her vessel available for inspection, and this includes ensuring safe atmospheres for internal inspections.

c. While almost all foreign yards employ persons to inspect and certify conditions in and adjacent to those spaces undergoing repair, their level of expertise varies widely. In this environment, marine inspectors must be provided the training and equipment that allow them to make independent decisions on confined space entry.

d. OCMIs should be keenly aware of the unique hazards which their inspectors face when working overseas and endeavor to ensure adequate training is afforded personnel working in this environment.

e. Local Policy. Per MSM Vol I, Chapter 10, Appendix D: When a Marine Chemist is not available, such as for overseas inspections, inspections in remote areas or inspections on small passenger vessels, fishing vessels, etc., Commanding Officers may develop local policy following the guidelines in Appendix B (of Vol I, Chapter

10) to train and designate unit personnel to perform as competent persons. The requirements of 29 CFR 1915 still apply and must be adhered to in developing local policy. The cognizant SEHO shall be consulted when developing this policy and is required to review and approve the policy before it is implemented.

K. PORTABLE ACCOMODATION MODULES

With the increased activity in the exploration and exploitation of mineral and oil resources on the Outer Continental shelf regions of the U.S., there has been an increase in the use of portable accommodation modules on vessels operating in support of these activities such as MODUs and floating OCS facilities (SPAR, TLPs, etc.). Due to the hazards associated with the offshore industry, the safety of the host vessel and the personnel on board must not be compromised by the installation and occupation of portable accommodation modules. Personnel that occupy portable accommodation modules should be afforded the same level of safety as personnel that occupy similar spaces located in permanent accommodations on board the host vessel.

A portable accommodation module is any non-integral enclosed space that is installed on a host vessel, which may be any Coast Guard inspected vessel or floating facility. They are often living quarters, medical treatment rooms, recreational spaces, toilets and washrooms, offices, or other similar spaces.

1. Plan Review

All plan review will be conducted and guidelines for the design and construction of portable accommodation modules can be obtained from the USCG Marine Safety Center. The Coast Guard does not conduct plan review of portable crew shelters for exclusive use on fixed platforms. The exception to this policy is any portable shelter installation aboard any fixed OCS facility maintaining a Coast Guard COI.

2. OCMI Inspection Standards

The OCMI should ensure portable accommodation modules are properly designed and constructed. The modules must satisfy the minimum structural, fire protection, habitability, egress, electrical, piping, fire detection, general alarm, and other safety design standards applicable to the host vessel. If a module is intended for use on board different types of host vessels, the owner of the module should design the module to meet the most stringent host vessel standards (e.g., If the host vessel is certificated under Subchapter I-A, then the portable accommodation modules onboard, must meet the standards of I-A as well. If the host vessel is certificated for standards under subchapter L and I, then the more stringent of the two standards will apply to the accommodation modules onboard.).

The OCMI should ensure portable accommodation modules are properly installed on board a host vessel before the vessel is permitted to operate and the modules are occupied. This includes the arrangement of the modules relative to other existing equipment (e.g., ventilation and hazardous areas), means of securing, suitability of the supporting deck structure, impact on the host vessel's stability, and integration with the host vessel's electrical, fire detection, general alarm system, water supply and other hotel services. In addition, OCMIs and vessel operators should be aware that the installation or removal of a portable accommodation module may have tonnage implications and the host vessel may need to be re-measured.

---

3. MISLE Data Entry

Each portable accommodation module is assigned a Coast Guard Number, and is tracked in MISLE. All documentation for approval of the portable accommodation modules, including approval letters and any plans submitted for approval, shall be included in the documentation section in MISLE, by whoever approves and reviews such written material. Similarly, all documentation for the installation of the portable accommodation modules shall be included in the documentation section of the host vessel.

A notation in the narrative of the MISLE casework is sufficient documentation that the MI inspected the unit or the installation. An example narrative entry for an installation in the MISLE Activity for the COI or COC may be:

> "The (insert CG number) portable accommodation modules on (insert vessel/unit name) were inspected on (insert date) and the installation met the host vessel inspection requirements for subchapter (insert inspection subchapter (I/I-A/N/L etc…)).

L. MISLE CASEWORK DOCUMENTATION

This section is not intended to provide a detailed instruction on how to use MISLE, as the MISLEnet (http://mislenet.osc.uscg.mil/) website provides various user guides and "how to" tutorials. See also the MISLE Data Entry Requirements for Foreign Vessel Arrivals, Examinations and Operational Controls and the MISLE Data Entry Requirements for Outer Continental Shelf (OCS) Inspections.

M. PROCESSING OF VIOLATION CASES

Violation cases must be processed in accordance with the procedures in Marine Safety Manual, Volume V, Investigations and Enforcement, COMDTINST M16000.10 (series). All suspected violations discovered during Coast Guard inspection activities or through other

means must be thoroughly investigated by the Coast Guard following the guidance in 33 CFR Subpart 1.07, 33 CFR 140.40 and USCG Marine Safety Manual Volume V, Investigations and Enforcement, COMDTINST M16000.10 (series).

N. POLLUTION PREVENTION

1. MARPOL Requirements

To clarify the MARPOL requirements for MODUs on the OCS the diagram 1 on page G1-18. A larger printable version of the MARPOL Job Aid can be found on the Commandant (CG-CVC-2) website within the Outer Continental Shelf mission on CG Homeport: https://homeport.uscg.mil.

Definitions for diagram 1 below:

Ship means a vessel of any type whatsoever operating in the marine environment and includes hydrofoil boats, air-cushioned vehicles, submersibles, floating craft and fixed or floating platforms.

Oil tanker means a ship constructed or adapted primarily to carry oil in bulk in its cargo spaces and includes combination carriers, any "NLS tankers" as defined in Annex II and any gas carrier as defined in regulation 3.20 of chapter II-1 of SOLAS 74 (as amended), when carrying a cargo or part cargo of oil in bulk.

Fixed or floating platforms including drilling rigs, floating production, storage and offloading facilities (FPSOs) used for the offshore production and storage of oil, and floating storage units (FSUs) used for the offshore storage of produced oil.

2. Oil Record Books (ORB)/Oily Water Separators (OWS) and the International Oil Pollution Prevention Certificate (IOPP)

Most offshore units have OWS onboard which must comply with the IOPP certificate. These OWS's are onboard to process deck drains related to the industrial process. If onboard strictly to process deck drains or by-products of the industrial process, the OWS may not fall under the definition of ‘Machinery Space Operations’ or the provisions associated with the same. Marine Inspectors should ensure that, like ensured during a Port State Exam, the "on deck" machinery matches the documentation provided. Larger MODUs are known to have multiple OWSs and the IOPP should denote this. Note the current IOPP Certificate Supplement has no place for additional OWS units. The Marine Inspector should indicate on the Certificate Supplement any additional OWSs onboard and their rated throughputs.

Examples: Some Semi-Sub MODUs have 4 OWS installations (one in each column) which are the same. Some other Semi-Subs have 2 OWS units (one in the center column of each side) and 1 or 2 units installed on the deck (one may process machinery space operations related fluids and the other may only process industrial process fluids). Drillships will typically have 2 OWS units (one aft and one forward, often different sized units). Jack-Ups may have OWS units installed strictly for the industrial side.

Marine Inspectors should look at the ORB entries on offshore units carefully. 550-Gal 'Tote Tanks' are used to transport oils, fuels, chemicals and wastes to/from MODUs. These are often overlooked within ORB entries. The tote is technically cargo while stored onboard. Striking oil from the tote tank into the vessel should be logged as a bunkering operation, but often it is not. Oil changes sometimes go directly to a waste oil tote tank; this should also be logged in the ORB, but often is not.

---

3. MARPOL Annex V

This Annex applies to all ships, which includes, but is not limited to MODUs, fixed and floating platforms. The discharge into the sea of *any* garbage is prohibited from fixed or floating platforms, and from all other ships when alongside *or* within 500 m of such platforms. Food waste may be discharged into the sea from fixed or floating platforms located more than *12 NM* from the nearest land and from all other ships when alongside *or* within 500 m of such platforms, but only when the wastes have been passed through a comminuter or grinder. Such comminuted or ground food waste shall be capable of passing through a screen with openings no greater than 25mm. The record keeping (garbage record book) requirement may be waived by the Administration for fixed or floating platforms while they are engaged in exploration and exploitation of the sea-bed.

The requirements for garbage pollution found in 33 CFR 151.51-151.77 apply to all U.S. registered vessels and foreign vessels while in the navigable waters of the United States or the Exclusive Economic Zone. These regulations do NOT apply to any other ship specifically excluded by MARPOL 73/78. Where U.S. regulations differ from MARPOL is the requirement to maintain a garbage record book. Per 33 CFR 151.55, all manned ocean going vessels of 400 GT and above engaged in commerce and documented under the laws of the United States and every manned fixed or floating platform subject to the jurisdiction of the United States must maintain a garbage record book.

For additional information on Annex V requirements see this Manual, Section E, Chapter 1, diagram 2 below and the 2012 IMO Guidelines for the Implementation of MARPOL Annex, V.

Diagram 1: MARPOL Annex Applicability (*Larger diagram available on HOMEPORT.*)

MARPOL Annex Applicability							
MARPOL Annex	CATEGORY	EFFECTIVE DATE	APPLICATION	COMPLIANCE	OCS Applicable	Requirements for fixed or floating platforms.	
I	Prevention of pollution by **OIL**	02-Oct-83	Applies to **all** ships	Mandatory	YES	MARPOL Annex I, Regulation 39 contains special requirements for fixed or floating platforms when engaged in the exploration, exploitation and associated offshore processing of sea-bed mineral resources. However, ships when operating on the United States Outer Continental Shelf (U.S. OCS) are subject to the jurisdiction of the United States and therefore the requirements within 33 CFR § 151.25 to maintain an ORB apply, unless the fixed or floating drilling rig or other platform is operating in compliance with a valid National Pollutant Discharge Elimination System (NPDES) permit. [See 33 CFR§151.25(m)] When a fixed or floating drilling rig or other platform departs the U.S. OCS and is not operating in the navigable waters of the United States; the ship is no longer subject to the specific requirements in 33 CFR Subchapter O, but must now comply with MARPOL Annex I.	
II	Control of pollution by **Noxious Liquid Substances (NLS)** in bulk	06-Apr-87	Applies to all ships *certified* to carry NLS in bulk, regardless of GT.	Mandatory	YES, if *certified* to carry NLS.	None.	
III	Prevention of pollution by harmful substances carried by sea in **PACKAGED** form	01-Jul-92	Applies to **all** ships. [1]	Optional [2]	Optional [2]	None.	
IV	Prevention of pollution by **SEWAGE** from ships	Not Yet Signatory	Not Applicable	Optional	Optional	As of the creation of this job aid, the U.S. is **NOT** signatory to this requirment. Applicable U.S. regulations apply: 33 CFR 151, Subchapter "O". See also NVIC 01-09 for further information.	
V	Prevention of pollution by **GARBAGE** from ships	31-Dec-88	Applies to **all** ships, regardless of tonnage.	Mandatory	YES	Reg 5: 1.) Subject to the provisions of paragrapgh 2 of this regulation, the discharge into the sea of *any* garbage is prohibited fixed or floating platforms, **and from all other ships** when alongside *or* within 500 m of such platforms. 2.) Food waste may be discharged into the sea from fixed or floating platforms located more than *12 NM* from the nearest land **and from all other ships** when alongside *or* within 500 m of such platforms, but only when the wastes have been passed through a comminuter or grinder. Such comminuted or ground food waste shall be capable of pasing through a screen with openings no gretaer than 25mm. ***Note*** : See also CVC Policy Letter 13-01 and 33 CFR 151.	Reg 10.4: (4)The Administration *may* waive the requirements for Garbage Record Books for: (.2) fixed or floating platforms.
VI	Prevention of **AIR** pollution from ships	01-Jan-10 ECA Regs: 01-Aug-12 (See CVC Policy Letter 12-04)	Applies to **all** ships. 400 GT and above & platform and drilling rigs **engaged in voyages** to waters under the sovereignty or jurisdiction of other Parties. (Except where expressly provided otherwise in regs 3, 5, 6, 13, 15, & 18.) 3: Exemptions; 5: Surveys; 6: Certificates; 13: Nitrogen Oxides (NO_x); 15: Volatile organic compounds (VOCs); and 18: Fuel oil availability and quality	Mandatory	YES, but see "Special Requirements"	Reg 3.1: Emissions from sea-bed mineral activities. Emissions directly arising from the exploration, exploitation and associated offshore processing of sea-bed mineral resources are EXEMPT from the provisions of this Annex. Such emissions include: .1) emissions resulting from the incineration of substances that are soley and directly the result of exploration, exploitation and associated offshore processing; .2) the release of gases and volitile compounds entrained in drilling fliuds and cuttings; .3) emissions associated soley and directly with the treatment, handling or strgae of sea-bed minerals; and .4) emissions from marine diesel engines that are soley dedicated to the exploration, exploitation and associated offshore processing… Reg 3.2: The requirements of regulation 18 shall not apply to the use of hydrocarbons that are produced and subsequently used on site as fuel. ***Note:*** Emissions arising from the operation of Dynamic Positioning equipment do not fall under the Regulation 3.1 exemption, whether the MODU is transiting to location or is maintaining position on location during exploration, exploitation and associate offshore processing of sea-bed mineral resources.	Reg 18.3: Fuel Oil Quality 18.3.1.1 The fuel oil shall be blends of hydrocarbons derived from petroleum refining. This shall not preclude the incorportation of small amounts of additives intended to improve some aspect of performance;

1. U.S. law accepts the International Maritime Dangerous Goods (IMDG) code as an alternative to 49 CFR, for packaging and stowage, regardless of GT.
2. Adopted by U.S. and incorporated into 49 CFR 172 and 176.

Diagram 2: MARPOL Annex V

MARPOL Annex V			
Type of Garbage	Ships outside special areas	Ships within special areas	Offshore Platforms (more than 12 NM from land) and all ships within 500 M of such platforms
Food waste comminuted or ground	**Discharge permitted** ≥ 3 NM from the nearest land, en route and as far as practicble	**Discharge permitted** ≥ 12 NM from the nearest land, en route and as far as practicble	Discharge Permitted
Food waste not comminuted or ground	**Discharge permitted** ≥ 12 NM from the nearest land, en route and as far as practicble	Discharge Prohibited	Discharge Prohibited
Cargo residues not contained in wash water	**Discharge permitted** ≥ 12 NM from the nearest land, en route and as far as practicble	Discharge Prohibited	Discharge Prohibited
Cargo residues contained in wash water		**Discharge permitted** ≥ 12 NM from the nearest land, en route and as far as practicble	Discharge Prohibited
Cleaning agents and additives contained in cargo hold wash water	Discharge Permitted	**Discharge permitted** ≥ 12 NM from the nearest land, en route and as far as practicble	Discharge Prohibited
Cleaning agents and additives in deck and extrenal surfaces wash water		Discharge Permitted	Discharge Prohibited
Carcasses of animals carried onboard as cargo and which died during the voyage	**Discharge permitted** as far from the nearest land as possible and en route	Discharge Prohibited	Discharge Prohibited
All other garbage including plastics, sythetic ropes, fishing gear, plastioc garbage bags, incinerator ashes, clinkers, cooking oil, floating dunnage, lining and packing materials, paper, rags, glass,	Discharge Prohibited	Discharge Prohibited	Discharge Prohibited
Mixed garbage	When garbage is mixed with or contaminated by other substances prohibited from dischrage or having different discharge requirments, the more stringent requirments shall apply.		

O. TRAINING WITH THE BUREAU OF SAFETY AND ENVIRONMENTAL ENFORCEMENT

The Coast Guard and the BSEE have formed a partnership to enhance interagency cross-familiarization training.

The Coast Guard is responsible for inspections of the hull structure, electrical system safety, lifesaving and fire fighting systems and equipment, and for verifying the unit's crew is capable of conducting satisfactory emergency drills on MODUs and floating OCS Facilities operating on the U.S. OCS.

BSEE regulates the sub platform drilling and production systems, exploration drilling, well work over, and well servicing operations for these OCS units, as well as for the OCS fixed platforms.

The critical interface between subsea and surface operations necessitates coordination and collaboration between the two agencies and is the thrust of this initiative.

Field commanders should prioritize engagements with their respective BSEE OCS inspection offices to increase opportunities to accompany each other on OCS inspections. Optimal interactions should consist of optimizing cross training at the BSEE training center and inspection ride alongs, as operations and funding permit. The goal is not to conduct joint inspections, but rather for each agency to have opportunities to observe one another's inspections. Participants should work to identify over-lapping inspection areas and gaps as well as build local partnerships. Over time, the coordination should evolve in ways to maximize the benefits of the partnership.

The goal of this effort is to institute an environment of increased interagency cooperation and knowledge with respect to offshore drilling and production safety as well as inspection processes.

Coast Guard-BSEE coordination at the headquarters level is ongoing and is centered on working groups focused on updating interagency agreements and cross training. Engagement and coordination at the field level will further strengthen our partnerships and increase the level of oversight on the OCS, resulting in a safer environment for maritime vessels and personnel.

TABLE OF CONTENTS

A. Existing Versus New U.S. Flag MODUs **G2-4**
1. Existing G2-4
2. New G2-4

B. Existing MODUs **G2-4**

C. New MODUs **G2-4**

D. COI Amendments **G2-5**

E. SOLAS and IMO MODU Code Procedures **G2-5**
1. SOLAS G2-5
2. Written Requests G2-6

F. Laid-Up MODUs **G2-7**
1. Notification G2-7
2. COI Status G2-7
3. Reduced Maintenance Crew, Certified MODU G2-8
4. Reduced Maintenance Crew, Surrendered or Expired COI G2-8
5. Reactivation G2-8
6. No Extensions G2-9

G. Class Society Exams **G2-9**
1. NVIC 10-82 Ch. 2 G2-9
2. Acceptance of ABS/Recognized Organization (RO) inspections G2-9

H. Reflagging and Certification of Existing Foreign MODUs **G2-10**

I. Alternate Compliance Program (ACP) **G2-10**

J. Streamlined Inspection Program (SIP) **G2-10**

K. Conversion of a Self-Elevating MODU to a Fixed Production Facility **G2-10**
1. Option 1 - Surrendered COI G2-11
2. Option 2 - Unit re-certificated under 46 CFR Subchapter I G2-12
3. Option 3 - Status unchanged G2-13

L. Conversion of a MODU to Fixed Entertainment Facility **G2-13**

M. Review of MODU Operating Manuals G2-14
1. Marine Safety Center (MSC) G2-14
2. OCMI G2-14
3. Stability Letter
G2-14
4. Operations Manual G2-15

N. Review of Emergency Evacuation Plans (EEPs) G2-15

O. Electrical Installations on MODUs G2-15

P. Navigation Lighting G2-15

Q. Acceptance of Temporary Industrial Equipment Installed on U.S. Flag MODUs Operating in Foreign Waters G2-16
1. Discussion G2-16
2. Coastal State Requirements G2-16

R. Single Voyage Load Line Authorizations G2-17
1. Applicability G2-17
2. Exceptional Circumstances G2-17

S. Lifesaving Equipment G2-19
1. Excess capacity of lifeboats G2-19
2. IMO MODU Code Compliance G2-19
3. Throw-over liferafts G2-20

T. MODU Drydocking Interval and Requests for Extension G2-20
1. Drydock Intervals G2-20
2. Extensions G2-20

U. Raw Water Towers G2-21

V. Underwater Inspection in Lieu of Drydocking (UWILD) G2-21
1. Discussion G2-21
2. Approval G2-22
3. Calibrate NDT G2-23
4. Post-inspection actions G2-23
5. Liveboating G2-24
6. Approval authority for plans G2-24
7. Internal inspection of MODU spud cans G2-24

W. Special Exam in Lieu of Drydocking (SEILOD) G2-25

X. Commercial Diving G2-25

Note: Any references to IMO MODU Code are the 1979 Code unless otherwise noted.

A. EXISTING VERSUS NEW U.S. FLAGGED MODUS

1. Existing

U.S. units built, under construction or contracted for before April 5, 1982, are considered *existing*, and are regulated to the design requirements applicable to the unit on April 4, 1982, until the unit is rebuilt.

2. New

A *new* U.S. flag MODU is one that was built, constructed, or contracted for, on or after April 5, 1982.

B. EXISTING MODUS

Existing U.S. flag MODUs are subject to the requirements of NVIC 4-78 , SOLAS 74/78, if propelled by mechanical means, and 33 CFR Subchapter N, if operating on the U.S. OCS.

NVIC 4-78, Change 1, was developed to elaborate on the grandfather provisions of MODU regulations for the then estimated 150 existing, oceangoing U.S. flag MODUs. The standard that this NVIC applied to existing units was less stringent than that applied to new units.

The NVIC did include a stipulation that certain equipment must be replaced to the standards prescribed in 46 CFR Subchapter I-A once the existing equipment is considered no longer serviceable.

The grandfather provisions of NVIC 4-78 are no longer available to any MODU seeking its initial COI.

C. NEW MODUS

New U.S. flag MODUs are inspected and certificated under the provisions of 46 CFR Subchapter I-A, SOLAS 74/78 (if propelled by mechanical means and certificated for international service), and 33 CFR Subchapter N, if operating on the U.S. OCS.

U.S. flag MODUs operating on the U.S. OCS are also required to have annual on-site inspections, in accordance with 46 CFR subpart B. Unless in a laid-up status, these vessels must maintain compliance with their COIs regardless of location or of being in the floating or bottom bearing mode.

D. COI AMENDMENTS

An amended COI may be issued to an operator at the completion of an inspection if minor items are being changed on the vessel. This includes changes to the owner or operators address or name, next or last inspection dates for hull, cargo tank internal or internal structural examinations; or next or last inspection dates for boilers, steam piping, pressure vessels, tail shaft or lifesaving equipment.

An Amended COI must be reprinted/re-issued if changes are made to the vessels manning; the vessels operating details change in MISLE; the firefighting or lifesaving equipment required onboard changes; or the cargo authority or conditions of carriage change.

An amended COI shall be re-issued after In Service Inspection Plan (ISIP) inspections, hull, cargo tank internal or internal structural exams have been completed and the next or last inspection dates have changed.

The following statement shall be included at the end of each certificate amendment:

> "This/These amendment(s) shall automatically appear on the next COI that is issued for the vessel. Please attach this form to the current COI for reference by any concerned parties."

All changes, regardless if a COI is amended or not, shall be entered into MISLE.

E. SOLAS AND IMO MODU CODE PROCEDURES

1. SOLAS

U.S. flag MODUs of 500 or more GT, propelled by mechanical means and engaged in international voyages, are subject to the requirements of SOLAS 74/78.

U.S. flag MODUs propelled by mechanical means of 500 GT or more, engaged in international voyages, will depart the U.S. with a valid COI and have all applicable SOLAS certificates, which may include an IMO MODU Code Safety Certificate.

There is a large number of MODUs not subject to SOLAS that may be eligible to receive IMO MODU Code Safety Certificates. These include jack-ups and units not propelled by mechanical means. Currently, a unit which complies with Subchapter I-A does not necessarily comply with the IMO MODU Code.

---

2. Written Request Required

Owners or operators of U.S. flag MODUs who desire an inspection for compliance with the IMO MODU Code should request this service from an authorized Classification Society. Specifics regarding authorizations can be found in 46 CFR Part 8.

a. Builders and owners of new MODUs should specify, at the time of plan review, whether or not they desire an IMO MODU Code Safety Certificate.

b. IMO MODU Code inspections are normally conducted in conjunction with inspections for certification.

c. When conflicts exist between the IMO MODU Code and the provisions of 46 CFR Subchapter I-A, the owner may request an exemption or equivalency under 46 CFR 108.105 as appropriate.

d. Written requests for exemptions and equivalencies must be forwarded to Commandant (CG-CVC) for action.

(1) The owner must provide sufficient justification in order for the request to be given consideration.

(2) OCMI should endorse all requests for exemptions or equivalencies as requested prior to submitting to Commandant.

(3) Once exemptions or equivalencies have been approved by the Commandant, the IMO will be advised in accordance with the IMO MODU Code. Exemptions must be listed on the IMO MODU Code Safety Certificate.

(4) Deviations from the IMO MODU code should be discouraged.

(5) Upon satisfactory completion of the inspection, an IMO MODU Code Safety Certificate will be issued by a Class Society authorized to do so in accordance with 46 CFR 8.320. Typically the expiration date of the MODU Code Safety Certificate will align with the expiration of the COI. When issued to a MODU, propelled by mechanical means, it is considered a substitute for the SOLAS Safety Equipment Certificate and Safety Construction Certificate.

F. LAID-UP MODUS

MODUs are often laid-up in coastal areas for extended periods of time, pending drilling contracts. The following guidelines are to be followed when a MODU is placed in laid-up status.

1. Notification

The owners of the MODU should notify the OCMI in whose zone the MODU is to be laid up. A stacking plan should be submitted and reviewed by the OCMI. As a minimum, the stacking plan should contain the following information:

a. Location.

b. Crew onboard, if any.

c. Tank levels.

d. Anchor arrangements.

e. Communications.

f. Maintenance of firefighting/lifesaving equipment.

g. Means to evacuate personnel in case of emergency.

h. Emergency response procedures.

2. COI Status

U.S. flag MODUs may be laid-up offshore or in protected waters. It is not required that an owner or operator surrender or deposit the unit's COI.

a. All units laid-up in U.S. waters must meet the lighting and sound signal requirements of 33 CFR Part 67, or, when laid-up overseas, the 72 International Regulations for Preventing Collisions at Sea (COLREGS) or rules of the Coastal state government exercising jurisdiction over the waters where the rig is to be stacked.

b. When an owner or operator advises the cognizant OCMI that a MODU is to be laid-up in U.S. waters, the COTP must determine that the unit is not obstructing any designated navigation lanes or channels.

c. Additionally, the District navigation office must be notified for the purpose of publishing a local notice to mariners.

---

3. Reduced Maintenance Crew, Certificated MODU

When a reduced maintenance crew will be aboard a certificated MODU, the OCMI may amend the COI to permit a reduction in required crew. Lifeboatmen must be provided in accordance with 46 CFR 109.323.

---

4. Reduced Maintenance Crew, Surrendered or Expired COI

a. When a reduced maintenance crew will be aboard a MODU with a surrendered or expired COI, the owner/operator must agree, in writing, to maintain the lifesaving, fire fighting, communications and other equipment determined necessary by the cognizant OCMI, to ensure the safety of personnel.

b. The owner must provide further written assurance to the OCMI that the unit will be manned with a sufficient number of persons capable of maintaining the unit in a safe condition under all circumstances, particularly if the unit is in the floating mode.

c. Failure to abide by this agreement may be subject to penalties under 46 USC§ 2302

---

5. Reactivation

Prior to placing a stacked MODU back into service, all outstanding deficiencies and worklist items should be completed to the satisfaction of the OCMI.

a. When a COI is reissued, the MODU must meet the same inspection requirements that were imposed when it was last inspected; any grandfather provisions previously afforded the MODU will remain intact. However, the MODU must meet any newly promulgated requirements applicable to existing MODUs that would have applied to the MODU had it remained in continuous service.

b. Vessels that surrendered their COIs will be required to complete an inspection for certification, including a drydocking or special underwater examination, if due.

---

6. No Extensions

When COIs are not surrendered, owners or operators should be advised that when the MODU is returned to service NO additional extensions of drydock requirements will be

granted other than what is permitted under current regulations.

G. CLASS SOCIETY EXAMS

1. NVIC 10-82 Ch. 2

NVIC 10-82 Ch.2 sets forth procedures established by a MOU between the Coast Guard and The American Bureau of Shipping (ABS). The Coast Guard will accept ABS plan review and inspection for new construction or major modifications of U.S. Flag vessels, which includes MODUs.

a. This requirement is only applicable to vessels classed by ABS. Plan review and inspections performed by ABS on behalf of the Coast Guard will replace those actions by the Coast Guard. Inspections for cause are permitted and oversight inspections shall be carried out. Inspections for cause are conducted when the OCMI becomes aware of any circumstance which indicates active Coast Guard inspection of items falling under the provisions of NVIC 10-82 is required, in the interest of safety.

b. MODUs inspected under NVIC 10-82, require internal structural exams. Spud can and mat tank internal structural examinations are some of the most hazardous activities conducted due to the decay of residual organic matter which has the potential to create oxygen deficient atmospheres and/or toxic hydrogen sulfide gases.

2. Acceptance of ABS/Recognized Organization (RO) inspections

OCMI's are also authorized to accept ABS and other recognized organization (RO) inspections of spud cans and mat tanks during special exams in lieu of drydocking (SEILOD) for independent leg and mat supported jack up mobile offshore drilling units.

a. Inspectors should continue to examine the external surface of the spud cans and mat tanks, specifically in high stress areas around leg joint connections.

b. When an external exam or class society internal inspection warrants an entry by a Coast Guard Inspector, the space shall be considered a confined space and current safety requirements by a Certified Marine Chemist shall be followed prior to entry.

H. REFLAGGING AND CERTIFICATION OF EXISTING FOREIGN MODUS

NVIC 10-81 Ch. 1 was developed to allow certain categories of existing foreign flag vessels to be brought under U.S. flag in a manner consistent with the principles and levels of safety in current Coast Guard regulations or, in some cases, to the Coast Guard standards in effect at the time of the vessel's construction.

I. ALTERNATE COMPLIANCE PROGRAM (ACP)

The Alternate Compliance Program (ACP) is a voluntary alternative process for a U. S. documented vessel to obtain a Coast Guard Certificate of Inspection (COI) by complying with the standards of an authorized classification society, International Conventions and a U.S. Supplement in lieu of the Code of Federal Regulations. It provides for vessel inspections using inspectors employed by a recognized classification society. It is also an alternative to complying with the vessel inspection regulations in Title 46 Code of Federal Regulations. It is available only to vessels capable of operating on international voyages and classed through a recognized classification society. NVIC 02-95 Ch. 2, discusses the Alternative Compliance Program which is currently available to MODUs and other types of vessels (see 46 CFR 8).

J. STREAMLINED INSPECTION PROGRAM (SIP)

The Streamlined Inspection Program (SIP) is a voluntary alternate method of inspecting documented or registered U.S. flag vessels to ensure regulatory compliance. The goal of the SIP is to keep the participants in continual compliance rather than cyclical peaks as associated with traditional annual inspections. NVIC 02-99 Part 1 and NVIC 02-99 Part 2 provide guidance on the implementation and enforcement of the SIP as promulgated in 46 CFR Part 8.

Instead of the traditional Coast Guard inspection by a marine inspector, the SIP allows onboard and shore side vessel operating personnel to conduct the majority of the inspections required by the CFR’s and to have the adequacy of these inspections verified by the Coast Guard on a regular basis (see 46 CFR part 8).

K. CONVERSION OF A SELF-ELEVATING MODU TO A FIXED PRODUCTION FACILITY

Owners of self-elevating MODUs that will be converted into production facilities may utilize one of the three options discussed below with respect to certification of the proposed unit.

In each case, the owner shall notify the cognizant OCMI, in writing, of their intention. After reviewing a proposal, the OCMI shall notify the owner of what plan review and inspection actions are necessary.

Units originally certificated under NVIC 4-78 Ch. 1 that are converted into fixed OCS facilities or are re-certificated under 46 CFR Subchapter I will not be able to retain the MODU grandfather status allowed under the NVIC.

Any systems which fall under Coast Guard jurisdiction as outlined in the Coast Guard and BSSE, Memorandum of Understanding (MOU), signed on 27 Nov 2012, will be the subject of Coast Guard review and approval (On October 1, 2011, the Bureau of Ocean Energy Management, Regulation and Enforcement (BOEMRE), formerly the Minerals Management Service (MMS), was replaced by the Bureau of Ocean Energy Management (BOEM) and the Bureau of Safety and Environmental Enforcement (BSEE) as part of a major reorganization.

Once the conversion is approved, it will be subject to the requirements of 33 CFR Parts 140-147. If the facility received a Coast Guard inspection within 6 months of the conversion, it will not have to undergo an initial inspection and the owner/operator must complete the self-inspection at the next annual inspection date.

---

1. Option 1 - Surrendered COI

A self-elevating unit that is converted into a production facility and is no longer capable of engaging in drilling, as a result of removal of all or part of its drilling equipment may be considered a fixed OCS facility by the Coast Guard.

a. Fixed OCS Facility. In order to be considered a fixed OCS facility, the unit's COI and Certificate of Documentation (COD) must be surrendered and the jacking gear must be disabled so that the unit cannot be easily lowered to the water. In addition, two of the following three items must be removed from the unit: 1.) the derrick, 2.) mud pumps, or 3.) rotary. Facilities will be subject to the requirements of 33 CFR Subchapter N pertaining to fixed OCS facilities, as appropriate.

b. Such units will not be subject to inspection as a MODU. Additionally, the facility will be subject to BSEE requirements.

c. Moving a Fixed OCS Facility. A unit that surrenders its COI may be moved after a period of time to another location without losing its status as a fixed OCS production facility. However, if the unit must be refloated in order to be moved to a new location, it must undergo an inspection by the cognizant OCMI for change of employment.

(1) Such units must comply with the 46 CFR Subchapter I inspection requirements. As part of this inspection, the unit must undergo a drydock or special underwater examination to ensure the hull is watertight and sound, unless evidence is presented of a satisfactory drydock or special exam within the past 3 years.

(2) The unit will be required to comply with the appropriate load line regulations.

(3) A Coast Guard review of the unit's plans and stability may also be required.

(4) Upon completion of a satisfactory inspection, the unit should be issued a limited or short-term certificate in accordance with 46 CFR 91.01-10(c).

(5) Upon completion of the move and once the unit is elevated on its new location, the unit will be required to disable its jacking gear to the satisfaction of the OCMI.

(6) If the OCMI determines that the normal operation of the unit will require it to be frequently refloated, then the unit will not be eligible for consideration as a fixed OCS facility. Such units will be required to remain vessels and be subject to the vessel inspection laws. If the unit changes its employment and becomes a fixed OCS facility, it cannot retain any of the grandfather status allowed in NVIC 4-78 Ch. 1, titled Inspection and Certification of Existing Mobile Offshore Drilling Units.

---

2. Option 2 - Unit Re-Certificated Under 46 CFR Subchapter I

A self-elevating unit that is converted to a production facility and is no longer capable of engaging in drilling, as a result of removal of all or part of its drilling equipment, may be re-certificated as a miscellaneous self-elevating vessel under 46 CFR Subchapter I.

This option is appropriate if the owner does not want to relinquish the vessel's COI or if the MODU requires frequent relocating, as mentioned in Option 1.

a. The unit must undergo periodic inspections as required by 46 CFR Subchapter I, including hull examinations.

b. The unit must also meet certain requirements of 46 CFR Subchapter I-A. These items include design and operation of cranes, stability, hazardous areas, lifesaving equipment, firefighting equipment, and helicopter decks.

c. Where systems serve both production and ship's service, an interface point must be identified during review to establish jurisdiction between the Coast Guard and BSEE.

d. A unit operating under this option loses its grandfather status allowed in NVIC 4-78 Ch. 1.

e. If the unit stores oil in bulk it is considered a tank vessel and must comply with 46

CFR Subchapter D, Tank Vessels, and 33 CFR Part 157, Rules for the Protection of the Marine Environment Relating to Tank Vessels Carrying Oil in Bulk.

f. When a MODU undergoes such a change, an inspection note entry must be made in MISLE identifying the date of change and whether or not the tank vessels rules apply.

---

3. Option 3 - Status Unchanged

Self-elevating units that are converted into production facilities but retain their drilling equipment on board and remain capable of engaging in drilling will remain certificated as MODUs.

a. These units are allowed to maintain their grandfather status as found in NVIC 4-78 Ch. 1.

b. Such units must continue to meet all requirements of 46 CFR Subchapter I-A.

c Some production systems on these units will also be subject to review by the Coast Guard when they are common with a ship's service system. In these systems, an interface point must be established during review in order to delineate jurisdiction.

d. As in Option 2, any unit that is used for storing oil in bulk is considered a tank vessel and must comply with 46 CFR Subchapter D, Tank Vessels and 33 CFR Part 157, Rules for the Protection of the Marine Environment Relating to Tank Vessels Carrying Oil in Bulk.

L. CONVERSION OF A MODU TO FIXED ENTERTAINMENT FACILITY

A submersible or self-elevating MODU that is converted to a fixed entertainment facility is subject to the following:

The unit will no longer be considered a vessel for the purposes of vessel inspection if it is converted in such a manner as to be incapable of being used as a means of water transportation in any manner and it is substantially permanently moored or fixed.

A converted MODU used for the purpose of entertainment will no longer be considered as engaging in the development, exploitation, exploration or production of oil or mineral resources on the U.S. OCS. Once the conversion is completed, such a unit will not be subject to the provisions of 33 CFR Subchapter N, but must continue to comply with 33 CFR Subchapter O (Pollution) and the provisions of 33 CFR Subchapter C (Aids to Navigation).

Any floating dock intended to be used as a boarding platform for the facility will be considered a

permanently moored vessel, not subject to vessel inspection laws, provided it is substantially moored such that it cannot be moved without special effort. Specifications and detailed drawings of the floating platform and its associated mooring systems must be submitted to the cognizant OCMI for review and final determination of its status for inspection purposes.

A MODU that is converted to a wind farm platform will no longer be under Coast Guard jurisdiction as an inspected vessel or facility. A MOU with Bureau of Ocean Energy Management (BOEM) is being promulgated to clarify jurisdictional boundaries pertaining to these non-OCS Activity structures.

M. REVIEW OF MODU OPERATING MANUALS

Review and approval of the new and existing MODU operating manuals should be accomplished through the following procedures.

1. Marine Safety Center (MSC)

The Marine Safety Center (MSC) will review manuals of existing units for compliance with 46 CFR 109.121(b)(1), (3)-(7), (9)-(18) and, if acceptable, forward the manual, the results of the review, and an undated stability letter to the OCMI.

2. OCMI

The OCMI will then review the remaining sections of the manual, accepting MSC's review for compliance with the aforementioned sections as appropriate, and if satisfied, approve the manual, as well as date and issue the stability letter.

3. Stability Letter

After issuing the stability later, the OCMI will forward a copy of both the stability letter and the letter approving the manual to the MSC. If, during the life of the unit, the OCMI becomes aware of changes to the manual or unit which would affect stability or conditions under which the stability letter was developed, MSC should be notified.

4. Operations Manual

The MSC will review the entire operating manual in the case of new units.

N. REVIEW OF EMERGENCY EVACUATION PLANS (EEPS)

To improve efficiency and consistency throughout the Coast Guard, OCMI's are encouraged to exercise their authority under 33 CFR Subchapter 140.15(a) and permit alternate procedures to those specified in 33 CFR Subchapter N for submission and approval of EEPs under 33 CFR 146.140 and 146.210. Further, OCMIs may opt to no longer require review and approval of EEPs that have been submitted due to minor changes in the plan. All EEPs will continue to be checked in the normal course of platform and MODU inspections, and deficiencies will be reported as Vessel/Facility Inspection Requirements, Form CG-835, items. Regional EEPs may also be submitted for multiple OCS facilities operated by the same company but in different geographic areas, as long as the EEP is submitted to each of the cognizant OCMIs for review and approval.

O. ELECTRICAL INSTALLATIONS ON MODUS

NVIC 2-89 should be used as a guide for electrical installations on MODUs. The NVIC was prepared to provide industry with information on regulatory intent, background, and common practices which have been found to provide a level of safety equivalent to that provided for by specific regulations. Enclosure (1) to NVIC 2-89 is a guide to Coast Guard Electrical Engineering Regulations, 46 CFR 110 - 113, and provides details on acceptable methods of complying with the regulations as well as other important information related to electrical installations.

P. NAVIGATION LIGHTING

MODUs are required to comply with the Navigation Rules, International-Inland, COMDTINST M16672.2C (series). Per Navigation Rule 3 and as defined in 33 CFR 140.10, MODUs are vessels and shall abide by the Navigation Rules and properly display navigation lights and shapes (i.e. Rules 22, 23(a), 27(d), etc.). MODUs, particularly when drilling, are also subject to other regulations denoted in Title 33 CFR, parts 67 and 140-147 (Subchapter N).

> Note: A vessel being propelled by a dynamic positioning system (e.g. MODU) may be considered underway even when hovering on location, but, may also be "restricted in her ability to maneuver" as defined by Navigation Rule 3 (International-Inland).

Q. ACCEPTANCE OF TEMPORARY INDUSTRIAL EQUIPMENT INSTALLED ON U.S. FLAG MODUS OPERATING IN FOREIGN WATERS

1. Discussion

U.S. flag MODUs operating in foreign waters are sometimes subject to coastal state requirements and equipment availability problems unique to their location.

a. Subcontractor services, including well logging, cementing, casing perforation, etc., often require temporary installations. These installations may include electrical equipment, pressure vessels, packaged boilers, etc.

b. Temporary industrial installations provided by local contractors sometimes meet local equipment listing (certification) or design code requirements. From a practical standpoint, it has become necessary to acknowledge coastal state requirements and logistical problems and permit temporary installations that are approved by the coastal state, when it is safe to do so.

c. The goal of this policy is to fulfill the safety principals and features embodied in U.S. regulations, while recognizing the operational constraints in some geographical areas.

---

2. Coastal State Requirements

Where temporary equipment or systems are installed, those items listed by an independent laboratory or constructed to a recognized design standard may be permitted by the OCMI in whose zone the vessel is operating.

a. In making a decision to permit temporary installations, a review of records relating to design, testing, and inspection of equipment such as boilers and pressure vessels shall be conducted by the Coast Guard. The frequency and scope of recorded inspections should approximate U.S. regulations.

b. Upon return to U.S. waters and prior to engaging in OCS activities, MODUs must fully comply with equipment listing requirements in U.S. regulations.

R. SINGLE VOYAGE LOAD LINE AUTHORIZATIONS

1. Applicability

46 CFR 42.03-30 (f) provides that a vessel that does not usually engage on domestic voyages by sea but that, in exceptional circumstances, is required to undertake a single voyage between two specific ports is:

a. Subject to 46 U.S.C. 5101 – 5116 and the applicable regulations of Subchapter E; and

b. issued a single voyage load line authorization by the Commandant that states the conditions under which the voyage may be made and any additional safety measures for a single voyage.

2. Exceptional Circumstances

a. Examples of “exceptional circumstances” as it pertains to the issuance of single voyage load line authorizations.

(1) Where the owner changes the location of his or her business operations, and desires merely to move his or her craft to the new base of operations and not in fulfillment of any contract;

(2) Where the owner sells his or her business or one of his or her vessels to another and it is necessary to move the vessel or vessels to the location specified by the new owner;

(3) Where a voyage is necessary to deliver a new vessel to its owner at a port other than where the craft was constructed;

(4) Where a voyage is made to another port for the purpose of making repairs or alterations; and

(5) Where a vessel that is not otherwise subject to the loadline provision (because it operates exclusively inside the Boundary Line) must make a single transit outside the Boundary Line to reach a new location for operations exclusively inside the Boundary Line.

b. The above clarification of "exceptional circumstances" does not change the applicability of load line regulations for types of vessels that are currently exempt from such requirements (such as small passenger vessel on a domestic voyage).

c. A table of required load lines for U.S. vessels can be found as Figure 1-1 on page 1-3 in the CG-ENG-2 (formerly CG-5212) Load Line Policy Notes. This document can be located online at: http://www.uscg.mil/hq/cg5/cg5212/docs/LLPN.pdf. It provides appropriate load line types for international voyages, domestic voyages and other types of voyages and for certain routes encompassed by those voyages.

d. For further details on the "exceptional circumstances" as it pertains to the issuance single voyage load line authorizations and voyage requirements for seagoing barges and other vessels, see CG-543 Policy Letter 10-01.

Vessel Service (see note 1.)	Vessel Particulars	COI needed/cite	LoadLine needed/ cite	Draft/ Voyage Requirements needed/ cite
Seagoing motor vessel (See note 2.)	Vsl 300 grt or more; 79' or more.	YES 46 USC 3301	YES 46 USC 5102	N/A (Issued Load Line)
Non-seagoing motor vessel (See note 3.)	Vsl 300 grt or more; 79' or more; COE (part of trip is beyond Boundary Line)	YES 46 USC 3301	N/A 46 USC 5102	YES MSM Vol. IV, pages 6-92 & 6-94
Non-seagoing motor vessel (See note 3.)	Vsl less than 300 grt but greater than 150 grt or 79' or more; COE (part of trip is Beyond Line).	N/A 46 USC 3301	N/A 46 USC 5102	YES MSM Vol. IV, pgs 6-92 & 6-94
Non-seagoing motor vessel	Vsl less than 150 grt or less than 79'; COE (part of trip beyond Boundary Line).	N/A 46 USC 3301	N/A 46 USC 5102	N/A (Not issued load line)

Notes:
1. All vessels in this table are commercial vessels conducting domestic voyages.
2. "Seagoing" means voyages beyond the boundary line in the course of normal employment.
3. "Non-seagoing" means the vessel cannot operate beyond the Boundary Line w/out CG Authorization.
4. Acceptable types of load lines for a given voyage can be found in Figure 1-1 on page 1-3 in CG 5212's Load Line Policy Notes.

S. LIFESAVING EQUIPMENT

1. Excess Capacity of Lifeboats

Lifeboat capacity in excess of that required by 46 CFR 108.503 may be substituted for life rafts subject to the following provisions:

a. No single lifeboat or liferaft may be credited with more than 100 percent of persons allowed on the MODU.

b. Lifeboats must provide for at least 100 percent capacity.

c. Lifeboats and life rafts combined must provide for at least 200 percent capacity.

d. Lifeboats and life rafts must be arranged so that a limited area fire or other casualty does not immobilize lifeboats or liferafts accommodating more than 100 percent capacity.

2. IMO MODU Code Compliance

The above policy satisfies the intent of 46 CFR 108, Subpart E, i.e., to require each MODU to have a total combined lifeboat and liferaft capacity to accommodate 200 percent of the persons allowed on board.

a. MODUs equipped with lifeboats and liferafts in accordance with U.S. regulations may not necessarily be in compliance with the IMO MODU Code. Therefore, when certificating units for operation in other than domestic service, the operator should be cautioned that a COI does not certify compliance with the IMO MODU Code.

b. The IMO MODU Code requires certain survival craft be arranged for float free operation.

c. The IMO MODU Code does not specifically provide for substituting lifeboats for liferafts. When verifying compliance with the IMO MODU Code Certificate, additional lifeboats or liferafts may be necessary to meet the requirements of both 46 CFR Subchapter I-A (davit launch capability) and IMO (float free).

(1) If davit launched liferafts are also arranged for float free operation and accommodate 100 percent of the persons allowed on board, then they meet the requirements of both U.S. regulations and the IMO MODU Code.

(2) An alternative approach may be installing lifeboats to accommodate 200 percent capacity (meeting 46 CFR 108.515 - with substitution) and float-free, throw-over rafts for 100 percent capacity (meets IMO MODU Code requirement for float-free).

3. Throw-over Liferafts

Throw-over liferafts are only permitted on submersible MODUs. NVIC 4-78 Ch. 1 permits submersible MODUs may substitute Coast Guard-approved throw-over inflatable liferafts and an approved rescue boat for the required davit launched lifeboats.

T. MODU DRYDOCKING INTERVAL AND REQUESTS FOR EXTENSION

1. Drydock Intervals

Under current Coast Guard regulations, all other class of vessels require the twice in a five year interval for dry docking or special examination. Coast Guard guidance allows MODUs the same option with drydock examinations conducted in the presence of a Coast Guard inspector. These may be conducted at least twice within any 5-year period after issuance of a COI or COC with no more than 3 years elapsing between any two examinations.

2. Extensions

Requests for an extension of a drydock or special underwater survey on a MODU should be considered on a case by case basis using the following additional guidance.

a. The beginning of the 5-year period is the credit date of the previous hull exam. Every effort should be made to encourage owners and/or operators of MODUs to complete the next hull exam between the 2nd and 3rd year anniversary (1 year window) and in conjunction with a rig move, when both the upper hull and underwater portions of the exam can be conducted. Intervals between any two surveys should not exceed 36 months.

(1) In cases where this is not practical, (independent leg jack-up, on location) the upper hull exam should be conducted and credit given, with a requirement to complete the underwater examination at the next rig move. Such a procedure should alleviate the need for hull exam extensions, even at the end of the 5-year period.

(2) Outstanding requirements must be closely monitored to ensure they do not remain outstanding for excessive periods (typically 90 days or more depending on requirement).

c. Near the end of the 5-year interval, operators should be encouraged to complete the hull exam early, if necessary, so that it may be accomplished during a rig move, when both the upper hull and underwater portions of the exam can be completed. Such exams may be credited as of the date the 5-year cycle would end even though conducted early.

U. RAW WATER TOWERS

The raw water tower if utilized is would be the source of supply water for vital systems, including firewater and engine cooling, and should be given close scrutiny during drydock inspections or special underwater surveys in lieu of drydocking on all MODUs that still use this system.

At this inspection, the tower should be raised and lowered to the extent necessary to allow a complete inspection to ensure its structural integrity. Particular attention should be paid to the rack to chord connections.

If the tower is of two piece construction with a flanged midsection, the area in way of the flange should be closely examined for fracturing.

V. UNDERWATER INSPECTION IN LIEU OF DRYDOCKING (UWILD)

1. Discussion

Owners/operators have the option of alternating drydock exams with underwater surveys under the following regulations: 46 CFR 31.10-21(d) (Subchapter “D” – Tank Vessels), 91.40-3(d) (Subchapter “I” – Cargo and Misc Vessels) and 189.40-3(d) (Subchapter “N” – Oceanographic Research Vessels). Underwater examinations in 46 CFR 107, for column-stabilized and self-elevating MODUs is also allowed. Vessels over 15 years old may be allowed to remain in the program provided the requirements in NVIC 1-89 are met.

A UWILD is different from a Special Exam in Lieu of Drydocking **(**SEILOD). A vessel enrolled in the UWILD program is permitted to conduct a UWILD in lieu of every other dry-dock. For example, a vessel would be required to drydock a vessel at year 2.5, 5, 7.5,10 and 12.5; they would be permitted a UWILD at year 2.5, 7.5 and 12.5.

Special Examinations in lieu of Drydock (SEILOD) exams are alternatives to the traditional

drydock intervals and allow a vessel to conduct a SEILOD at *EVERY* dry-dock interval versus every other as in the case of UWILD's. See Part "X" of this Chapter for a description of the SEILOD Program.

---

2. Approval

Many factors are to be considered before approving UWILD requests, including rig operations, weather, and diving conditions. NVIC 1-89 offers guidance on the procedures for approval and conduct of an UWILD exam. The process for conducting an UWILD should be in accordance with this NVIC.

a. Prior to the UWILD, there should be a pre-inspection meeting between the Coast Guard and owner/operator of the MODU. The owner/operator must also submit an inspection plan to the OCMI for approval.

b. The owner/operator must provide the OCMI with a set(s) of plans detailing the MODUs hull design, showing all through hull fittings and original scantlings.

c. The following items should be discussed during the meeting.

(1) A hull gauging strategy should be agreed upon, detailing the method to be employed and critical locations to be examined.

(2) The contract divers should be presented to the OCMI for approval. The divers should be experienced in conducting UWILDs. Any divers that have been certified by ABS will meet this requirement.

(3) Agreement should be reached concerning which through hull fittings are to be opened for inspection. If a partial inspection of through hull fittings are opened for inspection, an exact listing must be made in the diary entry and an inspection note in MISLE must be made detailing which valves were examined must be made.

d. The marine inspector must carefully review the plans and video tapes of the previous exam (if available) prior to conducting the UWILD.

e. The MODU must be placed in the lightest working draft within acceptable stability limits. The area above the waterline will receive a traditional examination.

(1) Particular attention should be paid to high stress areas such as the joints of structural members.

(2) All internal compartments must be entered and visually examined. Before anyone

enters a confined space, the space must be certified gas free by an NFPA-certified Marine Chemist.

(3) All through hull fittings and sea valves must be given the same examination as during a regular drydock examination.

f. The hull must be cleaned and free of marine growth.

g. The gauging of the hull may be internal or underwater. If acceptable to the OCMI, at every second examination, the owner may have the examination conducted while the unit is at its working draft. This examination must be conducted as above with the following exceptions.

(1) The hull gauging must, of necessity, be accomplished using underwater ultrasonic techniques.

(2) A representative number of welds in stress areas must be examined using underwater ultrasonic techniques acceptable to the OCMI. Records of indications, such as sketches of detected flaws, must be maintained in sufficient from to be used for comparative purposes during subsequent inspections.

(3) Only the internal compartments which are accessible in the working condition will be entered and examined.

---

3. Calibrate NDT

The Marine Inspector must be satisfied that the non- destructive testing equipment is properly calibrated prior to use.

---

4. Post-Inspection Actions

The owner/operator or private contractors must provide the Marine Inspector with the following:

a. Copy of underwater hull survey video.

b. Copy of diver's report.

c. Copy of hull gauging report.

d. Copy of results of non-destructive testing.

---

5. Liveboating

Underwater exams performed during rig movements may involve liveboating. Liveboating means the support of a surfaced-supplied diver from a vessel underway without DP ability. (DP operations are described in Chapter 6 of this Manual.). When the rig owner or operator submits a request and plan for the underwater exam, they should be directed to also request a variance for liveboating, should one be needed.

a. See 46 CFR Part 197 for a discussion of liveboating.

b. All requests for a liveboating "variance", or alternative to the regulations, must be forwarded to Commandant (CG-CVC) for approval.

---

6. Approval Authority for Plans

a. Requests for approval of underwater examination in lieu of drydocking for surface type units should be forwarded to Commandant (CG-CVC), via the District Commander, with the OCMI's recommendation. If conceptual approval is granted by Commandant, the OCMI will review and approve the details of the plan using NVIC 12-69 and NVIC 1-89 as a guide.

b. All underwater survey plans must specifically address methods of testing confined spaces for toxic vapors and oxygen content and rescue equipment/methods available for removing an unconscious person from a confined space. Normally, this requires some portable lifting equipment.

c. In all cases, the class society should be contacted for concurrent approval and a class representative should be on hand to witness the UWILD examination.

---

7. Internal Inspection of MODU Spud Cans

46 CFR 107.261 and 107.267 require dry docking or SEILOD for self elevating units.

a. The MODU structural regulations in 46 CFR Part 108 recognize ABS Rules for Building & Classing Offshore Mobile Drilling Units, 1978.

b. Coast Guard Standard policy is to use the ABS "Survey after Construction" rules and those for "SELOID" in evaluating and conducting SEILOD inspections.

c. For consistency purposes, OCMIs will not normally require internal examinations of spud cans until the MODUs second special survey (10th year) and at least 5-year

intervals thereafter, in conjunction with each special survey.

d. The marine inspector must conduct external examinations of the MODUs spud cans in accordance with the regulations. Nothing in this section prohibits the equipment listing (certification) or design code on a MODU from requiring an earlier internal examination if conditions warrant further scrutiny.

W. SPECIAL EXAM IN LIEU OF DRYDOCKING (SEILOD)

If a MODU is column-stabilized, self-elevating, or is a surface type, it may be specially examined in lieu of drydocking in accordance with 46 CFR 107.265 and .267, in the presence of a Coast Guard inspector.

Delegation of approval authority for SEILOD's, permitted by 46 CFR 107.261, is extended to district (OCS) offices. Commandant (CG-CVC) retains approval authority for surface type units only.

NVIC 12-69 offers guidance on the procedures for approval and conducting a SEILOD exam.

X. COMMERCIAL DIVING

Commercial diving equipment and operations, including those conducted on USCG inspected vessels, platforms, MODUs, or foreign flag vessels engaged in OCS activities shall be in accordance with 46 CFR Part 197, Subpart B. Commandant (CG-CVC) will coordinate with appropriate Coast Guard Headquarters offices (e.g. CG-ENG and CG-OES) as needed to ensure that any substitution of required equipment, materials, apparatus, arrangements, procedures or tests provides an equivalent level of safety.

In general, pressure vessels for human occupancy (PVHOs) must be designed, constructed, inspected and stamped in accordance American Society of Mechanical Engineers (ASME) PVHO-1, "Safety Standard for Pressure Vessels for Human Occupancy." Piping systems must be designed in accordance with 46 CFR Subchapter F and electrical equipment must be designed in accordance with 46 CFR Subchapter J. Dive equipment requirements are specified in 46 CFR 197.300 through 197.346 and dive operational requirements are specified in 46 CFR 197.400 through 197.488.

Alternatives to the specified requirements will be considered on a case by case basis. Authorized Classification Society Dive Safety Certificates and International Diving system Safety Certificates are not considered as equivalent to 46 CFR subpart 197 requirements; however,

these certificates will be considered in making an equivalency determination.

TABLE OF CONTENTS

A. Certificate of Compliance (COC) G3-3
1. Application G3-3
2. Administration G3-4
3. Options A, B, or C G3-4
4. Load Line Certificate G3-5
5. U.S. Territorial Sea/Contiguous Zone Restrictions G3-5
6. Financial Responsibility for Oil Pollution G3-6
7. Prevention of Oil Pollution and IOPP Compliance G3-6
8. Discharges of Pollutants from OCS Facilities G3-6
9. IMO MODU Code G3-6
10. SOLAS Certificates G3-6

B. Specific Requirements Pertaining to Options A, B, or C, Prescribed under 33 CFR §143.207 and 146.205 G3-9
1. Units Applying for a COC under Option A G3-9
2. Units Applying for a COC under Option B G3-9
3. Units Applying for a COC under Option C G3-10

C. Equivalency of Panama's Existing MODU Rules G3-10
1. Applicability G3-10
2. Notification G3-10
3. Issuance of a COC G3-10

D. Equivalency of Marshall Island's Existing MODU Rules G3-12
1. Applicability G3-12
2. Issuance of a COC G3-12

E. Stability G3-13

F. Foreign MODU Operating Manuals G3-14

G. General Safety Requirements G3-14
1. Workplace Safety G3-14
2. Drydock Examination/Special Exam in Lieu of Drydocking G3-14
3. Cranes G3-15
4. Pressure Vessel Internal Exams G3-16
5. Lifesaving Appliances G3-16
6. Carriage of Exposure Suits G3-17
7. Fire Safety G3-17

8. Alarms, Remote Controls, and Other Safety Devices G3-17
9. Emergency Lighting Systems G3-18
10. Helicopter Facilities G3-18
11. Navigational Lighting G3-18

H. Acceptance of Foreign Equipment G3-19

I. Foreign Flagged Units Stacked or Laid-up on the U.S. OCS, Contiguous Zone, or Territorial Waters G3-19

J. Citizenship Requirements G3-19

K. Emergency Evacuation Plan G3-19

L. COC: Failure to Meet Requirements G3-20

M. MARPOL ANNEX VI G3-20
1. Applicability G3-20
2. Definitions G3-21
3. Inspections G3-21
4. Certificates G3-21
5. Exceptions/Exemptions G3-21
6. Underway G3-22
7. Vessels with Dynamic Positioning (DP) G3-22

N. Risked-Based Targeting of Foreign Flagged MODUs G3-22
1. Introduction G3-22
2. The Matrix G3-23
3. Procedures G3-23
4. MODU Safety and Environmental Protection Compliance Targeting Matrix Scoring G3-24
5. Targeting Decision and Examination Frequency G3-27
6. Priority Downgrade Clause G3-27
7. Stacked MODUs G3-28
8. Random Examinations G3-28
9. Documentation of Foreign-Flagged MODU Exam Activities G3-28
10. MODU Matrix G3-31

Note: Any reference to IMO MODU Code is the 1979 Code unless otherwise noted.

A. CERTIFICATE OF COMPLIANCE (COC)

The regulations prescribed in 33 CFR, Subchapter N, establish minimum standards for all MODUs operating on the U.S. OCS, including undocumented MODUs and those documented under the laws of a foreign nation. The purpose of these regulations is to ensure that all MODUs operating on the U.S. OCS are designed, equipped, and operated at a level of safety generally equivalent to or greater than that of U.S. MODUs certified in accordance with Title 46 CFR, Parts 107, 108 and 109. Prior to engaging and when engaged in OCS activities, each foreign MODU must have onboard a valid Coast Guard issued Certificate of Compliance (COC), Form CG-3585.

Note: Some current U. S. vessel inspection laws and regulations include several references to the Certificate of Compliance (COC), Form CG-3585. Unfortunately, other out dated regulations specify the use of a Letter of Compliance (LOC). Coast Guard policy in the CFR, NVICs and elsewhere, has not been changed completely to account for this newer terminology. For the purposes of the OCS, LOC shall be taken to mean COC and shall be valid for a period of two years.

1. Application

It is highly recommended the owner or builder of a foreign MODU apply for an examination for obtaining a COC at least 6 months prior to engaging in U.S. OCS activities by submitting:

a. A written or e-mailed request for COC examination to the Officer in Charge, Marine Inspection (OCMI), of the marine inspection zone in which the unit intends to operate; and

b. evidence that all applicable user fees have been paid in full.

Full COC exams are not normally conducted overseas, however, certain portions of new vessel trials (DP) may be witnessed by overseas Coast Guard inspectors as resources allow. All efforts should be made to coordinate these pre-inspection opportunities with an overseas inspection office and communicate the results with the local OCMI where the unit will eventually receive its COC. All activities should be documented in MISLE.

2. Administration

a. All documents submitted to the Coast Guard must be accompanied by an English translation if the originals are in a foreign language. An example of a COC pre-inspection information sheet is located at the end of this section and may be used to request vessel data when scheduling a COC exam. **The OCMI shall NOT schedule or conduct a COC exam until the appropriate user fees have been paid.**

b. COC's are valid for 2 years, or until the unit departs the U.S. OCS, provided the MODU undergoes an annual examination within 3 months before or after the COC anniversary date and continues to meet the requirements of 33 Subchapter N. The COC is to be maintained onboard the vessel and be readily available to Coast Guard personnel upon request.

c. To avoid delays, the OCMI is encouraged to complete COCs when requested within three months of their expiration date. At the discretion of, and with the prior approval from, the local OCMI, MODUs with expired COCs (renewal or annual) that are not more than three months past due, and with no indications that the vessel is not in compliance with applicable laws and regulations, should not be restricted from commencing operations prior to an examination. Vessel owners, operators and agents are required by 46 CFR 146.202 to provide notice to the District Commander of the area in which it intends to operate at least 14 days in advance of arrival on the OCS.

d. Current U.S. vessel inspection laws, regulations and documents include references to both "Certificate of Compliance (COC)" and "Letters of Compliance (LOC)". The Certificate of Compliance (COC) may be used in lieu of Letters of Compliance (LOC). While the terminology has changed, the scope of the exam remains the same.

e. The COC may be issued with certain outstanding discrepancies permitted at the discretion of the cognizant OCMI. The discrepancies will be noted in the examination record section of the COC and documented in MISLE. The COC will NOT be issued with uncorrected discrepancies if during the course of the inspection the ship or the crew is unable to navigate safely (if applicable), maintain the fire fighting and lifesaving equipment, prevent pollution of the environment, maintain adequate stability, watertight integrity, and safely engage in OCS activities. Discrepancies left uncorrected from an initial COC exam will be cause for denial of subsequent COCs.

3. Options A, B, or C.

Foreign Flagged MODUs engaged in OCS activities must comply with one of the following

options per 33 CFR Subchapter N, except for those exempted from design and equipment requirements by 33 CFR 143.201:

a. Option A: U.S. Standards (33 CFR 143.207(a) and 146.205(a)): The MODUs design equipment, and operating standards must comply with 46 CFR Parts 108 and 109.

b. Option B: Equivalent Standards of Documenting Nation (33 CFR 143.207(b) and 146.205(b)). The MODU must comply with the design, equipment, and operating standards of the MODUs documenting nation, if they provide a level of safety equivalent to or greater than that set forth in 46 CFR Parts 108 and 109. Currently Marshall Islands and Panama have been accorded this status.

c. Option C: IMO MODU Code Compliance (33 CFR 143.207(c) and 146.205(c)). The MODU must comply with the standards for design, equipment and operations standards as set forth in the 1979 IMO MODU Code IMO Assembly Resolution A.414 (XI).

Coast Guard policy determined the design and equipment standards of the 2009 MODU Code to be as least as effective as the design and equipment standards of the 1979 and 1989 MODU Codes (see CG-ENG Policy Letter 02-12). Therefore, a foreign MODU in compliance with the design and equipment standards of the 2009 MODU Code may be accepted under 33 CFR 143.207(c).

Foreign flag MODUs are issued IMO MODU Code Safety Certificates by their respective governments or third party organizations designated by their governments.

---

4. Load Line Certificate

Each MODU documented in a country signatory to the 1966 International Convention on Load Lines (ICLL) shall have a valid ICLL certificate. If the MODU does NOT have a valid ICLL certificate or is documented under the laws of a nation not signatory to the 1966 convention the owner must apply for and obtain a Form “B” certificate in accordance with the provisions of 46 CFR Part 42. Owners and operators should be cognizant of the annual survey requirements. Un-classed units built prior to 1969 will not be required to obtain a load line but will require a freeboard assignment. Applications for a freeboard assignment should be directed to the Marine Safety Center.

---

5. U.S. Territorial Sea/Contiguous Zone Restrictions

The COC permits operation of a unit only upon the U.S. OCS. Units entering the U.S. contiguous zone (33 CFR 2.28) or territorial sea (33 CFR 2.22) must be in compliance with applicable pollution prevention regulations (33 CFR 156 and 155), marine sanitation device

regulations (33 CFR 159), navigation safety regulations (33 CFR 164) and the requirements for financial responsibility for water pollution (33 CFR 138 or 30 CFR 553). Units not in compliance with these regulations are prohibited from entry into these areas and restrictions will be noted in MISLE and on the COC.

---

6. Financial Responsibility for Oil Pollution

Prior to issuance of the COC, the owner and/or operator of each foreign documented MODU must obtain a Certificate of Financial Responsibility and/or provide proof of Oil Spill Financial Responsibility for Offshore Facilities in accordance with 33 CFR 138 or 30 CFR 553 respectively.

---

7. Prevention of Oil Pollution and IOPP Compliance

All units must comply with the provisions of 33 CFR Parts 151 and 155 for the prevention of oil pollution. All ocean going units 400 gross tons and above must comply with the equipment requirements on the International Oil Pollution Prevention (IOPP) certificate (MARPOL 73/78).

---

8. Discharges of Pollutants from OCS Facilities

When engaged in drilling operations, each unit must have a valid National Pollution Discharge Elimination System (NPDES) Permit, as required, issued by the Environmental Protection Agency (EPA).

---

9. IMO MODU Code

All MODUs electing to comply with 33 CFR Subchapter N with an International Maritime Organization (IMO) Certification may be determined to be in compliance with 33 CFR Subchapter N if it is in full compliance with the IMO MODU Code. Exceptions, exemptions, equivalencies, or modifications must be reviewed and accepted by the cognizant OCMI prior to conducting operations on the OCS. All requests and approvals or denials should be documented in MISLE as a special note.

---

10. SOLAS Certificates

a. Foreign flagged MODUs “propelled by mechanical means" and over 500 GTs, must hold valid SOLAS **and** IMO certifications.

(1) Safety Construction

(2) Safety Equipment

(3) Radiotelephony or Radiotelegraphy (if applicable)

(4) International Safety Management (ISM) Certificate/Document of Compliance (DOC)

(5) International Ship Security Certificate (ISSC) (*Note per SOLAS Chapter XI-2 reg 1.5, it does not apply to a MODU "on location" but they need it to move from location to location, so a MODU should have all of the required equipment and certificates). Inspectors should carefully consider the applicability of 33 CFR 104 and 106 depending on the MODUs location and/or operations.

(6) International Oil Pollution Prevention Certificate (IOPP)

(7) Shipboard Oil Pollution Emergency Plan (SOPEP)

(8) International Air Pollution Prevention Certificate (IAPP)

(9) National Pollution Discharge Elimination System (NPDES) Permit (as applicable)

b. A valid, IMO MODU Code Certificate may be accepted in lieu of the required SOLAS certificates for those matters covered by the MODU Code. In NO case will a MODU Code Certificate containing exemptions or exceptions be accepted as an adequate substitute for the required SOLAS certificates.

Pre-Inspection Information Sheet for a Certificate of Compliance (COC)

Cognizant OCMI: _____ Requested exam date: _____

Name of Vessel: _____ IMO Number: _____

Type (semi-submersible, jack-up, drillship, etc…)_____

Call Sign: _____ Nation of Registry: _____

Is the unit Classed?: Yes _____ or No _____

Classification Society: _____

IMO MODU Code Certificate?: Yes ____ No___ SOLAS Certificates?: Yes ____ No _____

Issuing Authority: _____

Owner/ Operator: _____

_____

Total Persons to be Accommodated: _____

Equipped with Dynamic Positioning: Yes ____ No ____ DP Class notation: _____

(*If yes, include Safe Manning Certificate information (or include copy of document)*)

Intended Area of Operation:

_____

Location of exam: _____

Inspection Option Desired:

Check one:	Check one:
33 CFR 143.207 (a) _____	Initial _____
33 CFR 143.207 (b) _____	Renewal _____
33 CFR 143.207 (c) _____	Annual _____

User Fees Paid?: Yes _____ No _____

Owner/Operator representative: _____ Contact Number: _____

Signature: _____ Date: _____

B. SPECIFIC REQUIREMENTS PERTAINING TO OPTIONS A, B, AND C PRESCRIBED UNDER 33 CFR 143.207 AND 146.205

1. Units Applying for a COC under Option A

a. *New MODUs* – All new units must comply with the design, equipment and operating standards contained in 46 CFR Parts 108 and 109.

b. *Existing MODUs* – All existing units will be inspected as in the above paragraph. However, units contracted for before January 3, 1979, and issued a Certificate of Inspection (COI) under 46 Subchapter I may continue to meet the requirements in force at the time of the COI issuance but must also meet the applicable requirements of 46 Subchapter I-A as specified in Navigation and Vessel Inspection Circular, "Inspection and Certification of Existing Mobile Offshore Drilling Units" (Appendix A of 46 CFR Part 109) until the unit is rebuilt. After a rebuild, the unit must meet the requirements of 46 CFR Subchapter I-A. The definition for REBUILT can be found in 33 CFR 140.10.

c. Acceptance *of Foreign Equipment* – foreign equipment may be accepted by the OCMI in accordance with Part H of this Chapter (3).

2. Units Applying for a COC under Option B

a. The owners of a new or existing MODU seeking a COC under this option should ascertain whether the flag state's MODU standards have received a statement of equivalency from Commandant (CG-CVC). The flag state's MODU standards are compared against Coast Guard inspection standards and the equivalency is granted when it is determined the flag state's standard provide a level of safety and is generally equal to those of U.S. MODUs.

b. If not, the flag state must submit its MODU standards to Commandant (CG-CVC) for review and approval. The submittal should be made at least six months prior to commencing a COC inspection under this option.

c. The units must meet the operating requirements specified in 33 CFR 146.205(b). Until the Coast Guard has determined that the standards of the flag state are generally equivalent to those of the U.S., a foreign flagged MODU may not obtain a COC under this option. Questions concerning acceptance of equivalencies should be addressed to Commandant (CG-CVC).

d. See Parts C and D of this Section (G) for information on equivalencies for Panama and Marshall Islands.

---

3. Units Applying for a COC under Option C

a. The owner of a new or existing unit should present the cognizant OCMI with a valid, full compliance IMO MODU Code Certificate issued by the flag state or agent authorized by the documenting nation to act on its behalf.

b. Certificates with exemptions or exceptions will be reviewed by the OCMI to ensure the spirit of the Code has been met. Units must meet the operating requirements specified by 33 CFR 146.205(c). The OCMI may deny any exemption or exception issued by a flag state.

C. EQUIVALENCY OF PANAMA'S EXISTING MODU RULES

---

1. Applicability

a. Panama’s MODU rules are based on the IMO MODU Code.

b. Panama's Technical Note 1/83 modified its MODU rules for existing units that cannot comply with the IMO MODU Code. An evaluation of Panama's Technical Note 1/83 determined that, the rules for existing units are generally equivalent to those provided under 46 CFR Part 108, as applied to existing U.S. flag units with the exception of those items listed in paragraph 3 below.

---

2. Notification

Commandant (CG-CVC) must be notified if examinations of Panamanian MODUs for issuance of COCs under either 33 CFR 143.207(b) or 33 CFR 143.207(c) reveal a significant or an inordinate number of discrepancies.

---

3. Issuance of a COC

Existing Panamanian MODUs are eligible to receive an COC under 33 CFR 143.207(b) provided that--

a. They were built, under construction, or contracted for prior to 5 April 1982 and are documented under the laws of Panama;

b. They hold and are in compliance with a valid Panamanian MODU Safety Certificate issued under the provisions of Technical Note 1/83Technical Note 1/83;

c. The unit's boilers and pressure vessels have been satisfactorily internally examined or hydrostatically tested within 12 months of the date of application for a COC;

d. A dry dock or special underwater examination in lieu of drydock has been satisfactorily conducted within 24 months of the date of the COC application;

e. All units (except those unclassed units built prior to 1969) have a valid loadline;

f. Units comply with the 70 and 100 knot wind intact stability criteria. A relaxation to a minimum 50 knot wind criteria may be permitted based on satisfactory previous service and appropriate limitation;

g. Units comply with the applicable operating requirements of 33 CFR 146.205;

h. All equipment installed in Zone 1 (Class 1, Division 1) or Zone 2 (Class 1, Division 2) hazardous areas, as defined in 46 CFR 108.170 through 177, is explosion-proof, intrinsically safe, or purged and pressurized, and in good material condition;

i. All units comply with the provisions of 46 CFR 108.123 and 108.127, in addition to meeting the structural fire safety requirements for interior stairways and wood construction in Technical Note 1/83;

j. All units are in substantial compliance with the helo deck fire safety equipment standards found in 46 CFR 108.486 through 108.496 and 46 CFR 108.653;

k. The unit's lifeboats are rigid, totally enclosed, motor-propelled, fire protected, davit launched survival craft, and are constructed to comply with the requirements of SOLAS 74, Chapter III Regulations 5, 6 and 7 for lifeboats or the provisions of 46 CFR 160.035.

l. Lifeboat equipment is in accordance with 46 CFR 108, subpart E or the provisions of SOLAS 74, Chapter III, for lifeboats.

m. Life rafts are equipped for ocean service in accordance with 46 CFR 108, Subpart E or the provisions of SOLAS 74, Chapter III, for life rafts;

n. Lifesaving appliance launching devices have been satisfactorily weight tested within 12 months of the date of the COC application; and

o. Life preservers are provided for 125 percent of the persons allowed on board and are

equipped with whistles, lights and retro-reflective material in accordance with 46 CFR 108, subpart E.

p. All units comply with the requirements of 33 CFR 144.30 pertaining to exposure suits.

D. EQUIVALENCY OF MARSHALL ISLAND'S EXISTING MODU RULES

1. Applicability

MODUs possessing a valid Marshall Islands' MODU Safety Certificate of Compliance issued in accordance with the Republic of the Marshall Islands "Mobile Offshore Drilling Unit Standards", Publication MI-293 must also meet the requirements identified below before a COC will be issued. Compliance with these requirements will be verified at the discretion of the OCMI to which application for a COC has been made.

2. Issuance of a COC

a. All units shall comply with the applicable provisions of 33 CFR Subchapter N. This includes, but is not limited to inspections, investigations, citizenship requirements, restrictions on employment, workplace safety and health, and operational requirements for foreign MODUs.

b. All units shall comply with the applicable provisions for pollution prevention. . This includes, but is not limited to the Act to Prevent Pollution from Ships, and MARPOL 73/78.

c. All units shall comply with the applicable provisions of 33 CFR Part 164 – Navigation Safety Regulations. This includes, but is not limited to charts, publications, navigation equipment, testing, maintenance and reporting requirements.

d. Testing and Inspection of Pressure Vessels and Relief Valves – Pressure vessels shall be internally examined once every five years and relief valves shall be tested twice in five years with no interval more than three years in accordance with 46 CFR 61.10 and G-MOC Policy Letter 01-03.

e. Additional Lifesaving Equipment – All units shall comply with the additional lifesaving requirements contained in 46 CFR 108.503. Drillships not in possession of a valid MODU Safety Certificate (1989) shall comply with the requirements of 46 CFR Subchapter W.

f. Maintenance, Testing & Inspection of Lifesaving Equipment – All units shall comply with the maintenance, testing and inspection requirements contained in 46 CFR 109.301. All required maintenance, tests and inspections shall be documented.

g. Testing & Inspection of Fire Fighting Equipment – All units shall ensure that each hand and semi-portable fire extinguisher, fixed fire-extinguishing system and gas detection system shall be tested and inspected annually in accordance with the requirements contained in 46 CFR 109.223. All required tests and inspections shall be documented.

h. Hospital Space, First Aid Kit & Litter – All units carrying 12 or more persons on a voyage, that is more than three days, shall have a dedicated hospital space on board that complies with 46 CFR 108.209 or 46 CFR 108.210. All units shall have a first aid kit that complies with 46 CFR 108.707, and a litter capable of being used on the type of helicopter that services the unit in accordance with the requirements of 46 CFR 108.709.

i. Hazardous Locations – All units shall comply with the electrical wiring materials and methods required by 46 CFR 111.60 for the hazardous locations listed in 46 CFR 111.105-33.

j. The OCMI may require a unit to carry specialized or additional equipment if the conditions, arrangement or service of the unit present uniquely hazardous circumstances that are not adequately addressed by existing requirements or standards.

E. STABILITY

A Load Line Certificate is NOT sufficient to verify adequate stability of a unit. Acceptance of stability will be based on one of the following criteria:

Review and approval of the stability calculations and data contained in the operating manual by the Marine Safety Center to the standards contained in 46 CFR Parts 170 and 174.

Examination of stability data contained in the operating manual accepted under full IMO MODU Code standards by the flag state. In cases when a unit's stability has been determined under less than full IMO criteria, a stability test may be required to verify lightship data. An operating manual not containing supporting calculations and inclining experiment/deadweight survey data, submitted to the Coast Guard for approval will be determined to be inadequate.

Examination of alternative stability criteria accepted by the flag state that provides an equivalent level of safety as permitted by Section 3.3.3 of the IMO MODU Code.

F. FOREIGN MODU OPERATING MANUALS

All foreign units should have operating manuals complying with the applicable provisions specified in 33 CFR 146.205. The unit's operating manual must be submitted to the cognizant OCMI for review. The contents of the manual must be in English in addition to any other languages understood by personnel routinely onboard.

No Coast Guard "approval" or "examined" stamps shall be applied to these manuals.

It should be noted that principal approval of the manual comes from the flag state or their designated representative. If an operations manual is not flag state approved, the Marine Inspector must issue a deficiency requiring Flag State approval of the manual within 30 days.

G. GENERAL SAFETY REQUIREMENTS

1. Workplace Safety

Owners and operators of all foreign flagged MODUs operating on the U.S. OCS are responsible for maintaining those units in compliance with workplace safety and health regulations and free from recognized hazards as specified in 33 CFR 142. The Coast Guard and OSHA share joint responsibility for the occupational safety and health of personnel on OCS facilities per an MOU signed in 1982. See MSM Vol II Section G, Chapter 1, Part D, for further discussion on the Coast Guard/OSHA MOU.

2. Drydock Examination/Special Exam in Lieu of Drydocking

In order to verify the unit’s structural integrity and continued compliance with the design standard as specified by 33 CFR 143.201 and .207, all MODUs should undergo a drydock or special exam at the following intervals:

(a) *Units applying for a COC under Option A* – Under current Coast Guard regulations, all other class of vessels require the twice in a five year interval for dry docking or special examination. Coast Guard guidance allows MODUs the same option with drydock examinations conducted in the presence of a Coast Guard inspector. These may be conducted at least twice within any 5-year period after issuance of a COI or COC with no more than 3 years elapsing between any two examinations. Documentation of recent drydock examinations or special exams in lieu of drydocking witnessed by classification societies recognized by the Coast Guard may be accepted.

(b) *Units applying for a COC under Option B* – Units must comply with the requirements of the flag state which have been determined by Commandant to provide a level of safety equivalent to those provided by U.S. requirements. Unit owners must present evidence to the satisfaction of the cognizant OCMI that a drydock examination or a special exam in lieu of drydock was conducted in accordance with the flag state's standards.

(c) *Units applying for a COC under Option C*- Evidence of full compliance with provisions of the IMO MODU Code pertaining to all required surveys must be presented to an accepted by the cognizant OCMI.

The Coast Guard will NOT normally conduct drydock examinations or special exams in lieu of drydocking on foreign units. However, if the unit's structural integrity is in question, the cognizant OCMI may require an examination to be conducted by the flag state with Coast Guard inspectors in attendance.

---

3. Cranes

All pedestal mounted revolving cranes must be in compliance with the design requirements and operating standards as outlined below:

a. *Units applying for a COC under Option A* – Cranes aboard units are to be inspected, tested and operated in compliance with the requirements contained in 46 CFR Parts 108 and 109.

b. *Units applying for a COC under Option B* – The cranes may be inspected, tested and operated in accordance with the flag state's standards for cranes if those standards are determined by Commandant to provide a level of safety generally equivalent to or greater than that provided in 46 CFR Parts 107, 108 and 109.

c. *Units applying for a COC under Option C* – The cranes should be inspected, tested and operated in accordance with Chapter 12 of the MODU Code. The unit owners should present evidence that the cranes have been examined and accepted by the flag state or its authorized representative within 12 months of the date of application for a COC.

All crane testing and inspections should be witnessed and conducted by the American Bureau of Shipping (ABS), Det Norske Veritas (DNV), or the International Cargo Gear Bureau, Inc. (ICGB) for cranes under certification by these organizations. Certification of cranes on units examined under Option A; should be conducted by a recognized organization (RO) or other authority designated by the flag state to conduct such testing and inspections.

4. Pressure Vessel Internal Exams

All Options - Regardless of which Option A, B, or C that an owner chooses for their MODU, the inspection frequency regulations contained 46 CFR 61.10 for pressure vessels apply.

Foreign flagged MODUs operating on the OCS shall have pressure vessels internally examined once every five years. In addition, all relief valves shall be tested twice in five years with no intervals more than three years. The only exception to this requirement is per 33 CFR 143.207 paragraph (b), Option B, where the accepted standard of a unit's flag state or documenting nation are more stringent.

It is the responsibility of the unit's owner to present sufficient documentation demonstrating such inspections and tests have been conducted and witnessed by authorized representatives within the specified intervals. If sufficient evidence is not available, they will need to be inspected or tested to the satisfaction of the cognizant OCMI prior to issuance of the COC. Marine Inspectors shall ensure that the internal exam and relief valve tests dates are documented in MISLE.

All fired and unfired pressure vessels should be designed, fabricated, and identified in accordance with the requirements of the ASME Code, the Coast Guard, or other authority recognized by the flag state. Additionally, each pressure vessel must have a relieving device set in accordance with the provisions contained in 46 CFR 54.15-5(c). Relief devices should be ASME Code stamped or built to an equivalent standard recognized by the flag state.

5. Lifesaving Appliances

All Options – To meet the compliance requirements for foreign MODUs, all units must be equipped with life saving appliances equal to or greater than the requirements of 46 CFR Subpart E. A unit in compliance with the 2009 MODU Code may be determined to be in compliance with these requirements.

a. All lifeboats on units must be approved survival craft constructed to comply with the provisions of SOLAS 74, Chapter III as amended, the IMO Lifesaving Appliances (LSA) Code, or have a Coast Guard approval in the 160.135 series.

b. All lifeboats must be equipped in accordance with the provisions of the IMO LSA Code or the provisions of 46 CFR Table 108.575(b).

c. All life rafts must be constructed and approved in accordance with the provisions of SOLAS 74, Chapter III, as amended by the IMO LSA Code, or have a Coast Guard approval in the 160.118 or 160.151 series.

d. Rigid life rafts must be equipped to the SOLAS A or B standard or to 46 CFR Table 108.575(b).

e. All units must provide life jackets in accordance with the IMO MODU Code or 46 CFR 108.580(b).

f. The units owners must present evidence acceptable to the OCMI that the lifesaving appliance launching devices were satisfactorily weight tested in accordance with the provisions of 46 CFR 109.301(i) within 12 months of the application for a COC. Additional weight tests of these devices will be required in accordance with 46 CFR 109.301(i).

g. All survival equipment locations shall be marked in accordance with SOLAS 74, Chapter III, Regulation 9. (NVIC 3-87) offers guidance for the types of placards.

---

6. Carriage of Exposure Suits

All Options – Foreign units on the U.S. OCS operating north of 32 degrees North latitude shall carry immersion suits approved meeting SOLAS 74, Chapter III, LSA Code or the. Coast Guard under approval series 160.171

---

7. Fire Safety

All Options – All fire extinguishing systems, fire extinguishers, fire detection systems and sprinkler systems are to be inspected annually. In absence of adequate documentation that such testing has been made by the flag state or its authorized representatives, testing will be required by the Coast Guard to the satisfaction of the cognizant OCMI. On all units where wood is utilized in construction of the accommodation spaces, each space must be equipped with a smoke or heat detector satisfactory to the cognizant OCMI.

---

8. Alarms, Remote Controls, and Other Safety Devices

All Options – The satisfactory operation of installed machinery and switchboard safety devices, all remote closures and shutdowns, and all alarms should be demonstrated at each examination for issuance of the COC.

9. Emergency Lighting Systems

All Options – An emergency lighting system capable of a minimum of 12 continuous hours of operation is to be installed in passageways, stairways, escape routes to lifesaving craft, galleys, pantries, emergency power rooms, mess rooms, recreation rooms, manned machinery spaces, and control rooms. Additional emergency lights should be installed to provide adequate illumination for the entire launching process of lifeboat/capsules and liferafts from the stowed position to the water. Relay controlled battery powered lanterns are acceptable for these purposes, and should be specifically required when a MODU is equipped with an emergency total rig shutdown system.

10. Helicopter Facilities

a. Helicopter facilities aboard all foreign MODUs are to meet one of the following standards including requirements for helicopter deck firefighting equipment and helicopter fueling facilities:

   (1) Option A – The requirements of 46 CFR Parts 108 and 109.

   (2) Option B – The requirements of the flag state if they, are accepted by COMDT and provide a level of safety equivalent to or exceeding those specified by 46 CFR Parts 108 and 109.

   (3) Option C – The requirements of the IMO MODU Code, Chapters 9 and 13.

b. Green Perimeter lights: The Coast Guard considers the helicopter lighting scheme of the 2009 MODU Code, Chapter 13 "perimeter lights" to be to be at least as effective as the requirements of 46 CFR 108.241. CG-ENG has documented the acceptance of the international "green light" scheme on foreign MODUs (see CG-ENG Policy Letter 02-12). An OCMI should use these CG-ENG policy letters as evidence of compliance for the purpose of issuing a COC to a MODU under 143.207; an individual waiver should not be required.

11. Navigation Lighting

MODUs are required to comply with the Navigation Rules. Per Navigation Rule 3 and as defined in 33 CFR 140.10. MODUs are vessels, and as such shall abide by the Navigation Rules and properly display navigation lights and shapes accordingly (i.e. Rules 22, 23(a), 27(d), etc.). MODUs, particularly when drilling, are also subject to other regulations denoted in Title 33 CFR, parts 67 and 140-147 (Subchapter N).

Note: A vessel being propelled by a dynamic positioning system (e.g. MODU) is considered underway even when hovering on location, but, may also be "restricted in her ability to maneuver" as defined by Navigation Rule 3 (International-Inland).

H. ACCEPTANCE OF FOREIGN EQUIPMENT

Where Coast Guard approved equipment is specifically required, foreign equipment may be accepted in accordance with the provisions of 33 CFR 140.15. The OCMI may require additional equipment as necessary to ensure that a general level of safety equivalent to 46 CFR 108 and 109 is maintained. To ensure a level of safety equal to or greater than required by U.S. regulations, any equipment specifically prohibited on U.S. units will be prohibited on foreign units.

I. FOREIGN FLAGGED UNITS STACKED OR LAID-UP ON THE OCS, CONTIGUOUS ZONE, OR TERRITORIAL WATERS

Foreign flagged units stacked or laid-up on the U.S. OCS, or contiguous zone or in territorial waters, should comply with applicable Coast Guard requirements applied to U.S. flag units when in this status. Owners and operators of foreign flagged units should contact the cognizant OCMI prior to stacking the unit in the aforementioned areas to discuss the applicable requirements. Owners and operators are further advised that should the units reside in U.S. state waters, they may be subject to additional requirements imposed by the cognizant state authorities.

J. CITIZENSHIP REQUIREMENTS

Prior to commencing drilling operations on the U.S. OCS, the owner/operator of a foreign flagged MODU shall ensure that the citizenship requirements set forth in 33 CFR 141, are met. Amplifying guidance for compliance with the aforementioned regulations can be found in NVIC 7-84.

K. EMERGENCY EVACUATION PLAN

All foreign units should have an approved Emergency Evacuation Plan (EEP) complying with the applicable provisions specified in 33 CFR 146.210. Prior to the initial COC, the EEP shall be submitted to the cognizant OCMI for review. The contents of the manual must be in English in addition to any other language understood by personnel routinely onboard. History has shown that emergency evacuations are required from time to time and a well thought out EEP can save lives.

L. COC: FAILURE TO MEET REQUIREMENTS

If at any time the OCMI determines the unit is NOT in compliance with the requirements for the purpose of obtaining a COC, regardless of the Option chosen, the Coast Guard may:

1. Withhold issuance of the original COC until the requirements are met;

2. Withhold issuance of a subsequent COC until the requirements are met;

3. Suspend an unexpired COC after a reinspection is initiated due to crew complaint or casualty investigation until requirements are met;

4. Revoke an unexpired COC after re-inspection if the unit operates without complying with Coast Guard orders to correct serious discrepancies or unlawful conditions; or

5. Initiate civil penalty procedures against the owner, operator, and/or person-in-charge if violations of 33 CFR 142.1 or other deficiencies remain uncorrected after official notification is given and a reasonable time for corrections expires.

   The Coast Guard **cannot detain** a MODU on the OCS, but when deciding whether deficiencies warrant a MI to withhold or revoke a COC, use the IMO Procedures for Port State Control (Resolution A.787(19) as amended by resolution A.882(21)) as (Appendix 1) guidance. In all instances where the COC is revoked or withheld, The Bureau of Safety and Environmental Enforcement (BSEE) shall be notified by the Coast Guard.

M. MARPOL ANNEX VI

This section clarifies exemptions on vessel emissions directly arising from the exploration, exploitation and associated offshore processing of sea-bed mineral resources. (MARPOL Annex Reg 3.3.1)

Note: MODUs do not have to comply with the Vessel General Permit unless they operate in covered waters (generally within the territorial sea).

1. Applicability

Fixed and floating drilling rigs and other platforms are required to comply with the provisions of MARPOL Annex VI, *Regulations for the Prevention of Air Pollution from Ships*. (Per Chapter 1, Reg 1, the provisions of this Annex shall apply to all ships, except where expressly provided by otherwise in regulations 3, 5, 6, 13, 15, 16, and 18 of this Annex.)

2. Definitions

For the purposes of this regulation, fixed and floating drilling rigs and other platforms means MODUs and FPSOs, involved in the exploration, exploitation and associated offshore processing of sea-bed mineral resources.

3. Inspections

Fixed and floating drilling rigs (ex. MODUs) and other platforms will be inspected for compliance with MARPOL Annex VI. Per Chapter 2, Regulation 5; every ship of 400 gross tonnage and above and every fixed and floating drilling rig and other platforms shall be subject to the surveys specified in this Annex.

4. Certificates

Fixed and floating MODUs and other platforms will receive an IAPP certificate. Per MARPOL Annex VI, Chapter 2, Regulation 6; an IAPP Certificate shall be issued, after an initial or renewal survey in accordance with the provisions of regulation 5 of this Annex, to platforms and drilling rigs **engaged in voyages to waters** under the sovereignty or jurisdiction of other Parties. Therefore a MODU (without DP) coming from Norway is required to have an IAPP and meet all applicable regulations while engaged in the voyage to U.S. waters. But, once it gets to the Gulf of Mexico and it begins drilling it is exempt from the following items in section 5 below.

5. Exceptions/Exemptions

Revised MARPOL Annex VI (2009 edition), Chapter 1, Regulation 3 allows for exceptions and exemptions. Specifically regulation 3.3.1: "Emissions from sea-bed mineral activities" - Emissions directly arising from the exploration, exploitation and associated offshore processing of sea-bed mineral resources are exempt from the provisions of this Annex.

Note: Emissions from marine diesel engines that are solely dedicated to the exploration, exploitation and associated offshore processing of sea-bed mineral resources *are* exempt from the MARPOL Annex VI regulations (see Reg 3 for list of exempted emissions).

Engines utilized for DP, ship service generators providing power for propulsion, navigation equipment, hotel services, etc. are **NOT** exempt from MARPOL Annex VI." One example might be a Cement Unit.

6. Underway

While a fixed or floating drilling rig or platform is underway and "**engaged in voyages to waters**", it and all vessels associated (as applicable) are required to meet the requirements of MARPOL Annex VI. Once the fixed or floating drilling rig or platform begins **exploration, exploitation and associated offshore processing** of sea-bed mineral resources, they are exempt from the MARPOL Annex VI regulations.

---

7. Vessels with Dynamic Positioning (DP)

The Coast Guard considers a vessel operating in DP mode to be a vessel propelled by mechanical means. Any vessel holding position solely through the use of its DP system is considered "underway" and cannot be considered "on location". "On location" means that a MODU is bottom bearing or moored with anchors placed in the drilling configuration. Per 46 CFR 10.107 "underway" is defined as when "a vessel is not at anchor, made fast to the shore, or aground." When referring to a MODU, underway means that the MODU is not in an on-location or laid-up status and includes that period of time when the MODU is deploying or recovering its mooring system. Because a MODU operating under DP is not at anchor, nor is it made fast to shore or the ocean bottom it is by definition "underway" and the equipment not directly associated with the **exploration, exploitation and associated offshore processing** of sea-bed mineral resources, (engines utilized for DP, Ships Generator utilized to operate navigation equipment, accommodations, etc…) a MODU cannot be exempted under Regulation 3 from the provisions of MARPOL Annex VI.

N. RISKED-BASED TARGETING OF FOREIGN FLAGGED MODUS

---

1. Introduction

This section provides procedures for risk-based targeting of foreign flagged Mobile Offshore Drilling Units (MODU) operating on the United States Outer Continental Shelf (OCS). For

general guidelines on required documentation of foreign flagged MODU examinations and how to enter activities in MISLE refer to MSM Vol II, Section G, Chapter 1.

Every foreign flagged MODU must meet the requirements of 33 CFR Subchapter N, Parts 143 and 146, and undergo a Coast Guard examination, to be issued a COC in accordance with 33 CFR 143.210 prior to engaging in OCS activities.

---

2. The Matrix

The *Mobile Offshore Drilling Unit (MODU) Safety and Environmental Protection Compliance Targeting Matrix* (located at the end of this Chapter) has been developed based on the *Port State Control Safety and Environmental Protection Compliance Targeting Matrix*; which has been successful in targeting substandard vessels for over 10 years. The matrix will enable the Coast Guard to rationally and systematically determine the probable risk posed by foreign flagged MODUs operating on the U.S. OCS.

(1) The first three columns/entities of the matrix remain the same with minor changes made to terminology specific to MODUs.

(2) These entities are: I) MODU Management (to include lease holder), II) Flag State and III) Recognized Organizations/ Classification Societies.

(3) If any of these entities fail to fully undertake their responsibilities for the safe operation of an associated foreign flagged MODU, then that MODU, based on its final targeting matrix score, may be identified as requiring more stringent Coast Guard oversight.

(4) Column IV takes into account the Coast Guard's 12 month-cumulative experience with a particular MODU.

(5) Finally, Column V applies points based on a MODUs propulsion type, design particulars, and or age. Targeting points will be assigned in each of the five columns, and then totaled for the final point score.

(6) A MODUs matrix point score will determine if it warrants additional oversight through more frequent Coast Guard examinations.

---

3. PROCEDURES

a. MODUs will be scored manually by each OCMI each time an Advanced Notice of Arrival (ANOA) is submitted on their behalf, which includes arrival on the U.S. OCS and movement between OCS blocks in accordance 33 CFR 147. The National Vessel

Movement Center (NVMC) will initially collect, review, and verify specific MODU information including MODU type and size, cargo, crew list, MODU management information, and security and safety compliance documentation, etc. The NVMC then makes the ANOA available to the National Maritime Intelligence -Integration Office (NMIO) and to the OCMI's through the Ship Arrival Notification System (SANS). The NVMC also makes the ANOA accessible through MISLE. The NMIO analyzes MODU owner, operator, charterer, crew composition, history, etc. to determine whether there is pertinent intelligence regarding the MODU. The NMIO will then issue a daily message for Vessels of Intelligence Interest (VOII).

b. The OCMI will prioritize and coordinate the examination of MODUs entering their AOR. The OCMI will review each MODU arrival in MISLE paying close attention to the MODU matrix score. The calculated score may be raised or lowered based on amplifying information available and at the discretion of the OCMI. The MISLE vessel arrivals screen must also be updated to record a MODUs arrival and departure from the AOR. After completing the above steps, the OCMI will create an inspection activity in MISLE for each MODU that requires an examination. A full tutorial on processing arrivals and scheduling exams for foreign vessel (same process for MODUs) arrivals can be accessed at http://mislenet.osc.uscg.mil/User_Guides/Tutorials/SchedForeignVsl_Arrvl.htm.

---

4. MODU Safety and Environmental Protection Compliance Targeting Matrix Scoring

a. Column I: Management. This column is based on Port State Control (PSC) or Comandant (CG-CVC) targeting. A targeted vessel management company includes any owner, operator, lessee, charterer, or managing operator whose vessels have been “detained” (since MODUs outside 12 NM cannot be “detained” this data will come from PSC detention information) or sustained major Coastal State control actions in the U.S. more than once within the previous 12 months under the provisions of an international Convention. (A major Coastal State control action would include non-issuance, revocation or suspension of a COC, SMS audit or based on a decision by Commandant (CG-CVC). Commandant (CG-CVC-2) will maintain a current listing of targeted ship management companies based on detention reports received from Coast Guard field units; this list is updated monthly. Commandant (CG-CVC-2) will remove a targeted management company once their vessels are associated with less than two detentions within a 12 month period.

(1) If the owner, lessee, managing operator, or charterer of a MODU is included on the current Targeted Vessel Management Company List provided by Commandant (CG-CVC-2), assign 5 points. Although listed in the same column the owner, lessee, managing operator, and charterer should be scored separately.

(2) The OCMI may assign a maximum total of 5 points for this column. Proceed to Column II.

b. Column II: Flag. A targeted Flag Administration is a country with a safety-related detention ratio exceeding the average safety detention ratio for all Flag Administration's with vessels operating in U.S. waters. This data is based on PSC and Coastal State figures.

(1) Commandant (CG-CVC-2) compiles a list consisting of targeted Flag Administrations on an annual basis for use with the *PSC Safety and Environmental Protection Compliance Targeting Matrix*. This list can be found on the Web, accessible at: http://www.uscg.mil/hq/cgcvc/cvc2/safety.asp

(2) The OCMI assigns either 7 points or 2 points to vessels registered with a targeted Flag Administration in Column II of the *PSC Safety and Environmental Protection Compliance Targeting Matrix*. The list provided on the Web, lists the number of points applicable to the various targeted Flag Administrations. This list is accessible at: http://www.uscg.mil/hq/cgcvc/cvc2/safety.asp

c. Column III: Recognized Organization. Commandant (CG-CVC-2) evaluates Recognized Organizations (ROs) based on their performance over the previous three years (based on PSC and Coastal State data).

(1) If they have a 3-year safety detention ratio that exceeds the fixed 3-year safety detention ratio (0.5%), then that Organization will receive points.

(2) The Targeted Organization List contains the names of ROs that will receive points on the *MODU Safety and Environmental Protection Compliance Targeting Matrix*. This list is accessible at http://homeport.uscg.mil/mycg/portal/ep/browse.do?channelId=-18371. Table 1 below, shows the RO detention ratio and the matrix points that should be assigned based on PSC and Coastal state data collected.

(5) Check the vessel's RO against the current targeted list. If the list shows the RO as being targeted assign the appropriate number of points as indicated. See http://homeport.uscg.mil/mycg/portal/ep/browse.do?channelId=-18371.

d. Column IV: Vessel History.

(1) If MISLE data indicates the Coast Guard has not performed a COC exam in the past 12 months or the MODU has never been to the United States, then assign PRIORITY status. If the OCMI determines, after the initial exam and issuance of the COC, that the MODU meets all applicable safety requirements then they may

"downgrade" the MODU to Non-Priority, eliminating the six month examination requirement. (See section 5, below, for more details on the six month exam.)

(2) If MISLE data indicates that the MODU has been the subject of an exam resulting in non-issuance of a COC within the past 12 months, assign 5 points for each occurrence. Commandant (CG-CVC-2) will enter an inspection note after reviewing reports received from field units. This notice will assist in identifying MODUs not receiving their COC during the inspectors initial examination within the previous 12 months, *but may not include very recent examinations*. Field units must check the MISLE Vessel Critical Profile to determine whether any recent exams resulting in non-issuance of a COC have occurred.

(3) If MISLE data indicates that the MODU has been the subject of any other form of operational control within the past 12 months (i.e., COC suspension, COTP Order, Letter of Deviation, etc.), assign 1 point for each incident. Do not assign multiple points if the field unit took more than one control action for a single incident.

(4) If MISLE data indicates that the MODU has been involved in a reportable marine casualty or pollution case, as defined in 33 CFR 140.201, within the past 12 months, assign 1 point for each case.

(5) If MISLE data indicates that the MODU has been the subject of a marine violation, except for pollution, within the past 12 months, assign 1 point for each violation case.

(6) If MISLE data indicates the MODU has an outstanding deficiency which was not satisfactorily corrected by the required due date, assign 1 point each. The total points in Column IV are unlimited.

e. Column V: MODU Particulars. For purposes of this matrix the following definitions and points apply. MODU details should be verified through Class and/or International documents and entered in vessel particulars in MISLE.

(1) Self-Propelled (propelled by mechanical means) – MODU has propulsion machinery (including a Dynamic Positioning system) that provides for independent underway navigation. Assign 5 points.

(2) Semi-Submersible – a column stabilized MODU designed for offshore operations; either afloat or supported by the sea bed. Assign 3 points.

(3) Jack-Up (self-elevating unit) – a MODU with movable legs capable of raising its hull above the surface of the sea. The hull has sufficient buoyancy to transport the unit to the desired location. Once on location, the hull is raised to a predetermined

elevation above the sea surface on its legs, which are supported by the sea bed. The legs of such units may be designed to penetrate the bed, may be fitted with enlarged sections or footings, or may be attached to a bottom mat. Assign 2 points.

(4) Submersible – a column stabilized MODU designed for offshore operations solely when supported by the sea bed. Assign 1 point.

(5) Age – delivery date of the MODU shall be used for age determination. Assign the following points based on age: 0-4 years (subtract 3 points), 5-9 years (subtract 2 points), 10-14 years (add 0 points), 15-19 years (add 3 points), 20-24 years (add 5 points), and 25+ years (add 7 points).

f. Total Targeting Matrix Score/Priority Assignment.

(1) 12 or more points = Priority MODU

(2) 11 or fewer = Non-Priority MODU

---

5. Targeting Decision and Examination Frequency

The *MODU Safety and Environmental Protection Compliance Targeting Matrix* evaluates a vessel's relative risk of non-compliance with maritime safety standards and results in the assignment of points. Each matrix will provide a total that corresponds to the designations of Priority or Non-Priority.

OCMIs should consider placing Priority MODUs on a 6 month exam schedule and/ or increasing scope of regular COC exam as resources allow.

---

6. Priority Downgrade Clause

If a MODU has undergone a satisfactory annual exam within the past 6 months with no serious deficiencies, and all of the deficiencies issued during the exam have been corrected to the Coast Guard's satisfaction, the OCMI may downgrade the MODU to Non-Priority. If the exam priority of a MODU is downgraded to Non-Priority, it shall be added to the unit's pool of potential random examinations.

7. Stacked MODUs

Upon receiving notification, either through ANOA or otherwise, that a MODU will be or has been in a "stacked" condition, the OCMI will contact the owner/operator to advise them on the provisions contained in this Manual, Section G, Chapter 3: MODUs in layup status and Drydock exam extensions

8. Random Examinations

Units will conduct additional random examinations on 10% of their entire (priority and non-priority) fleet. For example, if a unit has 25 foreign flag MODUs operating in their zone then they should aim for conducting an additional 2 -3 MODU examinations annually as unit resources allow. For information on how to document this type of activity in MISLE see MISLE Management System (MMS) Work Instruction – MISLE Data Entry Requirements for Outer Continental Shelf (OCS) Inspections.

9. Documentation of Foreign-Flagged MODU Exam Activities

a. MISLE. All units conducting foreign-flagged MODU exams must use the MISLE MMS Work Instructions, MISLE Data Entry Requirements for OCS Inspections and MISLE Data Entry Requirements for Foreign Vessel Arrivals, Examinations and Operational Controls to accurately document MODU exams/activities within MISLE. To enable the proper use of the MODU Safety and Environmental Protection Compliance Targeting Matrix, it is of paramount importance every unit responsible for conducting foreign-flagged MODUs accurately document all MODU exam information and enter this data in MISLE in accordance with this policy and the MMS Work Instruction – MISLE Data Entry Requirements for OCS Inspections. Of particular note - units must enter all exam deficiencies, including those cleared on-site, into the MISLE activity. Deficiency MISLE entry must include the applicable regulatory cite the deficiency is based on and the date for required correction, or date it was corrected if corrected on the spot.

b. Reports of Inspection (Forms A and B). For COC's issued to a foreign vessel within U.S. territorial waters (inside 12 nm), the process remains relatively unchanged. A valid COC form will be issued and the examination record section completed. The Coast Guard Marine Inspector (MI) or Port State Control Officer (PSCO) shall continue to issue a Port State Control Report of Inspection, Form A, documenting the examination and a Form B, detailing any discrepancies identified during the exam. If no deficiencies are identified, a Form B will not be issued and a simple statement of

no deficiencies issued will be entered in the examination record section. The deficiency report contained within the new COC form will not be utilized during these exams (within 12 nm). Port State "control action" codes (detention, prior to departure, etc.) located at the bottom of the Form B, remains the appropriate means to document actions taken for an examination conducted inside U.S. territorial waters (within 12 nm).

c. Certifictae of Compliance, Form CG-3585. For COC's issued to a foreign vessel beyond U.S. territorial waters (outside 12 nm), the Coast Guard MI/PSCO shall issue a valid COC form, complete the examination record section and utilize the deficiency report for deficiencies identified in lieu of the U.S. Coast Guard Port State Control Report of Inspection Form A, Form CG-5437A and U.S. Coast Guard Port State Control Report of Inspection Form B, Form CG-5437B. To clarify, the deficiency report shall be used to document deficiencies identified during COC exams occurring overseas, in lightering zones, and on the OCS (exams occurring outside 12 nm). The deficiency report is very similar to the U.S. Coast Guard Port State Control Report of Inspection Form B, Form CG-5437B and instructions for its use are located on the "Instructions/Notices" page of the updated COC form. If no deficiencies are identified, the deficiency report will not be utilized and a simple statement of "no deficiencies issued" will be entered in the examination record section. Additionally, due to the unique nature of MODUs and FI's, three new "Action Codes" have been added to the Deficiency Report (which is not included on the U.S. Coast Guard Port State Control Report of Inspection Form B, Form CG-5437B): Code 66 - Rectify deficiency prior to drilling operations (issue to units who have not yet commenced drilling ops), Code 67 - Rectify deficiency prior to continuing drilling operations (issued to units who have had to cease drilling ops in order to rectify defs), and Code 34 - Operations Restricted. The Coast Guard does not have the authority to invoke an IMO detention on a vessel outside 12 nm. Therefore, other operational controls may be utilized under existing COTP authority which may include not issuing, suspending or invalidating the COC.

d. Issuance of COC. Once the Marine Inspector determines the foreign-flagged MODU is fit for its intended service, a Certificate of Compliance, Form CG-3585, will be issued. The MODU particulars must be indicated in the applicable section on the form.

e. Endorsement of COC. During the foreign-flagged MODUs required annual exam, once the Marine Inspector determines the unit to be fit for its intended service, the Certificate of Compliance, Form CG-3585, will be dated and endorsed with the attending Marine Inspector's signature in the appropriate block on page 1 of the form.

f. Non-issuance/revocation of a Certifictae of Compliance, Form CG-3585. Coast Guard units will notify Commandant (CG-CVC-2) via email (CGCVC@uscg.mil) when it is determined that a foreign-flagged MODU does not or no longer meets the

applicable safety requirements warranting issuance of a Certifictae of Compliance, Form CG-3585, either during the required annual exam or deficiency check, etc. Commandant (CG-CVC-2) will enter a special note in MISLE regarding the specific deficiencies identified during the exam, and the reason for non-issuance or revocation of the COC. This special note will remain "active" and be reflected on the MODUs critical profile for a period of five years. The email to Commandant (CG-CVC-2) should include, at a minimum, name of MODU, official number or IMO number, and MISLE activity number. Units should also scan the Certifictae of Compliance, Form CG-3585 and deficiency report forms into MISLE and attach them to the activity.

g. Access Control and Closure of Activities. A 2011 Office of the Inspector General (OIG) audit revealed that MISLE lacks sufficient internal controls to ensure accuracy and validity of data entered. To address this issue, Chiefs of the Inspection Division (CID) will review each activity for accuracy and compliance with Commandant, District and local unit administrative policies. Following appropriate review, CID's (or their representative) may close each activity.

h. Continuous Improvement. Industry members and OCMIs are encouraged to provide suggestions and feedback on MODU risked-based targeting via email to CGCVC@uscg.mil.

10. MODU Matrix

Downgrade Clause. If a MODU has undergone a Coast Guard Certificate of Compliance (COC) or a required COC annual exam within the past 6 months with no serious deficiencies, the OCMI may downgrade the MODU to non-priority. If the OCMI downgrades a MODU exam priority, it will be added to the pool of random examinations.

Priority MODU

12 or more points on the Matrix; MODUs involved in a marine casualty that may have affected seaworthiness; Coast Guard Officer in Charge, Marine Inspection (OCMI) determines a MODU to be a potential hazard to the OCS, port or the environment; MODUs whose Recognized Organization (classification society) has a detention ratio equal to or greater than 2%. Port or OCS entry may be restricted until the Coast Guard examines the MODU.

Non-Priority MODU

11 or fewer points on the Matrix. MODU poses a low safety and environmental risk. The Coast Guard may select and examine MODU using a random selection process.

TABLE OF CONTENTS

A. Introduction **G4-2**

B. Plans **G4-2**

C. Standards **G4-2**

D. Drydock Exam Requirements **G4-3**

E. Additional Requirements for Stowage of Oil in Bulk **G4-4**

F. Conversions **G4-4**

G. Guardrails **G4-4**

H. Helicopter Facilities **G4-5**

I. Hose reels with non-collapsible hard-rubber fire hoses **G4-5**

J. In Service Inspection Plans (ISIP) **G4-7**
1. Introduction G4-7
2. Approval G4-7
3. The Plan G4-8
4. The Inspection Process G4-9
5. Facilities 15 Years of Age and Older G4-12
6. Survey Procedures G4-12
7. In Service Inspection program (ISIP) Plan – Organization G4-13

A. INTRODUCTION

The term floating OCS facility means a buoyant OCS facility securely and substantially moored so that it cannot be moved without special effort. . A floating facility maintains a fixed location over the Outer Continental Shelf (OCS), through moorings, and may be attached to the subsoil or seabed by flow-lines, umbilicals, or similar connectors. This term includes, but is not limited to floating production systems (FPS), floating production storage and offloading systems (FPSO), floating storage and offloading systems (FSO), semi-submersible and tanker conversions, tension leg platforms (TLP's), SPARs and other similar types of installations or devices. The term floating facility does not include mobile offshore drilling units (MODUs) and other vessels.

The authority to inspect all facilities on the OCS comes from the Outer Continental Lands Act (OCSLA), 43 U.S.C. 1333 (d) (1), 1348 (c) and 1356. The inspection and examination of these facilities is covered in the Memorandum of Agreement (MOA) OCS-04 between the Minerals Management Service (MMS), now referred to as the Bureau of Safety and Environmental Enforcement (BSEE), and the Coast Guard, dated 28 February 2008, (still current, but under revision))to determine system jurisdiction and the application of appropriate inspection regulations, both during construction and following installation. On October 1, 2011, the Bureau of Ocean Energy Management, Regulation and Enforcement (BOEMRE), formerly the Minerals Management Service (MMS), was replaced by the Bureau of Ocean Energy Management (BOEM) and BSEE as part of a major reorganization.

Before construction is started on a proposed OCS facility of novel design or contains unusual equipment, the owner or operator must submit to Commandant (CG-ENG) for review plans and information for approval and issuance of design basis agreement.

B. PLANS

The owner/operator of each floating facility must submit plans to the Coast Guard for approval in accordance with 46 CFR 107, Subpart C, as related to the facility. If construction of the facility is initiated prior to Coast Guard plan review and approval, discrepancies may require correction prior to placing the facility in operation.

C. STANDARDS

Each OCS floating facility must comply with following requirements:

1. 46 CFR Subchapter F, Marine Engineering.

2. 46 CFR Subchapter J, Electrical Engineering.

3. 46 CFR Subchapter I-A, Part 107, Subpart C Plan Review.

4. 46 CFR Subchapter I-A, Part 108, Design and Equipment.

5. 33 CFR Part 67, Aids to Navigation on Artificial Islands and Fixed Structures.

6. 33 CFR Subchapter O, Pollution.

7. 33 CFR Subchapter N, Outer Continental Shelf Activities.

Once a facility meets the requirements found in this section, the cognizant OCMI will issue a Certificate of Inspection (COI) or a Certificate of Compliance (COC) to the facility depending on the documenting nation.

As an alternative, units may meet the alternative design and equipment standards for FOI and FPSO units on the U.S. OCS outlined in CG-ENG Policy Letter No. 01-13 dated 26 June 2013. The Coast Guard has determined that the standards in this letter provide a level of safety comparable to or greater than required by 33 CFR 140.120(b).

D. DRYDOCK EXAM REQUIREMENTS

Each floating OCS facility must undergo a satisfactory drydock examination in the presence of a Coast Guard marine inspector prior to initial certification. Thereafter, the facility must be examined to the satisfaction of the cognizant OCMI, in accordance with its drydocking plan.

---

1. Except as provided in paragraphs below, each floating facility must undergo an examination, at least twice within any 5-year period. No more than 3 years may elapse between any two examinations.

2. The owner or operator of a floating facility may request to the cognizant OCMI, to have an In Service Inspection Plan (ISIP) or an underwater survey in lieu of drydock (UWILD) instead of alternative drydock examinations.

3. The OCMI is responsible for administering and enforcing the drydock requirements applicable to the facility within his or her jurisdiction. In carrying out these responsibilities, the OCMI may delegate this authority to a classification society which is authorized to conduct inspections for a floating facility on behalf the Coast Guard per 46

CFR Part 8. The Coast Guard must be present for a minimum of 10% of these examinations.

E. ADDITIONAL REQUIREMENTS FOR STOWAGE OF OIL IN BULK

A floating production facility that is also used for storage of oil in bulk will be considered a tank vessel and should comply with the regulations below.

1. 46 CFR Subchapter D, Tank Vessels.

2. 33 CFR Part 157, Rules for the Protection of the Marine Environment Relating to Tank Vessels Carrying Oil in Bulk.

F. CONVERSIONS

When an existing ship, tankship, or tank barge is converted to a FPSO unit, the Marine Safety Center must determine on a case by case basis if the conversion is considered major and if OPA 90 requirements are applicable (e.g. tank access requirements).

G. GUARDRAILS

1. 33 CFR Subchapter 143.110 requires a 42 inch top rail height for guardrails protecting the perimeter and all openings on the decks of OCS facilities except MODUs. This type of rail is typical of a vessel rail with a greater top rail height to prevent a person from falling over. This requirement further directs designers and operators of floating facilities to design criteria found in 46 CFR 108. 46 CFR 108.217 requires a 39.37 inch (or 1 meter) top rail height for guardrails protecting the perimeter and all openings on the deck. This type of rail is more typical of a “vessel” rail with multiple courses to inhibit a person from washing through in a greenwater event.

2. Given the height of the decks on a floating facility (other than ship shape) and the motion dampening abilities of floating facilities to date, the possibility of a greenwater event occurring while personnel are onboard is remote and the rail height found in 33 CFR 143.110 (42”), provides a higher level of safety for the most likely event that could occur, falling over versus washing through.

3. Floating facilities are permitted to install either of the guardrail designs described above, provided that all rails throughout the entire facility on all deck perimeters and openings

are identical. Exception is made for the landing areas associate with stacked modular portable quarters. Here they must meet 46 CFR 108.217 (39”), because they are so frequently interchanged and deployed onboard conventional MODUs.

4. Removable guardrails may be installed where operating conditions warrant their use. Due to the absence of adverse movements in floating facilities (other than ship shape) hull designs, designers and operators need not comply with the internal storm rail requirements of 46 CFR 108.221 (b) and (c). Operators are still required to comply with the external storm rail requirements of 46 CFR 108.221 (a).

5. This direction on guardrail heights does NOT apply to floating facilities with conventional ship-shaped hulls.

H. HELICOPTER FACILITIES

The Coast Guard considers the helicopter lighting scheme of the 2009 MODU Code, Chapter 13 "perimeter lights" to be to be at least as effective as the requirements of 46 CFR 108.241. CG-ENG has documented the acceptance of the international "green light" scheme on floating OCS facilities (see CG-ENG Policy Letter 01-13). An OCMI may use this CG-ENG policy letter as evidence of compliance for the purpose of issuing a COC to a foreign flag floating OCS facility; an individual waiver should not be required.

I. HOSE REELS WITH NON-COLLAPSIBLE HARD-RUBBER FIRE HOSES

Commandant (CG-ENG-4) has approved certain hose reels for use on floating facilities (other than ship shape and MODUs). These hose reels are required to be outfitted with non-collapsible hard-rubber hoses that meet Standard 92 of the Underwriters Laboratories, Inc. or Military Specification H24580. These hoses may be used on floating facilities as a substitute to the required collapsible fire hose, subject to the following conditions:

---

1. They may be installed only on open decks; or inside columns, pontoons, and machinery spaces as long as there is adequate room to unreel the hose to its full length.

2. Hydrants with collapsible “UL-19” hoses should be installed inside the accommodation spaces for immediate access by the crew. However, if there are no fire hydrants installed inside the accommodation spaces, all of the following conditions must be met:

   (a) The accommodation module cannot be longer than 70 feet in length and 40 feet in width. These dimensions may be further limited based on the “coverage” requirements of paragraph 3 (below) if there are obstructions (hallways and

secondary rooms) inside the accommodation module.

(b) Coast Guard marine inspectors, during annual inspection, shall randomly select permanently-assigned floating facility personnel not normally part of a fire fighting team, and verify that they are familiar with the location of all firefighting equipment; specifically, the location of the external hose stations that are to be used for internal spaces.

3. All fire hydrants (with collapsible or non-collapsible hoses) must meet the following "coverage" requirements per 46 CFR 108.423.

   (a) Fire hydrants with collapsible or non-collapsible hoses must be able to spray each accessible space with at least two effective spray patterns of water from separate hydrants.

   (b) In all internal and external spaces, other than the main machinery space, at least one spray pattern of water must be from a single length (50 feet) hose. If the hose is over 50 feet in length, then only the first 50 feet of one hose at the hydrant may be used for determining coverage. The length of the second hose is unrestricted, as long as minimum nozzle pressure of 50 psi can be provided with both hoses flowing.

   (c) In the machinery space both spray patterns of water must be from a single length (50 feet) hose. If the hose is over 50 feet in length, then only the first 50 feet of one hose at the hydrant may be used for determining coverage.

   (d) NVIC 6-72 allows for an effective spray pattern of about 20-25 feet in still air.

4. Hose reels with non-collapsible hard rubber hoses that do not meet Standard 92 of the Underwriters Laboratories, Inc. or Military Specification H24580 currently installed onboard existing floating facilities (other than ship shape), must obtain specific approval from Commandant (CG-ENG-4).

5. Replacement of only the non-approved fire hoses is acceptable. Replacement of the whole firefighting system with appurtenances is not required. However, the nozzles must be Coast Guard approved and compatible with the system. The type of nozzle to be installed can normally be found on the Coast Guard type-approval certificate for the hose.

J. IN SERVICE INSPECTION PLANS (ISIP)

1. Introduction

a. There are, and continue to be, unique and unconventional floating facilities being constructed to work in the OCS that are not fully addressed by the MODU drydocking regulations referenced by 33 CFR 143.120. Facilities, such as semi-submersibles, TLP's, mini-TLP's and various SPAR and FPSO designs, are characterized by their large size, ability to exceed the capacities of most drydocks, and a tendency to remain permanently located on a fixed mooring for the life of the facility. Drydocking cycles are complex, if not impossible, and the ISIP program was introduced with these types of facilities in mind.

b. Companies operating one of these facilities must ensure that a customized and approved ISIP Plan is developed. The ISIP must address the hull (internal and external) inspection intervals, taking into account the unique structures of these units. 33 CFR 143.120, Floating OCS Facilities, refers to 46 CFR 107.261 and .265 for drydock inspection requirements. 33 CFR 143.120 also provides for equivalences when appropriate and is the basis for authorizing floating facilities to participate in the ISIP to meet drydocking requirements.

c. The following guidelines provide consistency for the drydocking requirements of floating facilities while maintaining the authority of the OCMIs to modify inspection intervals as necessary to address the uniqueness of each facility.

2. Approval

a. Companies requesting to use this program should develop their ISIP Plans, for submittal to the OCMI of the zone that a facility will initially be operating, per 33 CFR 143.120, requiring floating OCS facilities to submit plans per 46 CFR 107 subpart C: The requirements of the ISIP Plan draw heavily from NVIC 1-89 Underwater Survey Guidance, as modified by the comments in Section 4 (the Inspection Process) of this subpart.

b. Companies requesting to use the ISIP should submit their plans a minimum of 90 days prior to entry of the facility into service, to the Officer in Charge, Marine Inspections (OCMI) of the zone that the facility will initially be operating.

c. OCMI's may seek additional guidance from the appropriate district office and/or Commandant (CG-CVC-2), as necessary.

---

3. The Plan

a. The ISIP Plan is a two-part document that addresses prescriptive and operational considerations, as well as provides plans that identify the crucial/high stress inspection points.

(1) The Operational Procedures and Requirements section of the ISIP Plan will be reviewed by the cognizant OCMI.

(2) The Structural Critical Inspection Points (SCIP) section of the ISIP Plan must include an explanation as to why a section/area is designated as a SCIP and must be reviewed by the facilities classification society.

(a) In the event the structure is not under classification, the Coast Guard Marine Safety Center (MSC) will conduct the review of the SCIP section of the ISIP and MSC must include an explanation as to why the area is being designated as such.

(b) Submissions for review by the MSC should be submitted a minimum of 90 days prior to entry of the facility into service, which is the date the Certificate of Inspection, is issued and usually the date of "first oil".

(c) Upon completion of their review, the Classification Society (or Recognized Organization (RO)) or MSC shall provide a statement saying: "This plan has been reviewed and appropriately identifies all crucial and high stress areas to be inspected."

b. The ISIP plan should be approved prior to the initiation of operations by the floating facility. Plans that were approved prior to 11 February 2003, (the original date of the Commandant (CG-MOC-2) Policy Letter 03-01, which initiated the implementation date), may continue to be used unless a situation occurs (such as excessive wastage, cracking, etc.) that results in the OCMI determining that the plan should be reviewed and modifications required. Subsequent changes and modification to plans with approval dates prior to Feb 11, 2003, are required to meet the provision of this section.

4. The Inspection Process

The following areas are specific to the ISIP program and represent a deviation from the UWILD program

a. Prior to entry into the ISIP Program:

(1) Since TLPs and SPARs are typically too large to examine in drydock, a full assessment of the hull structure shall be made prior to initial placement of it, or its section, into the water.

(2) As listed in NVIC 1-89, a full video survey of the condition of the hull or its parts shall be made for future reference purposes.

(3) Notifications of the major events surrounding the construction and launching of the facilities hull shall be made to the OCMI of the zone in which the facility will initially be operating; providing ample opportunity for Marine Inspectors to examine and document the initial condition of the hull.

b. Inspection Cycles.

(1) If the facility class is of a novel to unconventional design, a 40% annual inspection cycle (equivalent to twice in 5 years) must be used for the first five years of the OCS facilities service life.

(2) After five years, if there have been no major issues; the OCMI may consider allowing a Modified Inspection schedule, “once in five year” (20% annually) cycle.

(3) A facility class is considered novel or unconventional if:

(a) There is no known facility of similar design on the U.S. OCS; and

(b) There is no design standard (i.e. Coast Guard regulations, classification society rules accepted by the Coast Guard, or industry standards accepted by the Coast Guard) on the facility.

(4) The decision to allow a facility to be placed in an alternative inspection program should be based on the results of previous exams of similar facilities, the quality of the operating company’s previous inspections for other facilities and any unique operating conditions of the facility. The company should have a

satisfactory history of operating floating OCS facilities for at least 5 years. They should be proactive in their preventative maintenance program and are encouraged to meet some type of quality certification program. Additionally, if the facility experiences a significant fractures or hull degradation during the initial cycle, the OCMI may require a more stringent inspection schedule or return to the equipment schedule in 4.b (1) above.

(5) Under the 40% annual inspection cycle it is acceptable for a company to inspect 100% of the hull every 2-1/2 years vs. 40% every year.

(6) For Facilities on the Modified Inspection Program (20% annual inspection cycle which is equivalent to once- in-5 years), companies may elect to inspect 50% of the hull every 2-1/2 years vs. 20% every year.

(7) ISIP Inspection Intervals:

	Interval or…	**Alternative Option**	**Inspection Cycle**
Internals (Internal; Structural Exam)	40% Annually	100% @ 2-1/2 yrs	Twice-in-5 yrs
Externals: (Underwater Survey)	40% Annually	100% @ 2-1/2 yrs	Twice-in-5 yrs

As an option for floating OCS facilities built and inspected in quadrants, the following options may apply:

	Interval or…	**Alternative Option**	**Inspection Cycle**
Internals (Internal; Structural Exam)	2 quadrants every 15 months (40% annually)	4 quadrants @ 2-1/2 yrs	Twice-in-5 yrs
Externals: (Underwater Surveys)	40% annually	100% @ 2-1/2 yrs	Twice-in-5 yrs

(8) For qualifying floating OCS facilities, the OCMI may approve an ISIP with this "modified inspection program".

	Interval or…	**Alternative Option**	**Inspection Cycle**
Internals (Internal; Structural Exam)	20% annually	50% @ 2-1/2 yrs	Once-in-5 yrs
Externals: (Underwater Surveys)	20% annually	50% @ 2-1/2 yrs	Once-in-5 yrs

As an option for floating OCS facilities built and inspected in quadrants, the following options may apply:

	Interval or…	**Alternative Option**	**Inspection Cycle**
Internals (Internal; Structural Exam)	1 quadrant every 15 months (20% annually)	2 quadrants @ 2-1/2 yrs	Once-in-5 yrs
Externals: (Underwater Surveys)	20% annually	50% @ 2-1/2 yrs	Once-in-5 yrs

c. Inspection Procedures.

(1) In any of the cases above, the examination must be conducted within 2-3 years of the last exam and no more than 5 years may elapse from the previous.

(2) For those facilities placed on the Modified Inspection Program, the internal structural examination shall be conducted on a different portion of the internal areas of the facilities external hull.

(3) The remaining portions of the internal structure and outer hull must then be completed over the next 2.5 years resulting in a complete internal and external exam by the end of a 5 year period.

(4) The underwater examination of the external hull shall include all applicable sea valves, sea chests, cathodic protection, and special examinations of critical structures which have been designated in the approved ISIP plan.

(5) During each hull examination under both the “twice in five year” and the “once in 5 year” cycles, the internal hull exams shall be conducted at different areas from the external hull exam. For example, if an internal exam is conducted in one quadrant, the external exam should be conducted in a different quadrant. However, if fractures, flaws, or corrosion is noted on one side (on the interior or exterior) of the hull plating, the other side of the plating should be examined.

---

5. Facilities 15 Years of Age and Older

a. After 15 years of age, the hull inspection intervals will return to the full requirement of both internal and external examinations required twice in 5 years, unless the companies requests and is granted an extension from the cognizant OCMI.

b. In considering an extension of the modified inspection program, the OCMI shall consider:

(1) the change in condition of the hull from the initial underwater surveys to the most recent survey (gauging report as detailed in Section 3 of NVIC 1-89 may be accepted to assess condition);

(2) the repair frequency of critical areas; and

(3) coating and condition of internal tanks and voids.

c. Based on this and any additional information, the OCMI may extend the ISIP for this floating facility 5 or 10 additional years.

d. The owner must request a new extension at the conclusion of each OCMI approved extension to continue the intervals listed in 4.b (1) or (2) on page G4-9.

---

6. Survey Procedures

a. The majority of facilities will not be capable of increasing freeboard for visual inspection of the hull, through reduction of ballast. Where a facility cannot practically “light ballast” such as a TLP or SPAR, it may remain at operating drafts for the survey.

b. Though these floating facilities are designed to survive extreme weather situations, such as hurricanes, they do not have the ability to relocate or change their heading as a vessel would to confront adverse weather conditions. For information on Post Hurricane Inspection procedures see Chapter 1 Part I, of this Section.

c. Inspection of the internal and external parts of the hull shall be conducted as per the ISIP Plan to the satisfaction of the attending marine inspector in order for the company to receive credit for the examination. Third party inspectors are not to be used as a replacement for the CG Inspector; however they may be utilized to augment the marine inspector and perform specialized inspection tasks such as nondestructive testing (NDT).

d. The scheduling of the hull examination and other required inspections (i.e. Inspections for Certification and Annual Inspections) must be coordinated so that marine inspector attendance is required no more than once per year, unless specifically approved by the OCMI.

---

7. In Service Inspection program (ISIP) Plan – Organization

a. Below is an outline of the ISIP plan and how it should be organized when it is submitted for approval/review.

b. This ISIP organization shall be followed in development if new ISIP's. Companies may add additional sections or make minor deviations from the outline structure below, as long as the minimum contents have been included and basic outline adhered to. Companies may also include large tables and procedural lists as appendixes that are referenced from within the main document.

c. ISIP's that have been approved prior to Feb 11, 2003, may retain their original formatting. However, format revision must follow the new guidance below.

Table of Contents

I. Introduction

A. General Description

B. Regulatory compliance, standards and interface with regulators

C. Nomenclature

D. References

II. Operational Procedures and Requirements

A. Inspection Procedures

1. Description of underwater body inspections and internal structural inspection. NVIC 1-89 (as modified by this Section) should be consulted in development of this section.

2. Detailed scope of individual inspection types that may potentially be employed such as hull gauging, ROV operations, tank entry, NDT, and visual inspections.

3. Special inspection techniques, interval and procedures for those crucial/high stress locations.

4. Discussion of general dive operations, safety standards and interaction with diving contractors.

5. Procedural checklists for each operation.

6. The inspection technique for inspecting the shell plating from the inside.

7. The inspection technique for inspecting the underwater portion of the hull.

B. Inspection Schedule and Frequency

1. Outline of general inspection schedule and frequency as required. This should discuss high level scheduling and complement the detailed inspection cycle as for completion listed in Section C.

2. The extent of each annual inspection and the areas to be inspected for the lifetime of the facility at the intended site.

C. Facility Component Identification

1. General description of facility including listing of measurements and particulars.

2. Hull description. Description of hull and special features including general discussion of scantlings and areas of high stress concerns (inspection cycles and general inspection procedures).

3. Structural Critical Inspection Points. General discussion of types of areas that are considered critical and types of inspections. Reference details in Section III of this document (page 4-15) for all specifics.

4. Sea chest and sea valves. (Listing, details, inspection cycles, general inspection procedure.) The method to blank/plug and remove each sea valve during each 5-year period. The method to ensure operability of each sea valve and to externally examine all sea chests/valves for deterioration and marine growth during each 2-1/2 year period.

5. Cathodic protection systems and anodes. This section should include listing, details, inspection cycles & general inspection procedure for cathodic protection systems and anodes.

6. Accessible compartments and voids. These sections should include listing, details, inspection cycles, general inspection procedures for accessible compartments and voids.

7. In accessible compartments and voids. This section should include listing, precise location, details, inspection cycles, general inspection procedures and provisions taken to ensure continued integrity of the in accessible compartments and voids.)

D. Reporting and Documentation

1. General record keeping procedures for reports and surveys (company policy).

2. Notification and report delivery procedures involving the classification society and the Coast Guard.

3. Specific record keeping procedures and report contents for each component category in Section C.

4. Record keeping for dives conducted during inspections of the underwater hull.

5. The manner in which deficiencies and the procedures for their repair will be handled.

E. Damage Assessment & Repair Procedures

1. Discussion of categories of damage and company procedures to mitigate.

2. Casualty notification procedures with regard to 33 CFR 149.30 and 46 CFR 109 following damage to facility relating to underwater body and hull structure.

3. Specific procedures and methods to investigate damage or potential damage to hull or internal structures.

4. Procedures to submit proposed methods for repair of both underwater defects and damage to the RO and the Coast Guard.

III. Structural Critical Inspection Points

A. Details of structurally critical locations on the hull of the facility (listing, details, inspection cycles & general inspection procedure).

B. Drawings detailing the crucial/high stress inspection points as determined by a recognized RO or by the MSC.

TABLE OF CONTENTS

A. Applicability of Regulations **G5-2**

B. Developing Partnerhips with BSEE **G5-2**

C. Lifesaving Equipment on Unmanned Fixed Platforms **G5-2**

D. Fixed Platform Inspection Program **G5-3**

1. Jurisdiction G5-3
2. Inspections G5-3
3. Investigations G5-5
4. Fixed OCS Facility Inspection Report, Form CG-5432 G5-5
5. Emergency Evacuation Plans (EEPs) G5-5
6. Lifesaving/ Firefighting Equipment G5-6
7. Catwalks – Manned Platforms G5-6
8. Single Well Caissons – Unmanned Platforms G5-6
9. Swing Ropes and Knotted Man Ropes G5-7

A. Applicability of Regulations

A fixed OCS facility means a bottom-founded structure or other device permanently attached to the subsoil or seabed of the Outer Continental Shelf (OCS), erected for the exploration, development, production, or storage of resources from the subsoil or seabed. The term includes, but is not limited to, artificial islands, platforms, guyed towers, and articulated gravity platforms.

The regulations found in 33 CFR Subchapter N are applicable to all fixed OCS facilities operating outside of state waters. All fixed facilities must be marked in accordance with the regulations found in 33 CFR 67.

The Outer Continental Shelf Lands Act (OCSLA), as amended, directs the Coast Guard and Bureau of Safety and Environmental Enforcement (BSEE) to conduct initial and annual inspections of OCS facilities. The annual inspection may be in the form of scheduled or unannounced inspections.

This inspection requirement is further modified by 33 CFR 140, subpart B, which requires the Coast Guard to conduct initial inspections and allows the owner/operator of the facility to conduct annual self- inspections. The Coast Guard (NCOE) will conduct recurring training with and for BSEE to be able to conduct these inspections on the CGs behalf. .

B. DEVELOPING PARTNERHIPS WITH BSEE

OCMIs are encouraged to develop partnerships with regional BSEE personnel to achieve the following:

a. Develop lines of communication for information exchange.

b. Accompany BSEE inspectors on a space available basis.

c. Develop a targeting strategy for OCS facilities.

C. LIFESAVING EQUIPMENT ON UNMANNED FIXED PLATFORMS

33 CFR 144.10-1 does not specifically require that lifesaving equipment be available on an unmanned platform at all times; it is only required when personnel are on the platform.

D. FIXED PLATFORM INSPECTION PROGRAM

The Outer Continental Shelf Lands Act (OCLSA) authorizes the Coast Guard to utilize another federal agency for the enforcement of Coast Guard regulations on the OCS. On Feburary 7, 2002, the Coast Guard amended 33 CFR part 140 to grant BSEE the authority to act on behalf of the Coast Guard to perform inspections on fixed OCS facilities in order to ensure compliance with Title 33 C.F.R. Chapter I, Subchapter N, Outer Continental Shelf Activities.
The Coast Guard continues to be responsible for initial fixed facility inspections. However, once the initial inspection has been completed, the annual oversight inspections are conducted by BSEE inspectors on the behalf of the Coast Guard. The Coast Guard retains regulatory authority over its self-inspection program, with BSEE responsible for ensuring compliance with self inspections.

---

1. Jurisdiction

In accordance with the jurisdiction afforded us by OCSLA the Coast Guard has jurisdiction over fixed OCS facilities in waters beyond the seaward limits of state waters. Fixed OCS facilities located in state waters are not subject to Coast Guard inspection and are not included in this program.

---

2. Inspections

a. 33 CFR Subchapter N requires owners and operators of fixed OCS facilities to conduct an annual self-inspection. These facilities are also subject to scheduled and unscheduled spot-check inspections.

b. BSEE administers the fixed platform annual oversight inspection program on behalf of the Coast Guard to ensure compliance with 33 CFR Subchapter N.

c. BSEE ensures compliance with the self-inspection program and conducts spot-check inspections on fixed OCS facilities. The Coast Guard will continue to conduct initial inspections on newly constructed fixed OCS facilities.

d. While BSEE is acting on behalf of the Coast Guard, there is nothing to prevent a Coast Guard inspector from conducting a spot check inspection on a fixed facility at any time or concurrently with other OCS inspection activities. MIs are encouraged to conduct such spot checks when conducting other activities in the vicinity of a fixed platform. The Coast Guard shall forward the results of all spot check inspections regardless of the findings the appropriate BSEE office.

e. If the Coast Guard issues a Vessel/Facility Inspection Requirements, Form CG-

835, during a spot check inspection, the inspector shall ensure the owner/operator corrects the deficiency within a reasonable time frame (generally no more than 30 days).

f. The initial inspection process:

(1) District receives and reviews the Application for Class I Aids to Navigation on Artificial Islands and Fixed Structures, Form CG-4143, submitted by facility owner/operator.

(2) Districts shall ensure timely approval and forwarding of the applications to the cognizant OCMI.

(4) The OCMI conducts initial OCS fixed facility inspections per 33 CFR Subchapter N within 45 days or upon notification from owner/operator that the facility is ready.

(5) The OCMI documents the results of the initial inspection in MISLE.

(6) The OCMI ensures that all outstanding deficiencies are corrected in a timely manner. OCMI forwards documentation including the Application for Class I Aids to Navigation on Artificial Islands and Fixed Structures, Form CG-4143, and Inspection results to BSEE.

(7) Inspection responsibilities are turned over to BSEE.

g. BSEE Inspectors use a Potential Incidents of Noncompliance (PINC) checklist together with the facility's completed Fixed OCS Facility Inspection Report, Form CG-5432 to ensure compliance with Coast Guard Regulations.

h. BSEE inspectors issue an Incident of Noncompliance (INC) to the owner/operator for any deficiencies that can't be corrected during the course of the inspection. INCs may include a warning, component shut-in, or a facility shut-in, depending on the severity of the deficiency and the safety hazard that it creates.

i. BSEE tracks and verifies that all outstanding deficiencies are corrected within a reasonable timeframe (generally no more than 30 days). Noted deficiencies that are corrected during the course of the inspection are documented by BSEE.

j. Appeals of regulatory actions and resultant penalties shall be processed exclusively by the issuing agency (Coast Guard or BSEE) in accordance with the issuing agency's appeal process.

3. Investigations

As specified in Title 33 CFR Subchapter N, and within the 2009 MOA between BSEE and the Coast Guard, the Coast Guard retains investigation responsibilities for all incidents related to OCS activities.

a. Where the Coast Guard and BSEE have overlapping responsibilities, the agencies should work together to minimize or eliminate the duplication of effort.

b. The Coast Guard will normally be the lead investigative agency for incidents listed in 33 CFR 140.201.

c. All incidents subject to investigation under 33 CFR 140.201 shall be conducted in accordance with 46 CFR 4 and documented in MISLE

---

4. Fixed OCS Facility Inspection Report, Form CG-5432

a. Facility owners and operators do not need to submit Fixed OCS Facility Inspection Report, Form CG-5432, to the Coast Guard or BSEE. Instead the operator shall conduct the required self-inspection annually and retain a copy of the Fixed OCS Facility Inspection Report, Form CG-5432, on board the facility.

b. At a minimum, the two (2) most recent Self – Inspection Reports shall be retained on board.

c. BSEE inspectors verify that the Fixed OCS Facility Inspection Report, Form CG-5432, has been completed during their annual inspection of each facility.

d. In instances where the Fixed OCS Facility Inspection Report, Form CG-5432, cannot be retained on board (unmanned facilities with no living quarters); a copy may be retained at an alternate location convenient to the operator. Upon request, the facility operator must provide copies of any Fixed OCS Facility Inspection Report, Form CG-5432's, to the Coast Guard or BSEE.

---

5. Emergency Evacuation Plans (EEPs)

The Coast Guard will review and approve EEPs in accordance with 33 CFR 146.140. During their inspection of fixed facilities, BSEE inspectors ensure compliance with EEP requirements.

---

6. Lifesaving/ Firefighting Equipment

a. Variances. BSEE consults with the local OCMI to determine suitable options, temporary measures or restrictions during the repair or replacement of required firefighting equipment and lifesaving appliances. BSEE initiates this process with the local OCMI. In cases where the owner/operator contacts the Coast Guard directly, BSEE shall be notified immediately.

b. Approval process. The Coast Guard shall continue to approve equipment for use on fixed offshore facilities and publish the list of approved equipment in the Federal Register and COMDTINST M16714.3 (Series) in accordance with 33 CFR 140.15(b). The Coast Guard shall also notify BSEE of any newly approved equipment and provide training as needed.

---

7. Catwalks – Manned Platforms

33 CFR 143.101 (c) requires all manned OCS facilities be provided with at least two primary means of escape extending to the water. 33 CFR 143.101 (a) defines primary means of escape as fixed stairways or ladders of metal construction. For OCS facilities that are connected to adjacent facilities by bridges, or catwalks which allow free access from one facility to another, the catwalk may serve as one of the primary means of escape provided:

a. The catwalk leads to another location that provides a primary means of escape extending to the water, and

b. There is a sufficient amount of primary lifesaving gear per 33 CFR 144.01-1 or 144.01-15 at this alternate location to accommodate 100% of the personnel onboard the manned facility if they cross the catwalk and egress to the water via this alternate escape route.

---

8. Single Well Caissons – Unmanned Platforms

33 CFR 143.101(d) requires unmanned OCS facilities be provided with one primary means of escape and, when personnel are onboard and one secondary means of escape for every 10 persons onboard. In the case of small single-well caisson type facilities, the primary means of escape is usually a fixed ladder from the topside structure (work deck) to the waterline. Since the work deck on these platforms is typically very small, a worker cannot become trapped far from the primary escape route. Furthermore, the risk to workers attending these facilities is quite low because there is usually very little processing equipment onboard, plus the limited frequency and duration in which personnel visit these facilities further lessens the risk. Taking all this into consideration, a

single-well caisson type facility must have one primary means of escape but will not be required to have a secondary means of escape, even when workers are on the platform, provided:

a. The work deck is no more than 20 ft x 20ft (or 400 square feet) in size, and

b. The work deck is no more than 20 ft above mean low water.

---

9. Swing Ropes and Knotted Man Ropes

A primary means of escape shall be installed to meet the requirements in 33 CFR 143.101. A secondary means of escape shall be constructed and installed to the satisfaction of the cognizant OCMI. Item (8) of Fixed Platform Inspection Program, CCGD8INST 16711.1 (series) is the recommended standard for construction and maintaining man ropes and swing ropes. Particular attention should be given to man ropes and swing ropes due to weathering of the ropes and the dangers that are encountered when using these devices.

Man ropes should be replaced immediately if there is any evidence or wear, dry rot, mildew or ultraviolet deterioration. Swing ropes are subject to all the same considerations as man ropes.

CHAPTER 6: Procedures Applicable to Other Vessels Engaged in OCS Activities

TABLE OF CONTENTS

A. Offshore Supply Vessels (OSVs) G6-2
1. Definition/Applicability G6-2
2. Change of Service G6-2
3. Delivery of excess fuel to drilling platforms G6-3
4. Rescue Boats G6-3

B. Liftboats G6-6
1. Drydock/Structural Examination G6-6
2. Drydocking Alternatives G6-7
3. Conducting a Liftboat Drydock Inspection G6-7
4. Leg Removal and Inspection Intervals G6-8
5. Legs, Jackhouses, and Support Structures G6-12
6. Hydraulic Jacking Systems G6-13
7. Engineering Related Systems G6-14
8. Steel Wastage Allowance G6-15
9. Tailshaft Inspection Intervals and Examinations G6-16
10. Lifesaving Policy G6-17
11. Firefighting and Alarm Equipment G6-18
12. General Operations G6-18
13. Cranes G6-19
14. Route Restrictions G6-20
15. Manning G6-20
16. Domestic Voyage Personnel Carriage Allowance G6-20
17. International Voyages G6-21
18. Security G6-21

C. Drilling Tenders G6-21
1. Inspection procedures G6-21
2. Drydocking G6-21

D. Crewboats G6-22
1. Exemption from Tank Vessel Requirements G6-22
2. Fuel Transfers G6-22
3. COI G6-22

E. Offshore Renewable Energy Installations (OREI) G6-22

F. Other Foreign Flag Vessels Working on the U.S. OCS G6-23

A. OFFSHORE SUPPLY VESSELS (OSVS)

1. Definition/Applicability

For U. S. vessels, as long as the vessel in question fits the definition of an OSV, it is considered an OSV and may be inspected as such.

a. An OSV is defined in 46 U.S.C. 2101(19) as "a motor vessel that regularly carries goods, supplies, or equipment in support of exploration, exploitation, or production of offshore mineral or energy resources."

b. The application of this definition is not affected by the physical location of the vessel. The word "offshore," as it modifies "supply vessel" has no geographical significance.

c. "Offshore" is not defined by statute or regulation. Past administrative policy has been to define "offshore" as that water seaward of the coastline (as measured from the mean high water mark).

d. Additionally, 46 CFR Subchapter L allows for the granting of "grandfather" status to previously certified OSVs, provided they maintained a COI prior to the effective date of the regulations and they continue to receive inspections following the same guidance enforced prior to the effective date of the regulations. The "grandfather" status is forfeit should the vessel change its employment from OSV to another service and undergo major modifications.

   All vessels that were grandfathered had to complete construction and had to receive a COI prior to 16 March 1998.

2. Change of Service

If an inspected OSV surrenders its COI or otherwise changes service, certain privileges granted to that class of vessel no longer apply. Tonnage, manning, and subdivision are several areas affected.

a. Tankage previously exempted as ballast water spaces for offshore drilling, mining, and related purposes may be included in the new tonnage of the vessel unless otherwise exempted. A review of any ballast exemption in excess of 30 percent of the vessel's gross tonnage, calculated without any allowance for water ballast, is required for the new service of the vessel.

b. In the manning area, the 600 mile voyage, two watch system for OSVs is no longer applicable, per 46 USC 8301 (b).

c. With respect to subdivision, the installation of Class 1 watertight doors is restricted outside the offshore oil trade.

---

3. Delivery of Excess Fuel to Drilling Platforms

Under 46 U.S.C. 3702(b), certain OSVs are permitted to transfer fuel from their own fuel tanks to offshore drilling or production facilities without being inspected and certificated as tank vessels.

a. 46 U.S.C. Chapter 37 does not apply to a documented vessel under these circumstances, provided the vessel in question is not more than 500 GT, is not a tanker and is in the service of oil exploration. 46 CFR Subchapter L grants further exceptions to the carriage of flammable and combustible liquids.

b. The allowable amount of flammable or combustible liquids, as listed in 46 CFR 30.25-1, may be carried aboard an OSV as long as it does not exceed 20 percent of the vessel's deadweight. This rule does not apply to Grade D and E drilling fluids and excess fuel oils when they are carried in integral tanks.

c. The person on board an OSV engaged in this type of operation who is in charge of the transfer operation must be a certified tankerman.

---

4. Rescue Boats

46 CFR 133 requires the use of more stringent requirements than SOLAS approved craft on new U.S. flagged OSVs. When any lifesaving appliance or arrangement on an OSV subject to this part is replaced, or when the OSV undergoes repairs, alterations, or modifications of a major character involving replacement of, or any addition to, the existing lifesaving appliances or arrangements, each new lifesaving appliance and arrangement must meet the requirements of 46 part 133, unless the OCMI determines that the OSV cannot accommodate the new appliance or arrangement. This same part also allows for the substitution of a workboat in place of a required SOLAS approved rescue boat. In all cases, the Coast Guard must ensure that the overall goal of safety of life at sea is accomplished while considering any change to existing rescue boat arrangements. An OCMI's decision to replace an existing rescue boat need not be based solely upon a determination the craft is no longer serviceable. If the adequacy of an existing, but serviceable, rescue boat is in question, the OCMI should require demonstration of its suitability by a performance test to determine if replacement is necessary.

If a vessels rescue boat is determined to be inadequate for its intended purpose, a requirement to correct the discrepancy shall be issued by using the Vessel/Facility Inspection Requirments, Form CG-835. Most existing OSVs will have three options available to correct this deficiency.

a. Rescue Boats. Rescue Boat Approved under 46 CFR Approval Series 160.156. These are SOLAS approved rescue boats and a launching recovery system that meets 46 CFR 133.160.

b. Suitable Workboat. As an alternative to the rescue boat requirement, a suitable workboat should meet the following:

(1) Capable of being launched within five minutes.

(2) Sufficient seaworthiness (i.e. adequate positive buoyancy, stability, freeboard and/or deck coverage) to allow for maneuvering in a disturbed seaway with at least a three person complement.

(3) Adequate room for at least a two person crew with room for a third person lying down.

(4) Capable of marshalling and towing inflatable liferafts (or lifeboats if the vessel is so equipped) loaded with their full complement of equipment and persons.

(5) Can affect the recovery of a helpless person and return that individual to the parent vessel within fifteen minutes.

(6) If freeboard constraints do not allow for proper launching and loading from the main deck, the workboat shall be equipped with a launching/recovery system that meets the following:

(a) Located such that the stowed vessel can be quickly launched and will swing clear of all rigging, stacks, structures and overboard discharges.

(b) The davit and winch structural members shall have a design safety factor of 4.5 times the Maximum Working Load (MWL). MWL includes the total of the weight of the boat, personnel, and boat equipment.

(c) The falls, suspension chains, links and blocks shall have a design safety factor of 6 times the MWL.

(d) The davit shall be fitted with an electric/hydraulic or hand powered winch and shall be capable of raising and lowering the workboat at MWL.

(e) If electric/hydraulic powered, the davit winch shall be fitted with automatic cut-off devices in accordance with SOLAS Chapter III Section VI.

(f) Each winch shall be designed to allow for lowering under the forces of gravity or independent stored power.

(g) Each winch shall be fitted with a brake to control the rate of lowering to approximately 0.5 meters per second.

(7) There are no firm rules on which boats may adequately serve as a workboat substitute for a rescue boat. However, experience has shown that the buoyancy and stability of rigid hull inflatables, or inflatable boats with reserve buoyancy, deep "V" hull and double "V" hull boats are suitable candidates for this service. Additionally, boats with outboard engines in the 15-30 horse power range have been determined to be adequate for this service.

c. Rescue Platform. 46 CFR 133.135 states that the vessel qualifying as a rescue platform must be arranged such that the rescue can be observed from the navigation bridge. However, if this requirement cannot be met, vessels with an efficient and reliable method for providing two way communications between a person at the side of the vessel and the person at the helm may be considered equivalent to 46 CFR 133.135, if shown to be at least as effective.

(1) To qualify as a rescue platform, a vessel shall demonstrate that it has the equipment and trained crew to effect the recovery of a helpless person within fifteen minutes. Although there is no set of proscriptive requirements that are necessary to meet the above essential components of a vessel qualifying as a rescue platform:

(a) The vessel should have an effective two-way communications system between the person at the rescue station and the person on the helm.

(b) Each member of the crew should be trained in his or her duties during a man overboard situation. (There is no way to foresee who will go overboard, there must be sufficient cross training to provide for all contingencies.)

(c) The vessel should have a system to recover a helpless person from the water while minimizing injury to that individual. To provide for all contingencies, equipment used to affect the recovery should be provided at each side of the

vessel or must be easily and quickly transferrable to a recovery station at either side of the vessel. In addition to the recovery equipment, training and planning regarding the procedures to position a helpless person in the recovery apparatus must be planned and practiced.

(2) 46 CFR 133.135 allows certain OSVs to act as its own rescue platform when it is not "regularly" restricted in its ability to maneuver. Vessels that are "regularly" restricted in their ability to maneuver due to towing or anchor handling operations, may at the discretion of the OCMI, rely upon the rescue boat on the attended vessel to satisfy its rescue needs. To qualify for this provision, the vessel must prove to the OCMI that the rescue boat on the attended vessel meets all the requirements for a rescue boat and that it is sufficiently manned at all hours of the day to affect a timely rescue.

B. LIFTBOATS

Existing liftboats will be inspected initially and subsequently under the guidance provided in NVIC 8-91. 46 CFR Subchapter L is applicable to new vessels contracted for or delivered after 15 March 1996.

As with OSVs, all liftboats that were inspected and certified under the guidance found in NVIC 8-91 prior to the effective date of 46 CFR Subchapter L are granted grandfather status and must continue to receive inspections following the same guidance. The grandfather status is forfeit if the vessel changes its employment from OSV to another service or undergoes major modifications.

All vessels that were grandfathered had to complete construction and had to receive a COI prior to 16 March 1998.

Most liftboats now fall under the same regulatory standards as conventional hulled OSVs; however there are several areas of inspection that are unique to this type of vessel to include: automation, steel wastage, tail shaft inspection intervals, drydock inspections, lifesaving systems, firefighting equipment, systems/equipment for general operation, crane inspection and manning.

---

1. Drydock/Structural Examination

The manner in which this examination will be performed should be very similar to that employed on independent leg jack-up MODUs.

a. It is very likely that the initial exams will be conducted without benefit of approved plans, thus making determination of original scantlings difficult. In general, liftboat

scantlings are relatively light due to weight considerations. Therefore, requiring a comprehensive ultrasonic testing UT exam of the hull is appropriate. Close attention should be paid to plate inserts. Any doublers or spigot patches should be properly cropped and renewed.

b. Specific welding procedures employed in the construction of these vessels may not be known. Where repairs are required, only current acceptable welding procedures should be employed.

---

2. Drydocking Alternatives

There are many acceptable methods for conducting a liftboat hull exam. The following methods may generally be considered acceptable:

a. Conventional Drydocking – Includes lifting the vessel and its appendages out of the water to allow a comprehensive inspection and evaluation of the vessel's underwater hull, submerged portions of legs, towers and pads.

b. Drydocking Alternatives – The regulations provided for various alternatives which may provide an equivalent level of safety as a conventional vessel drydocking. These regulations are found in 46 CFR Subchapter L, 46 CFR 125.170; and alternatives found in 46 CFR Subchapter I-A, 46 CFR 107.267 for self-elevating units. OCMI's may entertain dry-docking alternatives proposed by industry representatives. At no time shall the alternative method place the crew, shipyard workers, third party surveyors, contractors, or Coast Guard inspectors in danger.

c. Underwater Inspection in Lieu of Drydocking (UWILD) – This alternative may be utilized in accordance with 46 CFR 126.140. In such cases, the guidance in NVIC 1-89 "Underwater Survey Guidance" should also be followed.

---

3. Conducting a Liftboat Drydock Inspection

Liftboats spend the majority of their service life jacked up out of the water; so special attention must be paid to the following items:

a. Pads – These connections at the bottom of the legs are the main load-bearing area of the vessel. The entire pad (top, bottom and all sides) should be visually inspected for damage/insets, by dry-docking or some other alternative method acceptable to the OCMI. The "leg-to-can" connection welds and the "can to-pad" connection welds should be non-destructively tested (NDT) at every hull exam or anytime the vessel has had an incident involving undue stress in these areas.

b. Leg Tower Sponsons – The area above the leg pad on the hull should be examined for deformation and fractures. Often debris remains on the pad and may cause hull damage when the leg is retracted. This area is critical to the support of the leg and tower. If vertical deformation of the hull or insets are deep or numerous, the area should be cropped and renewed and suitable access provided to the leg sponson in order to ensure the internal framing is not tripped or fractured.

c. Legs and Leg Rack – The leg rack is another critical area of the vessel. This is where the hydraulic motor drive gear meets the mechanical leg rack. Great amounts or torque are applied to this area on a regular basis. The racks should be inspected for chipped, damaged or missing teeth, and excessive rack-to-gear wear. The leg rack lower terminus should also be NDT tested for fractures at each dry-docking. The legs should also be inspected for significant creases, dents and deflections that may increase the rack to gear clearance and potentially allow the gear to free wheel, and cause the vessel to descend uncontrollably.

---

4. Leg Removal and Inspection Intervals

Liftboat companies should have in place a fleet-wide plan adequately addressing the preventive maintenance and corrective measures for each vessel's legs, pads and jacking systems. At a minimum, the following items should be addressed in the plan.

a. Leg Inspection Cycles and Maintenance – while legs are installed, the legs should be visually inspected annually. The legs should be examined for significant creases, dents and deflections. Note that exceptionally long legs fitted with a single rack system may have slight deflection over the length of the leg during extreme temperatures. The leg rack and pinion should be checked for missing or damaged teeth and fractures. When visual examination warrants, additional/more detailed inspections should be conducted. In addition to the annual visual inspection, at every five (5) year dry-dock cycle, the legs and jacking components should be inspected as described below. If the Coast Guard marine inspector determines that the legs cannot be inspected adequately while installed, they should then be removed to facilitate examinations.

(1) The below list is the minimum recommended inspections and maintenance of liftboat jacking system components to be conducted by Coast Guard marine inspectors at 5 and 10-year intervals for those vessels operated on exposed waters routes (Coastwise, Oceans). The following is a best industry practice developed in consensus with representatives of the Offshore Marine Service Association (OMSA) Liftboats Subcommittee. Vessels operated exclusively on protected waters (L, B &S) are not subject to routine removal of the legs for inspection and should repeat the 5 year inspection items, unless the marine inspector determines

that it is necessary to pull legs based upon other inspection results or observed damage. The recommended cycle for pulling of legs should normally commence when the vessel is 10 years old from the delivery date with the first recommended leg removal normally occurring 20 years from the vessel's delivery date. However, the marine inspector may determine that it is necessary to remove a liftboat's leg(s) at any time based upon other inspection results or observed damage, if he or she determines it is necessary to assure a vessel's safety or seaworthiness.

(2) Five (5) & ten (10) year liftboat leg inspections should be documented on the vessel's COI to show "last completed" for each leg.

(3) Five (5) Year Drydock Inspection Items

(a) Rack – Visually inspect rack length equal to twice tower height, but not less than 20 feet above tower and one random location (rack must be free of all coatings). If unable to make the required length available for inspection, then the owner or operator should provide an alternative inspection plan.

(b) Rack Butts – Clean and inspect (NDT required) rack end butts on all legs.

(c) Pinion – Inspect pinion and adjust (as needed) pinion to rack clearance, and record results.

(d) Gearbox Oil – Draw oil sample/analyze from every gearbox, and record results.

(e) Gearbox Disassembly – Disassemble and inspect lower-most gearbox per leg; additional inspection based on results.

(f) Bearings – Bearing and cap inspection on gearbox pulled for disassembly; additional inspection based on results.

(g) Brakes – Inspect brake assembly of pulled gearbox per leg; additional inspection based on results.

(h) Tower Guides – Inspect tower and rack guide's clearances, and compare with manufacturers recommendations.

(i) Leg to Pad Connection – Clean and NDT all leg to pad connection welds; evaluate connection integrity.

(j) Hydraulic Hoses – Replace all external hydraulic jacking system hoses that are exposed to weather.

(4) Ten (10) Year Drydock Inspection Items

(a) Rack- Conduct visual inspection and NDT of entire rack length, rack must be free of all coatings, record completion. Conduct NDT of rack to leg welds, entire length of rack and record results.

(b) Rack Butts - Clean and inspect (NDT required) rack end butts on all legs.

(c) Pinion – Check and adjust (as needed) pinion to rack clearance, and record results.

(d) Gearbox Oil – Draw oil sample and analyze from every gearbox, and record results.

(e) Gearbox Disassembly – Disassemble and inspect lower and uppermost gearbox on each leg inspection based on results.

(f) Bearings – inspect bearings and caps on gearboxes pulled for disassembly; additional inspection based on results.

(g) Brakes – Pull and inspect two brake assemblies on gearboxes pulled for disassembly; additional inspection based on results.

(h) Tower Guides - Inspect tower and rack guide's clearances, and compare with manufacturers recommendations.

(i) Tower Roundness – Inspect tower roundness at several locations to ensure within manufacturer tolerances.

(j) Tower Thickness – Evaluate tower wall thickness by conducting grid on tower using NDT (UT), and record results.

(k) Leg to Pad Connection - Clean and NDT all leg to pad connection welds; evaluate connection integrity.

(l) Pad Plate Thickness – Evaluate pad shell plate thickness by performing UT grid; inspect all plug welds.

(m) Hydraulic Hoses – Replace all external hydraulic jacking system hoses in locations exposed to weather.

(n) Legs External – Clean entire leg of coatings, NDT all legs butt weld joints, and record completion. Conduct UT of leg plate thickness in minimum of four (4) places, and record results.

(o) Legs Internal – Remove pan from leg, visually inspect all leg internals, ladder points, butt welds, etc.; if visual inspection reveals areas of concern, appropriate means of non destructive testing should be utilized to further inspect these areas.

b. Leg Removal Cycles – The leg removal cycles should start ten (10) years from the vessel's delivery date with the first leg removal/examinations occurring, under normal circumstances, at a scheduled drydocking approximately twenty (20) years from delivery.

(1) After twenty (20) years from delivery, the legs should be removed not less than once every ten (10) years for examination.

(2) If the legs are removed before the recommended interval; for any reason, such as repair, each removed leg may be given removal credit and another ten-year cycle started, provided the "10 year" inspections described in paragraph 1.a.4 above, are completed.

(3) Credit for removal should be annotated on the vessel's Certificate of Inspection (COI).

(4) Those vessels operating exclusively on protected routes (Lakes, Bays, and Sounds) are generally accepted for leg removal, unless circumstances dictate their removal for repair.

(5) When the legs are removed for their 10 year inspection cycle, the entire rack, rack lower terminus, all leg butt welds, and leg to can connection should be cleaned or degreased prior to inspection. The owner should then perform inspections as outlined in paragraph 1.a.4, above, and provide reports and/or third party results to the attending marine inspector.

(6) If a vessel has a delivery date greater than twenty (20) years prior to the effective date of March 4, 2008, (date of original CG-543 Policy Letter 07-02, now integrated in to the MSM.), and the owner cannot provide documentation confirming the legs have been pulled and inspected as outlined above, then the legs should be pulled and inspected before the end of current drydock cycle, or at

a maximum within five (5) years.

---

5. Legs, Jackhouses, and Support Structures

These features are extremely critical to the safe operation of liftboats and should receive careful attention during drydock and structural exams.

a. Legs should be sighted to detect any deflection.

b. All significant creases and dents should be marked for insert.

c. Rack and pinion assemblies should be examined for tears, fractures, and broken teeth. Most boats employ a single rack system. Consequently, the side opposite the rack is subject to extreme wear due to rubbing on the jacking guide. Wear-down of as much as 50 percent of the original scantlings is known to have existed. This area should be subject to UT examination for the full length of the leg.

d. When original scantlings are determined from approved plans, each leg should be verified as meeting the stated thickness. Wastage limits are addressed in part B-6 of this Chapter.

e. If evidence indicates that liftboat legs may have been fabricated undersized, despite what was indicated on the builders' drawings, the owner or operator should provide calculations that the as-built legs. Consult MSC for assistance if needed. Also, legs on existing vessels may have been lengthened after original build and could be considered suspect. It is recommended, in this case, that consideration be given to employing x-ray examination of butt welds to verify that full penetration was achieved.

f. The leg to pad connections and condition of the pads themselves are also critical due to the relatively light scantlings for the amount of loading they are subject to. Careful inspection of the footings is critical to ensure that they remain watertight. NDT may be necessary to evaluate these connections.

g. On some vessels, the jacking guide to hull attachments may be subject to tearing problems. Where this is in evidence, retrofit, and possible redesign of the weld should be discussed with the owner. Additionally, condition and attachment of headers and supporting structure should be verified. Information about lamellar tearing is available in the Ship Structure Committee Report SSC-290. Copies of this report may be obtained from the Secretary, Ship Structure Committee, or Commandant (CG-ENG).

h. Leg-To-Tower Clearance - Each designer and builder specifies a particular leg-to-

tower clearance range for proper operation of the vessel's leg and jacking system; too tight and the system may bind, too loose and the system may wobble and/or cause improper rack-pinion operation. This clearance may deviate from one vessel class to another, however; it is important that the clearance be checked in accordance with the manufacturer's guidelines and compared to the recommended range. When the clearance falls out of the recommended range, the owner/operator should present a proposal to bring this clearance back to the builder's or designer's specifications.

---

6. Hydraulic Jacking Systems

Hydraulic system jacking failures have been the cause of a number of liftboat casualties. Inspection guidance (NVIC 8-91) provides that systems must be modified as necessary to ensure they are fail-safe.

a. There are two types of systems installed on liftboats, open loop or closed loop. Open loop systems are arranged with all the legs supplied in series. Closed loop systems serve each leg individually. Both systems employ a common reservoir. Flow from the reservoir through the pumps to the manifolds is directed by three-way valve controlled from the bridge. The planetary brakes are spring loaded and, theoretically, activate when they sense loss of fluid pressure. However, in some previous cases, upon component failure, the brakes did not sense loss of fluid and the vessels fell rapidly.

b. This problem may be remedied in several ways, the most common being the installation of compensating and check valves into the systems. It is the responsibility of the owner to propose an acceptable design.

c. Material condition of the manifolds, hoses, planetaries, couplings, and pinions should be carefully checked as well as any system modifications.

d. When the systems are tested, physical breaks should be made upstream and downstream of the compensating valves.

e. Additionally, leg controls in the wheel house should be of the "dead man" type only. A number of accidents have occurred because the operators activated a fixed position switch and walked away from the consoles.

(1) The following jacking system components should be maintained in accordance with the manufacturer's recommendations:

(a) fluid levels;

(b) hydraulic piping and hoses;

(c) pump drive shaft assembly;

(d) jacking system controls;

(e) jacking system pressure;

(f) gearbox assembly; and

(g) bearings.

(2) Vessel owners should demonstrate the installed hydraulic jacking system complies with the requirement of 46 CFR Subchapter F (46 CFR 58.30).

(3) Owners of vessels certificated under subchapter L or I may provide approved plans.

(4) Owners of vessels certificated under the guidance of NVIC 8-91 should demonstrate substantial compliance with 46 CFR 58.30 and that the system is "fail-safe". Often during initial certification, these vessels were held to varying standards and may not "substantially" comply with Subchapter F.

(5) Jacking system hydraulic review should be submitted to ensure fail –safe systems, including counter-balance valves and motor brakes.

(6) Installed hydraulic fittings/hoses/piping should be demonstrated to be adequate for the rated system pressure and comply with the applicable regulations and guidance. Inspectors should check systems for agreement with the drawings and parts list. This review should include a basic line drawing and component list to the satisfaction of the attending marine inspector. Once completed, a copy of the review and associated drawings should be inserted into the vessel's approved operating manual.

---

7. Engineering Related Systems

a. Bilge Alarm Sensors. Should be located in all engineering and machinery spaces. An audible and visual alarm for each space should be provided in the pilothouse and be properly marked. No device should be installed to disable these alarms.

b. Engine Overspeeds. Engine overspeed devices on all pre-46 CFR Subchapter L prime movers are "grandfathered". If installed, however; they should operate properly.

c. Ventilation Shutdown. All power ventilation equipment, heat pumps and other such devices used in hotel services should have appropriate shutdowns. Natural vents connected to the engine room and deckhouse should have weather-tight closures that are appropriately marked, "Close in Case of Fire".

d. Level Alarm. All liftboats not inspected in accordance with 46 CFR Subchapter L should be fitted with a level alarm in accordance with NVIC 8-91 consisting of a distinct alarm that sounds at the main operating station to indicate an out-of –level condition or uneven leg sinkage in the vessel's elevated condition.

e. Low Hydraulic Oil Level Alarm. All liftboats should be fitted with an audible and visual alarm at the main operating station that indicates a loss in hydraulic oil level in the main jacking system.

f. Shaft Speed. An indicator providing the propeller shaft speed should be available to the operator in the pilothouse. Shaft speed indication may be obtained via:

(1) an engine tachometer with corresponding "shaft sheets" that convert engine RPM to shaft RPM or

(2) a separate shaft tachometer.

---

8. Steel Wastage Allowance

Lift boats are weight-sensitive vessels and experience maximum hull stresses when elevated since they are only supported at each end of the vessel, compared to a conventional vessel which has its hull supported by buoyancy distributed along its length. Historically, liftboats have been built with the objective of keeping both leg weight and overhull weight to a minimum. The desire to reduce weight in the past led to many older liftboats to be built with reduced scantlings when compared to conventional hulls of the time.

a. For newer liftboats, built in accordance with approved 46 CFR Subchapter L plans, the wastage allowance can follow current standards; however

b. for older (non-Subchapter L) liftboats, evaluation should be based on more conservative allowances unless structural analyses demonstrate that greater wastages can be safely tolerated.

c. Most older vessels were built using the American Bureau of Shipping's (ABS)

MODU Rules and the referenced ABS Steel Barge rules.

d. In the case where they were not built to these standards, it was often trial and error until the vessel was found to be sturdy enough to satisfactorily meet the service demands. These vessels were not built with Coast Guard oversight or approved plans and the approved section modulus/leg strength calculations and associated structural analysis may not be available.

e. The thickness utilized for evaluation of hull wastage should be the actual plate thickness on board the vessel compared to the approved thickness. In some cases, thicker plate was used during construction when compared to the thickness required by ABS' Rules or otherwise approved. As a result, more wastage may be seen on a particular "over scantling' vessel, while still within tolerance of the approved plans. Use the following guidelines for liftboat categories when determining appropriate wastage allowances:

(1) Vessels built to 46 CFR Subchapter L or I standards with approved plans – Allow 25% wastage in accordance with NVIC 7-68.

(2) Vessels built without approved plans – Allow 20% wastage for ¼" or thicker steel hull or deck plating in accordance with ABS 1973 MODU and Steel Barge rules. Allow 10% wastage for 3/16" or thinner steel hull or deck plating in accordance with ABS 1973 MODU and Steel Barge rules.

(3) Vessels built without approved plans but having a Professional Engineering (P.E.) – provided section modulus and strength calculations – Allow maximum wastage as per calculations, but in no case allow more than 25%. Guidance for the acceptance of P.E. certifications can be found in NVIC 10-92 Ch. 2.

---

9. Tailshaft Inspection Intervals and Examinations

a. Liftboats less than 100 GT (domestic) are not normally required to pull tail shafts for examination unless deemed necessary by the marine inspector or unless necessary to determine the condition of the shaft bearings.

b. Liftboats of 100 GT or more will be required to undergo tail shaft examinations in accordance with the appropriate regulations. Proper tail shaft /propeller fit-up are necessary to eliminate or minimize damage due to excessive vibration.

c. An owner/operator may prove proper fit-up by many methods, including bluing, micrometer readings and others. The owner is responsible for proper fit-up of the vessel's tail shaft.

---

10. Lifesaving Policy

a. Rescue Boat – Unlike conventional vessels, liftboats operate in both elevated and afloat modes of operation. Therefore, liftboats must be able to recover a helpless person from the water in both the elevated and afloat modes. Since a liftboat cannot serve as its own "rescue platform" while elevated, each liftboat must have at least one rescue boat. If no launching device is provided, on vessels with two cranes, the rescue boat must be capable of being launched with either crane. Approval of crane launching of the rescue boat on vessels with only one crane is at the discretion of the OCMI. A crane that is used to launch a rescue boat should be certified for personnel transfer. All pre-Subchapter L rescue boats should be equipped with safety equipment to the satisfaction of the cognizant OCMI. However, at a minimum, these pre-Subchapter L rescue boats should have the following safety equipment and quantities (#): paddles (2), heaving lines (2), sponges (2), boat hooks (1), and bailer (1). All Subchapter L rescue boats must be outfitted with the equipment described in 46 CFR 133.175.

(1) A motor-propelled workboat or launch may be used in place of the required rescue boat if the embarkation and recovery arrangements of 46 CFR 133.160 (a), (c), (d), (e) and (f) are met, if shown to be at least as effective.

(2) While liftboats may be allowed to use the installed cranes to launch rescue boats in lieu of an installed davit, stability concerns and the vessel's operating manual normally prohibit the use of the cranes while the vessel is afloat.

(3) While in the afloat mode, cranes should only be used to launch and recover the rescue boat if the vessel's operating manual permits use of the crane(s) in the afloat mode.

(4) Also, while in the afloat mode, and in accordance with 46 CFR 133.135, the OCMI may determine if the vessel is arranged to allow a helpless person to be recovered from the water, provided the recovery can be viewed from the navigation bridge and the vessel does not regularly engage in operations which restrict its maneuverability. However, if this requirement cannot be met, vessels with an efficient and reliable method for providing two way communications between a person at the side of the vessel and the person at the helm may be considered equivalent to 46 CFR 133.135, if shown to be at least as effective.

(5) Depending on the vessel's hull design, this may be accomplished in several ways. Older vessels have leg pads that retract up to the hull and are exposed when underway. These leg pads can be used as a platform to rescue a helpless person if a suitable means is installed to access the pad and to transfer the helpless person

from the pad to the main deck.

(6) On many newer vessels, the pad is submerged while underway, and a separate platform should be provided. These platforms may vary based upon hull design, and it is the OCMI's discretion to judge the platform to be fit to recover a helpless person from the water.

(7) A rescue harness should also be provided, regardless of rescue platform type.

b. Lifesaving Systems - Previously approved lifesaving appliances or arrangements are acceptable. The regulations in 46 CFR 133.10 should be consulted when changes are made to lifesaving equipment or arrangements.

c. Embarkation Devices – It is a long standing industry practice to install knotted "manropes" on liftboats for emergency disembarkation as a partial means to meet the intent of an embarkation ladder (Jacob's ladder). These knotted manropes are generally considered acceptable as an alternative to traditional embarkation ladders as required by 46 CFR 133.110, on liftboats only. If a knotted manrope is installed, it should be long enough to reach the water at the liftboat's highest elevated position, and be examined at least annually by the vessel's crew. Excessively soiled, worn or frayed ropes or ropes with cracked or corroded attachments should be replaced or repaired immediately.

---

11. Firefighting and Alarm Equipment

a. Firemain and Raw Water Suctions - **Firemain**, bilge, and ballast systems should be capable of operation at all times, including in elevated mode. When it is practical to do so, the fire main should be tested in the elevated mode.

b. Fire Pumps - All liftboats must have an installed fire pump, its output is regulated under the appropriate subchapter and capable of operation at all times, including the elevated mode. The typical fire pump installation is a submersible type, mounted on the main deck, and connected to the fire main system through a flexible hose. These hoses should be routinely inspected for condition and serviceability. The launch appliance for lowering the pump into the water should be inspected for proper operation and condition.

c. Smoke Alarms - Each separate living space and galley should have a smoke alarm. Smoke alarms may be battery powered, independent type units, and all should have a test button to indicate proper operation.

---

12. General Operations

a. Operating Manual – All liftboats should have an operating manual onboard which is approved by the OCMI. This manual should include, at a minimum, those items required by 46 CFR 134.170.

b. Dead Man Switch – The liftboat jacking system should incorporate a "dead man" feature at the system controls, which requires a physical force from the operator (through hand and or foot pedal) be applied to the controls in order for the system to function. Once the applied force is removed, the vessel's jacking stops. Often, this is done through use of spring-loaded foot pedal or hand toggle switches.

c. Anemometer – If the liftboat's approved operating manual specifies required actions based upon wind speed, the vessel should have a reliable means to determine wind speed such as a properly operating anemometer (portable or fixed) onboard.

d. Anchors – Anchors should be installed on all liftboats in accordance with the applicable subchapter. "Grandfathered" liftboats may use existing vessel anchors. Standards set forth in ABS rules, utilizing first principle calculations, may be used to determine the appropriate anchor size. Liftboats are restricted in their routes through their approved operating manual to water depths that do not exceed the vessel's ability to jack up. However, if a liftboat loses steering or propulsion in river current the liftboat may travel a significant distance before the legs can be jacked down to stop the vessel, which may cause serious damage to nearby vessels; or the vessel may incur damage to the legs by suddenly stopping the vessel utilizing legs as emergency anchors. The anchors are considered emergency anchoring systems and should be ready for use at any time.

---

13. Cranes

a. Pedestal mounted cranes installed on OSVs, MODUs, and floating OCS facilities having a lifting capacity exceeding 5 net tons (10,000 lbs), used for purposes other than special purpose (e.g. lifting fuel hoses, handling ship supplies), should be designed in accordance with the latest edition of API Specification 2C, Offshore Pedestal-Mounted Cranes, incorporated by reference in the regulations at the time of the vessel's construction or other design standard considered equivalent by the Office of Design and Engineering (CG-ENG) (Ref: 46 CFR 108.101 and 108.601).

b. Cranes meeting the requirements in paragraph (a) should be operated and maintained in accordance with the latest edition of API Recommended Practice 2D, Operation and Maintenance of Offshore Cranes, incorporated by reference in the current regulations. Cranes, other than those addressed in paragraph (a), should be operated, and maintained in accordance with the manufacturer's recommendations (Ref: 46

CFR 109.105 and 109.521).

---

14. Route Restrictions

Route restrictions placed on the COI of a liftboat should be taken directly from the vessels stability letter. See NVIC 8-91 for guidance on the route restrictions for liftboats operating both inside and outside the Boundary Line. After reviewing pertinent stability calculations, the Marine Safety Center (MSC) will issue a stability letter which specifies route restrictions in 3 categories:

a. Unrestricted Operations – When all provisions of 46 CFR 174 Subpart C are met, within the full range of leg positions encountered while jacking. The stability letter will define the area of operation approved.

b. Restricted Operations Beyond the Boundary Line – restricted to service within twelve (12) hours of a harbor of safe refuge or location where the vessel may elevate to survive 100 knots of wind.

c. Restricted Operations Inside the Boundary Line – restricted operations inside the Boundary Line, within eight (8) hours of a harbor of safe refuge or location where the vessel may elevate to survive 100 knots of wind.

---

15. Manning

For guidance on the minimum safe manning for liftboats see Marine Safety Manual, Volume III, Marine Industry Personnel, COMDINST M16000.8B (series), Chapter 21 (Part B, *Vessel Manning*, Chapter 2, *Sample Vessel Manning Scales*, Section L, *Offshore Supply Vessels (OSVs)*).

---

16. Domestic Voyage Personnel Carriage Allowance

A liftboat may carry no more than 36 offshore workers when certificated under 46 CFR Subchapter L. In order to facilitate the industry need to carry persons in addition to the crew, who are engaged in the business of the vessel, a liftboat may be inspected under the authority of 46 CFR Subchapter I, with the unique characteristics of self-elevating units being addressed by Subchapter L. In such instances, authorization may be provided on a case –by case basis, for certification to carry more than 36 industrial personnel as defined in 46 CFR Subchapter I. This approach is similar to that used in the past to bring liftboats into certification, as described in NVIC 8-91.

---

17. International Voyages

To engage in international voyages, a liftboat must meet the applicable SOLAS requirements and have all appropriate SOLAS documentation. The SOLAS standard for cargo ships is acceptable for this purpose. Not more than 12 passengers (as defined by SOLAS) are authorized on international voyages.

---

18. Security

All vessels shall adhere to their approved Vessel Security Plans; see 33 CFR Subchapter H, Parts 101, 103, and 104, as appropriate. Liftboats engaged in international voyages must meet the International Ship & Port Facility Security Code (ISPS), as applicable, Chapter XI-2 of SOLAS.

C. DRILLING TENDERS

---

1. Inspection procedures

Drilling tenders are vessels which are typically engaged in providing material, power, machinery, manpower, and accommodations offshore. Such vessels are normally anchored for several months at a time at an offshore platform. Some of these vessels are propelled by mechanical means and some are not. As a U.S. Flagged vessel, they are inspected and certificated under 46 CFR Subchapter I.

---

2. Drydocking

These vessels are drydocked according to the regulations in 46 CFR Subchapter I. Special considerations may be given to stern tube and tailshaft bearing extension requests due to recognition of their limited amount of time underway. These requests should be made, in writing, by the owner, and should be forwarded to Commandant (CG-CVC), via the District (m) office, together with the recommendation of the OCMI.

D. CREWBOATS

1. Exemption from Tank Vessel Requirements

Oil and mineral industry support crew boats certified under 46 CFR Subchapter T are included in the statutory (46 USC 3702 b)) exemption from the tank vessel requirements allowing transfer of excess vessel fuel to drilling and production facilities if they are not more than 500 GT; not a tanker; and in the service of oil exploration.

2. Fuel Transfers

Fuel transfers from crewboats certified under 46 CFR Subchapter T should be conducted with only the vessel's crew on board (no offshore workers, industrial personnel, passengers, etc.)

3. COI

The following language may be placed on crew boat Certificates of Inspection (COI):

"When engaged in the service of oil/gas exploitation, vessel is allowed to transfer excess fuel from its own fuel tanks to oil/gas drilling and production facilities. No passengers, offshore workers, industrial personnel, persons in addition to the crew or individuals other than the crew shall remain on board during transfers of excess fuel to oil/gas drilling and production facilities."

E. OFFSHORE RENEWABLE ENERGY INSTALLATIONS (OREI)

NVIC 02-07 provides guidance on information and factors the Coast Guard shall consider when reviewing an application for a permit to build and operate an Offshore Renewable Energy Installation (OREI) in the navigable waters of the United States. The Circular identifies

information to consider when evaluating the potential impacts of an OREI which will assist in providing valuable input to the Bureau of Safety and Environmental Enforcement (BSEE) and Bureau of Ocean Management (BOEM) or another lead permitting agency for environmental review and decision making purposes.

---

1. Per 33 CFR 140.10; an OCS activity means any offshore activity associated with exploration for, or development or production of, the minerals of the Outer Continental Shelf.

2. Notwithstanding the above definition, certain offshore renewable energy installations are now covered by leasing arrangements approved by BSEE. The Coast Guard does not view OREIs as an OCS activity based on the definition of "minerals". Presently this definition has not been expanded to include "alternative energy source" such as wind.

3. As such, the manning requirements found in 33 CFR 141 do not apply to OREIs.

F. OTHER FOREIGN FLAG VESSELS WORKING ON THE U.S. OCS

Foreign vessels become subject to a Coast Guard Port State Control Examination once they enter U.S. territorial waters. This is to ensure that foreign vessels operating in U.S. waters provide an acceptable level of safety.

Such vessels may be eligible for examination reciprocity in accordance with the provisions of 46 U.S.C. 3303. If, after reviewing certificates, it is determined that a vessel is not eligible for reciprocity, then an examination of the vessel should be conducted to determine compliance with the applicable regulations.

The U.S. Customs service, now Customs Border Patrol (CBP), has ruled that the carriage of merchandise or passengers between a point in the United States and a facility on the U.S. OCS is considered Coastwise Trade, and in accordance with the Jones Act, only vessels licensed, or vessels otherwise qualified, may engage in such activity. In practice, this means that foreign vessels on the OCS may perform service functions but not supply functions (carriage of merchandise and /or passengers as defined above).