RESPONSE BOAT - MEDIUM OPERATOR'S HANDBOOK

U.S. Department of Homeland Security

United States Coast Guard

COMDTINST M16114.41 (DRAFT)

Table of Contents

..... 9

CHAPTER 1 INTRODUCTION..... 9

Introduction..... 9

A. Warnings, Cautions, and Notes..... 11

B. Facility Manager..... 13

C. Changes..... 15

D. Action..... 17

CHAPTER 2 BOAT CHARACTERISTICS..... 19

Boat Characteristics Introduction..... 19

A. General Description..... 21

B. Compartments..... 25

C. Main Deck Equipment..... 31

D. Pilothouse..... 35

E. Pilothouse Top..... 43

F. Mast..... 45

CHAPTER 3 BOAT SYSTEMS..... 47

Boat Systems Introduction..... 47

A. Propulsion System..... 49

A.1. Engine..... 51

A.2. Cooling System..... 53

A.3. Fuel System..... 55

A.4. Combustion Air System..... 59

A.5. Exhaust System..... 61

A.6. Engine Controls (DDEC)..... 63

A.7. Reduction Gear..... 67

A.8. Control System..... 69

A.8.1. PCS Vector Control Clutch Panel..... 75

Draft
Further dissemination only as directed by Commandant (CG-937) or higher Coast Guard authority.

A.8.2. PCS Vector Control LCD Alarm Panel....79
A.9. Shafting....89
A.10. Water Jets....
B. Hull System....95
C. Fendering System....97
D. Vector Control Steering System....99
D.1. Reversing Bucket....101
D.2. Steering Nozzle....105
D.3. Trim Tab....109
D.4. Hydraulics System....111
D.5. Steering Control....113
E. Communications System....115
E.1. Motorola XTL 5000 VHF Radio....117
E.2. Motorola XTL 5000 UHF Radio....121
E.3. Mobat Micom 3T HF SSB Radio....125
E.4. Taiyo TD-L1550 VHF Automatic Direction Finder....129
E.5. Furuno LH-3000 Loudhailer....131
E.6. Kahlenberg Air Horn....133
E.7. LVIS Crew Communications System....135
E.8 Standard Horizon GX5500S VHF Radio Phone....139
F. Navigation System....141
F.1. Furuno 1934C/NT Radar/Plotter System....143
F.2. Furuno RD30 Remote Display....147
F.3. Differential Global Positioning System (DGPS)....151
F.4. Ritchie Voyager Magnetic Compass....155
F.5. Furuno PG500R Heading Sensor....157
F.6. Depth Sounder System....159
F.7. NAVPILOT-500 Autopilot System....161
F.8. Navigator Forward Looking Infrared (FLIR) System....163
F.9. Ethernet Hub....165
G. Electrical System....167
G.1. Generators....169
G.2. Batteries....
G.3 Battery Controls....179

Draft
Further dissemination only as directed by Commandant (CG-937) or higher Coast Guard authority.

G.4 Battery Chargers....181
G.5 DC-DC Converters....185
G.6. 120/240 VAC Power Distribution Panel....189
G.7. 120 VAC Shore Power Panel....193
G.8. 24-VDC Distribution Panels....195
G.9. 12-VDC Distribution Panels....199
H. Fire Extinguishing Agents....201
H.1. Fixed Fire Extinguishing System....203
H.1.1. Fixed Fire Extinguishing System - Nitrogen Pilot Cylinder....207
H.1.2. Fixed Fire Extinguishing System - Pressure Switch....209
H.1.3. Fixed Fire Extinguishing System - Damper Control Valve....211
H.1.4. Fixed Fire Extinguishing System - Nitrogen Time Delay Cylinder....213
H.1.5.Fixed Fire Extinguishing System - FM-200 Agent Cylinder....215
H.1.6. Fixed Fire Extinguishing System - Lever Operated Control Head....219
H.1.7. Fixed Fire Extinguishing System - Lever/Pressure Operated Control Head....221
H.2. Portable Fire Extinguisher....223
I. Damage Control Systems/Equipment....225
I.1. Fire/Bilge Standpipe....227
I.2. Electric Bilge Pump System....229
J. HVAC Systems....233
J.1. Machinery Space Ventilation....235
J.2. Non-Machinery Space Ventilation....237
J.3. Air Conditioning Systems....239
J.4. HVAC Cooling Water System....243
J.5. Electric Heating....239
J.6. Window Defroster....251
K. Weapons Mounting/Stowage....253
K.1. Pedestal Stands....255
K.2. Ammunition Stowage....257
K.3. Weapon Locks/Mounts....259
L. Hull Exterior Lighting....261
L.1. Jabsco Searchlights....263
L.2. Jabsco Floodlights....265
L.3. Navigation Lights....267

Draft
Further dissemination only as directed by Commandant (CG-937) or higher Coast Guard authority.

L.4. Low Level Lights.... 269
M. Ancillary Systems and Furnishings.... 271
M.1. Windshield Wipers and Washer System.... 273
M.2. Sewage System.... 277
M.3. Freshwater System.... 279
M.4. Seating System.... 281
M.5. First Aid Kit.... 285
M.6. Internal Lights.... 287
M.7. Emergency Position Indicating Radio Beacon.... 289
M.8. Sacrificial Zinc Anodes.... 291
M.9. CCTV (Engineroom Camera).... 293
M.10. Kahlenberg Low Pressure Air Compressor.... 295
CHAPTER 4 CREW REQUIREMENTS.... 299
Crew Requirements Introduction.... 299
Section A. Minimum Crew.... 301
Section B. Coxswain.... 303
Section C. Engineer.... 305
Section D. Crew Members.... 307
Section E. Passengers.... 309
Section F. Training.... 311
Section G. Safety Equipment.... 313
CHAPTER 5 OPERATIONAL GUIDELINES.... 315
Operational Guidelines Introduction.... 315
Section A. Operating Parameters.... 317
Section B. Performance Data.... 323
Section C. Performance Monitoring.... 325
CHAPTER 6 MISSION PERFORMANCE.... 329
Mission Performance Introduction.... 329
Section A. Starting Procedures.... 331
Section A.1. Mission Pre-Start.... 333
Section A.2. Engine Pre-Start.... 335
Section A.3. Engine Starting.... 337
Section A.4. Control Station Test.... 339
Section A.5. Energizing Equipment.... 341

Draft
Further dissemination only as directed by Commandant (CG-937) or higher Coast Guard authority.

Section B. Underway....343
Section C. Handling Characteristics.... 345
Section C.1 Maneuvering....347
Section C.2 Turning and Pivoting.... 357
Section C.3. Head Seas....359
Section C.4. Stern to Seas....361
Section C.5. Beam Seas.... 363
Section C.6. Following Seas.... 365
Section C.7. Effects of the Wind....367
Section C.8. Station Keeping....369
Section C.9. Operating in Shallow Water....371
Section D. Going Alongside Vessels of Interest.... 373
Section E. Ice Conditions....377
Section F. Personnel in Water.... 379
Section G. Operating with Helicopters....381
Section H. Anchoring....383
Section I. Towing and being Towed....385
Section J. Securing Procedures.... 391
Section J.1. Engine Securing....393
Section J.2. De-energizing Equipment....395
Section J.3. Post Mission Securing....397
Section K. Long Term Storage.... 399
CHAPTER 7 EMERGENCY/CASUALTY CONTROL PROCEDURES.... 401
Emergency/Casualty Control Procedures Introduction....401
Section A. Emergency Procedures....403
Section A.1. Capsizing....405
Section A.2. Collision.... 409
Section A.3. Accidental Grounding - Collision with a Submerged Object....411
Section A.4. Flooding (Underway)....413
Section A.5. Flooding (In Port)....
Section A.6. Carbon Monoxide Alarm.... 417
Section A.7. Personnel in Water....419
Section A.8. Fire in the Engine Room.... 421
Section A.9. Fire (Non-Engine Room Spaces)....

Draft
Further dissemination only as directed by Commandant (CG-937) or higher Coast Guard authority.

Section A.10. Shelter-In-Place.....425
Section B. Casualty Control Procedures.....427
Section B.1. Loss of Engine Speed Control.....429
Section B.2. Loss of Fuel Oil Pressure.....431
Section B.3. Loss of Engine Lube Oil Pressure.....433
Section B.4. High Engine Coolant Temperature.....435
Section B.5. High Exhaust Outlet Temperature.....439
Section B.6. Loss of Reduction Gear Oil Pressure.....441
Section B.7. High Reduction Gear Oil Temperature.....443
Section B.8. Loss of Clutch Control.....445
Section B.9. Fouled Waterjet.....447
Section B.10. Loss of Waterjet Control (Electrical).....451
Section B.11. Loss of Waterjet Control (Hydraulic).....453
Section B.12. Loss of Generator.....455
Section B.13. Loss of Electrical Control Unit.....457
Section B.14. Loss of Battery Bank.....459
Section B.15. Unusual Noise or Vibration in Powertrain.....461
Section B.16. Communication/Navigation Systems Power Failure.....463

Appendix A. Outfit and Stowage Plan.....465
Appendix B. Engineering Changes.....471
Appendix C. Disabling Casualties.....473
Appendix D. Restrictive Discrepancies.....477
Appendix E. Major Discrepancies.....
Appendix F. Full Power Trial.....483
Appendix G. List of Acronyms.....485

Draft
Further dissemination only as directed by Commandant (CG-937) or higher Coast Guard authority.

CHAPTER 1 INTRODUCTION

Overview

Introduction

This handbook contains information necessary for the safe and efficient operation of the 45FT Response Boat – Medium. It defines operational capabilities, limitations and emergency procedures. In addition it shows or describes the fittings, outfit lists, and physical characteristics of the boat.

This chapter contains the following sections:

- Warnings, Cautions, and Notes
- Facility Manager
- Changes
- Action

Draft
Further dissemination only as directed by Commandant (CG-937) or higher Coast Guard authority.

Draft
Further dissemination only as directed by Commandant (CG-937) or higher Coast Guard authority.

A. Warnings, Cautions, and Notes

Introduction

The following definitions apply to Warnings, Cautions, and Notes found throughout the handbook.

Warning

WARNING	Operating procedures or techniques that must be carefully followed to avoid personal injury or loss of life.
CAUTION !	Operating procedures or techniques that must be carefully followed to avoid equipment damage.
NOTE	An operating procedure or technique essential to emphasize.

Draft
Further dissemination only as directed by Commandant (CG-937) or higher Coast Guard authority.

Draft
Further dissemination only as directed by Commandant (CG-937) or higher Coast Guard authority.

B. Facility Manager

Introduction

Commandant (CG-731), the Office of Boat Forces, is the facility manager for the 45FT RB-M. The 45FT RB-M is a standard boat as defined in the Boat Management Manual, COMDTINST M16114.4 (series), and the Naval Engineering Manual, COMDTINST M9000.6 (series). The Boat Forces & Cutter Operations Branch, located at the USCG Training Center Yorktown, through the Standardization (STAN) Team, provides expertise in all aspects of the 45FT RB-M's operation and maintenance. The STAN Team reviews the boat, its equipment, crew procedures, operational reports (CASREPS, AOPS/TMT, etc.), and technical manuals continuously to update the information in this handbook.

Draft
Further dissemination only as directed by Commandant (CG-937) or higher Coast Guard authority.

Draft
Further dissemination only as directed by Commandant (CG-937) or higher Coast Guard authority.

C. Changes

Introduction	Commandant (CG-731) promulgates this handbook and its changes. Submit recommendations for changes to Commandant (CG-731) via standard memo or electronic mail. For more information, contact Commandant (CG-731), 45FT RB-M Facility Manager. The address for Commandant (CG-731) is: Commandant (CG-731) U. S. Coast Guard Headquarters 2100 Second Street, SW Washington, DC 20593-0001 Attn: RB-M Class Facility Manager
Engineering Changes (EC)	All Engineering Changes (EC) issued since the 45FT RB-M has been in service are provided in Appendix B. ECs approved after the promulgation of this handbook supersede information in the 45FT RB-M Operator's Handbook, where applicable.

Draft
Further dissemination only as directed by Commandant (CG-937) or higher Coast Guard authority.

Draft
Further dissemination only as directed by Commandant (CG-937) or higher Coast Guard authority.

D. Action

Introduction	Operating, supervisory, and maintenance support commands and boat crews will comply with the procedures and limitations specified in this publication and any duly issued changes.
Configuration Control	Configuration control for the 45FT RB-M is critical for standardization of equipment and safety of operations. The boat's speed, performance and range characteristics are extremely sensitive to excess weight.

NOTE

To maintain fleet wide standardization, unit commanders shall not change or vary the type or location of equipment carried except where noted. Design or structural alterations are prohibited unless specifically authorized by the RB-M Configuration Control Board Chairman (CG-937 IAW the RB-M Configuration Control Charter).

NOTE

Prototype testing of 45FT RB-M configuration changes may only be carried out with the specific authorization of the RB-M Project Manager, Commandant (CG-937). Under most circumstances, prototype testing is done at the RB-M Prime Unit as designated by the Office of Boat Forces, Commandant (CG-731).

Draft
Further dissemination only as directed by Commandant (CG-937) or higher Coast Guard authority.

Draft
Further dissemination only as directed by Commandant (CG-937) or higher Coast Guard authority.

Boat Characteristics Introduction

Introduction

This chapter describes standard features for RB-M Class boats. The general location of the major hull and system components is presented in this chapter. Detailed information about hull and system components is provided in Boat Systems Introduction.

NOTE

All illustrations and photographs in this operator's handbook are for familiarization only. The location of hull fittings and system components in these illustrations may not accurately reflect proper placement and installation on all hulls.

NOTE

Where differences exist between the RB-M, they are specifically identified in the text by hull designation.

This chapter contains the following sections:

- General Description
- Compartments
- Main Deck Equipment
- Main Deck Stowage

Draft
Further dissemination only as directed by Commandant (CG-937) or higher Coast Guard authority.

Draft
Further dissemination only as directed by Commandant (CG-937) or higher Coast Guard authority.

A. General Description

Design

The RB-M is designed by Camarc LTD. Of Sussex, England. Camarc has incorporated design criteria from other successful hi-speed aluminum water jet boats currently in operation.

Manufacturer

The manufacturer of the 45’ RB-M is Marinette Marine Corporation of Marinette, Wisconsin, in coordination with Kvichak Marine Industries of Seattle, Washington.

Missions

The RB-M is an aluminum, self-righting, high-speed, multi-mission capable boat, operable from Coast Guard shore stations. The RB-M is able to respond rapidly to Coast Guard missions, or conduct planned patrols and training. The primary roles of the RB-M are:

1. Search and Rescue.
2. Recovery of persons from the water.
3. Transfer of persons and equipment from boat to boat.
4. Towing of disabled craft.
5. Transfer of persons to and from Coast Guard helicopters.
6. Medical assistance.
7. Fire fighting and rescue assistance.
8. Recreational Boat Safety (RBS).
9. Marine Environmental Protection (MEP).
10. Enforcement of laws and treaties (ELT).
11. Port Security and Safety (PSS).
12. Defense Operations/Contingency Preparedness (DO).

Boat Specifications

The following provides a list of all 45’ RB-M boat specifications:

Physical characteristics

Hull Length	43’9” (w/o fenders)
Length Overall	44’9” (w/ fenders)
Hull Beam	13’8” (w/o fenders)

Draft
Further dissemination only as directed by Commandant (CG-937) or higher Coast Guard authority.

Beam Overall	14’8” (w/ fenders)
Freeboard	
Bow	4’9”
Amidships	1’11” (Rescue Recess)
Aft	2’11”
Draft	3’ 4”
Highest Points:	
Mast Up	20’8.25”
Mast Down	13’1”
Engines	Twin Detroit Diesel Series 60, In-line six cylinder, 4-cycle electronically controlled (DDEC) Engines
Rated Horsepower	825 BHP at 2300 RPM
Reduction Gear	Two Twin-Disc MG-5114-SC, 1.02:1 reduction ratio
Fuel Type	Diesel
Fuel Capacity	
100%	520 GAL
95% (usable)	495 GAL
Electrical Generation	Two Auragen VIPER Induction Power Source (IPS) Generators, Belt driven by the diesel Engines, providing 240/120 VAC and 24 VDC power, Regardless of engine speed.
Jet Drives	Two Kamewa Rolls Royce FF Series 375 S Water Jets
Displacement	
Hoisting condition	36,700 LBS
(boat, full fuel, outfit; no crew or cargo)	
(Hoisting condition + 4 crew members @ 210 LBS ea)	

Draft
Further dissemination only as directed by Commandant (CG-937) or higher Coast Guard authority.

Trailer Information	The 45’ RB-M was not designed for transport on a boat trailer. Over-the-road delivery should be performed by a licensed commercial shipping company.
Potable Water Capacity	5 GAL

Operating Characteristics and Parameters

Maximum Personnel (including crew)	24 (210 LBS each)
Maximum Seas, Operations	8’
Maximum Seas, Survivable	12’
Maximum Winds, Operations	30 KTS
Maximum Winds, Survivable	50 KTS
Range (@ 30 KTS in Calm Water)	250+ NM
Maximum Operating Distance from Shore	50 NM
Maximum RPM	2300 RPM
Maximum Speed	40+ KTS
Cruising RPM	1800 RPM
Cruising Speed	30 KTS
Towing Capacity	100 Displacement Tons
Ice Breaking Capability	Thin surface ice and slush to idle speeds

NOTE

Unit commanders shall comply with the minimum boat crew requirements when dispatching boats for Coast Guard operations in accordance with Volume I of the U.S. Coast Guard Boat Operations and Training (BOAT) Manual, COMDTINST M16114.32 (series). See Chapter 4 of this handbook for additional Crew Requirements.

Draft
Further dissemination only as directed by Commandant (CG-937) or higher Coast Guard authority.

NOTE

Feedback from the Original Equipment Manufacturer indicate that environmental temperatures for human endurance will be reached long before environmental temperatures adversely impact the mechanical functioning of the 45' RB-M. Unit and operational commanders shall perform a thorough risk assessment in accordance with the Coast Guard's Operational Risk Management Instruction, COMDTINST M3500.3 (series), when deploying the 45' RB-M in adverse weather conditions.

Superstructure

The boat's superstructure is made of aluminum alloy type 5083-H116 and contains the Pilothouse and the overhead for the Survivors' Compartment. It is fixed to the hull between Frame 6 (aft) and Frame 14 (forward). The mast base assembly is attached to the superstructure at Frame 6 and Frame 8. The radar antenna and fold down mast are connected to the mast base assembly.

Draft
Further dissemination only as directed by Commandant (CG-937) or higher Coast Guard authority.

B. Compartments

General Arrangement

The RB-M is constructed with four watertight bulkheads. The transverse Frames are numbered 0 through 17 with Frame number 0 at the transom.

- Forepeak: Frame 14 to Bow.
- Survivors' Compartment: Frame 10 to Frame 14.
- Auxiliary Machinery Compartment: Frame 7 to Frame 10.
- Engine Room: Frame 2 to Frame 7.
- Lazarette: Transom to Frame 2.
- Pilothouse: Frame 6 to Frame 10 above the Main Deck.
- Head: Frame 11 STBD Side.

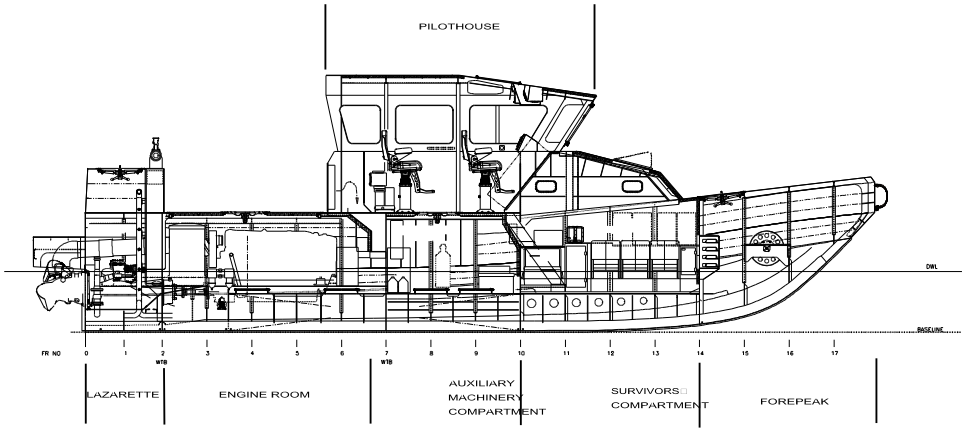

COMPARTMENTS

Figure 1

Forepeak

The forepeak is a watertight compartment accessed through a 24" diameter round watertight hatch on the main deck, just forward of Frame 14. A ladder provides safe entry. This compartment contains a hand-operated reel for anchor rode stowage. The spool contains 300' of 2 3/4" circumference double braided nylon line, with one end spliced into a thimble and shackled to nine feet of stainless steel chain. During anchoring evolutions the anchor rode is routed to the main deck through the hawsepipe. The anchor hawsepipe quick coupling has a J-Hook to attach the anchor line shackle to the coupler. Four portable fenders and mooring lines are also stowed

Draft
Further dissemination only as directed by Commandant (CG-937) or higher Coast Guard authority.

in this compartment. A bilge pump is located at Frame 14 under the ladder and deck grating. The following items are secured and hang from a bar extending from the overhead on both sides of the ladder in the Forepeak:

- Small Drogue
- 200' line stowed in a flotation bag
- Mooring lines
- Skiff hook with DBN line
- Fenders with heaving lines

The compartment has a locally switched dome light.

Survivors' Compartment

The Survivors' Compartment is accessed through the door in the forward bulkhead of the pilothouse above Frame 10. The door leading form the pilothouse into the survivor compartment is not watertight but only in place to block light shining up into the pilothouse. The overhead hatch is a quick acting single lever, 24x24 watertight hatch with acrylic glazing. The hatch is secured with four dogs and is located between Frames 12 and 13. The forward and aft bulkheads are watertight bulkheads (Frames 10 and 14). The deck plates and the latching mechanisms consist of four removable deck plates that have two mechanical latches per deck plate and a jointer plate that slides under the deck frame support to keep the plates in place. There is a ladder aft that can be folded up for access to the bilge, head cassette tank and tool box. The toolbox is secured by twin nylon straps. Hand holds are provided throughout the compartment.

Emergency Egress from the compartment is accomplished with a webbed egress ladder that is rolled up and secured to the overhead directly forward of the egress hatch. The ladder is unrolled and secured to the deck with quick acting cam locks for safe and stable egress through the overhead hatch.

The compartment has four portlights. The portlights do not open, have acrylic glazing and are constructed with a cast aluminum frame. The compartment has three fold-up seats on the port side and two on the starboard, all with safety belts. There are hand holds under each seat. A Damage Control Kit is stowed under removable deck plate 3. A spare parts box is stowed under removable deck plate #2 between frames 11 and 12; the box is secured to the frame by nylon straps.

The bilge pump can be accessed under the compartment ladder through a removable deck plate in the cabin sole at Frame 11. The ladder is hinged and easily raised and secured in the upright position to access the removable deck plate. The remainder of

Draft
Further dissemination only as directed by Commandant (CG-937) or higher Coast Guard authority.

the bilge space can be accessed by three removable deck plates located in the sole at Frames 11.25, 12.25 and 13.25.

The Heating, Ventilation and Air Conditioning (HVAC) unit for this compartment is located behind the forward seat on the starboard side. The HVAC control for this compartment is located on the port side in the galley area.

There is a two-door locker used for boat outfit stowage on the starboard side forward of the two folding seats at Frame 14. The locker has the following gear stored inside: two blankets, two pillows, swimmer harness with 70' line, push button signal horn with spare bottle of air, personnel retrieve strap, P6 firefighting 50' hose with hose coupling, fire nozzle, 10 person first aid kit and emergency portable steering and control box w/power cord.

The ammunition locker is located above the starboard folding seats, forward of the head at Frame 11.5. The locker is equipped with a locking door and contains four M19A1 ammo containers for ammunition. There is also a Pyrotechnics Stowage Container located at frame 14 forward, in the upper port side locked cabinet forward of the port folding seats, for flare stowage.

The locker for the Boat Crew Survival Vests is forward of the port seats. The locker contains four Boat Crew Survival Vests.

Fire Extinguishers are secured in brackets on frame 11 forward and on the outside the head jointer bulkhead between the folding seats and bulkhead and under the grounding wand and clip for helo operations.

A galley is located on the port after side of the Survivors' Compartment. The galley contains a five-gallon portable water cooler and a sink that drains through a check valve above the water line. A microwave capable of heating single serving drinks and meals is located next to the sink at bulkhead 10. Under the microwave, mounted onto the deck is a 36 gallon portable cooler secured to brackets by nylon straps. A portable hand held searchlight is stowed in the cabinet under the sink and is secured to the shelf by nylon straps. The portable searchlight is rechargeable and is connected to the 110v outlet plug next to the microwave. The galley contains a paper towel dispenser, a sealed trashcan, a flashlight and additional storage. Crew communications connection point and climate control controls panel are mounted on the port side above the sink area.

The windshield wiper fluid tank is mounted on the portside, next to the ladder on bulkhead 10 in the after area of the compartment. The HF Radio secure

Draft
Further dissemination only as directed by Commandant (CG-937) or higher Coast Guard authority.

communications component (KY-99) is located in an enclosed box with a lock for security.

The Survivors' Compartment provides a space that is protected from the weather and for administering first aid. The Coast Guard Lifesaver Kit is stowed on the forward bulkhead (bulkhead 14) on centerline. A stokes litter and medivac board (stored in halves) is secured to the top of the starboard storage cabinet with nylon straps. The crew communications system jack is located so a crewmember can maintain radio communications with shore while performing medical assistance.

Head

The head compartment is located on the starboard side of the Survivors' Compartment with a door for privacy. The head is a permanently installed unit with a removable cassette type holding tank. The compartment includes an exhaust fan that takes air from the Survivors' Compartment and Head and routes it overboard. The head has a toilet paper holder, a small trash receptacle with a sealed top and a tissue paper dispenser. Additional items stowed in the head compartment include helmets, goggles, heavy weather belts, five Type I Adult Lifejackets and two Type I Child Lifejackets, wipes, toilet paper, paper towels and towing stowage container. All gear is stowed behind orange cargo straps to prevent flying gear while underway.

Auxiliary Machinery Compartment

The Auxiliary Machinery Compartment is a watertight compartment accessed through a non-watertight 24”x24” hatch in the centerline of the Pilothouse between Frames 8 and 9. The space is bound by an overhead that forms the pilothouse sole and outboard by the rescue recesses. The compartment has cross-flow ventilation with a powered fan and is vented into the Engine Room. The compartment contains four batteries that are enclosed in battery boxes secured to aluminum brackets. Other items in the auxiliary machinery compartment are the FM200 fire suppression system components, the air horn compressor, battery charger, and various electrical panels. In the center of this compartment is the forward top of the fuel tank, which has two Tiona style hatch covers with a band clamping mechanism for tightness and for access to the tank. The fuel tank fill and vent lines are located in the auxiliary machinery compartment. The two bilge pumps for this compartment are located at Frame 7, on the outboard sides of the fuel tank.

Engine Room

The Engine Room is a watertight compartment accessed through a 24x24 square, hinged cast aluminum watertight hatch. The centerline Engine Room access hatch is located at frame 4. Steps provides access from the hatch to the Engine Room. The Engine Room can be monitored remotely from the Pilothouse using the CCTV system.

Draft
Further dissemination only as directed by Commandant (CG-937) or higher Coast Guard authority.

This Engine Room may also be accessed from the main deck through three engine hatches. Each engine hatch is fitted with ten flush, adjustable dogs to provide a watertight seal, and gas struts to assist in opening and closing the hatch. The center section of the aft deck is removable. Water is drained away from the hatch coaming by drains that lead to the overboard discharge openings at the upper edge of the hull fendering. The center hatch hinges forward, and both the port and starboard hatches hinge outboard. These hatches have a 3000 pound maximum uniform load limit.

The Engine Room is vented with two 11-inch fans. The engine room intake vents are located port and starboard on the aft face of the pilothouse. The fans extract hot air and pull outside ambient air into the space. The outlet ducts are located on the outboard sides of the lazarette access trunk.

This Engine Room contains two diesel engines, two reduction gears, main engine exhaust and lift mufflers, fuel and water piping, fuel filter assemblies, and the Auragen Induction Power Sources (IPS). Other contents of this compartment include bearing housing and hydraulic pumps for the water jets. The hydraulic tank is located on the port side of the engine room between frames 5 and 6. The walk space between the main engines is the top of the fuel tank with two bolt-on Tiona type hatch covers for access to the tank. The tank is fitted with the supply and return lines, and a fuel stripping tube. The fuel tank lines have emergency shut off valves on the supply lines and check valves on the return lines. The stripping line has a cap, but no valve. The bilge pump for the Engine Room is located just forward of Frame 3.

Lazarette

The lazarette is a watertight compartment located between Frames 0 and 2. This space is accessed through a 24” diameter, hinged cast aluminum watertight hatch atop the lazarette trunk. Entry is by way of a vertical ladder that doubles as standpipe for the engine room dewatering standpipe and P6 seawater suction standpipe. The venting of this compartment is by two vents for cross-flow ventilation. They are gooseneck vents with a ball check to prevent water intrusion. Stowed inside the lazarette box on a bar, starboard side, are two heaving line bags (100’ Line) and aft, a six foot P6 standpipe connection hose (the third heaving line bag hangs on the handrail aft of the pilothouse).

This compartment contains two Kamewa FF-375S water jets with associated hydraulic manifolds, proportional valves, steering ram, bucket rams and Interceptor rams. The aft portion of the engine exhaust pipes run through this compartment and exit through the transom.

Draft
Further dissemination only as directed by Commandant (CG-937) or higher Coast Guard authority.

The sea chest, sea chest vent, main engine raw water valves, de-icing valves, HVAC raw water strainer, and propulsion raw water duplex strainers are located in this compartment. The location of the bilge pump is at Frame 2.

Draft
Further dissemination only as directed by Commandant (CG-937) or higher Coast Guard authority.

C. Main Deck Equipment

Opening Chock	The opening chock located on the bow is used for fairleading anchor or tow lines. It has a quick-acting pin to open the chock.
Anchor Line Bitt/ Anchor	The anchor line bitt located just aft of the opening chock is used when anchoring, or if the RB-M is being towed. The anchor post is located at frame 17. A hawsepipe is used to route the anchor line from the forepeak to the deck. The hawsepipe is located underneath the tripod gun mount and has a cam lock cap secured by a lanyard to keep it watertight when not in use.
Gun Mounts	A tripod weapon stand is bolted to the deck just forward of Frame 15 to support the M240B Light Machine Gun. The towing bit at Frame 2 provides a mounting surface for the second MM240B Light Machine Gun mount. Both gun mount positions provide a maximum line of fire around the perimeter of the RB-M.
Handrails/ Heavy Weather Attachment Points	Hand and grab rails are located on bow decks, cabin sides, transom platform, and afterdecks port and starboard. Heavy weather attachment points for securing heavy weather safety belts are located on approximately three foot intervals along the hand rails.
Mooring Bitts/Side Chocks	Four 3.5-inch mooring bitts are located along each side of the boat at Frames 1, 4, 11, and 16. Four closed side chocks with a 4.5-inch opening are located between the mooring bitts at Frames 2, 3, 12, and 15.
Tow Reel/Tow Bitt/Tow Line Stop	The towing reel is located on the starboard after deck adjacent to the lazarette trunk. The reel is outfitted with 600 feet of 2 3/4-inch circumference double braided nylon line. The reel is readily accessible to the towing bitt. The tow line reel handle is removable and is normally stowed in a pocket behind the crew seats in the Pilothouse. The tow bitt is located center of the aft main deck atop the lazarette trunk structure. The top of the tow bitt contains the gun mount.

Draft
Further dissemination only as directed by Commandant (CG-937) or higher Coast Guard authority.

The handrails around the aft deck are reinforced to accept loads induced by the towline. Towline stops are provided outboard of the towing bitt to prevent the towline from moving forward of the beam.

Rescue Recess/ Side Deck Grating

The rescue recesses located between Frames 6 and 9 port and starboard are designed for transferring or retrieving items or persons from the water, (able-bodied, unconscious or deceased). The location is within sight of the boat operator.

The fiberglass side deck grating may be secured in the up position during water rescue or in the down position to provide crewmembers a safe walkway over the recess area. The grating is secured by stainless steel pins on each end in both the up and down positions.

The Rescue Recess has two flush mounted low-level lights. The handrail has four D-rings to clip crew safety heavy weather belts. The Rescue Recess has three open 3”x5” de-watering ports. Crew must beware of small items that can be washed overboard through the de-watering ports.

Stern Platform

A secondary recovery position is provided by the stern platform located above the water jet buckets. Access to the stern platform from the aft deck is through an opening in the handrail with steps on the starboard side. The stern platform provides safety harness attachment points in a hand rail.

NOTE

Prior to departing the aft deck to the stern platform, the crewmember shall communicate with the coxswain his intentions. Crewmembers working from the stern platform in the kneeling position can not be seen by the coxswain. The Crew Communication System should be used in this situation.

The platform has two hatch covers that allow access and inspection of the water jet bucket and steering nozzle assembly as well as the grease fitting on top of the waterjet.

Fueling Station

A fueling station is located on the starboard side of the main cabin, above Frame 9. The fuel fill and vent piping is sized and located such that water contamination

Draft
Further dissemination only as directed by Commandant (CG-937) or higher Coast Guard authority.

	during fueling is avoided, and spills are contained. The fueling station has a pocket with a drain plug to collect spilled fuel.
Boat Hooks	Two eight-foot collapsible boat hooks are stowed in brackets on each side of the cabin.
P-6 Pump	A USCG-P6 salvage pump used for de-watering and firefighting is located on the port side of the lazarette trunk. The pump is stored in a pump can with the can secured to the deck. When the pump is operational, it is secured to the deck forward of the towing bitt. The suctions for the pump are located on the port side of the lazarette trunk. Two separate suction connections allow either de-watering of the engine compartment or taking suction from the sea chest for fire fighting. Refer to the Champion fire pump operators technical manual for operation, maintenance and repair instructions.
Deck Lighting	The deck lights for the RB-M are controlled from the primary crew console. 10-LED low intensity lights illuminate the port and stbd rescue recesses, aft port and stbd pilothouse, port and stbd lazarette, and the port and stbd swim steps for the transom.
Life Rings	The life rings, Marker Distress Lights, and throw bags are located on the aft deck, mounted on the outward side of the handrails, port and starboard sides.
Shore Tie	The electrical shore tie connection is located in the port side rescue recess at Frame 8. The shore tie connection is rated for 100 amps at 120 VAC.

Draft
Further dissemination only as directed by Commandant (CG-937) or higher Coast Guard authority.

Draft
Further dissemination only as directed by Commandant (CG-937) or higher Coast Guard authority.

D. Pilothouse

Introduction

The Pilothouse is the main control station for all RB-M maneuvering, navigation and communication systems. The design provides for an enclosed 360 viewing in all directions for visual monitoring during all missions. The Pilothouse also provides support for the mast, radar, communication antennas and ancillary equipment to support mission requirements. The Pilothouse has the following:

1. Windows
2. Doors
3. Operating Stations
4. Crew Seating

Pilothouse Windows

The Pilothouse has 13 windows. The three forward facing windows are heated glass with heater controls located at the Primary Crew Console. Each forward facing window has wipers and wash nozzles controlled from the Lower Navigator and Lower Helm Consoles. The two overhead windows are located directly above the Navigator and Helm seats. There are six stationary windows in the Pilothouse:

1. Aft Port Window
2. Port Aft Side Window
3. Port Center Side Window
4. Aft Starboard Window
5. Starboard Aft Side Window
6. Starboard Center Side Window

There are two sliding windows adjacent to the Navigator and Helm seats. The side and aft windows, except for the Pilothouse Door, are fitted with 24-VDC Defrosters to help control condensation. The sliding windows are manually opened or closed by the operator. When fully closed and locked, an air seal is pressurized from the compressed air system to prevent flooding in a rollover situation. Each window is fitted with a manual deflator valve to depressurize the air seal.

Pilothouse Doors

The Pilothouse has a set of non-tight doors for access to the Survivors' Compartment. The doors are hinged to swing out into the Pilothouse and can be secured in the open

Draft
Further dissemination only as directed by Commandant (CG-937) or higher Coast Guard authority.

position with door catches. The doors are also fitted with door latches to secure the doors when they are closed. Each door has a round window port.

The Pilothouse also has a QAWT Door located in the aft bulkhead. The door swings out to the main deck and can be secured in the open position with a door catch. The door handle rotates the door dogs to compress the watertight gasket or release pressure on the gasket. The door has a stationary window.

Operating Stations

There are three main operating stations in the Pilothouse. These operating stations control and monitor functions of the boat during missions at six control consoles are:

1. Lower Helm Console
2. Upper Helm Console
3. Lower Navigator Console
4. Upper Navigator Console
5. Upper Center Console
6. Primary Crew Console
7. AC Power Island

Lower Helm Console

The Lower Helm Console is located on the forward starboard side of the Pilothouse behind the starboard windshield. The console has monitoring and controls for the following:

1. Helm Chart Plotter
2. Wiper/Washer Controls
3. Searchlight Controls
4. Air Horn
5. Law Enforcement Lights
6. FLIR Camera
7. RD-30 Display
8. NAVPILOT-500 Auto Pilot Control Head
9. Magnetic Compass

Draft
Further dissemination only as directed by Commandant (CG-937) or higher Coast Guard authority.

10. VHF Radio Control Head
11. VHF Radio Microphone
12. Loudhailer Microphone
13. Portable Backup Console Connection

The console is hinged to open aft and has two (2) locking latches for access to internal components and connections.

Upper Helm Console

The Upper Helm Console is located on the forward starboard side of the Pilothouse in the overhead above the Lower Helm Console. The console has monitoring and controls for the following:

1. Main Engine Start and Stop Pushbuttons
2. Navigation Lights
3. RD-30 Display
4. LH-3000 Loudhailer
5. Clutch Control Panel
6. External Alarm Relay Control Switch
7. VHF Radio Speaker (forward side)

The console is hinged to open down and has two (2) locking pins for access to internal components and connections.

Lower Navigator Console

The Lower Navigation Console is located on the forward port side of the Pilothouse behind the port windshield. The console has monitoring and controls for the following:

1. Navigator Radar Plotter Display
2. Wiper/Washer Controls
3. Searchlight Controls
4. Searchlight Control Selector Switch
5. Air Horn

Draft
Further dissemination only as directed by Commandant (CG-937) or higher Coast Guard authority.

6. Law Enforcement Lights
7. FLIR Camera
8. Secure Communications Handset
9. VHF Radio Telephone Transceiver
10. VHF Radio Telephone Microphone
11. UHF Radio Control Head
12. UHF Radio Microphone
13. HF-SSB Radio Microphone

The console is hinged to open aft and has two (2) locking latches for access to internal components and connections.

Upper Navigator Console

The Upper Navigator Console is located on the forward port side of the Pilothouse in the overhead above the Lower Navigator Console. The console has monitoring and controls for the following:

1. Floodlights
2. HF-SSB Radio Control Head
3. GPS Transceiver
4. Radio Direction Finder Receiver
5. Clutch Control Panel
6. Secure Communications Speaker (forward side)

The console is hinged to open down and has two (2) locking pins for access to internal components and connections.

Upper Center Console

The Upper Center Console is located in the overhead between the Upper Navigator and Upper Helm Consoles. The console has monitoring and controls for the following:

1. EDM (2)
2. LCD Alarm Display Panel

Draft
Further dissemination only as directed by Commandant (CG-937) or higher Coast Guard authority.

3. Alarm Indicator
4. Alarm Buzzer
5. UHF Radio Speaker (forward side)
6. HF-SSB Radio Speaker (forward side)
7. RDF Speaker (forward side)

The console is hinged to open down and has two (2) locking latches for access to internal components and connections.

Primary Crew Console

The Primary Crew Console is located on the starboard side of the Pilothouse aft of the helm seat. The console has monitoring and controls for the following: Upper Section:

1. EDM (2)
2. Diesel Engine Emergency Stop Switches (2)
3. Fuel Gauge
4. Pilothouse Vent Fan Control Switch
5. FLIR/Engine Room Camera Select Switch
6. Battery Control Switches
7. Chart Plotter
8. Auragen ICS Control Panel (2)

Lower Section:

1. Pilothouse Lights
2. Low Level Lights
3. Instrument Lights
4. Windshield Heaters (Port/Center/Stbd)
5. ER Exhaust Fan Auto/Man Control Switch
6. Window Defrosters (6)
7. Bilge Pump Control Switches and Indicators (6)
8. Hull Anode Corrosion Meter

Draft
Further dissemination only as directed by Commandant (CG-937) or higher Coast Guard authority.

Inboard Side Section:

1. DC Buss Voltage Meters (4)
2. DC Power Distribution Panel
3. Low Level Red Lighting (2)

The console has front panels that can be removed for access to internal components and connections.

AC Power Island

The AC Power Island is located behind the Navigator's Seat at the Special Crew Position. The AC Power Island has monitoring and controls located on the inboard side for the following:

1. Ground Fault Detect Meter and Test Button
2. AC Buss Voltage Meters (2)
3. Bus Transfer Switches (2)
4. AC Power Distribution Panel
5. AC Power Outlet
6. Low Level Red Lighting

The island has front and rear access panels that can be removed for access to internal components and connections.

Crew Seating

The Pilothouse has individual seating for four crew members. The Stidd Seats are shock mounted with seat belts for crew safety. The Helm and Navigator seats are equipped with propulsion and steering controls (joystick, tiller, trim/roll joystick) for boat operations. Each chair is adjustable and has armrests that rotate up to allow for easy seat access and egress.

Draft
Further dissemination only as directed by Commandant (CG-937) or higher Coast Guard authority.

Seating Types		Position	Responsibility
Helm Chair	Forward Starboard chair	Coxswain	The helmsman has helm control, access to navigation equipment, and to VHF and Loudhailer communications equipment.
Navigator Chair	Forward Port chair	Navigator	The navigator has helm control, access to navigation equipment, and to UHF, HF and secure communications equipment.
Primary Crew Chair	Aft Starboard Chair	Engineer	The engineer has control and monitoring of ancillary boat systems and equipment.
Special Crew Chair	Aft Port chair	Crew Member	Both allow crew members a secure position with easy egress.

Pilothouse Weapons Stowage	The M16 Rifle and the Shotgun are secured in a Santa Cruz gun lock system in the after area of the Pilothouse on each side of the Pilothouse door and on top of the vent boxes.

Draft
Further dissemination only as directed by Commandant (CG-937) or higher Coast Guard authority.

Draft
Further dissemination only as directed by Commandant (CG-937) or higher Coast Guard authority.

E. Pilothouse Top

The Pilothouse top provides access to communication antennas, navigation lights, and other equipment. The Pilothouse top is accessible via the top of the Survivor's Compartment (avoid stepping on escape hatch). On top of the Pilothouse are two handrails for assisting personnel to gain access. Between the handrails are non-skid pads for better footing.

The Pilothouse top has four fixed floodlights placed forward, on each side and on aft of the mast foundation. The air horn is mounted on forward section of the top to port of the centerline. There are two non-opening windows located directly above the navigator and helm position for better visibility during turns, coming alongside larger ships, and for helicopter operations. The navigation lights are located forward of the windows and are shielded for appropriate recognition by other vessels.

The top center aft section of the Pilothouse has an aluminium foundation that holds the Furuno open array radar scanner, twin blue law enforcement lights, mast mount supports, loudhailer speaker, and the electrical junction box. The foundation is bolted to the top of the Pilothouse so it can be removed for transport. The foundation has two quick-acting inspection hatches to allow access to mounting hardware.

Draft
Further dissemination only as directed by Commandant (CG-937) or higher Coast Guard authority.

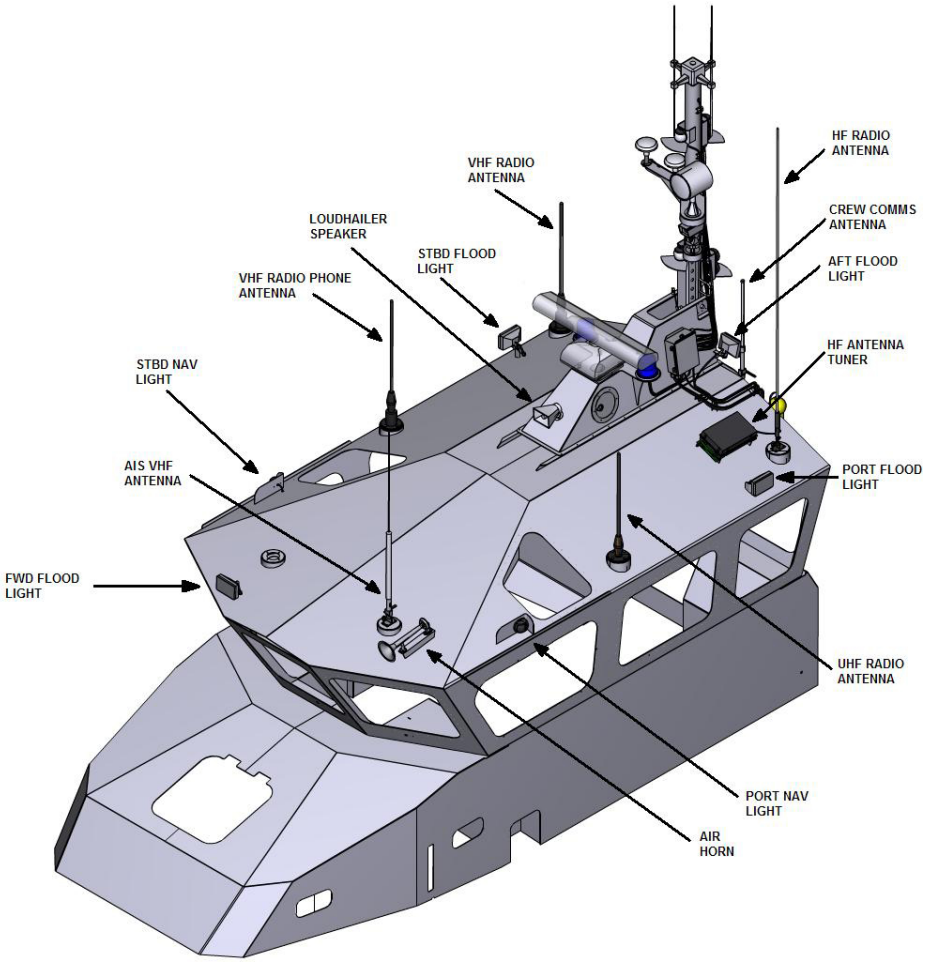

PILOTHOUSE TOP

Figure 1

Draft
Further dissemination only as directed by Commandant (CG-937) or higher Coast Guard authority.

F. Mast

The RB-M is equipped with a mast that can be lowered for navigation under low structures and can be removed for transporting the RB-M on a trailer. Mounted to the mast is the RDF antenna, DGPS antenna, anchor light, mast light, towing lights, remote control searchlight, remote control infrared camera, and a flag halyard.

The mast junction box assembly is attached to the side of the mast mounting base. Lowering of the mast may be accomplished by one or more persons. The locking handle located at the bottom of the mast is moved out of the locked position. The mast should be lowered using the boat hook with the installed gas strut as an assist. After the mast is horizontal, it can be secured with a light lanyard.

Navigation Standard Clearance is 13'1” minimum from the waterline (lowered). While in transit, the clearance for the mast in the raised position is 20'8 1/4” from the waterline.

Draft
Further dissemination only as directed by Commandant (CG-937) or higher Coast Guard authority.

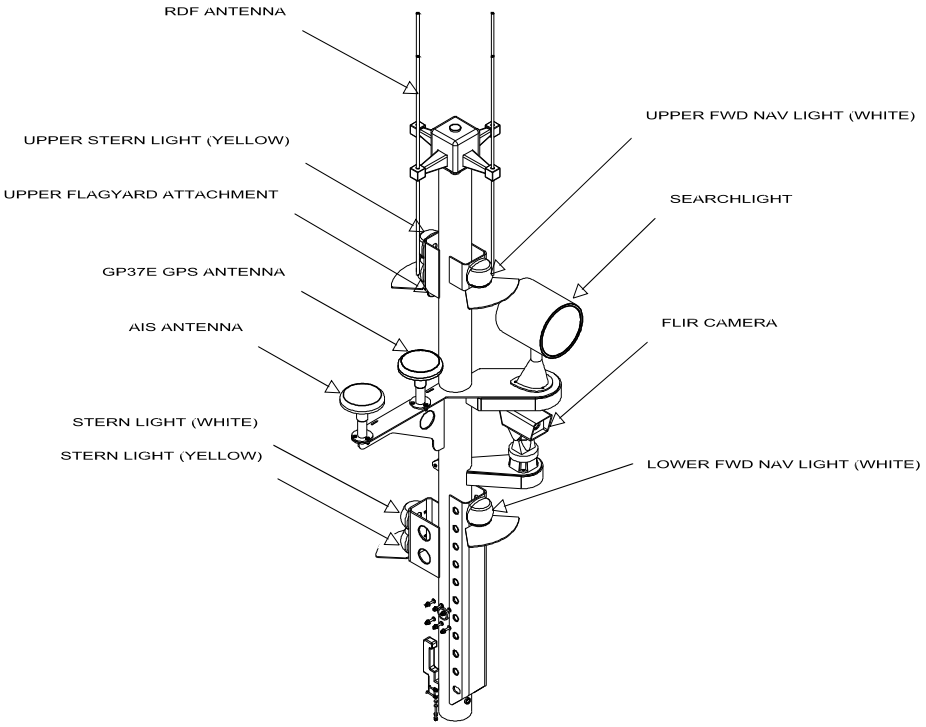

MAST

Figure 1

Draft
Further dissemination only as directed by Commandant (CG-937) or higher Coast Guard authority.

Boat Systems Introduction

Introduction

This chapter discusses the boat's mechanical, electrical, and manual operating systems. It describes basic characteristics and provides information to allow the boat's crew to operate effectively.

This chapter contains the following sections:

- Propulsion System
- Hull System
- Fendering System
- Steering System
- Propulsion Fuel Storage System
- Communications System
- Navigation System
- Electrical System
- Fire Extinguishing Agents
- Damage Control Systems/Equipment
- HVAC Systems
- Weapons Mounting/Stowage
- Hull Exterior Lighting
- Ancillary Systems and Furnishings

Draft
Further dissemination only as directed by Commandant (CG-937) or higher Coast Guard authority.

Draft
Further dissemination only as directed by Commandant (CG-937) or higher Coast Guard authority.

A. Propulsion System

The RB-M propulsion system consists of the following systems:

- Twin Detroit Diesel Series 60 engines with DDEC IV
- Twin Kamewa FF3755 Waterjets
- Vector Propulsion Control System
- Twin Disc MG5114SC Reduction Gears
- Twin Detroit Diesel Series 60 engines with DDEC IV
- Twin Kamewa FF3755 Waterjets
- Vector Propulsion Control System
- Twin Disc MG5114SC Reduction Gears

Each system is described in this section.

Draft
Further dissemination only as directed by Commandant (CG-937) or higher Coast Guard authority.

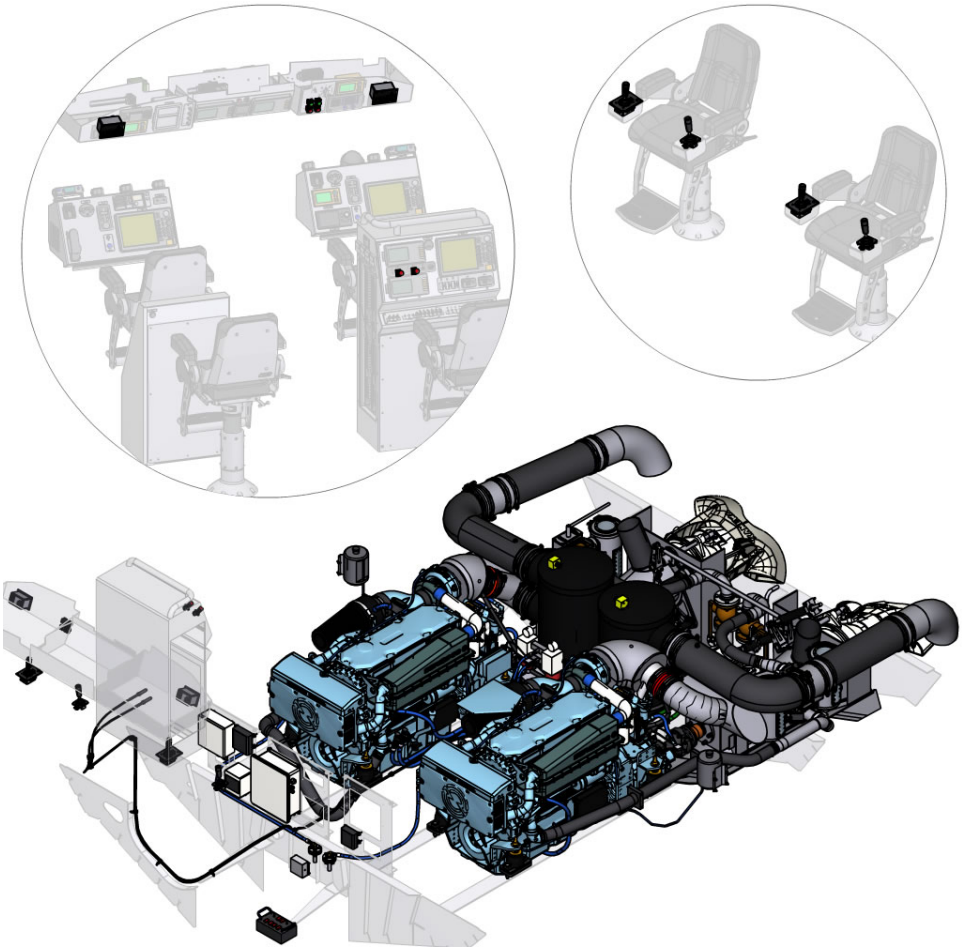

PROPULSION SYSTEM

Figure 1

Draft
Further dissemination only as directed by Commandant (CG-937) or higher Coast Guard authority.

A.1. Engine

General Description

The RB-M is powered by twin Detroit Diesel Series 60 engines. The Series 60 engines are six cylinder, four stroke, high speed diesels with integral Detroit Diesel Electronic Control (DDEC). The DDEC monitors the engine systems and regulates fuel injection.

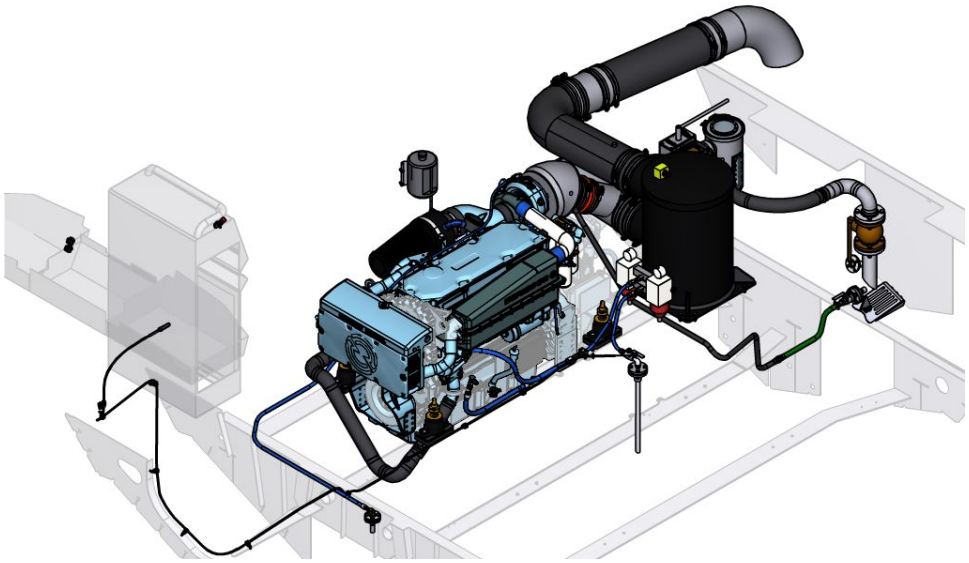

DIESEL ENGINE

Figure 1

The diesel engine has an inline cast iron block and a cast iron cylinder head that contains a single overhead camshaft. The camshaft actuates all the valves (two intake, two exhaust per cylinder), and operates the fuel injectors. The vertically

Draft
Further dissemination only as directed by Commandant (CG-937) or higher Coast Guard authority.

aligned gear train, located at the front end of the engine in a gear case, contains drive gears for the lubricating oil pump, crankshaft, camshaft, fuel pump drive, water pump and generator accessory drives.

Each engine is equipped with a full-flow oil filter, an oil cooler, one fuel oil filter, a turbocharger and an electronic engine control system.

Full pressure lubrication is supplied to all main, connecting, camshaft and rocker assembly bearings and to other moving parts. A gear-type pump draws oil from the oil pan through a screen and delivers it to the oil filter. From the filter, a small portion of the oil is delivered directly to the turbocharger by an external oil line. The remainder of the oil flows to the oil cooler, or bypasses the cooler, and then enters a longitudinal oil gallery in the cylinder block where the supply divides. Part of the oil goes to the cylinder head where it feeds the camshaft bearings and rocker assemblies. The remainder of the oil goes to the main bearings and connecting rod bearings via the drilled oil passages in the crankshaft. Drilled passages in the connecting rod feed oil to the piston pin and the inner surface of the piston crown.

Coolant is circulated through the engine by a centrifugal-type water pump. The jacket water cooling system, including the heat exchanger, is a closed system. Heat is removed from the coolant by the heat exchanger. Control of the engine temperature is accomplished by thermostats that regulate the flow of the coolant within the cooling system.

Fuel is drawn from the supply system through the fuel filter by a gear-type fuel pump. From there, the fuel is forced into the fuel inlet in the cylinder head and to the injectors. Excess fuel is returned, through a restricted fitting, to the supply tank through the outlet connecting line. Since the fuel is constantly circulating through the injectors, it serves to cool the injectors and to carry off any air in the fuel system.

Air is supplied by the turbocharger to the intake manifold and into the engine cylinders after passing through an air-to-air charge air cooler mounted ahead of the cooling system heat exchanger. The charge air cooler cools the pressurized intake air charge coming from the turbocharger before it enters the intake manifold.

Engine starting is provided by an electric starting motor energized by storage batteries. A charging generator (AURAGEN) serves to keep the batteries charged.

Draft
Further dissemination only as directed by Commandant (CG-937) or higher Coast Guard authority.

A.2. Cooling System

Circulating and Cooling Systems

The RB-M propulsion engine cooling is provided by a sea water circuit, an engine mounted heat exchanger, engine driven pumps and a fresh water circuit.

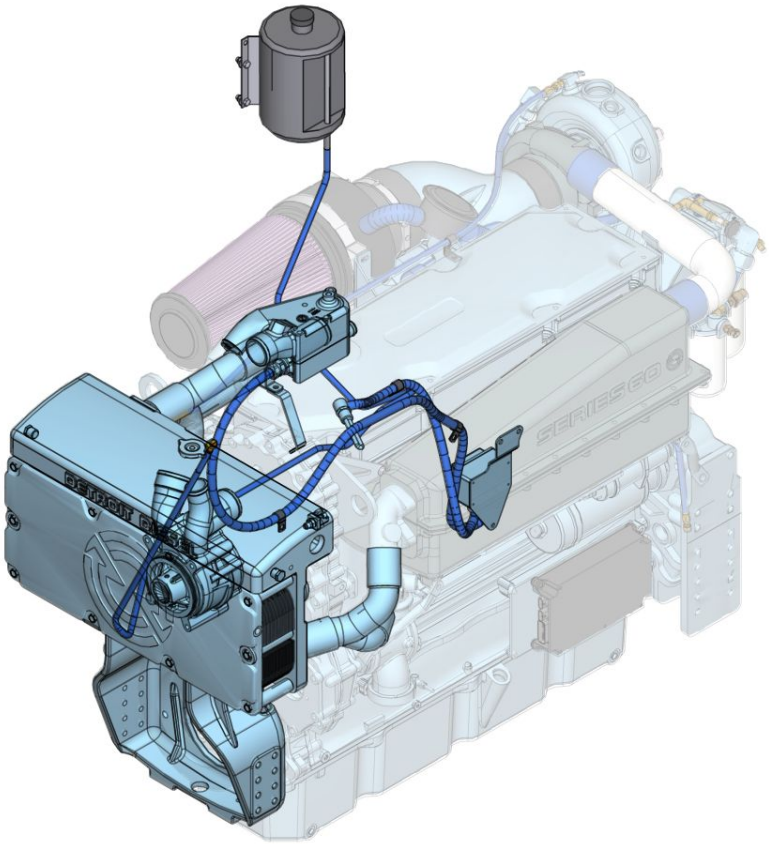

CIRCULATING AND COOLING SYSTEMS

Figure 1

Each main engine has an independent sea water suction line. Both seawater suctions are piped from the sea chest through a stainless steel ball-type shutoff valve. Seawater for each engine then passes through a duplex strainer. The strainers are valved to allow the complete shutoff and clean out of one strainer element without disruption of engine operation.

Draft
Further dissemination only as directed by Commandant (CG-937) or higher Coast Guard authority.

The seawater pumps and heat exchangers are mounted on the engines. The seawater picks up the engine heat from the fresh water circulation inside the heat exchangers. Heated seawater is discharged into the engine exhaust system, where it is used to cool the exhaust and then ejected overboard through the muffler and exhaust piping. A section of this piping is fitted with a control valve and return loop to divert some of the hot water back to the sea chest for operations in slush ice.

Jacket Water Heating

When connected to shore power, the engine jacket water is heated to provide for rapid starting and engine warm up. The Kim Hot Start 1500W jacket water heating system is powered by the 240/120VAC shore power panel only and is thermostatically controlled to provide a minimum of 120° F jacket water temperature at 0° F outside air temperature.

Draft
Further dissemination only as directed by Commandant (CG-937) or higher Coast Guard authority.

A.3. Fuel System

Fuel System

The fuel supply system provides fuel to the propulsion diesel engines. The system consists of the following:

- Fuel Tank
- Suction Valves with Remote Pull Cables
- Duplex Fuel Filter/Separator
- Secondary filter
- Fuel Return Line Check Valve

Fuel Oil Circulation

Fuel oil circulates through the system as follows:

1. Fuel is drawn through the suction lines through fuel system fuel shut off valves. These valves are operated locally or can be closed by a remote pull cable located in the pilothouse at the helm station.
2. Fuel flows into the fuel system separators. The fuel filter separators are duplex filters, allowing for maintenance of one filter while the other is in operation. The design of the duplex fuel filter/separator provides for removal of water and heavier particles, which fall to the bottom of the clear bowl. Fuel exits the duplex fuel filter/separator through a long life micron filter element.
3. Fuels travels to the engine fuel pump. The fuel pump is engine-driven with an internal relief vane that opens between 65–75 PSI to protect the pump from over pressurization.
4. Fuel flows to the secondary 8-micron fuel filter.
5. Fuel flows through the shut-off valve and then to the fuel injection system in each cylinder head.

Fuel Oil Return

Unused fuel oil returns to the fuel tank as follows:

Draft
Further dissemination only as directed by Commandant (CG-937) or higher Coast Guard authority.

1. As fuel travels through the cylinder heads, it is used for injection. Fuel not used for combustion cools the cylinder heads and cleans and lubricates the fuel injectors.
2. Fuel flows out the cylinder head through a restrictor fitting. The restrictor fitting provides a small back pressure to maintain system pressure.
3. Fuel flows through a fuel oil cooler to prevent a loss of power due to the heat build up in the fuel.
4. Fuel returns to the tank through a check valve.

Fuel Tank

The fuel tank is located between Frames 3.5 and 10, along the centerline of the boat. The tank sides are approximately 17 inches off centerline at the inboard engine girders. The fuel tank is an integral component of the hull and the top forms the platform between the engines.

The fuel tank holds 520 gallons at 100% full, with 468 gallons of usable fuel with a 10% reserve. The fuel tank is arranged with a sending unit for displaying the fuel level in the pilothouse.

The two suction pipes terminate one half inch from the bottom of the tank. Baffles mitigate the free surface movement of fuel. The tank has a siphon tube and valve located in the Engine Room just aft of bulkhead 7 at the forward end of the tank for stripping the fuel. Two fuel lines return unused fuel to the tank from each engine. The fuel fill and vent lines enter the tank top in the Auxiliary Machinery Space.

Fuel Sounding Rod

The level of the fuel tank can be sounded with a fuel sounding rod. The sound rod is calibrated and marked in increments of 25 gallons up to the maximum level of the tank. Numeric markings indicate the fuel level for every 100 gallons. The sounding rod is made of aluminum and has a satin finish to clearly indicate the fuel level. The sounding rod is located within the sounding tube.

Fuel Tank Vent

The Fuel Tank Vent is located in the fuel locker on the starboard side of the boat between Frames 7 and 8. The vent line enters the top of the tank next to the forward Tiona hatch. The vent is an inverted ball check valve that allows air to escape during fueling operations and temperature changes that cause expansion and contraction of

Draft
Further dissemination only as directed by Commandant (CG-937) or higher Coast Guard authority.

fuel. The check valve also prevents entry of water into the fuel tank in the event the boat capsizes.

Fuel Tank Fill

The fuel locker is located on the starboard side of the Pilothouse, between Frames 7 and 8. The fuel tank fill line has a camlock fitting with a lanyard to prevent water intrusion into the fuel tank. The fuel locker is designed to limit water intrusion during fueling and has a two inch lip to contain small fuel spills.

NOTE

Emergency fuel shut-off valves activation handles are located in the Pilothouse behind the Helm Position Stidd seat and in front of the Primary Crew Position.

Draft
Further dissemination only as directed by Commandant (CG-937) or higher Coast Guard authority.

Draft
Further dissemination only as directed by Commandant (CG-937) or higher Coast Guard authority.

A.4. Combustion Air System

The diesel engine requires an adequate supply of clean air for combustion to develop full and rated power and burn fuel efficiently. The air system has a direct effect on the engine output, fuel consumption, exhaust emissions, and engine life.

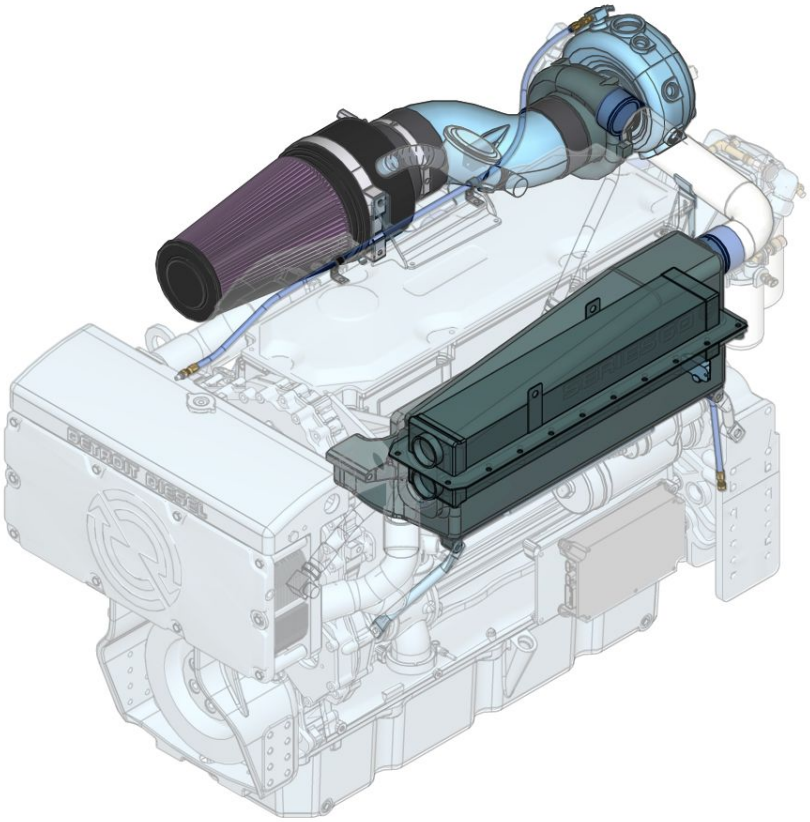

COMBUSTION AIR SYSTEM

Figure 1

Engine room air enters the turbocharger after passing through the air cleaner. The cleaner uses a unique 2-stage oil mist filtration system that capture the finest oil particles in blow-by to keep the engine intakes clean. The oil mist filter pack is disposable and the air filter is washable.

Draft
Further dissemination only as directed by Commandant (CG-937) or higher Coast Guard authority.

Power to drive the turbo charger is extracted from energy in the exhaust gas. The expanding exhaust gasses turn a single stage turbocharger wheel, which drives an impeller, thus pressurizing intake air.

This charge air is then cooled by an air-to-water charge air cooler (CAC). The CAC produces some condensate, depending on the ambient air temperature. This condensate drains to the bilge. The cooled, pressurized air is routed to the intake manifold then into the cylinder head ports through two intake valves, and into the cylinder.

Near the turbocharger compressor inlet is an air inlet restriction indicator. This device indicates the level of air resistance and is monitored by the DDEC.

Draft
Further dissemination only as directed by Commandant (CG-937) or higher Coast Guard authority.

A.5. Exhaust System

The RB-M exhaust is seawater cooled, and hot sections are covered with removable insulation blankets. Each engine exhaust uses a 10-inch Centek wet lift muffler made of fiberglass reinforced plastic. The mufflers each have drains leading to the bilge for draining the mufflers prior to trailer transport and to prevent trapping water that could freeze during storage. The valve for these drains should remain closed at all times.

Seawater flows from the seawater cooling circuit into the engine exhaust system, where it is used to cool the exhaust, then discharged overboard with the exhaust gases. A stainless steel exhaust cooling water spray ring injects the cooling water and provides an exhaust hose connection point.

The exhaust system is designed to continue functioning in the event the RB-M is in a self-righting situation.

The exhaust system also features a high temperature alarm and a DEMPs (Diesel Engine Maintenance Program) fitting located on the outlet side of the turbocharger prior to the seawater injection head. They are used for back pressure measurements during engineering trials.

Draft
Further dissemination only as directed by Commandant (CG-937) or higher Coast Guard authority.

Draft
Further dissemination only as directed by Commandant (CG-937) or higher Coast Guard authority.

A.6. Engine Controls (DDEC)

Electronic Engine Control

The Detroit Diesel Electronic Control System (DDEC) controls fuel injection timing and output by the EUIs on the Diesel engine. The system also monitors several engine functions using electrical sensors which send electrical signals to the Electronic Control Module (ECM). The ECM then computes the incoming data and determines the correct fuel output and timing for optimum power, fuel economy and emissions. The ECM also has the ability to display warnings or shut down the engine completely (depending on option selection) in the case of damaging engine conditions, such as low oil pressure, low coolant, or high oil temperature.

The replacement of DDEC components is based on indicated diagnostic codes leading to faulty components.

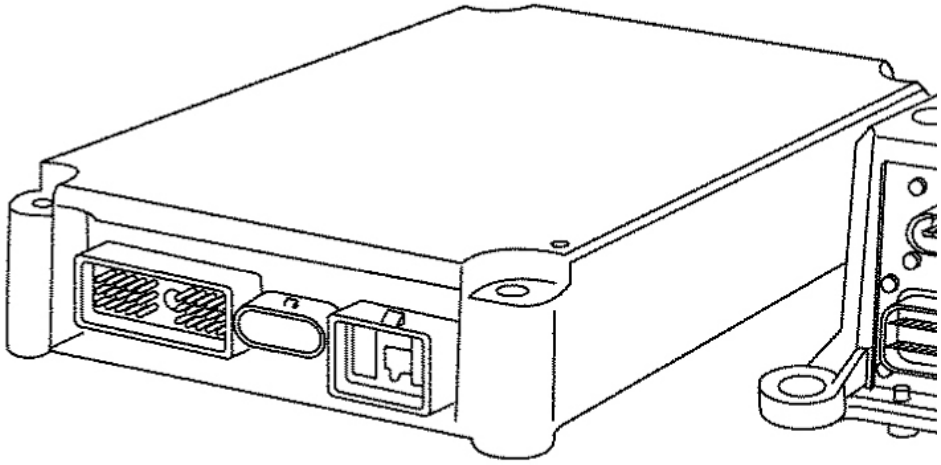

DDEC IV

ELECTRONIC CONTROL MODULE

Figure 1

DDEC Electronic Control Module

Draft
Further dissemination only as directed by Commandant (CG-937) or higher Coast Guard authority.

DDEC provides an indication of engine and vehicle functions. The ECM continually monitors the DDEC system. See **(Refer to Figure 2)** .

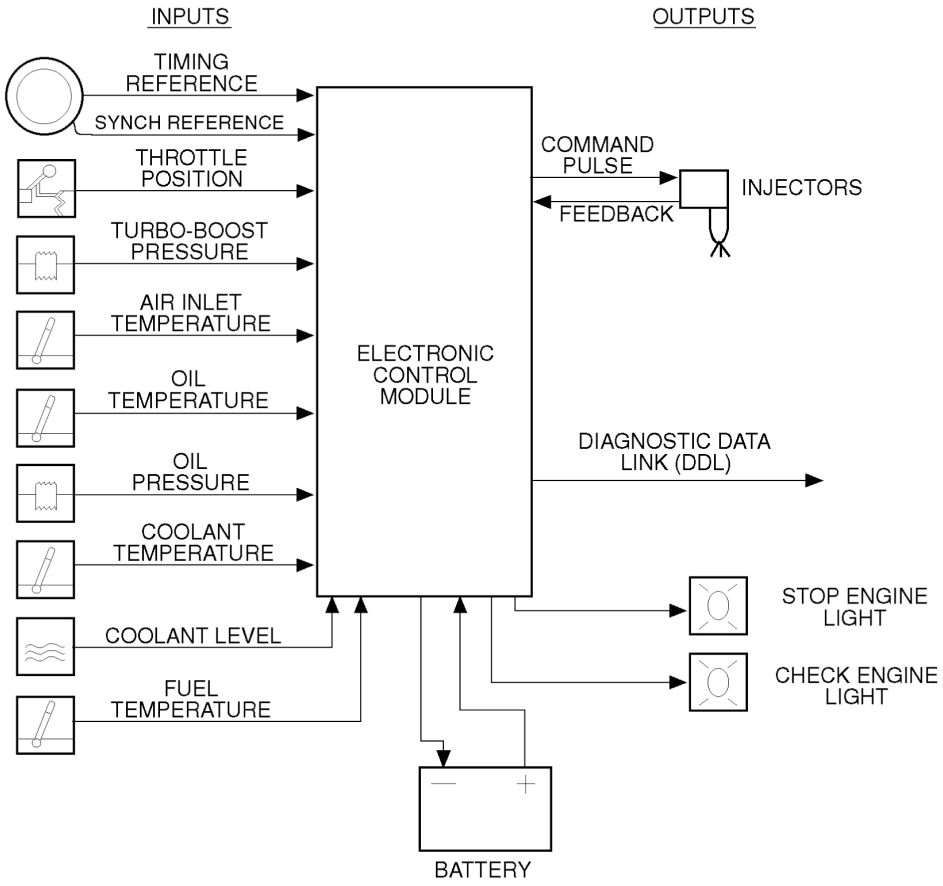

DDEC SYSTEM DIESEL ENGINE

Figure 2

Any faults that occur are stored as codes in the ECM's memory. The ECM sends an alarm signal through the DDEC to the Engine Display Module in the Pilothouse.

- The Check Engine Light (CEC) indicates an engine condition that requires action as soon as it is convenient.
- The Stop Engine Light (SEC) indicates a major fault has occurred and immediate action is required to avoid engine damage.

Draft
Further dissemination only as directed by Commandant (CG-937) or higher Coast Guard authority.

Draft
Further dissemination only as directed by Commandant (CG-937) or higher Coast Guard authority.

Draft
Further dissemination only as directed by Commandant (CG-937) or higher Coast Guard authority.

A.7. Reduction Gear

The RB-M reduction gears are Twin Disc MG5114SC with a 1.02:1 reduction ratio. The reduction gears may be placed in engaged (ENGAGE), disengaged (DISENG) or backflush (BACKFL) modes. The engaged position is the normal operating position and water will discharge from the water jet steering nozzle. The disengaged position disengages the water jet and there is no discharge. The backflush position reverses the rotation of the pump impeller and water will discharge from the water jet intake. The backflush mode is only used when back-flushing the water jet propulsion unit. A Cardan shaft is used to connect the reduction gears to the water jets. The gear oil pressure and temperature is monitored by the DDEC system. The gears are equipped with a FLOCS oil change system.

The Twin Disc MG5114SC features “come home” screws that permit mechanical lock-up of the clutch in the event hydraulic pressure is lost. If one transmission fails, the RB-M should be propelled with the remaining good transmission. Situations that may require use of come-home are:

1. Loss of hydraulic pump drive or failure of hydraulic pump.
2. Loss of oil.
3. Cracked clutch-apply piston.
4. Broken, worn or blown seal rings or clutch shafts or clutch-apply piston.

1. Loss of hydraulic pump drive or failure of hydraulic pump.
2. Loss of oil.
3. Cracked clutch-apply piston.
4. Broken, worn or blown seal rings or clutch shafts or clutch-apply piston.

Draft
Further dissemination only as directed by Commandant (CG-937) or higher Coast Guard authority.

Draft
Further dissemination only as directed by Commandant (CG-937) or higher Coast Guard authority.

A.8. Control System

Control System

Vector Stick is a joystick controlled thrust vectoring system for maneuvering the RB-M. The Vector Stick system integrates control of water jet steering and reversing functions and engine speed in such a way that translation and rotation commands are as simple as moving the joystick in the direction you want the vessel to move and moving the tiller in the direction you want the vessel to rotate.

The automatic control system is used to control the steering nozzle angle and the reversing bucket position of the water jet, along with RPM of the engines. The steering nozzle angle determines the port/starboard direction of flow from the water jet, which in turn, induces a turning moment to the vessel in the direction that the nozzle is pointing. The reversing bucket position determines the amount of the total water jet flow that is deflected ahead, which in turn, induces a proportional reversing force. The engine RPM relates to the power output of the water jet.

Control System Components

(**(Refer to Figure 1)**)

The Control System consists of the following components:

- Control Unit
- Joystick (2)
- Tiller (2)
- Trim/Roll Joystick (2)
- Transducers (5)
- Portable Backup Console

The Vector Control System receives 24-VDC from the 24B2 Engine Bus 24P2 Panel.

Control Unit

The Control Unit is a sealed enclosure that contains the electronics and software required for positioning the steering nozzles and reversing buckets and interceptors as well as engine RPM. The Control Unit is located in the Auxiliary Machinery Compartment.

Draft
Further dissemination only as directed by Commandant (CG-937) or higher Coast Guard authority.

Joysticks, Tillers, and Trim/Roll Joysticks

The Joystick, Tiller, and Trim/Roll Joystick controls are located on the hand rests of the helm and navigator seats in the Pilothouse.

- The Joysticks are located on the right hand rest of the seats and controls the water jet reversing buckets and engine speed for ahead and astern thrust.
- The Tillers are located on the left hand rest of the seats and controls the water jet steering nozzles.
- The Trim/Roll Joysticks are located on the right hand rest of the seats and controls the interceptor trim tabs to maintain boat performance in turns.

Transducers

The Control System receives feedback on the position of water jet components from five (5) transducers. The transducers are located on the following water jet components:

- Port Reversing Bucket
- Port Interceptor
- Starboard Reversing Bucket
- Starboard Interceptor
- Steering Cylinder

The transducers the position feedback of the listed components for display on the LCD Alarm and Display Panel on the Upper Center Console.

Portable Backup Console

(**(Refer to Figure 2)**)

In the event of a partial or total failure in the automatic control system, a Portable Backup Console can be connected to control the steering nozzles, reversing buckets, interceptor trim tabs, and engine RPM. The Portable Backup Console is electrically isolated from the automatic control system and has the following controls:

- Auto/Backup Rocker Switches (4)
- Port Waterjet/Port Interceptor Jog Lever
- Starboard Waterjet/Starboard Interceptor Jog Lever

Draft
Further dissemination only as directed by Commandant (CG-937) or higher Coast Guard authority.

- Port Engine RPM Rotary Knob
- Starboard Engine RPM Rotary Knob

The console has four (4) Auto/Backup Rocker Switches, one for each water jet and engine. The switches allow for selection of the automatic control system or use of the controls on the Portable Backup Console. Each switch individually switches its equipment between the automatic and backup controls. When “BACKUP” is selected, the joysticks and tillers of the automatic control system have no influence on the operation of the affected water jet/interceptor/engine.

The jog levers are two-axis levers that are rotated left and right to select control of the water jet or interceptor.

When the water jet function is selected:

- Left/Right movements with the lever correspond to Port/Starboard movement of the steering nozzle.
- Up/Down movements with the lever correspond to Up/Down movement of the reversing bucket.

When the interceptor function is selected:

- Up/Down movements with the lever correspond to Up/Down movement of the interceptor trim tab.
- Left/Right movements have no affect on any waterjet component.

The Engine RPM Rotary Knobs control the speed of the engines through the secondary engine RPM input circuit of the engine control system. Rotation of the knob clockwise will increase engine RPM and rotation of the knob counter-clockwise will decrease engine RPM.

The Portable Backup Console is stored in the Auxiliary Machinery Compartment and connects on the forward inboard part the Lower Helm Console.

Control System External Inputs

The control system has two (2) external inputs that directly affect boat operations:

- Autopilot
- Roll-Over Switch

The Autopilot signal comes from the Furuno NAVPILOT 500 Autopilot System. This input signal goes to the Control Unit to make changes to the water jet and

Draft
Further dissemination only as directed by Commandant (CG-937) or higher Coast Guard authority.

engines as required to match desired course and speed. More information on the Autopilot System can be found in Chapter 3, Section F.7 of the RB-M Operator's Handbook.

The Roll-Over Switch signal brings the engines to idle when the switch is activated. When a 100o or greater roll over occurs, the switch automatically reduces engine speed to idle to minimize the amount of water that enters the Engine Room. Once the roll-over event is completed, the joystick and tiller must be returned to the "neutral thrust" position in order to reset the control system and increase engine speed.

The Roll-Over Switch is located in the Auxiliary Machinery Compartment at the Frame 7 bulkhead, centerline, above the fuel tank.

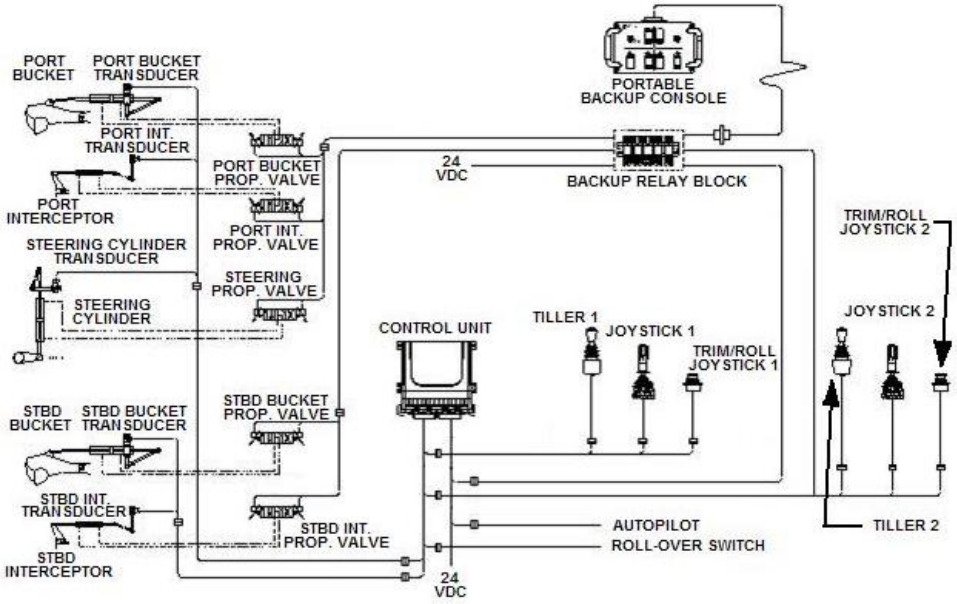

VECTOR CONTROL SYSTEM ARCHITECTURE

Figure 1

Draft
Further dissemination only as directed by Commandant (CG-937) or higher Coast Guard authority.

PORTABLE BACKUP CONSOLE

Figure 2

Draft
Further dissemination only as directed by Commandant (CG-937) or higher Coast Guard authority.

Draft
Further dissemination only as directed by Commandant (CG-937) or higher Coast Guard authority.

A.8.1. PCS Vector Control Clutch Panel

Clutch Panel

The clutch panels are flush-mounted in the Upper Helm and Upper Navigator Consoles.

NOTE

Within the clutch panel the outer push buttons (DISENG) is the neutral position for the main gears and vector joysticks shall be in the zero thrust position (centered).

The clutch panel handles the ENGAGE, DISENGAGE, and BACKFLUSH (reverse) functions of the clutch. All three states are mutually exclusive and are controlled with two three-position momentary rocker switches per engine. When the ENGAGE button is pressed, it energizes a latching circuit which keeps the clutch engaged until the DISENGAGE button is pressed. The following safety interlocks are integrated into the clutch panel circuit:

1. Neutral start interlock – If the respective gear is engaged, the clutch panel provides an interlock to inhibit the engine from starting.
2. Engine at idle interlock – If the respective engine is not at idle speed, the clutch panel provides an interlock to inhibit the engagement of the clutch.

The clutch panel also houses the Backflush function for the waterjets. When it is suspected the boat has sucked material into the nozzle, the Backflush forces water back through the nozzle attempting to clear the nozzle port.

NOTE

RPMs for Backflushing are not to exceed 1200 RPM.

The Backflush circuit is not provided with latching logic, thus the Backflush (reverse) gear remains engaged only while the button remains depressed. The Backflush gear is not provided with a neutral thrust permissive, however, it will not engage while the forward gear is engaged for safety reasons.

Draft
Further dissemination only as directed by Commandant (CG-937) or higher Coast Guard authority.

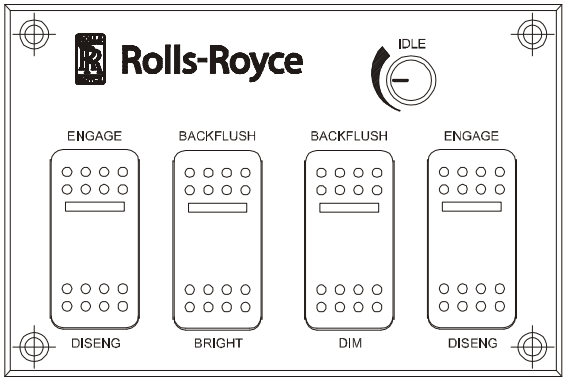

CLUTCH PANEL

Figure 1

The clutch panel is equipped with an idle knob to control RPM independent of the joystick. Rotation of the idle knob clockwise increases RPM, while rotation counterclockwise decreases RPM. The RPM range of the idle knob is limited to 40% of full RPM.

LEDs are provided on the switches to indicate the status of each clutch (). To decrease the brightness of the LEDs, press down the lower portion of the rocker switch labeled DIM. To increase the brightness of the LEDs, press down the lower portion of the rocker switch labeled BRIGHT. Press the applicable button repeatedly until desired LED intensity is achieved. This dimming circuit is common for the panel, so increasing or decreasing the LED brightness with these switches affects all four LEDs.

Clutch LED Status

LED Status	Indication
Not illuminated	Clutch not engaged AND reversing bucket not at neutral thrust position
Illuminated steady	Clutch engaged

Draft
Further dissemination only as directed by Commandant (CG-937) or higher Coast Guard authority.

Draft
Further dissemination only as directed by Commandant (CG-937) or higher Coast Guard authority.

Draft
Further dissemination only as directed by Commandant (CG-937) or higher Coast Guard authority.

A.8.2. PCS Vector Control LCD Alarm Panel

LCD display and alarm panel

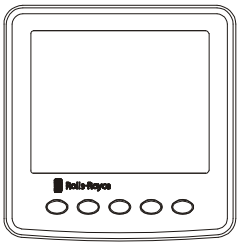

LCD DISPLAY AND ALARM PANEL

Figure 1

Panel operation

The Vector Control LCD Alarm Panel is located in the Pilothouse in the Upper Center Console between the MDE Electronic Display Modules (EDM). The position allows the entire crew visibility of the alarm display.

NOTE

> The Vector Control System has an audible buzzer and visual alarm flush-mounted into the Upper Center Console above the LCD Alarm Panel.

The LCD display serves two primary functions; to display the position of the reversing buckets, steering nozzles, and interceptors/trim tabs and also to provide a means for the operator to view control system alarms.

To change the screen display at any time, press any one of the first four buttons (beginning on the left) on the display. This action displays the button function menus

Draft
Further dissemination only as directed by Commandant (CG-937) or higher Coast Guard authority.

on the bottom of the LCD display. Once the desired menu button is pressed, the screen changes accordingly.

To change the LCD backlight and/or contrast at any time, press the fifth (5th) button (furthest to the right). This displays the function menus for increasing/decreasing the screen contrast and the backlight intensity. Once this submenu opens, pressing the buttons under the respective “+/-“ icons causes the screen display to change accordingly.

Steering nozzle, reversing bucket, and interceptor display

The LCD display panel continuously indicates the actual position of the steering nozzles, reversing buckets and interceptors (or trim tabs) positions as applicable. The positions are shown via bar graph displays.

- When the reversing buckets are in the neutral thrust position, only the center bar is darkened on the respective graph. When the reversing buckets are moved in either the up or down direction, the display incrementally darkens additional bars to reflect the actual position of the bucket.
- When the steering nozzles are in the center position, only the center bar is darkened on the respective graph. When the steering nozzles are moved in either the port or stbd direction, the display incrementally darkens additional bars to reflect the actual position of the nozzles.
- When the interceptors are in the fully raised position, only the top bar is darkened on the respective graph. When the interceptors are lowered, the display incrementally darkens additional bars to reflect the actual position of the unit. When the interceptors are fully lowered, the bar graph display is fully darkened.

LCD display menu buttons

As mentioned above, pressing any one of the first four buttons displays the button function menus on the bottom of the LCD. Once a menu button is pressed, the LCD screen changes accordingly. Pressing the fifth (5th) button displays the function menus for increasing/decreasing the screen contrast and the backlight intensity. Once this submenu opens, pressing the buttons under the respective “+/-“ icons causes the screen display to change accordingly.

LCD display menu buttons

Draft
Further dissemination only as directed by Commandant (CG-937) or higher Coast Guard authority.

Screen display	Button	Function
Main screen	1, 2, 3 and 4	Displays the button function menus on the bottom of the LCD.
Main screen	5	Backlight/contrast adjustment - Pressing the buttons under the respective “+/-“ icons causes the screen display to change accordingly.
Main screen	1	Alarm acknowledge: Pressing button minimizes the size of the “FAULT” icon on the main display screen.
Main screen	2	Fault screen – Display text readout of active control system faults.
Main screen	3	Calib (calibration) screen – Enters the calibration submenu screen.
Main screen	4	Not used.
Main screen	5	Exit/hide submenu
Fault screen	1	View meters – Returns to the main display screen.
Fault screen	5	Exit/hide submenu.
Calib screen	1	View Meters – Returns to the main display screen.
Calib screen	2	Init cal – Initializes calibration mode for the LCD display

Draft
Further dissemination only as directed by Commandant (CG-937) or higher Coast Guard authority.

Screen display	Button	Function
Calib screen	3	Toggle D Mode – Changes the “DatMode” setting between “232” and “CAN”. In “232” mode, the LCD displays the position of the nozzles/ buckets/interceptors based on data received from the control box. In “CAN” mode, the LCD displays the position of the nozzles/buckets/ interceptors based on data received from separate potentiometers dedicated for the indication circuit (note: not supplied with most applications).

Draft
Further dissemination only as directed by Commandant (CG-937) or higher Coast Guard authority.

Screen display	Button	Function
Calib screen	4	Toggle Noz Map – Setting that enables the direction of the nozzle display to be changed to properly correlate to the direction of the steering nozzle movement. This value should not be changed once it has been set by an authorized Rolls-Royce service representative.
Calib screen	5	Exit/hide submenu.
Init cal	1	Finish cal – Once the calibration procedure has been completed, pressing this button stores the values in a non-volatile memory.
Init cal	2	Set Z Thr – Records the zero (neutral) thrust position of the reversing buckets to properly scale the display.

Draft
Further dissemination only as directed by Commandant (CG-937) or higher Coast Guard authority.

Screen display	Button	Function
Init Cal	3	Toggle S Type – Changes the mode of the LCD display from “Main” to “Wing” when there is more than one LCD display included in the system. This value should not be changed once it has been set by an authorized Rolls-Royce service representative.
Init Cal	4	Abort cal – Exits out of the calibration mode without changing any of the calibrated values.
Init Cal	5	Exit/hide submenu.

Draft
Further dissemination only as directed by Commandant (CG-937) or higher Coast Guard authority.

Screen display	Button	Function
Boot Loader – To be accessed by authorized Rolls-Royce personnel only	1 and 2	A. Simultaneously holding down buttons 1 and 2 while the unit is being powered up calls up the loader screen. B. Simultaneously holding down buttons 1 and 2 for approx 2 seconds when the unit is running displays the message “hold to reboot”. If the buttons remain depressed for an additional 2-3 seconds after this message appears, the loader screen is called up.

LCD fault displays

When a control system fault occurs (feedback fault, non follow-up alarm, etc.), a warning icon displaying the word “FAULT” flashes on the main display screen to alert the operator that a fault condition exists. Pressing any one of the first four buttons on the display will display the button function menu on the bottom of the LCD display. The operator may choose one of the following options for alarm handling:

- Acknowledge (“Ack”) alarm – When this option is selected the fault icon stops flashing, diminishes in size, and remains in the center of the main display sceen.6
- View faults – When this option is selected, the display changes to the “FAULTS” screen. The faults screen provides a real time text display up to 20 active alarms.

A complete list of control system alarms is provided in the following table. Please note that not all alarms apply to every application; only alarms applicable to the control system configuration are active.

Draft
Further dissemination only as directed by Commandant (CG-937) or higher Coast Guard authority.

control system alarms

Alarm	Cause
CAL FAULT	Faulty control system calibration
Roll Cmd Pot	Roll command potentiometer signal failure
Trim Cmd Pot	Trim command potentiometer signal failure
ST1 Joy X	Station #1 Joystick X-axis (port/ stbd) command potentiometer signal failure
St1 Joy Y	Station #1 Joystick Y-axis (fore/ aft) command potentiometer signal failure
ST1 Port Lever	Station #1 Port control lever command potentiometer signal failure
ST1 Stbd Lever	Station #1 Stbd control lever command potentiometer signal failure
ST1 Helm/Till	Station #1 Helm/tiller command potentiometer signal failure
ST1 Idle Knb	Station #1 Idle knob command potentiometer signal failure
ST2 Joy X	Station #2 Joystick X-axis (port/ stbd) command potentiometer signal failure
ST2 Joy Y	Station #2 Joystick Y-axis (fore/ aft) command potentiometer signal failure
ST2 Port Lev	Station #2 Port control lever command potentiometer signal failure
ST2 Stbd Lev	Station #2 Stbd control lever command potentiometer signal failure
ST2 Helm/Till	Station #2 Helm/tiller command potentiometer signal failure

Draft
Further dissemination only as directed by Commandant (CG-937) or higher Coast Guard authority.

ST2 Idle Knb	Station #2 Idle knob command potentiometer signal failure
ST3 Joy X	Station #3 Joystick X-axis (port/ stbd) command potentiometer signal failure
ST3 Joy Y	Station #3 Joystick Y-axis (fore/ aft) command potentiometer signal failure
ST3 Port Lev	Station #3 Port control lever command potentiometer signal failure
ST3 Stbd Lev	Station #3 Stbd control lever command potentiometer signal failure
ST3 Helm/Till	Station #3 Helm/tiller command potentiometer signal failure
ST3 Idle Knob	Station #3 Idle knob command potentiometer signal failure
Port Bkt Sens.	Port bucket feedback potentiometer signal failure
Stbd Bkt Sens.	Stbd bucket feedback potentiometer signal failure
Port Noz Sens.	Port steering nozzle feedback potentiometer signal failure
Stbd Noz Sens.	Stbd steering nozzle feedback potentiometer signal failure
Port Tab Sens.	Port interceptor/trim tab feedback potentiometer signal failure
Stbd Tab Sens.	Stbd interceptor/trim tab feedback potentiometer signal failure
Port Bkt NFU	Port bucket non follow-up fault; hydraulic system not responding properly to control system commands
Stbd Bkt NFU	Stbd bucket non follow-up fault; hydraulic system not responding properly to control system commands

Draft
Further dissemination only as directed by Commandant (CG-937) or higher Coast Guard authority.

Port Noz NFU	Port nozzle non follow-up fault; hydraulic system not responding properly to control system commands
Stbd Noz NFU	Stbd nozzle non follow-up fault; hydraulic system not responding properly to control system commands
Port Tab NFU	Port interceptor/trim tab non follow-up fault; hydraulic system not responding properly to control system command Stbd interceptor/trim tab non follow-up fault; hydraulic system not responding properly to control system commands
Stbd Tab NFU	Stbd interceptor/trim tab non follow-up fault; hydraulic system not responding properly to control system commands
DOCKMODE FAULT – Inbd Cltch Eng.	Dock mode fault; one or both of the inboard clutches are engaged
DOCKMODE FAULT – Otbd Cltch Dis.	Dock mode fault; one or both of the outboard clutches are disengaged

Draft
Further dissemination only as directed by Commandant (CG-937) or higher Coast Guard authority.

A.9. Shafting

Shafting

A Cardan Shaft (drive shaft) couples each engine/reduction gear to its associated waterjet. The shaft has a spline joint that allows for expansion and contraction. U-Joints at the end of each shaft accept misalignment between the waterjet and engine/ reduction gear.

The Cardan Shafts are located in the Engine Room.

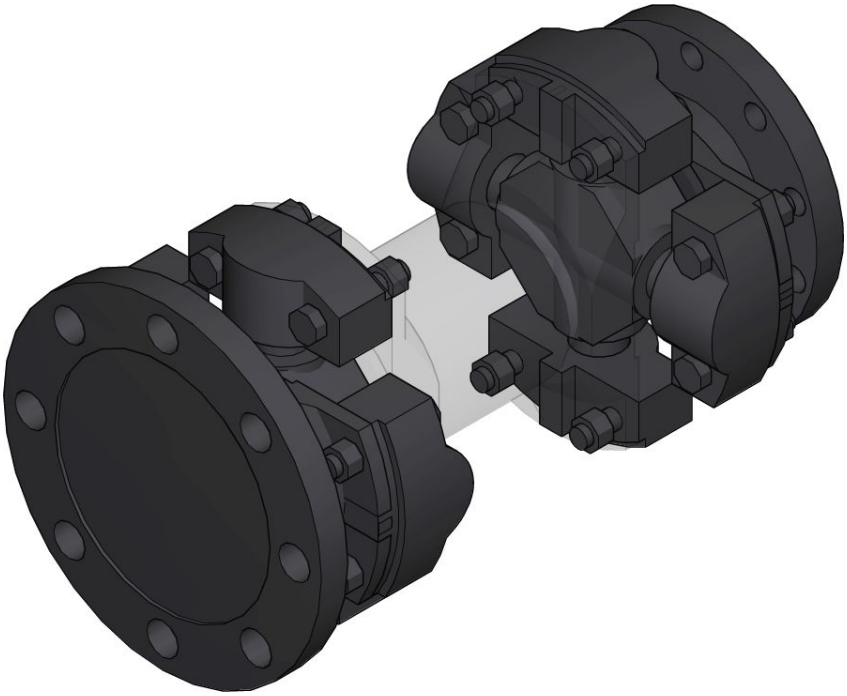

SHAFTING

Figure 1

Draft
Further dissemination only as directed by Commandant (CG-937) or higher Coast Guard authority.

Draft
Further dissemination only as directed by Commandant (CG-937) or higher Coast Guard authority.

A.10. Water Jets

Description of function

Water enters through the inlet duct. The base plate of the inlet duct is positioned flat against the hull of the boat. Water enters both as a result of the movement of the boat and due to the action of the impeller, which draws it in. At low speeds, most of the water is drawn in through the inlet, while at higher speeds, most of the water is pressed in through the inlet. Inside the inlet duct the speed of the water slows, causing the pressure to increase. There is a further increase in pressure above the impeller until the guide vanes in the guide vane chamber eliminate the rotation of the water flow. This maintains the energy generated by the rotation. The flow of water then accelerates via the guide vane chamber and the trim nozzle (which is located on the end of the guide vane chamber) and out in to the air. It is the difference between the ingoing and outgoing speeds which generates thrust.

General water jet unit advantages to a propeller installation:

- As a rule of thumb, the water jet unit gives higher overall efficiency, in comparison with a corresponding propeller installation, at speeds exceeding 25 knots.
- Superior maneuverability at all speeds.
- No underwater appendages which results in shallow draught and safe operation.
- No risk of overloading the engine, low noise and vibration levels. This means longer service life and low maintenance costs.
- High thrust at low speeds, giving fast acceleration.

Draft
Further dissemination only as directed by Commandant (CG-937) or higher Coast Guard authority.

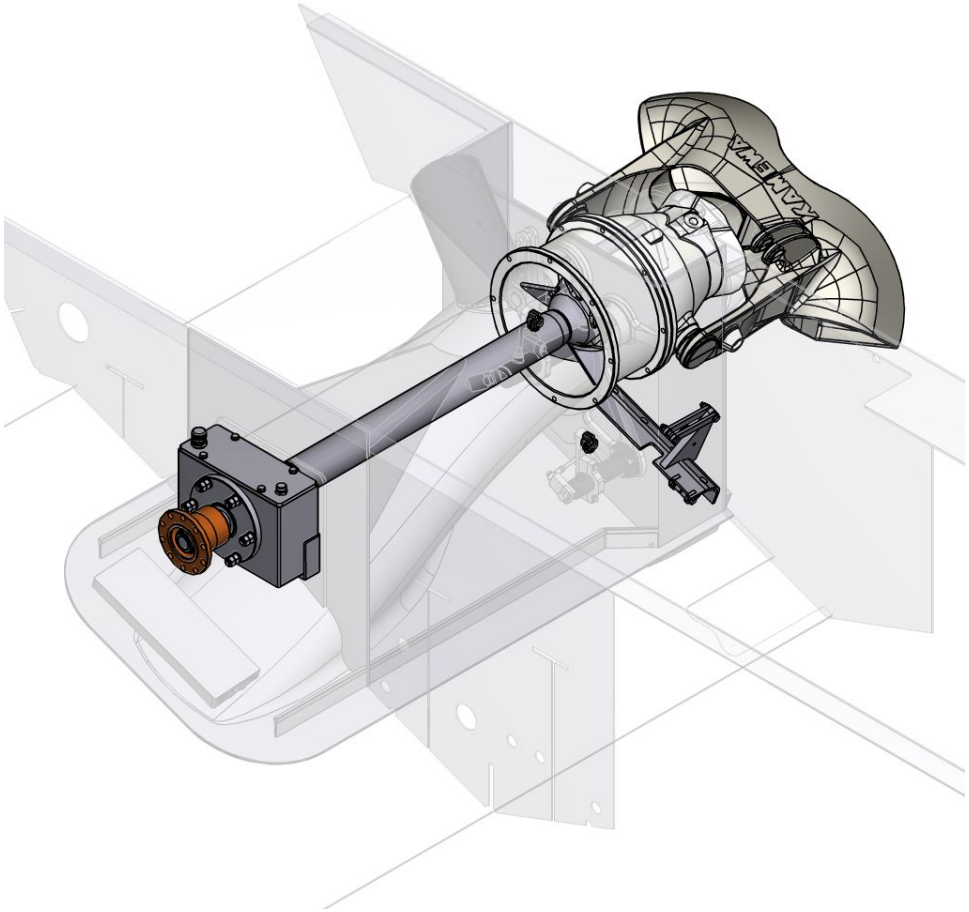

WATERJET

Figure 1

Refer to **(Refer to Figure 2)** for the main components of the waterjet.

Draft
Further dissemination only as directed by Commandant (CG-937) or higher Coast Guard authority.

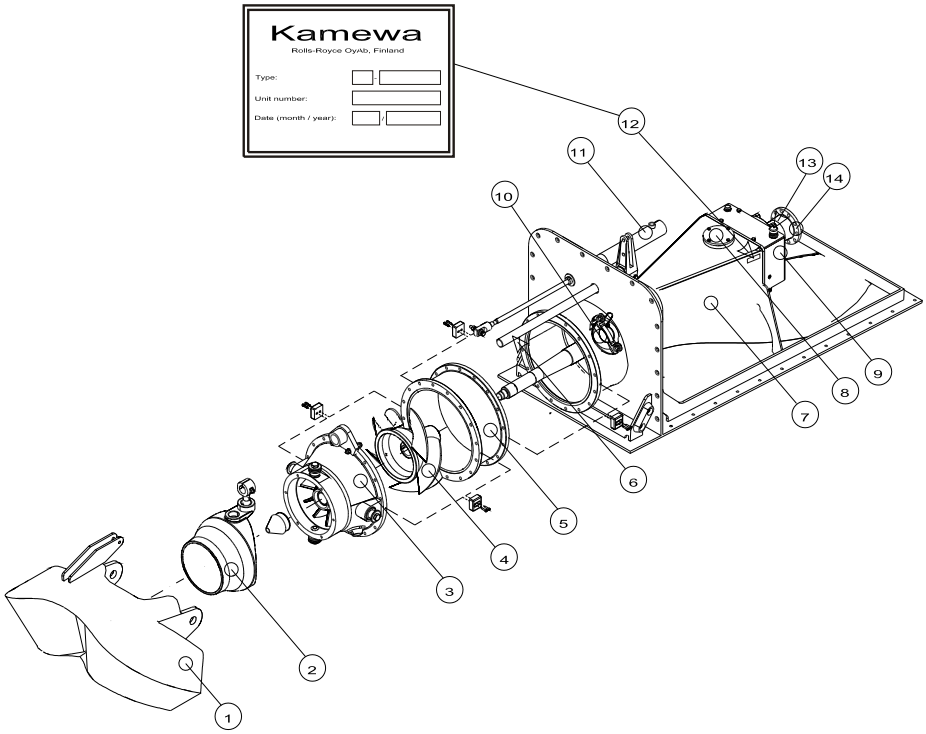

1. Reversing bucket
2. Steering nozzle
3. Guide vane chamber
4. Impeller
5. Impeller housing
6. Steering shaft
7. Inlet duct
8. Anode hatch
9. Bearing housing
10. Inspection hatch
11. Reversing cylinder
12. Serial number plate
13. Oil dip stick
14. Shaft flange

MAIN COMPONENTS OF THE WATERJET UNIT

Figure 2

Fouled Waterjet Procedures

Fouled Waterjet procedures are provided in Chapter 7, Section B.9. (Section B.9. Fouled Waterjet)

Draft
Further dissemination only as directed by Commandant (CG-937) or higher Coast Guard authority.

Draft
Further dissemination only as directed by Commandant (CG-937) or higher Coast Guard authority.

B. Hull System

Introduction

The RB-M incorporates a planing hull form, a double chine and a 20-degree transom dead rise. The propulsion system is matched with the hull form design to provide high speed and maneuverability.

Hull Construction

The boat's hull is made of aluminum alloy type 5083-H116 plating with 5086-H112 extrusions. A keel shoe runs the length of the hull for additional hull plating protection and improved maneuverability. Appendages extending below the hull include the keel shoe, and two strakes extending forward from the transom and out board of the water jets, port and starboard.

Hull Reference Points

Frames are numbered from transom to bow. Spacing from the transom to Frame 2 is at 24-inch intervals. Spacing from Frame 2 forward is at 28-inch intervals.

Item	Location
Boat's numbers and a Coast Guard identification stripe with emblem	On each side of the hull between Frames 14 and 17.
"U.S. COAST GUARD" in black letters	On each side of the hull between Frames 2 and 5.
Boat's number and station name in black letters (EC-002)	Displayed on the stern.
Fixed fenders or "rubrails" ("D" shaped ionomer foam attached to studs welded to the hull)	At the gunwale level from the bow to around the stern to the end of the swim platform.
Survivors' Compartment Sink Overboard Discharge	Port side between Frames 11 and 12.
HVAC Condensate Pump Overboard Discharge	Starboard side at Frame 13.

Draft
Further dissemination only as directed by Commandant (CG-937) or higher Coast Guard authority.

Item	Location
Bilge Pump Overboard Discharges	• Forepeak: Starboard side just forward of Frame 14. • Survivors' Compartment: Port side at Frame 11. • Port AMC: Port side at Frame 7. • Starboard AMC: Starboard side at Frame 7. • Engine Room: Starboard side between Frames 3 and 4. • Lazarette: Aft through the Transom on the starboard side.
Depth sounder transducer	Between Frames 1 and 2 to the port side of the keel.
Sea suction valves	Between the Transom and Frame 1 on both sides of the keel in the Lazarette.
The boat's deepest draft	Between the Transom and Frame 2.

Draft
Further dissemination only as directed by Commandant (CG-937) or higher Coast Guard authority.

C. Fendering System

The RB-M fendering consists of D-shaped ionomer foam that will protect the hull from damage during boarding and alongside towing missions. The fender sections have undergone a heating process that results in a toughened outer skin formed over a resilient core. The fender is secured to the hull by capture fasteners that bolt to channels welded to the hull. The fender is installed in six -foot sections. The fendering system extends around the perimeter of the boat except the transom.

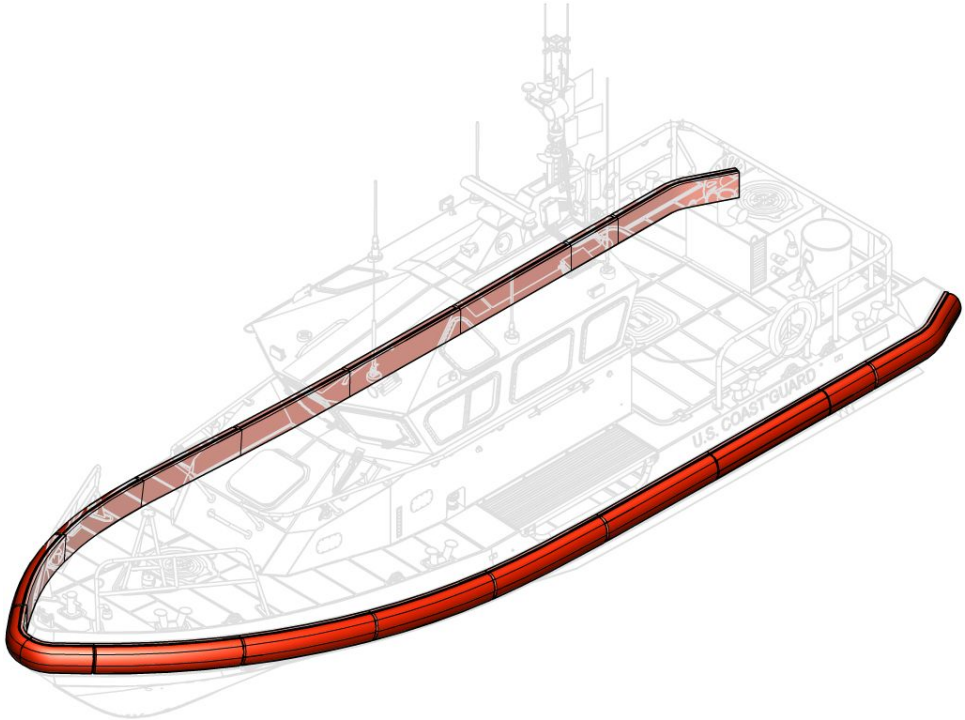

FENDERING SYSTEM

Figure 1

Draft
Further dissemination only as directed by Commandant (CG-937) or higher Coast Guard authority.

The system is modular to allow for ease of replacement and replacement of only those sections that are damaged. With the exception of the bow and transom corner sections, the fendering is interchangeable so that custom fitting of spare fendering is not required.
Fendering can be washed with general purpose water-based cleaners.

Draft
Further dissemination only as directed by Commandant (CG-937) or higher Coast Guard authority.

D. Vector Control Steering System

Introduction

The RB-M Steering System is an electro-hydraulic steering system controlled by the steering controls in the Pilothouse at the Helm and Navigator positions. The operator manipulates joystick, tiller and trim controls to maneuver the RB-M as required to meet mission requirements. The Steering System consists of the following:

- Reversing Bucket.
- Steering Nozzle.
- Trim Tab.
- Hydraulic System.
- Steering Controls.

Draft
Further dissemination only as directed by Commandant (CG-937) or higher Coast Guard authority.

Draft
Further dissemination only as directed by Commandant (CG-937) or higher Coast Guard authority.

D.1. Reversing Bucket

The ahead/astern movement of the boat is controlled with the reversing bucket. The reversing bucket is infinitely variable between three main positions to obtain the speed and control needed for different maneuvers.

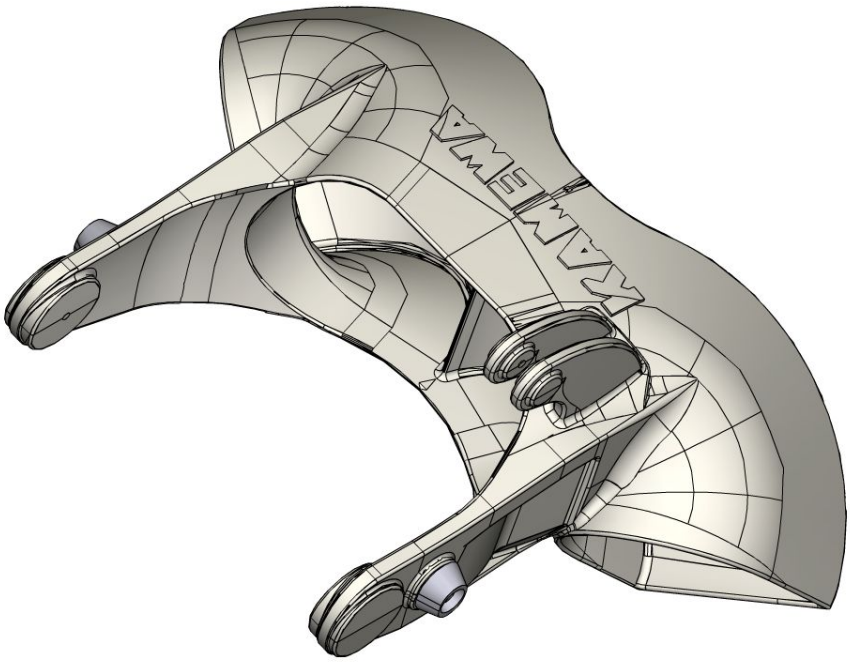

WATERJET REVERSING BUCKET

Figure 1

Draft
Further dissemination only as directed by Commandant (CG-937) or higher Coast Guard authority.

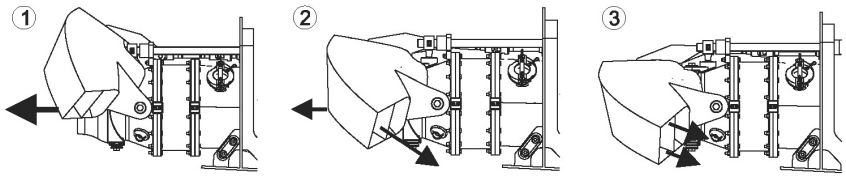

REVERSING BUCKET POSITIONS

Figure 2

1. Full ahead position. When driving full ahead the reversing bucket is in its upper position, i.e. completely raised. The jet of water is now unaffected by the reversing bucket and thereby the maximum ahead thrust is obtained.
2. Zero thrust position. At the zero thrust position the reversing bucket deflects the major part of the jet of water in a forward/downward direction, while the remaining part of the jet of water passes straight backwards. The forces are equal, and the boat is neither moving ahead nor astern. Zero thrust is obtained when the reversing bucket is lowered about 70%. Do not confuse Zero Thrust position with neutral position with the marine gear on the Clutch Panel. Neutral position is obtained using the Clutch Panel and pushing down on the DISENG push button for both marine gears.
3. Full astern position. At full astern position the reversing bucket fully deflects the jet of water in a forward/downward direction, i.e. the boat is reversing.
4. When the reverse bucket is in the down position the bucket has two water discharging ports per waterjet. Using the nozzle joy stick you can direct equal thrust force out both sides of the bucket or moving the nozzle joy stick to port or starboard direct the force of the thrust to one side of the bucket. This allows even force to be placed onto the hull allowing you to maneuver (WALK) the RB-M sideways.

1. Full ahead position. When driving full ahead the reversing bucket is in its upper position, i.e. completely raised. The jet of water is now unaffected by the reversing bucket and thereby the maximum ahead thrust is obtained.
2. Zero thrust position. At the zero thrust position the reversing bucket deflects the major part of the jet of water in a forward/downward direction, while the remaining part of the jet of water passes straight backwards. The forces are equal, and the boat is neither moving ahead nor astern. Zero thrust is obtained when the reversing bucket is lowered about 70%. Do not confuse Zero Thrust

Draft
Further dissemination only as directed by Commandant (CG-937) or higher Coast Guard authority.

position with neutral position with the marine gear on the Clutch Panel. Neutral position is obtained using the Clutch Panel and pushing down on the DISENG push button for both marine gears.

3. Full astern position. At full astern position the reversing bucket fully deflects the jet of water in a forward/downward direction, i.e. the boat is reversing.
4. When the reverse bucket is in the down position the bucket has two water discharging ports per waterjet. Using the nozzle joy stick you can direct equal thrust force out both sides of the bucket or moving the nozzle joy stick to port or starboard direct the force of the thrust to one side of the bucket. This allows even force to be placed onto the hull allowing you to maneuver (WALK) the RB-M sideways.

CAUTION !

If the reversing bucket becomes uncontrollable or when the bucket is stuck in the down position but the boat is still steerable, perform the following: (1) in the Lazarette compartment facing aft on the port side there will be three hydraulic activators, (2) pulling the closest activator to center line will allow the crew to pull up the bucket and secure the bucket in the open position for a transit back to the station. Steer with extreme caution and operate the boat with reduced speed. In this condition the RB-M will NOT have reverse capability. When returning to the dock, notify the station for pierside assistance and be prepared to use the anchor to control boat movement.

Draft
Further dissemination only as directed by Commandant (CG-937) or higher Coast Guard authority.

Draft
Further dissemination only as directed by Commandant (CG-937) or higher Coast Guard authority.

D.2. Steering Nozzle

Sideways movement of the boat is controlled by the steering nozzle. There are three main positions with infinite variables in-between:

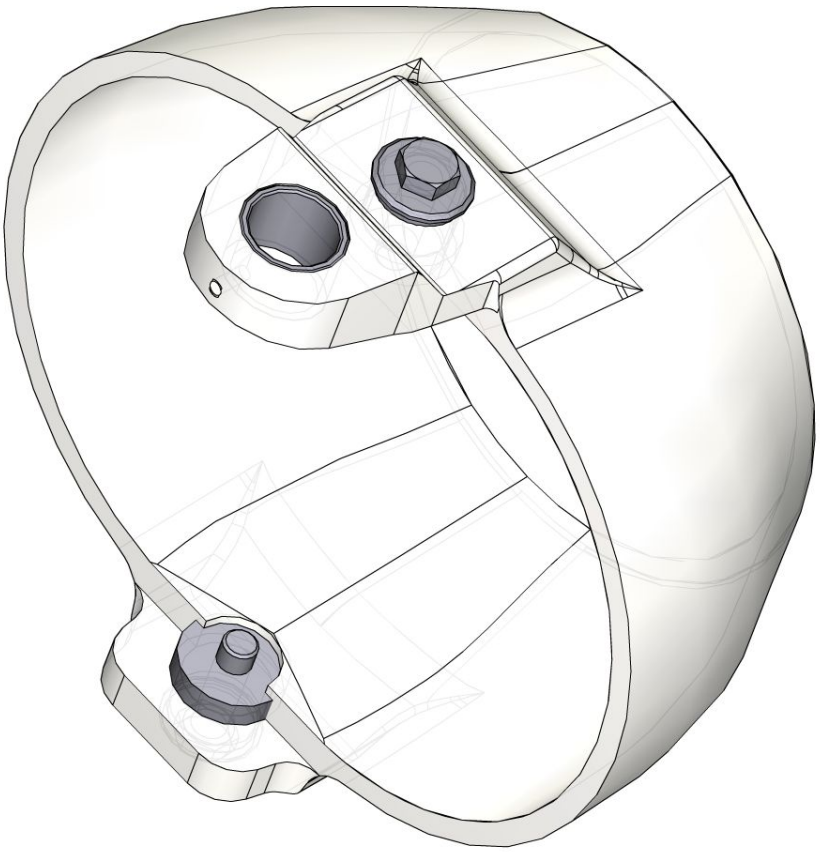

WATERJET STEERING NOZZLE (FWD LOOKING AFT

Figure 1

Draft
Further dissemination only as directed by Commandant (CG-937) or higher Coast Guard authority.

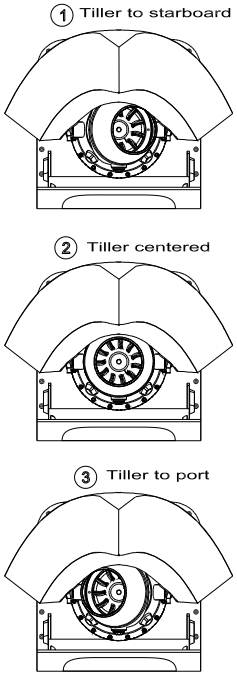

169701
2007-01-23 13 Rolls-RoyceOyAb

STEERING NOZZLE POSITIONS

Figure 2

Draft
Further dissemination only as directed by Commandant (CG-937) or higher Coast Guard authority.

1. Full steering lock starboard. Full steering lock starboard means that the steering nozzle is turned 30° to starboard side. Due to the de flection of the jet of water a side force is generated which turns the boat to starboard.
2. Steering nozzle straight. When the steering nozzle is straight the jet of water is unaffected, which means that the boat will move straight ahead, or astern, depending on the position of the reversing bucket.
3. Full steering lock port. Full steering lock to port side means that the jet of water is deflected to port and the generated side force turns the boat to port.

1. Full steering lock starboard. Full steering lock starboard means that the steering nozzle is turned 30° to starboard side. Due to the de flection of the jet of water a side force is generated which turns the boat to starboard.
2. Steering nozzle straight. When the steering nozzle is straight the jet of water is unaffected, which means that the boat will move straight ahead, or astern, depending on the position of the reversing bucket.
3. Full steering lock port. Full steering lock to port side means that the jet of water is deflected to port and the generated side force turns the boat to port.

Draft
Further dissemination only as directed by Commandant (CG-937) or higher Coast Guard authority.

Draft
Further dissemination only as directed by Commandant (CG-937) or higher Coast Guard authority.

D.3. Trim Tab

The interceptor trim tabs are integrated with the steering system to improve performance in turns. Interceptor trim tabs are located on the lower outboard section of the water jet. The interceptor trim tab is operated by a hydraulic cylinder and will control the attitude of the boat only when underway at speed. A trim tab in the lowered position creates lift on the stern of the boat. Lowering a trim tab on one side will create lift on the corresponding side and therefore correct a list. Lowering both trim tabs will create lift evenly on the stern and assist in reducing bow rise induced from wave action. The position of each trim tab is indicated by independent sending units.

The Interceptor Trim Tab Controls are located in the Pilothouse on the left armrest of the Helm and Navigator Stidd Seats, aft of the tiller.

A description of the indicators is in Chapter 3 Boat Systems, section A.9.2 PCS Vector Control System Alarm Panel (A.8.2. PCS Vector Control LCD Alarm Panel).A.8.2. PCS Vector Control LCD Alarm Panel

Draft
Further dissemination only as directed by Commandant (CG-937) or higher Coast Guard authority.

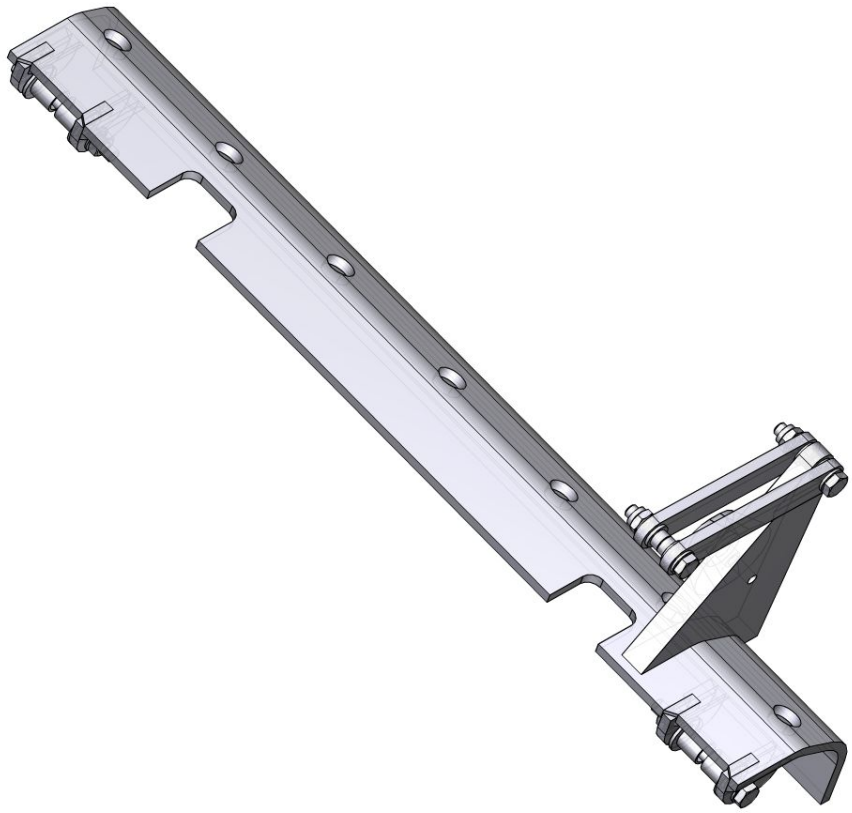

INTERCEPTOR TRIM TABS

Figure 1

Draft
Further dissemination only as directed by Commandant (CG-937) or higher Coast Guard authority.

D.4. Hydraulics System

The steering nozzles, reversing buckets and trim tabs are actuated by hydraulic cylinders. The hydraulic pressure is supplied by two hydraulic pumps located on the main diesel engines. The operator inputs are electronic signals, picked up by solenoid operated hydraulic valves on the port and starboard hydraulic manifolds in the Lazarette. The hydraulic pumps operate when the engines are running; the solenoids are active when the Kamewa Control system is energized.

Hydraulic fluid is cooled by oil coolers located atop the Waterjet inlet duct in the Engine Room. The oil coolers are welded to the top of the inlet ducts and transfer the heat from the hydraulic oil by means of conduction. The Hydraulic Tank is located in the Engine Room port side between frame 5 and 6. The hydraulic tank holds nine gallons of hydraulic fluid and has a built in FLOC system for changing fluid.

Draft
Further dissemination only as directed by Commandant (CG-937) or higher Coast Guard authority.

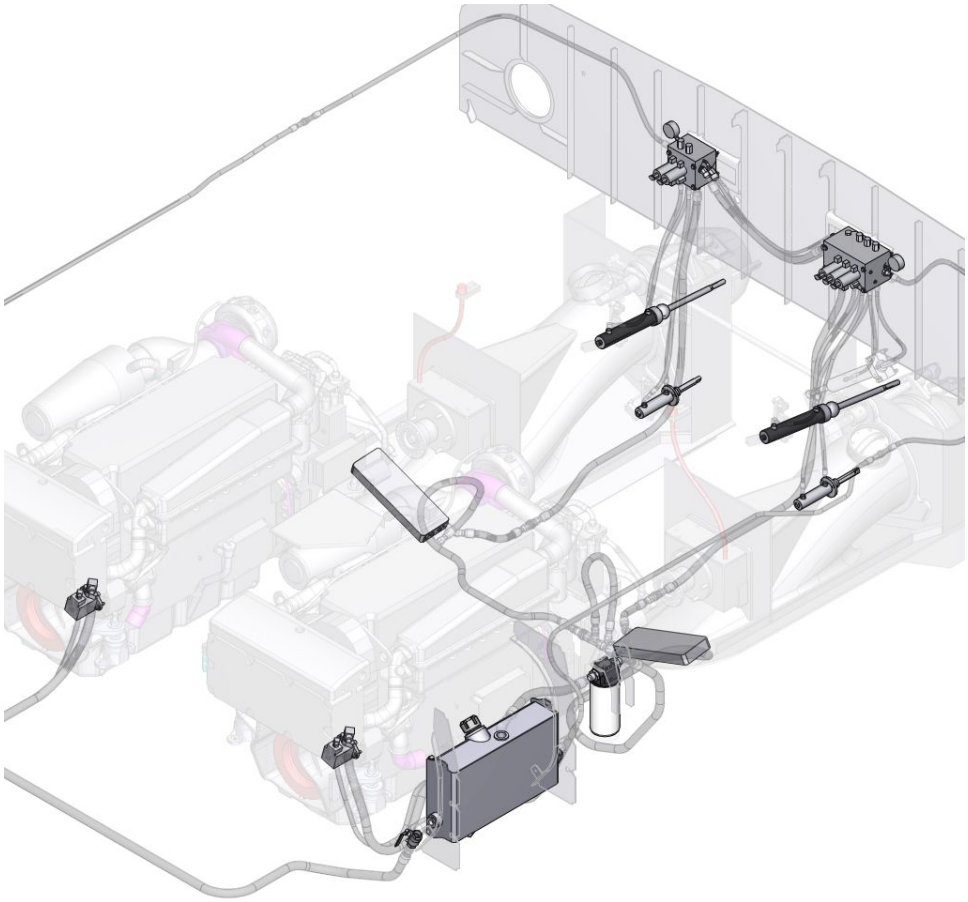

WATERJET

Figure 1

Draft
Further dissemination only as directed by Commandant (CG-937) or higher Coast Guard authority.

D.5. Steering Control

Vector Control Steering

CAUTION !

The water jet unit hydraulic system operates under extremely high pressure. This pressure may be high even when the engine is not operating. Always take great care when opening nipples. Carelessness can result in injury. In addition, the oil may be hot and cause scalding.

Steering is accomplished by moving either the port or the starboard tiller depending on the steering station selected by the vector mode selector button. The tiller provides electrical input to the control box. The autopilot provides electrical input to the control box when the autopilot is activated. Only one of the three steering modes may be active at any one time. The positions of the steering nozzles are indicated on the LCD Alarm Display Panel in the Upper Center Console.

Primary Steering - The RB-M has primary (Helm Position) and secondary (Navigator Position) helm steering stations utilizing joy sticks for controls. At the Helm and Navigator positions controls will provide steering, combined engine speed joystick, bucket control, Inceptor Trim Control, transfer button between Helm and Navigator position and docking/transit selector switch.

Secondary Steering - Using the SIMRAD AP25 07 Autopilot system you can steer the RB-M with the manual function and drive from the small knob control.

A Back-up Remote Control Box can be plugged into the back of the Helm Position lower console and the RB-M can be driven from the remote for an emergency return to the Station.

Interceptor Trim Tab Control

The Interceptor trim tab control panel provides electrical input to the hydraulic solenoid valves for raising or lowering the trim tabs. Trim tab control is available at both control stations and is transferred by the vector mode selector button. The positions of the trim tabs are indicated at the vector display panel in the pilothouse. The trim tabs are integrated with the steering controls to improve turning performance at high speeds.

Draft
Further dissemination only as directed by Commandant (CG-937) or higher Coast Guard authority.

Draft
Further dissemination only as directed by Commandant (CG-937) or higher Coast Guard authority.

E. Communications System

Introduction

All of the standard marine communications equipment is located in the Pilothouse, Survivors' Compartment and Auxiliary Machinery Compartment. The communications equipment consists of the following:

- Motorola XTL 5000 VHF Radio.
- Motorola XTL 5000 UHF Radio.
- Mobat Micom 3T HF-SSB Radio.
- Taiyo TD-L1550 Radio Direction Finder.
- Furuno LH-3000 Loudhailer.
- LVIS Crew Communication System.
- Standard Horizon GX5500S Class D VHF Radio Phone.

Draft
Further dissemination only as directed by Commandant (CG-937) or higher Coast Guard authority.

Draft
Further dissemination only as directed by Commandant (CG-937) or higher Coast Guard authority.

E.1. Motorola XTL 5000 VHF Radio

Motorola XTL 5000 VHF Radio

The Motorola XTL 5000 VHF Radio is used for communicating on VHF marine band frequencies. The VHF radio consists of:

- Motorola XTL 5000 VHF Transceiver.
- Remote O5 Control Head.
- VHF Antenna.
- Palm Microphone and Speaker.

Draft
Further dissemination only as directed by Commandant (CG-937) or higher Coast Guard authority.

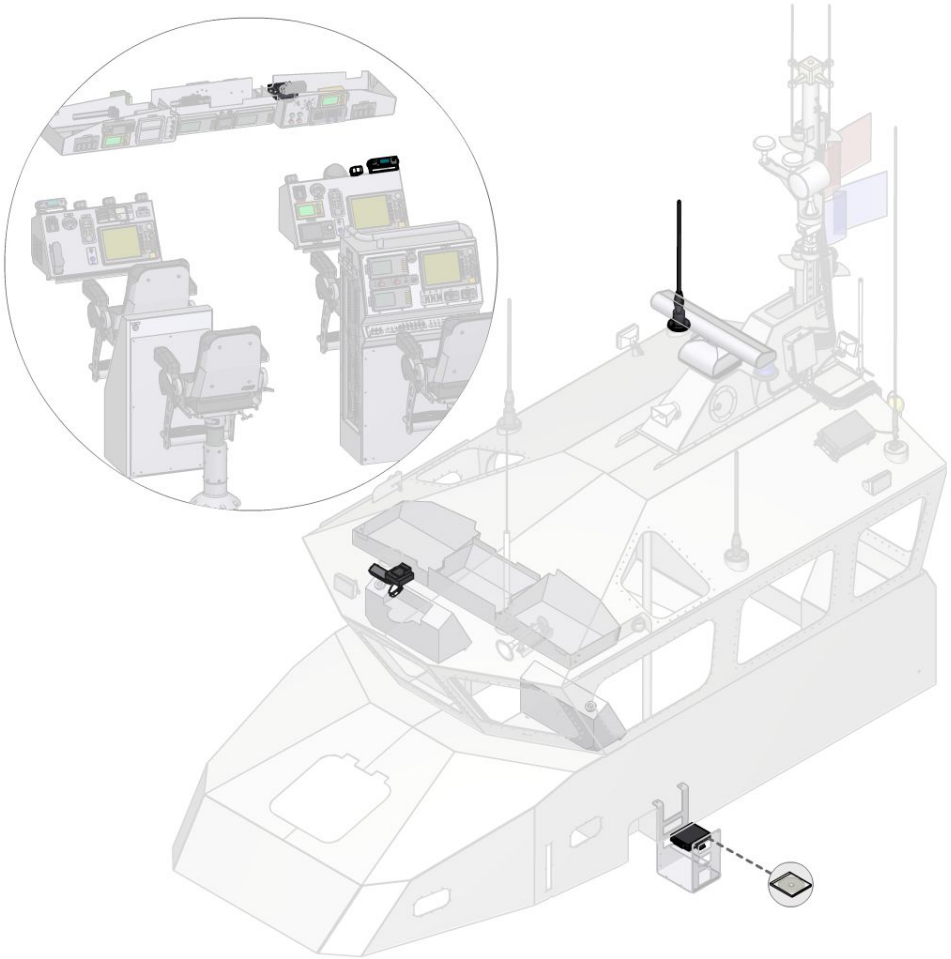

MOTOROLA XTL 5000 VHF RADIO

Figure 1

The radio operates in the 136-174 MHz range.

VHF Transceiver

The VHF Transceiver is located in the Auxiliary Machinery Compartment and is the interconnection point for:

- Remote O5 Control Head.
- VHF Antenna.
- LVIS Crew Communication System.

Draft
Further dissemination only as directed by Commandant (CG-937) or higher Coast Guard authority.

The transceiver has an LCD to provide channel and frequency information, can access 512 different channels, and be programmed to meet mission requirements.

The VHF Transceiver receives 12-VDC input from the 12P1 Distribution Panel.

Remote O5 Control Head

The Remote O5 Control Head is located atop the Lower Helm Console on the outboard side. The remote control head has the following features:

- 11-Character alphanumeric display.
- 512 Modes/Channels.
- Keypad for direct calling.
- Palm Microphone Interface.
- Speaker Interface.

The remote control head is connected to the transceiver through a control cable and receives 12-VDC input from the 12P1 Distribution System.

VHF Antenna

The VHF Antenna is a 3.5-ft heavy duty whip antenna. It is located on the starboard aft corner atop the Pilothouse. The antenna is connected to the transceiver through an antenna cable.

Palm Microphone and Speaker

The Palm Microphone and Speaker are located in the Pilothouse. The microphone is mounted atop the Lower Helm Console inboard of the Remote O5 Control Head. The speaker is mounted directly forward of the Upper Helm Console.

Operation

The VHF Radio is used for off-boat communications and is integrated with the Crew Communication System. Should the Crew Communication System fail, there is a back-up microphone stored in the navigator’s pouch adjacent to the navigation table on the port Pilothouse bulkhead. This microphone can be plugged into the jack located on the control head atop the Lower Helm Console.

Draft
Further dissemination only as directed by Commandant (CG-937) or higher Coast Guard authority.

Draft
Further dissemination only as directed by Commandant (CG-937) or higher Coast Guard authority.

E.2. Motorola XTL 5000 UHF Radio

Motorola XTL 5000 UHF Radio

The Motorola XTL 5000 UHF Radio is used for communicating on UHF marine band frequencies. The UHF radio consists of:

- Motorola XTL 5000 UHF Transceiver.
- Remote O5 Control Head.
- UHF Antenna.
- Palm Microphone and Speaker.

The radio operates in the 380-470 MHz range.

Draft
Further dissemination only as directed by Commandant (CG-937) or higher Coast Guard authority.

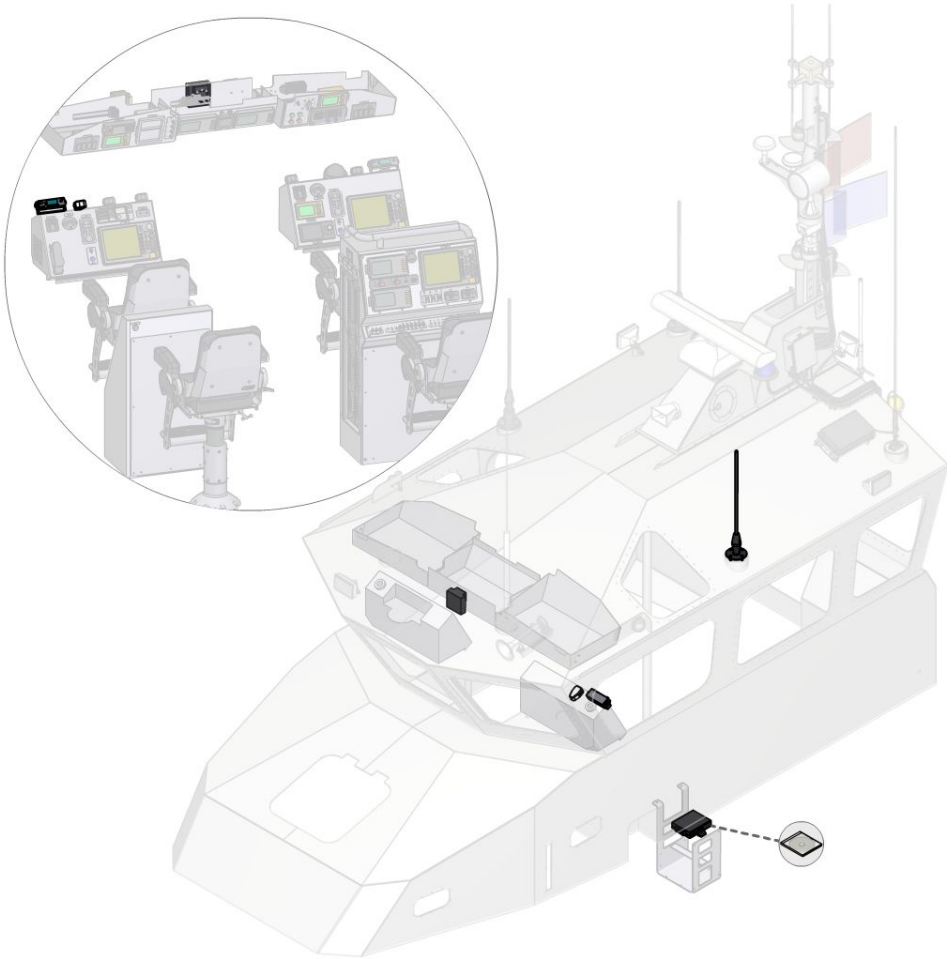

MOTOROLA XTL 5000 UHF RADIO

Figure 1

UHF Transceiver

The UHF Transceiver is located in the Auxiliary Machinery Compartment and is the interconnection point for:

- Remote O5 Control Head.
- UHF Antenna.
- LVIS Crew Communication System.

The transceiver has an LCD to provide channel and frequency information, can access 512 different channels, and be programmed to meet mission requirements.

Draft
Further dissemination only as directed by Commandant (CG-937) or higher Coast Guard authority.

The UHF Transceiver receives 12-VDC input from the 12P1 Distribution Panel.

Remote O5 Control Head

The Remote O5 Control Head is located atop the lower navigator console on the outboard side. The remote control head has the following features:

- 11-Character alphanumeric display.
- 512 Modes/Channels.
- Keypad for direct calling.
- Palm Microphone Interface.
- Speaker Interface.

The remote control head is connected to the transceiver through a control cable and receives 12-VDC input from the 12P1 Distribution System.

UHF Antenna

The UHF Antenna is an approximately 3-ft heavy duty whip antenna. It is located on the port side middle atop the Pilothouse. The antenna is connected to the transceiver through an antenna cable.

Palm Microphone and Speaker

The Palm Microphone and Speaker are located in the Pilothouse. The microphone is mounted atop the Lower Navigator Console inboard of the Remote O5 Control Head. The speaker is mounted directly forward of the Upper Center Console towards the port side.

Operation

The UHF Radio is used for off-boat communications and is integrated with the Crew Communication System. Should the Crew Communication System fail, there is a back-up microphone stored in the navigator's pouch adjacent to the navigation table on the port Pilothouse bulkhead. This microphone can be plugged into the jack located on the control head atop the Lower Navigator Console.

Draft
Further dissemination only as directed by Commandant (CG-937) or higher Coast Guard authority.

Draft
Further dissemination only as directed by Commandant (CG-937) or higher Coast Guard authority.

E.3. Mobat Micom 3T HF SSB Radio

Mobat Micom-3T HF SSB Radio

The Mobat Micom-3T HF SSB Radio is used for communicating on HF marine band frequencies with stations or maritime vessels are required. The HF Radio consists of:

- Micom-3T Transceiver.
- Micom-3 Remote 2W Control Head.
- Palm Microphone and Speaker.
- HF Antenna Tuner.
- HF Antenna.
- DC-DC Converter.
- KY-99A COMSEC (Secure Speech).
- Handset and Speaker.

The radio operates in the 1.6-30 Mhz range.

Draft
Further dissemination only as directed by Commandant (CG-937) or higher Coast Guard authority.

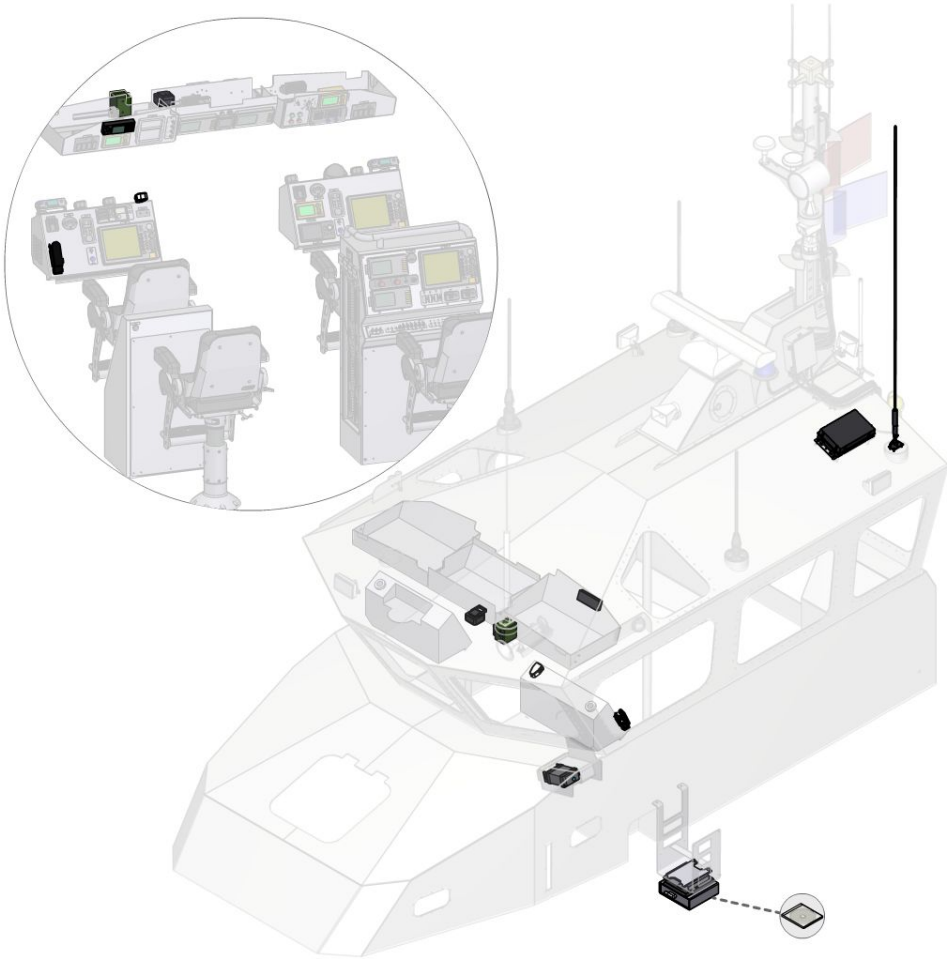

MOBAT MICOM-3T HF SSB RADIO

Figure 1

Micom-3T Transceiver

The Micom-3T Transceiver is located in the Auxiliary Machinery Compartment and provides the interconnection point for:

- Remote 2W Control Head.
- Antenna Tuner.
- Secure Communication System.

The transceiver can access up to 200 different channels, has built-in-test features, and can be programmed to meet mission requirements.

Draft
Further dissemination only as directed by Commandant (CG-937) or higher Coast Guard authority.

The Micom 3T Transceiver receives 12-VDC input from the MOBAT DC-DC Converter for radio operations.

Micom-3 Remote 2W Control Head

The Micom-3 Remote 2W Control Head is located in the Pilothouse mounted on the outboard side of the Upper Navigator Console. The remote control head provides the following features:

- LCD for channel and frequency monitoring.
- Keyboard for programming/set-up functions.
- Palm Microphone.
- Speaker Interface.

The remote control head is connected to the transceiver through a control cable.

Palm Microphone and Speaker

The Palm Microphone and Speaker are located in the Pilothouse. The microphone is mounted atop the inboard side of the Lower Navigator's Console. The speaker is mounted directly forward of the Upper Center Console.

HF Antenna Tuner

The Micom-2 HF Antenna Tuner is located atop the Pilothouse near the aft port corner and automatically tunes the antenna to the transceiver. The tuner monitors antenna conditions each time a channel is changed and retunes as required. The tuning time occurs within 1.5 seconds.

HF Antenna

The Micom HF SSB Antenna is a 6-ft heavy duty mobile whip antenna. It is located on the aft port corner atop the Pilothouse adjacent to the HF antenna tuner.

DC-DC Converter

The Mobat Micom-3T HF SSB Radio DC-DC Converter is located in the Auxiliary Machinery Compartment and provides 12-VDC for the radio system components. The converter is mounted above the Micom-3T Transceiver.

The DC-DC Converter receives 24-VDC from the 24P3 Distribution Panel.

KY-99 COMCSEC Secure Speech

Draft
Further dissemination only as directed by Commandant (CG-937) or higher Coast Guard authority.

The MINTERM KY-99A COMSEC Secure Speech device is used with the Micom-3T HF SSB radio for a secure voice and data encryption. The KY-99 is located on the port bulkhead of the Survivors' Compartment above the galley area.

Handset and Speaker

The H250U military style handset and MRC/67A speaker are used with the Micom-3T and KY-99A for secure communications. The handset is located on the port side of the Lower Navigator Console. The MRC/67A speaker is mounted to the overhead forward of the Upper Navigator Console on the port side.

Draft
Further dissemination only as directed by Commandant (CG-937) or higher Coast Guard authority.

E.4. Taiyo TD-L1550 VHF Automatic Direction Finder

TAIYO TD L-1550 VHF Automatic Direction Finder System

The TAIYO VHF Automatic Direction Finder System monitors the VHF band to pinpoint and provide direction information of radio signals to the navigation and coxswain stations. The system consists of:

- TAIYO Automatic Direction Finder.
- TAIYO Automatic Direction Finder Speaker
- Adcock ADF Antenna.

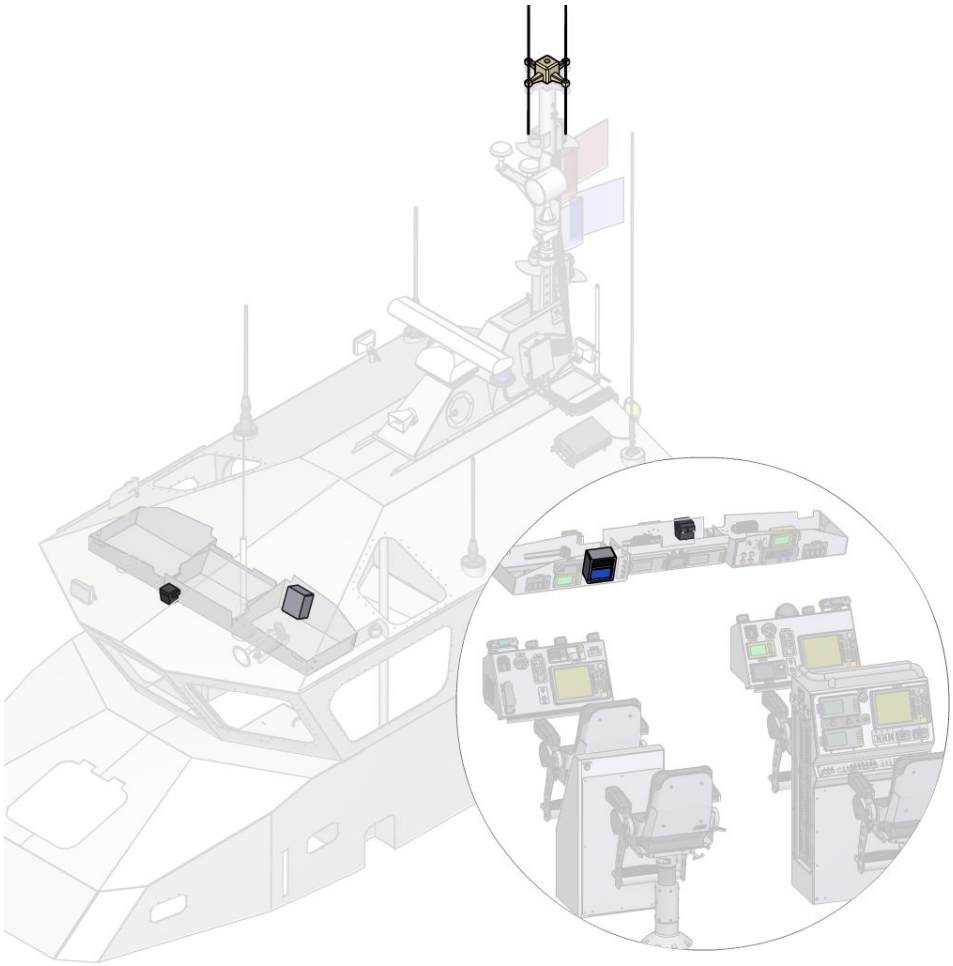

VHF AUTOMATIC DIRECTION FINDER SYSTEM

Figure 1

Draft
Further dissemination only as directed by Commandant (CG-937) or higher Coast Guard authority.

TAIYO ADF

The TAIYO ADF is located in the Pilothouse and displayed in the Upper Navigation Console. The ADF monitors the VHF band from 156.050 Mhz-162.475 Mhz, including the 121.5 Mhz AM Aeronautical Distress Frequency.

The TAIYO VHF ADF receives 12-VDC from the 12P1 Distribution Panel.

ADF Speaker

The ADF speaker is located in the Pilothouse on the forward side of the Upper Center Console.

ADF Antenna

The Adcock ADF Antenna is mounted at the top of the mast. The antenna receives signals and transmits them to the TAIYO TD L-1550 through an antenna cable.

Draft
Further dissemination only as directed by Commandant (CG-937) or higher Coast Guard authority.

E.5. Furuno LH-3000 Loudhailer

Furuno LH-3000 Loudhailer

The Furuno LH-3000 Loudhailer is a stand-alone communication system used to notify nearby vessels of RB-M presence and status, regardless of visibility conditions. It consists of the following:

- Loudhailer.
- 30-Watt Speaker.
- Palm Microphone.

LOUDHAILER

Figure 1

The LH-3000 Loudhailer receives 12-VDC input from the 12P1 Distribution Panel.

Loudhailer

The loudhailer is located in the Upper Helm Console below the RD-30 Display and is the interconnection point for:

- Loudhailer Speaker.
- Palm Microphone.
- External Alarm Relay (EAR).

The LH-3000 Loudhailer has the following characteristics/capabilities:

- LED indicators for equipment status.
- Backlit keypad for nighttime operations.
- Six automatic international hailer warning signals (UNWY, SAIL, TOW, STOP, ANCH, AGND).
- Two manual hail warning signals (YELP and “ON/OFF”).

When the boat is in-port and the EAR is activated, the loudhailer provides external warning to the station personnel for fire/flooding alarms.

Loudhailer Speaker

Draft
Further dissemination only as directed by Commandant (CG-937) or higher Coast Guard authority.

The Loudhailer Speaker is located atop the Pilothouse centerline forward of the radar.

Palm Microphone

The microphone is mounted atop the Lower Helm Console inboard towards the centerline.

Draft
Further dissemination only as directed by Commandant (CG-937) or higher Coast Guard authority.

E.6. Kahlenberg Air Horn

Kahlenberg Air Horn System

The Kahlenberg Air Horn System is an audible communication used during all types of weather conditions to inform/warn other boats/ships of operating status. The system consists of:

- Air Horn.
- Horn Pushbutton Switches (2).
- Horn Solenoid Valve.

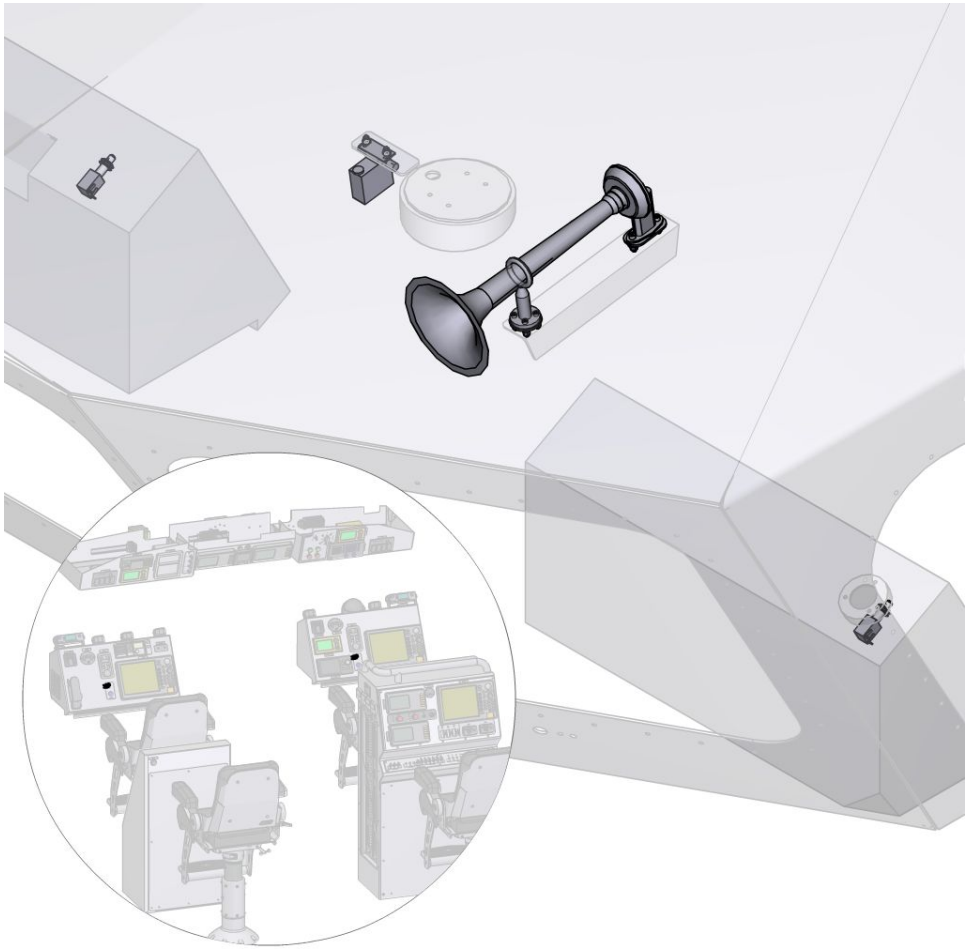

AIR HORN

Figure 1

Draft
Further dissemination only as directed by Commandant (CG-937) or higher Coast Guard authority.

Air Horn

The Air Horn is mounted atop the Pilothouse forward port side. Air is supplied to the horn through a 5/16” nylon air hose. When activated, air consumption for the horn is 9 CFM at 100 PSIG.

The Air Horn uses low pressure air from the Compressed Air System.

Horn Pushbutton Switches

The Horn Pushbutton Switches are momentary activated switches used to operate the air horn. The switches are located in the Pilothouse at the Lower Helm Console and the Lower Navigator Console below the FLIR controls.

When the switch is depressed, the Horn Solenoid Valve energizes and opens to allow low pressure air to flow to the air horn. When the switch is released, the solenoid valve de-energizes and closes.

The Horn Pushbutton Switch receives 24-VDC from the 24P1 Distribution Panel.

Horn Solenoid Valve

The Horn Solenoid Valve is located in the Pilothouse overhead forward of the Upper Center Console and controls the flow of air to the air horn. When activated, the solenoid valve opens, allowing air from the Air Receiver to flow to the air horn.

The Horn Solenoid Valve is activated by the horn pushbutton switches.

Draft
Further dissemination only as directed by Commandant (CG-937) or higher Coast Guard authority.

E.7. LVIS Crew Communications System

LVIS Crew Communication System

The LVIS Crew Communication System is an integrated hardwired and wireless communication system for all RB-M evolutions. The communication system consists of the following:

- Intercom Control.
- TruLink Access Point.
- Crew Connection Points.
- Portable Transceivers.
- Headsets.

Draft
Further dissemination only as directed by Commandant (CG-937) or higher Coast Guard authority.

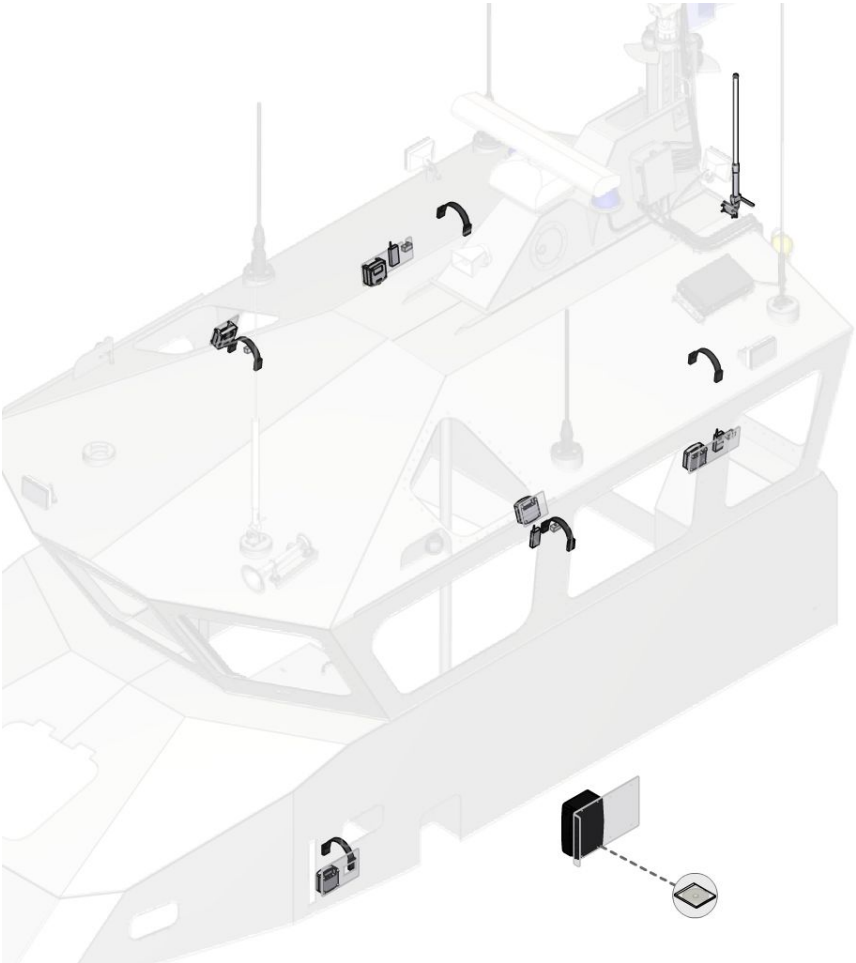

LVIS

Figure 1

The LVIS Crew Communication System operates on 24-VDC input.

Intercom Control

The LVIS Intercom Control is located in the Auxiliary Machinery Room and provides the interface for the crew connection points and the RB-M Communication Systems. The Intercom Control can be programmed locally or remotely at the Crew Connection Points to meet mission requirements.

The Intercom Control receives 24-VDC from the 24P1 Distribution Panel.

TruLink Access Point

Draft
Further dissemination only as directed by Commandant (CG-937) or higher Coast Guard authority.

The TruLink Access Point is located in the Auxiliary Machinery Space and is integrated with the Intercom Control to provide for hands-free, wireless communication. Wireless communication is accomplished through the use of portable transceivers and a wireless antenna.

Crew Connection Point

The LVIS System has five (5) crew connection points to support various crew communication equipment. The Crew Connection Points are located:

- Coxswain Control Station.
- Navigator's Control Station.
- Primary Crew Station.
- Alternate Crew Station.
- Survivor's Cabin.

Each connection point provides the following:

- Hardwired access for crew headgear.
- Independent selection of receive/transmit capability over any of the interconnected RB-M Radio Systems (programmed through the Intercom Control).
- Charging of Portable Transceivers.

The LVIS Crew Connection Points directly interface with the Intercom Control.

Portable Transceiver

The Portable Transceiver provides the crew with wireless communications to support and meet mission requirements. The transceivers have programmable PTT or VOX operation, has independent listen level control, and programmable options similar to the crew connection points.

The Portable Transceiver is charged when connected to a Crew Connection Point.

Draft
Further dissemination only as directed by Commandant (CG-937) or higher Coast Guard authority.

Draft
Further dissemination only as directed by Commandant (CG-937) or higher Coast Guard authority.

E.8 Standard Horizon GX5500S VHF Radio Phone

Standard Horizon GX5500S VHF Radio Telephone

The Standard Horizon GX5500S Class D VHF Radio Telephone is a multi-use radio telephone for general communications and safety-at-sea. The system consists of:

- GX5500S Transceiver.
- Antenna.

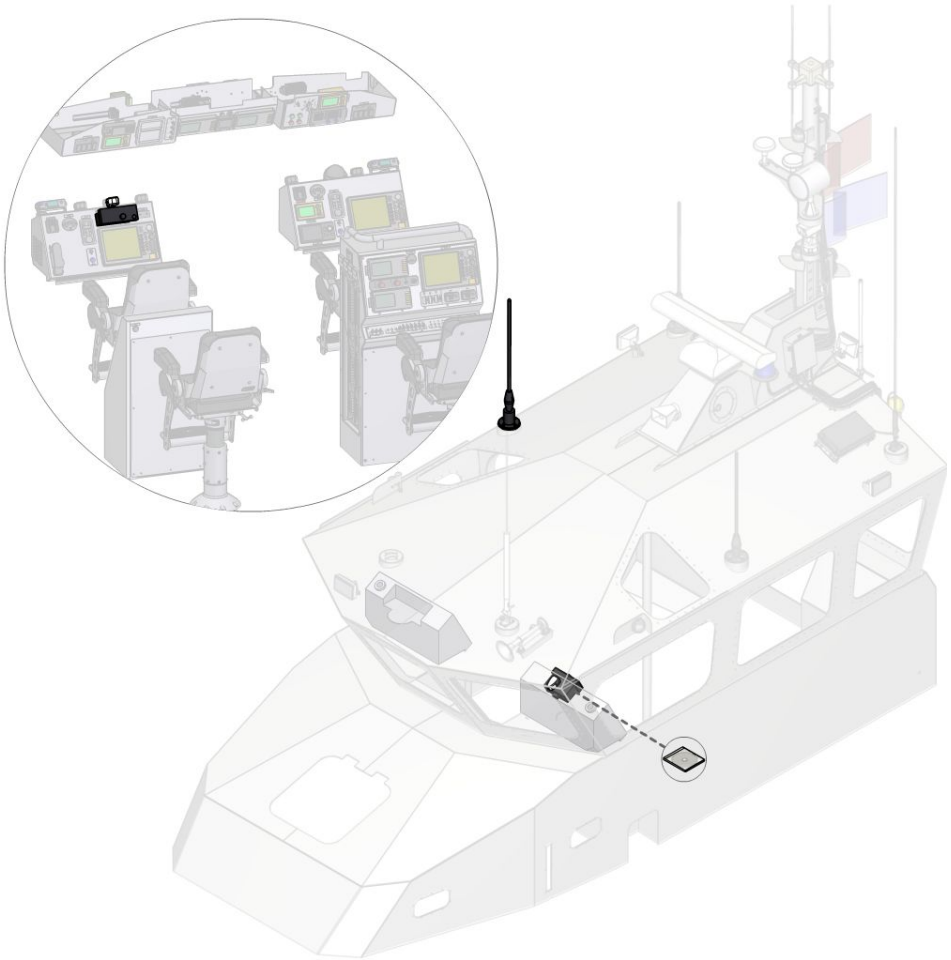

VHF RADIO TELEPHONE

Figure 1

GX5500S Transceiver

Draft
Further dissemination only as directed by Commandant (CG-937) or higher Coast Guard authority.

The GX5500S Transceiver is flush-mounted in the Lower Navigator Console above the chart plotter. The 25-watt transceiver provides for Class D Digital Select Calling (DSC) operations and a Channel 70 watch receiver. The transceiver is connected to a VHF antenna to support various communication requirements. The GX5500S has the following characteristics:

- LCD Display.
- Microphone.
- Internal Speaker.
- Distress Pushbutton.
- Keypad.
- Miscellaneous Controls.

The transceiver also provides for instant access to Channel 16 from any channel by depressing the red 16/9 key. NOAA Weather channels can also be accessed immediately by pressing the WX key.

The GX5500S Transceiver is interconnected with the GPS System and Lower Navigator Console Chart Plotter to receive GPS data. The transceiver also interfaces with the crew communication system to provide a more flexible communication system to support mission requirements.

The GX5500S Transceiver receives 12-VDC from the 12P1 Distribution Panel.

Antenna

The antenna is a 3.5-ft heavy duty whip antenna located on the starboard side middle atop the Pilothouse. It is connected directly to the GX5500S Transceiver and provides for various radio telephone operations and communication channel monitoring to support mission requirements.

Draft
Further dissemination only as directed by Commandant (CG-937) or higher Coast Guard authority.

F. Navigation System

Introduction

The RB-M utilizes a Scalable Integrated Navigation System (SINS) built around the Furuno NavNet Radar/Chart Plotter System. This navigation equipment is designed and integrated to maximize the crew's effort in completing assigned missions. The SINS includes the following systems/equipment:

- Furuno 1934C/NT Radar/Chart Plotter System.
- Furuno RD30 Remote Display.
- Differential Global Positioning System (DGPS).
- Ritchie Voyager Magnetic Compass.
- Furuno PG500R Heading Sensor.
- Depth Sounder System.
- Furuno NAVPILOT-500 Auto Pilot System
- Thermovision Forward Looking Infrared (FLIR) System.
- Ethernet Hub.

Draft
Further dissemination only as directed by Commandant (CG-937) or higher Coast Guard authority.

Draft
Further dissemination only as directed by Commandant (CG-937) or higher Coast Guard authority.

F.1. Furuno 1934C/NT Radar/Plotter System

Furuno 1934C/ NT Radar/ Chart Plotter System

The Furuno 1934C/NT Radar Chart Plotter System provides radar information for navigation and mission planning. The Radar/Chart Plotter System consists of:

- RDP 149/NT Chart Plotter (3).
- Furuno Radar Array and Antenna Unit.

Created with UNREGISTERED version of Eltima SWF & FLV Toolbox

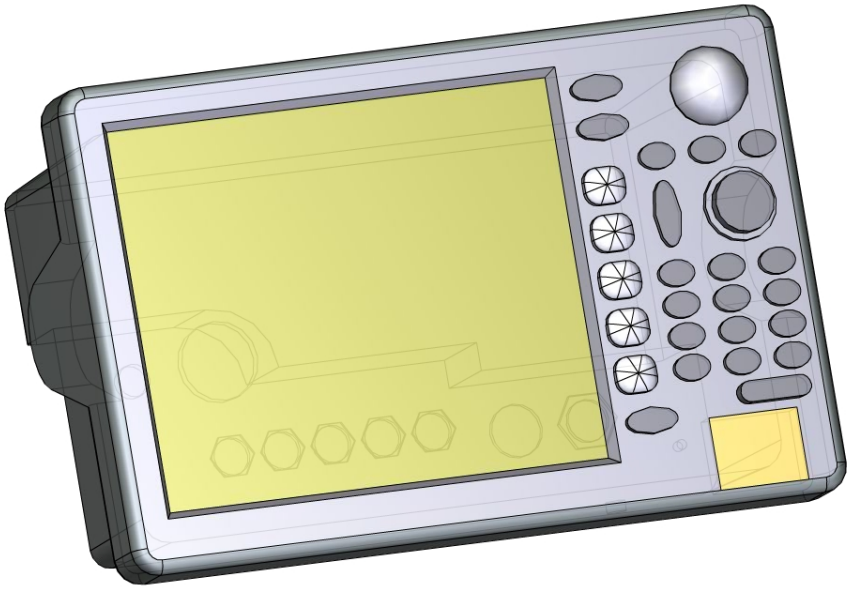

Visit www.eltima.com to purchase a license

RADAR

Figure 1

RDP 149/NT Chart Plotter

Draft
Further dissemination only as directed by Commandant (CG-937) or higher Coast Guard authority.

There are three RDP 149/NT Chart Plotters located in the Pilothouse. Each plotter has a 10.4 Liquid Crystal Display (LCD), associated function controls for display set-up, an ARP-11 Auto Plotter Module and a Video Interface Module.

The chart plotters function as follows:

- The chart plotter located on the inboard side of the Lower Navigator Console functions as the surface radar/chart plotter. It utilizes a power transceiver for reliable operation in all types of weather. This true color radar displays six levels of target density and is capable of tracking storms. The radar incorporates head-up, course-up, north-up, and true motion display modes. The range scales are from 0.125 to 48 NM, 16-step increments. The echo trail intervals available are 15 seconds, 30 seconds, 1, 3, 6, 15, and 30 minutes, or continuous.
- The chart plotter located on the outboard side of the Lower Helm Console functions as a chart plotter. This chart plotter receives input from the ethernet hub to display data. The chart plotter also provides output to the RD-30 Remote Display in the Upper Helm Console.
- The chart plotter located on the outboard side of the Primary Crew Console functions as a chart plotter. This chart plotter receives input from the Ethernet hub and the AIS to display data. GPS Data is also provided back to the ethernet hub for use by the rest of the navigation system.

The plotters have a memory capacity of up to 8,000 points for the boat's track and marks, 999 waypoints, 35 quick points, 1 Man Overboard (MOB), and 200 planned routes. Display modes include course plot, navigation data, steering display, and highway. Plot interval is adjustable from 1 second to 59 minutes, 59 seconds or 0.01 to 9.99 NM. Alarms available are guard zone, arrival/anchor watch, proximity alert, ship's speed, water depth and temperature, and cross track error (XTE). A save MOB function will immediately mark the MOB position and display the range and bearing of the man overboard location on the display.

Each chart plotter can receive video input from the FLIR Camera through the video amplifier. The chart plotter in the Primary Crew Console receives video input from the FLIR Camera or Engine Rooom Camera through a video selector switch on the console.

Furuno Radar Array and Antenna Unit

The Furuno 1934C/NT Radar/Chart Plotter System receives radar information from a radar array and antenna unit. The Furuno Radar Array is a 3.5-foot open array

Draft
Further dissemination only as directed by Commandant (CG-937) or higher Coast Guard authority.

antenna and is mounted on the antenna unit. The array has a 2.2 degree horizontal beam width and a 22 degree vertical beam width, with a maximum range of 48 NM. The Furuno Antenna Unit contains a robust gearbox that rotates the radar array at 24 RPM and contains a 4kW transceiver. The antenna unit is mounted on top of the Pilothouse forward of the mast.

Draft
Further dissemination only as directed by Commandant (CG-937) or higher Coast Guard authority.

Draft
Further dissemination only as directed by Commandant (CG-937) or higher Coast Guard authority.

F.2. Furuno RD30 Remote Display

RD-30 Remote Display

There are two RD-30 remote displays located in the Pilothouse. The display utilizes a wide variety of navigation data and displays it in digital and analog (graphic) formats. The multi-display uses input from the depth/temperature sensor, radar, WAAS/DGPS receiver/antenna, and the PG-500R heading sensor to provide essential navigational information. The unit features a 4½-inch backlit LCD and has five user programmable displays. The RD-30 has ten conditions that can trigger audio and visual alarms:

- Speed
- Water temperature
- Depth
- Arrival/anchor watch
- XTE
- Trip distance (two alarms)
- Countdown timer
- Alarm clock
- No position fixing
- No position data

Draft
Further dissemination only as directed by Commandant (CG-937) or higher Coast Guard authority.

DISPLAY

Figure 1

Upper Helm Console Display

The display is located in the center of the console above the loudhailer. The display receives data from the chart plotter display located in the Lower Helm Console.

The Upper Helm Console RD-30 receives 24-VDC from the 24P3 Distribution Panel.

Lower Helm Console Display

The display is located on the inboard side of the console above autopilot controller. The display receives data from the chart plotter display located in the Lower Navigator Console.

Draft
Further dissemination only as directed by Commandant (CG-937) or higher Coast Guard authority.

The Lower Helm Console RD-30 receives 24-VDC from the 24P1 Distribution Panel.

Draft
Further dissemination only as directed by Commandant (CG-937) or higher Coast Guard authority.

Draft
Further dissemination only as directed by Commandant (CG-937) or higher Coast Guard authority.

F.3. Differential Global Positioning System (DGPS)

GP-37 Differential Global Positioning System

The GP-37 Differential Global Positioning System (DGPS)/Wide Area Augmentation System (WAAS) Navigator is an integrated DGPS receiver and video plotter. The receiver can track up to 13 satellites (12 DGPS, 1 WAAS) simultaneously, providing the following position accuracy:

- DGPS: 5 meters or better
- WAAS: 3 meters or better

The GP-37 DGPS receives 24-VDC from the 24P1 Distribution Panel.

NOTE

WAAS is not currently approved for use by Coast Guard vessels. In the AUTO mode, the GP-37 runs with DGPS as the default setting. If the DGPS signal is lost for any reason, the WAAS mode is automatically selected.

The GP-37 DGPS consists of the following:

- GP-37 Display/Receiver Unit
- GPA-019 Antenna Unit

Draft
Further dissemination only as directed by Commandant (CG-937) or higher Coast Guard authority.

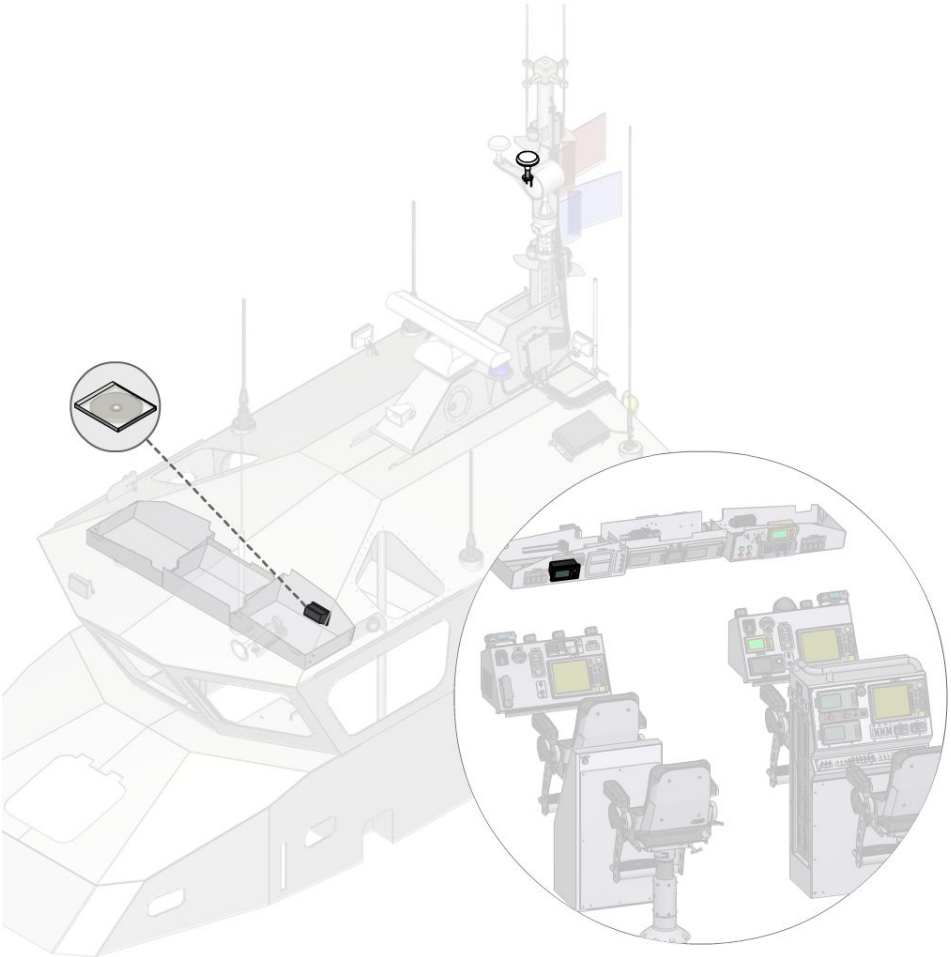

GLOBAL POSITIONING SYSTEM

Figure 1

GP-37 Display/Receiver Unit

The GP-37 Display/Receiver Unit is flush-mounted in the Upper Navigator Console. The display/receiver unit has a 4.5-inch silver bright LCD that provides various display modes:

- Plotter.
- Steering.
- Speedometer.
- Highway.

Draft
Further dissemination only as directed by Commandant (CG-937) or higher Coast Guard authority.

- Two customizable displays.

The GP-37 also has five available alarm functions, memory capacity of 1000 points of vessel track, 999 waypoints or marks, and 50 routes comprised of up to 30 waypoints, and a MOB feature.

GPA-019 Antenna Unit

The GPA-019 Antenna Unit is mounted on the lower starboard side of the mast. A 10-meter cable provides interconnection to the GP-37 Display/Processor Unit.

Draft
Further dissemination only as directed by Commandant (CG-937) or higher Coast Guard authority.

Draft
Further dissemination only as directed by Commandant (CG-937) or higher Coast Guard authority.

F.4. Ritchie Voyager Magnetic Compass

Magnetic Compass

A Ritchie magnetic compass is mounted directly in front of the coxswain at the Lower Helm Console. It is the standby or backup compass used for navigation. The compass model number is DNB200. The compass contains an internal gimbal system for maximum stability during adverse weather conditions. Built-in compensators provide for easy compass deviation adjustments. A deviation table should be developed, kept up to date annually, and posted in the Pilothouse. The blue dial is calibrated in white 5-degree increment markings. Lubber lines are provided at 45 degrees.

Draft
Further dissemination only as directed by Commandant (CG-937) or higher Coast Guard authority.

Draft
Further dissemination only as directed by Commandant (CG-937) or higher Coast Guard authority.

F.5. Furuno PG500R Heading Sensor

PG-500R Heading Sensor

The PG-500R Heading Sensor is mounted horizontally below the aft most deckplate of the Survivors' Compartment on the centerline. The sensor detects terrestrial magnetism and produces heading data, which can be utilized by navigation system components that need accurate and stable heading input. The heading accuracy of the sensor is ±1 degree. The PG-500R provides an output signal to the following systems:

- Furuno 1934C/NT Radar/Chart Plotter System.
- Furuno NAVPILOT-500 Auto Pilot System.

Draft
Further dissemination only as directed by Commandant (CG-937) or higher Coast Guard authority.

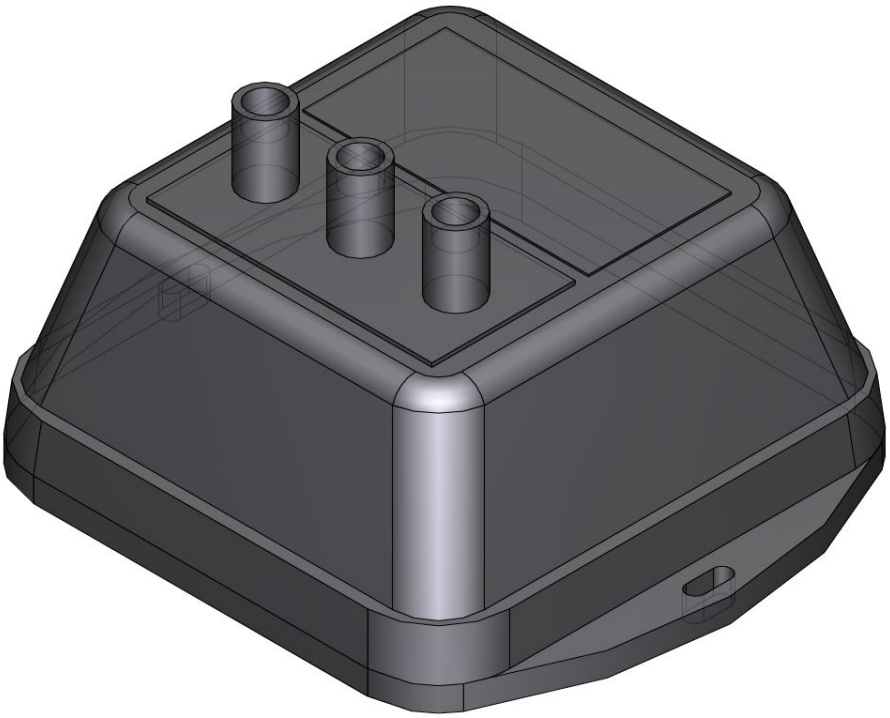

ELECTRONIC COMPASS

Figure 1

The heading sensor has a self-test that checks the circuit board and keys for proper operation. The heading sensor front panel has four LED indicators and three keys for monitoring and control during startup and operation.

The PG-500R Heading Sensor receives 24-VDC from the 24P3 Distribution Panel.

Draft
Further dissemination only as directed by Commandant (CG-937) or higher Coast Guard authority.

F.6. Depth Sounder System

Depth Sounder System

The Depth Sounder System provides the depth of the water under the boat keel for use in the Navnet Navigation System. The system consists of:

- Furuno Network Sounder.
- AIRMAR 555-SLDT/20 Depth Transducer.

CAUTION !

The depth transducer may not read accurately at high speeds in aerated water.

Network Sounder

The Furuno Network Sounder is located in the Auxiliary Machinery Room and receives a signal input from the depth transducer. The Network Sounder processes this signal and sends the information to the Navnet Ethernet Hub for distribution to the Navigation System.

The Network Sounder receives 24-VDC from the 24P1 Distribution Panel.

Depth Sensor

The AIRMAR 555-SLDT/20 Thru-Hull Depth Transducer is located in the Lazarette. The stainless steel unit contains a 50/200kHz dual frequency single ceramic element with the following operating features:

- Good target detail in shallow water at 200 kHz
- Good deep water bottom tracking at 50 kHz

The depth transducer is designed for boats with a dead-rise angle between 16° and 24°. As the boat changes speed, the element inside the transducer housing moves to compensate for the angle change to provide an accurate depth reading.

The depth transducer provides input to the Network Sounder.

Draft
Further dissemination only as directed by Commandant (CG-937) or higher Coast Guard authority.

Draft
Further dissemination only as directed by Commandant (CG-937) or higher Coast Guard authority.

F.7. NAVPILOT-500 Autopilot System

NAVPILOT-500 Auto Pilot System

The NAVPILOT-500 Autopilot System is an automated electronic control input for the Kamewa Waterjet Steering System. The system is made up of the following equipment:

- FAP-5001 Control Unit.
- FAP-5002 Computer Processor Unit.
- FAP-6111 Rudder Reference Unit.

When activated, the autopilot system maintains the course selected at the Lower Helm Console.

FAP-5001 Control Unit

The FAP-5001 Control Unit is located on the lower left corner of the Lower Helm Console. It contains a 4.6-inch LCD readout for autopilot data, various mode keys and a rotary course knob. The function of the control panel is:

- Receive power and feedback information from the FAP-5002 Computer Processor Unit.
- Send mode and course selection information to the FAP-5002 Computer Processor Unit.

FAP-5002 Computer Processor Unit

The FAP-5002 Computer Processor Unit is located in the Auxiliary Machinery Room and is the heart of the NAVPILOT-500 Autopilot System. The FAP-5002 Computer Processor Unit has the following steering-related inputs:

- FAP-5001 Control Unit.
- FAP-6111 Rudder Reference Unit.
- PG-500R Heading Sensor.
- Primary Crew Console RDP 149/NT Chart Plotter.

The steering computer uses the steering inputs to generate an output signal to the Vector Controls when autopilot is in use.

Draft
Further dissemination only as directed by Commandant (CG-937) or higher Coast Guard authority.

The FAP-5002 Computer Processor Unit receives 24-VDC from the 24P3 Non-Vital Distribution Panel.

FAP-6111 Rudder Reference Unit

The FAP-6111 Rudder Reference Unit is located in the Lazarette and is mechanically linked to the turning arm on the starboard jet-drive. The FAP-6111 Rudder Reference Unit transforms the angular travel of the turning arm position to a digital signal, which is transmitted to the FAP-5002 Computer Processor Unit.

Draft
Further dissemination only as directed by Commandant (CG-937) or higher Coast Guard authority.

F.8. Navigator Forward Looking Infrared (FLIR) System

Navigator Forward Looking Infrared (FLIR) System

The Navigator Forward Looking Infrared (FLIR) Camera System is a powerful thermal imager used for maritime navigation, search and rescue, and security applications. It makes navigation safer by providing the following abilities, regardless of lighting conditions:

- See in total darkness
- See through light fog
- See through smoke
- Identify obstructions, buoys, and other vessels at night

The Navigator FLIR System consists of:

- Navigator Pan and Tilt Camera Assembly
- Two Remote Joystick Control Units

The imagery from the camera is sent to the 1934C/NT Radar/Chart Plotter System for viewing at the Lower Navigator Console, Lower Helm Console, and Primary Crew Console Chart Plotters.

The Navigator FLIR Camera System receives 12-VDC from the 12P1 Distribution Panel.

Pan and Tilt Camera Assembly

The Navigator Pan and Tilt Camera Assembly is located on the lower forward port mount of the mast, below the searchlight. The assembly has a remote controlled pan and tilt that displays images of thermal activity in the direction of the lens. The Pan and Tilt Camera Assembly characteristics are:

- 360 degree pan view
- +/- 45 degree tilt view (relative to the horizon)
- 36 degree horizontal x 27 degree vertical camera lens view
- 2X Zoom Lens
- Detection range for vessels and objects varies depending on size and temperature

Draft
Further dissemination only as directed by Commandant (CG-937) or higher Coast Guard authority.

- Automatic Window Heater to prevent icing

The FLIR Camera is fully automatic, requiring no adjustments by the operator.

Remote Joystick Control Unit

There are two remote Joystick Control Units (JCU) located in the Pilothouse. One is located at the Lower Helm Console. The other is located at the Lower Navigator Console. Each JCU has a joystick to manipulate camera position and a touchpad to control the following camera functions:

- ON/OFF touchpad control: Energize/de-energize the FLIR System.
- SCENE touchpad control: Cycles through the four camera settings (Night Running, Man Overboard, Day Running, and Night Docking).
- ZOOM touchpad control: Selects between 1X and 2X zoom setting, observing correct image movement on a chart plotter.
- B/W touchpad control: Cycles through the video image modes (Black Hot, White Hot, or Red Hot).
- HOME touchpad control: Returns the camera to the home position.

Both JCUs are active at the same time to control the camera.

Draft
Further dissemination only as directed by Commandant (CG-937) or higher Coast Guard authority.

F.9. Ethernet Hub

Ethernet Hub

The PSEA Ethernet Hub is located in the Auxiliary Machinery Compartment on the aft bulkhead centerline. The hub is a 6-port, marinized ethernet switch that routes navigation network information between all interconnected systems/equipment. The interconnected systems/equipment are:

- Depth Sounder System.
- Lower Navigator Console GD 1934C/NT Radar/Chart Plotter.
- Lower Helm Console GD 1934C/NT Radar/Chart Plotter.
- Primary Crew Console GD 1934C/NT Radar/Chart Plotter.

The PSEA Ethernet Hub receives 12-VDC from the 12P1 Distribution Panel.

Draft
Further dissemination only as directed by Commandant (CG-937) or higher Coast Guard authority.

ETHERNET HUB

Figure 1

Draft
Further dissemination only as directed by Commandant (CG-937) or higher Coast Guard authority.

G. Electrical System

Introduction

The RB-M electrical system includes both AC and DC power distribution systems. The systems consist of:

- AuraGen IPS.
- AC Power Distribution.
- DC Power Distribution.
- Shore Power Distribution.
- Batteries.
- Battery Controls.
- Battery Charger.
- DC-DC Converters.

Draft
Further dissemination only as directed by Commandant (CG-937) or higher Coast Guard authority.

Draft
Further dissemination only as directed by Commandant (CG-937) or higher Coast Guard authority.

G.1. Generators

Generators

Electrical power is supplied by two Auragen Power Generation Systems. The Auragen Power Generation System consists of:

- Auragen Viper G8500X Induction Power Source (IPS)
- Electronic Control Unit/Inverter Charging System (ECU/ICS)
- ICS Control Panel

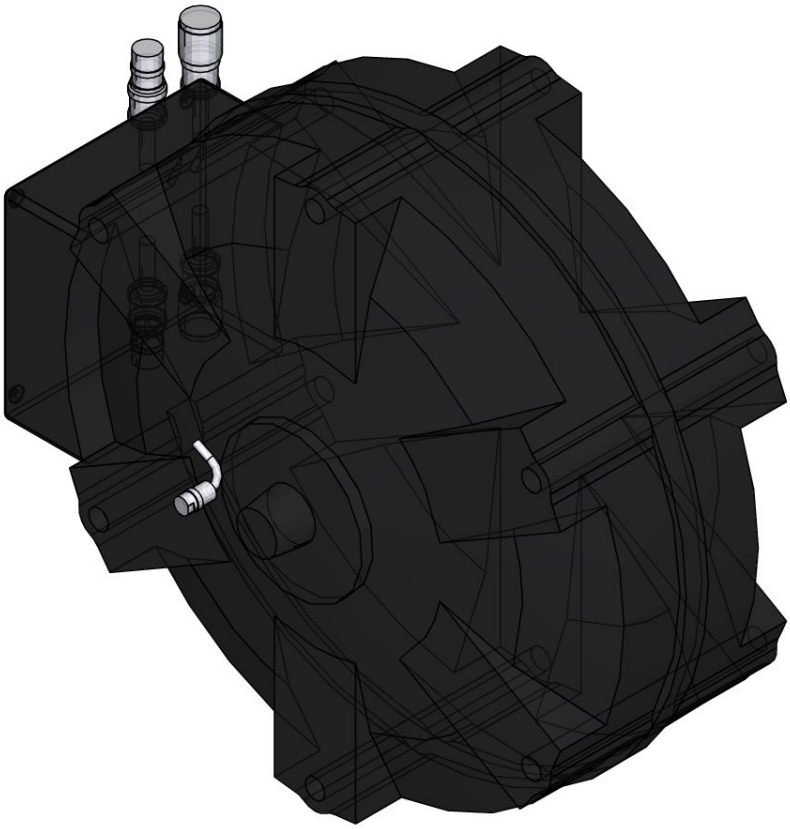

BELT DRIVEN GENERATOR

Figure 1

Draft
Further dissemination only as directed by Commandant (CG-937) or higher Coast Guard authority.

Auragen IPS

The IPS is a brushless AC axial gap three-phase induction power unit that is mounted at the front of each diesel engine. Each IPS is belt-driven through the diesel engine power take-off shaft (**(Refer to Figure 2)**). The Auragen IPS has the following rating:

- 120/240 VAC
- 60 Hz
- 8.5 kW

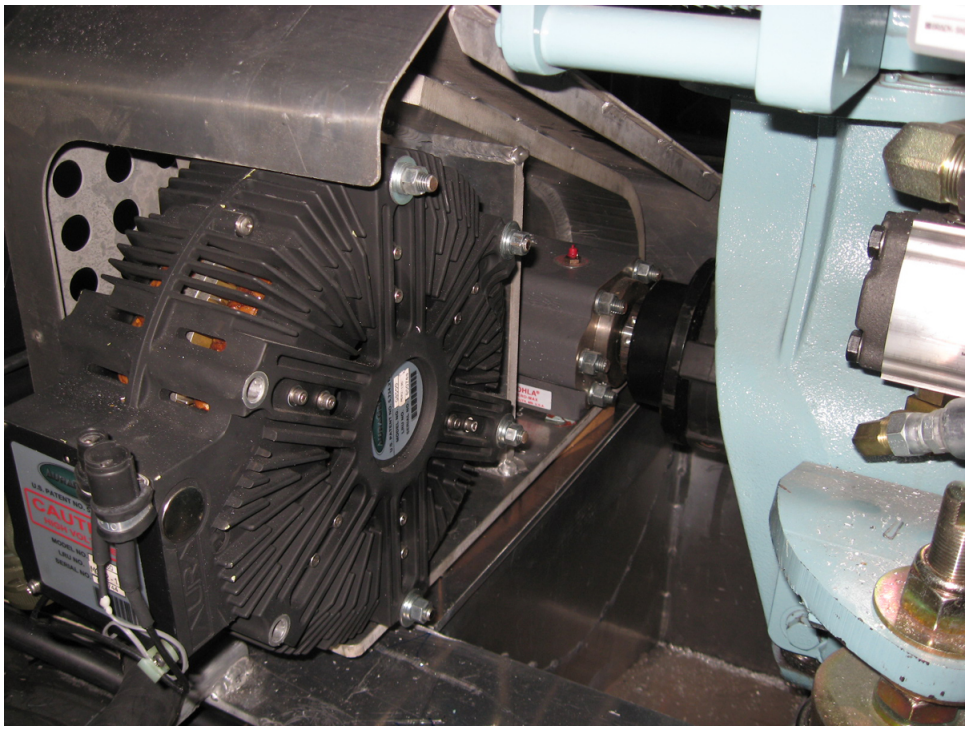

AURAGEN IPS

Figure 2

The IPS provides AC power to the ECU/ICS for conditioning and distribution to the AC and DC Power Distribution Systems.

Auragen ECU/ICS

Draft
Further dissemination only as directed by Commandant (CG-937) or higher Coast Guard authority.

Each Auragen IPS supplies AC Power to an associated Electronic Control Unit/ Invert Charger System (ECU/ICS). The Auragen ECU/ICS conditions and regulates output power to the AC and DC Power Distribution Systems.

The ECU/ICS inputs/outputs are:

- Inputs:
  - Auragen IPS AC Power
  - Auragen IPS RPM
  - Auragen IPS Temperature
- Outputs:
  - 120/240 VAC 60 Hz
  - 24-VDC

The ECU/ICS receives power from the Auragen IPS and converts it to DC voltage. Once converted, the ECU/ICS provides a regulated 24-VDC for battery charge and the DC Power Distribution System. It also inverts the DC voltage to AC voltage (when selected by the AC Power ON/OFF Control Switch on the ICS Control Panel) for the AC Power Distribution System.

The ECU/ICS are located in the Auxiliary Machinery Compartment and are mounted to the hull using vibration isolation mounts. It has two cooling fans to keep the internal electronic components within operating temperatures (**(Refer to Figure 3)**).

Draft
Further dissemination only as directed by Commandant (CG-937) or higher Coast Guard authority.

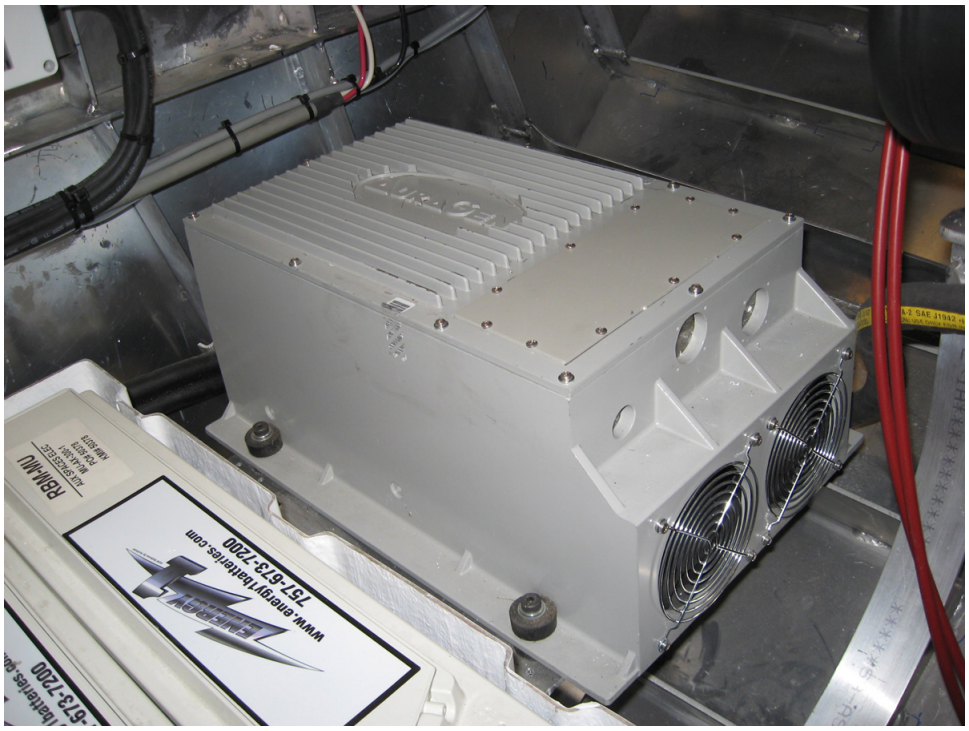

ECU/ICS

Figure 3

Auragen ICS Control Panel

Each Auragen ECU/ICS has an associated control panel for control and monitoring of the Auragen Power Generation System. The control panels are located in the Pilothouse at the Primary Crew Console.. The control panel provides the following controls and indicators:

- AC Power ON/OFF Control Switch
- BAT Indicator: indicates the status of the Battery Charge.
- GEN Indicator: indicates the status of the Auragen IPS
- CHG Indicator: indicates the status of the ECU/ICS Battery Charger
- AC Indicator: indicates the status of AC Power output from the ECU/ICS

Each indicator has three different color LEDs (Green/Yellow/Red) to indicate the status of the Auragen Power Generation System. The normal indicators are defined as follows:

Draft
Further dissemination only as directed by Commandant (CG-937) or higher Coast Guard authority.

Auragen Power Generation System

Indicator	LEDs	Indication
BAT Indicator:	Green	Battery Charge Full
GEN Indicator	Green	Normal
CHG Indicator	Green	Normal
AC Indicator	Green	AC Out On
	Flashing Green	AC Output is starting up (occurs when AC Power Control Switch is placed in the "ON" position)

The control panel indicators are system-active dependent and combine to indicate the Auragen Power Generation System operational status. As system operational status changes or system faults occur, the LED indicators will illuminate/flash in different sequences (see RB-M O-Level Maintenance Manual for further information). Normal modes of operation for the power generation system are:

- Engine Running/AC Power Control Switch OFF: The ECU/ICS is receiving power from the Auragen IPS and providing power to the DC Power Distribution System and charging the batteries.
- Engine Running/AC Power Control Switch ON: The ECU/ICS is receiving power from the Auragen IPS, providing power to the DC Power Distribution System, charging the batteries, and providing power to the AC Power Distribution System.
- Engine Off/AC Power Control Switch OFF: The ECU/ICS is de-energized.
- Engine Off/AC Power Control Switch ON: The ECU/ICS is receiving DC power from the batteries and converting it to AC Power for the AC Power Distribution System.

Once the diesel engine has been started, the Auragen IPS provides power to the ECU/ICS. The ECU/ICS provides DC power for boat operations and to maintain the battery charge. When the AC Power Control Switch is placed in the "ON" position, AC Power is directed to the AC Power Distribution System.

Auragen Drive System

The Auragen IPS is driven by its associated MDE through the Auragen Drive System. The Auragen Drive System (**(Refer to Figure 4)**) consists of:

Draft
Further dissemination only as directed by Commandant (CG-937) or higher Coast Guard authority.

- Drive Shaft
- Shaft Clamp
- Overhung Load Adapter
- Clutch
- Drive Pulley
- Drive Belt
- Belt Tensioner
- Auragen Pulley
- Generator Foundation

The drive shaft (1) input is coupled to the MDE crankshaft through a vibration damper. The drive shaft output is connected to the Overhung Load Adapter (OHLA) (3) with a shaft clamp (2). The OHLA is mounted directly to the generator foundation (4), with its output shaft extending through the foundation. The clutch (5) is mounted through the drive pulley (6) to combine into one rotating unit. The clutch/drive pulley assembly is keyed and secured to the OHLA output shaft. The drive belt (7) is an eight-ribbed poly-v rubber belt that connects the drive and Auragen Pulleys. Both pulleys are grooved to accommodate the drive belt. An automatic drive belt tensioner (8) maintains drive belt tension under all load and MDE speed changes. The Auragen Pulley (9) is connected directly to the Auragen IPS (10). The Auragen IPS is mounted directly to the generator foundation, providing a stable platform for the drive system.

Draft
Further dissemination only as directed by Commandant (CG-937) or higher Coast Guard authority.

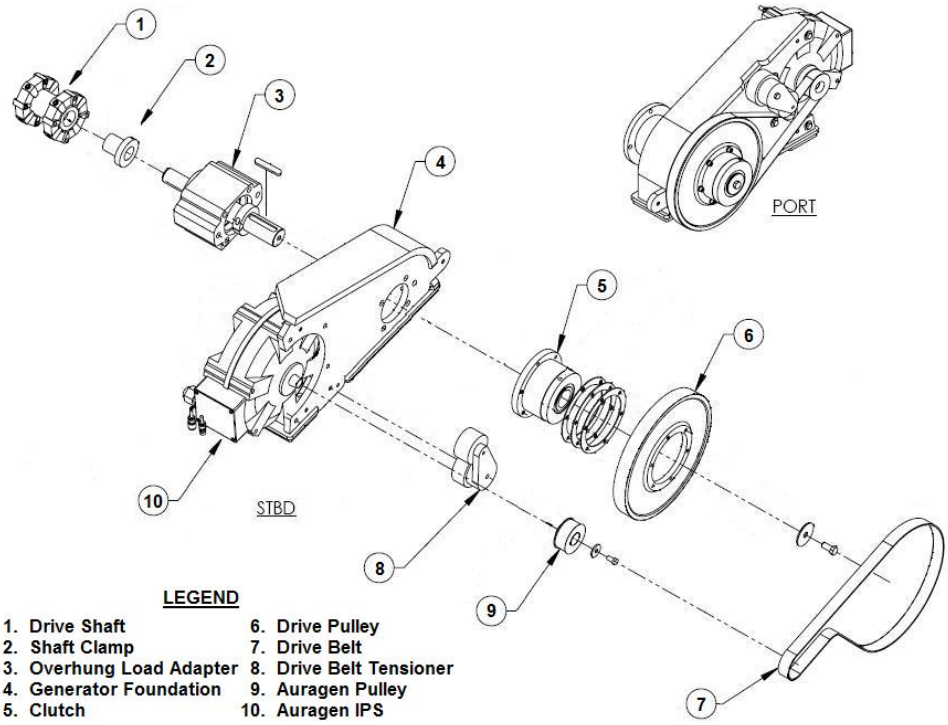

AURAGEN DRIVE SYSTEM

Figure 4

Draft
Further dissemination only as directed by Commandant (CG-937) or higher Coast Guard authority.

Draft
Further dissemination only as directed by Commandant (CG-937) or higher Coast Guard authority.

G.2. Batteries

Batteries

There are two separate battery banks that provide power to the DC Power Distribution System. The Start Battery Bank provides 24-VDC power for diesel engine starting and 24P2 DC Power Panel. The House Battery Bank provides 24-VDC to the 24P1 and 24P3 DC Power Panels. During normal operations, the battery banks operate independent of each other. In the event of an emergency, the battery banks can be cross-connected through manual operation of the Automatic Charging Relay.

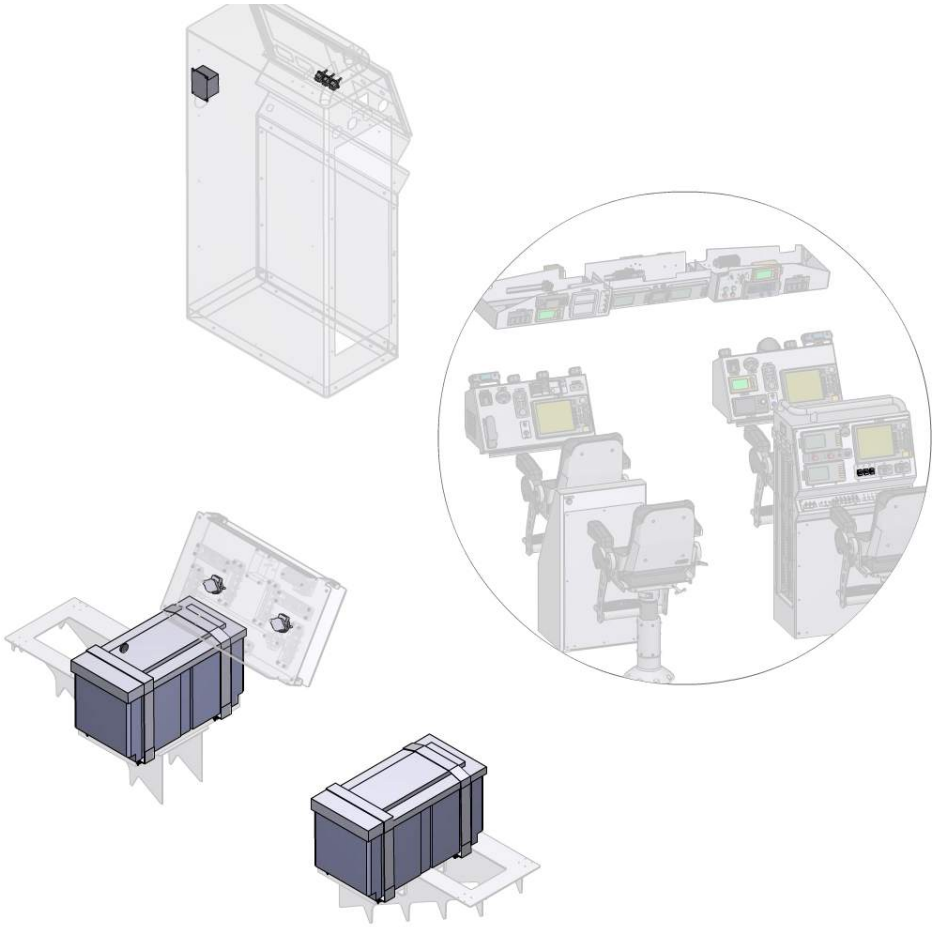

BATTERIES

Figure 1

Draft
Further dissemination only as directed by Commandant (CG-937) or higher Coast Guard authority.

Each battery bank has two 12-VDC Absorptive Glass Mat (AGM) Batteries, connected in series to provide 24-VDC to the DC Power Distribution Bus. The batteries are maintenance-free and designed for high discharge and recharge rates to maximize battery usage and make battery charging more efficient. The batteries receive a charge from:

- Battery Charger, when the RB-M is on Shore Power
- Auragen Power Generation System, when the Diesel Engines are running

The battery banks are located in the Auxiliary Machinery Compartment. An Automatic Charging Relay maintains the battery charge when the diesel engines are running.

Draft
Further dissemination only as directed by Commandant (CG-937) or higher Coast Guard authority.

G.3 Battery Controls

Battery Controls

The Battery Controls are used to control DC Power from the Start and House Battery Banks to the DC Power Distribution System. The Battery Controls consist of:

- Battery Solenoids and Control Switches
- Automatic Power Selector (APS)

The Battery Controls receive 24-VDC from the RB-M Batteries.

Battery Solenoids and Control Switches

The Battery Solenoids and Control Switches are used to provide power to the DC Power Distribution System or isolate the batteries. The solenoids are located in the Auxiliary Machinery Compartment and the control switches are located in the Pilothouse at the Primary Crew Console.

Each battery bank has a battery solenoid and control switch. The control switch is a two-position switch that operates the battery solenoid as follows:

- ON: The solenoid closes, applying power to the DC Power Distribution System.
- OFF: The solenoid opens, isolating the associated battery bank from the DC Power Distribution System.

Each battery solenoid and associated control switch operate independent of the other.

Automatic Power Selector (APS) Unit

The Automatic Power Selector (APS) provides continuous power to the Battery Solenoids, Control Switches, Automatic Charging Relay (ACR), and Remote Switch Panel from redundant power sources. The APS is located in the Auxiliary Machinery Compartment.

The APS receives DC Power from the Start and House Battery Banks as separate inputs. Sensing the battery voltages, the APS directs the higher voltage to the Battery Controls, ACR and Remote Switch Panel to ensure operator’s have control of these critical systems at all times.

Draft
Further dissemination only as directed by Commandant (CG-937) or higher Coast Guard authority.

Draft
Further dissemination only as directed by Commandant (CG-937) or higher Coast Guard authority.

G.4 Battery Chargers

Battery Charging System

The battery charging system is installed to maintain the RB-M battery banks in a ready-state condition when the RB-M is receiving shore power. The system converts AC power to DC power for safe battery charging in stages. The battery charging system consists of:

- Battery charger
- Temperature compensation sensor
- Automatic charging relay
- Remote switch

Draft
Further dissemination only as directed by Commandant (CG-937) or higher Coast Guard authority.

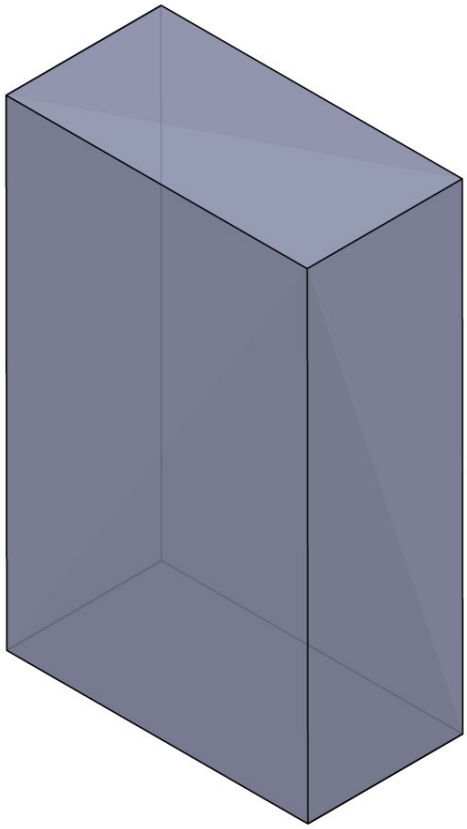

BATTERY CHARGING SYSTEM

Figure 1

The battery charging system receives 240 VAC power from the Shore Power Distribution Panel

Battery Charger

The battery charger is a three-stage smart charger that provides for fast and safe battery charging. The charger is located in the Auxiliary Machinery Compartment on the forward bulkhead starboard of centerline. It uses a three-stage charging cycle, dependent on the condition of the batteries. The three stages are:

Draft
Further dissemination only as directed by Commandant (CG-937) or higher Coast Guard authority.

- Bulk: Active when the batteries are significantly discharged or new. Charging current is maintained at a high level until battery voltage reaches the charge voltage level (batteries are approximately 75-80% capacity).
- Absorption: Battery voltage is maintained at the charge voltage level, while varying amperage, the charge voltage is maintained until the current sensor detects output current is 5-15% of charger rating (Batteries are approximately 95% capacity).
- Float: Batteries are maintained at optimum charge without overcharging and causing damage.

The battery charger will cycle through the different stages when initially energized and as required, depending on battery condition.

The battery charger has an ammeter to monitor charging current to the batteries, an internal cooling fan that operates when a load is applied to the charger, and a time out circuit, which cycles the charger to the float stage after 8-10 hours of operation to prevent battery damage. The time out circuit can be reset by securing power to the battery charger, and then restoring power. The charger also has various protective devices to ensure safe operation:

- Internal AC/DC fuses (non-replaceable)
- Current limiter
- Over-voltage protection
- Automatic load shedding
- Automatic thermal shutdown/recovery

Temperature Compensation Sensor

The temperature compensation sensor provides for an adjusted charge to the batteries based on battery temperature. The sensor provides a temperature signal to the battery charger that fine tunes the charging voltage so it is properly matched to the battery environment.

The temperature compensation sensor is mounted on the house battery bank.

Automatic Charging Relay and Remote Switch

The Automatic Charging Relay (ACR) operates in conjunction with the three position remote switch to maintain battery charge when the generators are providing

Draft
Further dissemination only as directed by Commandant (CG-937) or higher Coast Guard authority.

DC power and to provide an emergency cross connect between the start batteries and the house batteries. The ACR is located in the Auxiliary Machine Compartment and the Remote Switch is located in the pilothouse at the Primary Crew Console.

The ACR is controlled by the Remote Switch. The Remote Switch has a three position switch (On/Auto/Off) and controls the ACR as follows:

- Off: The ACR is de-energized (Open), isolating the start and house battery banks from each other.
- Auto: The ACR closes and opens dependent on start/house battery voltage and the charging voltage provided by the generator.
- On: The ACR closes, cross connecting the start and house battery banks for engine starting and other DC power requirements.

The remote switch has a red led to indicate when the ACR is closed.

Draft
Further dissemination only as directed by Commandant (CG-937) or higher Coast Guard authority.

G.5 DC-DC Converters

The RB-M is equipped with two 24 VDC-12 VDC converters to provide power to various communication/navigation/ancillary equipment to support boat operations. Both converters are located in the Auxiliary Machinery Compartment. The DC-DC converters are rated as follows:

- Input voltage - 20-50 VDC
- Output voltage - 13.6 VDC
- Amperage - 40 amps continuous
- Operating temp - 32 - 122°F
- Input voltage - 20-50 VDC
- Output voltage - 13.6 VDC
- Amperage - 40 amps continuous
- Operating temp - 32 - 122°F

Draft
Further dissemination only as directed by Commandant (CG-937) or higher Coast Guard authority.

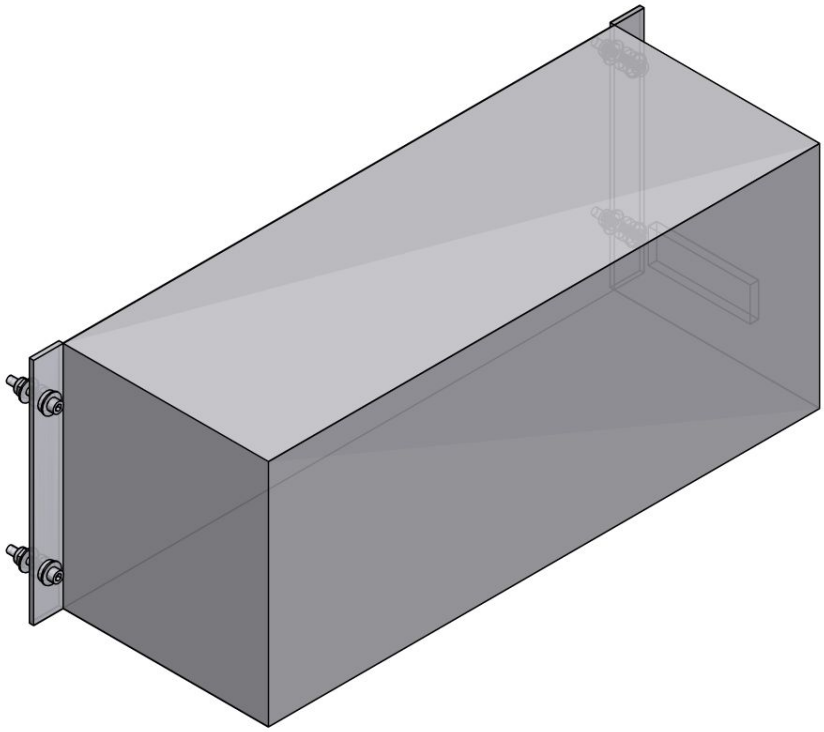

24/12 VDC CONVERTER

Figure 1

The DC-DC Converters have numerous load protection circuits to prevent unsafe operation and protect equipment and personnel:

- Current limiting
- Short circuit
- Reverse polarity
- Over-voltage/protection
- Current limiting
- Short circuit

Draft
Further dissemination only as directed by Commandant (CG-937) or higher Coast Guard authority.

- Reverse polarity
- Over-voltage/protection

The converter is designed with large heat sink fins to reduce internal heat generated by internal components. These large/heat sink fins maximize air contact for cool converter operation and extend the life of internal components in the event the converter does overheat:

- Output will drop linearly from 100% at 104°F to 50% at 122°F
- Thermal shutdown of the converter occurs at 158°F case temperature
- Output will drop linearly from 100% at 104°F to 50% at 122°F
- Thermal shutdown of the converter occurs at 158°F case temperature

The DC-DC converters receive 24-VDC power from the 24P1 Distribution Panel and distributes to the 12P1 Power Distribution Panel.

Draft
Further dissemination only as directed by Commandant (CG-937) or higher Coast Guard authority.

Draft
Further dissemination only as directed by Commandant (CG-937) or higher Coast Guard authority.

G.6. 120/240 VAC Power Distribution Panel

120/240 VAC Power Distribution Panel

The 120/240 VAC Power Distribution Panel is located in the Pilothouse. The panel, 240P1, provides the interface between the Auragen Power Generation System/Shore Power and the AC-powered equipment. The 240P1 Panel has the following:

- Feeder Circuit Breakers.
- Bus Transfer Switches.
- Monitoring Devices.

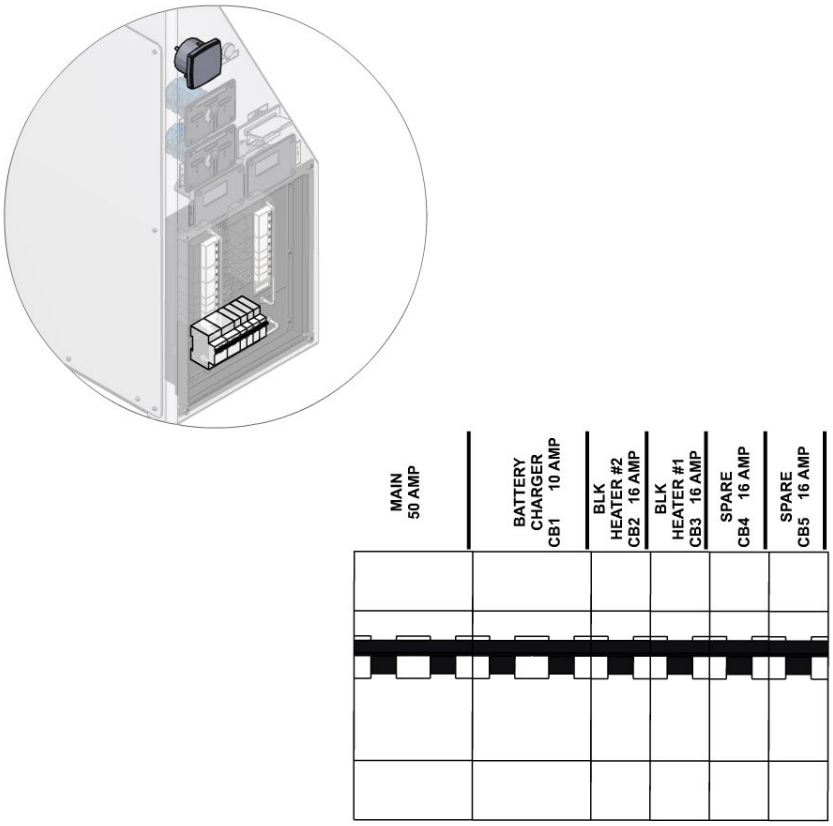

120/240 VAC POWER PANEL

Figure 1

Draft
Further dissemination only as directed by Commandant (CG-937) or higher Coast Guard authority.

Feeder Circuit Breakers

The 240P1 Panel receives power from the Auragen Power Generation System and Shore Power. Each power source has its own feeder circuit breaker to provide connectivity and circuit protection. Each Auragen System has a 50-amp, three-pole circuit breaker. Shore Power is received through a 50-amp, two-pole circuit breaker.

Bus Transfer Switch

The 240P1 Panel has two separate bus transfer switches for power source selection. The Bus Transfer Switch is a manually operated, three-position switch that provides the following selections:

- Generator: selects power from the Auragen Power Generation System.
- Off: no power source is selected.
- Shore: selects power from Shore Power.

Each Bus Transfer Switch controls AC Power to a dedicated load bus within the power panel. This setup ensures electrical power to one of the load busses in the event of an Auragen System/diesel engine failure.

- Bus Transfer Switch One controls power to Bus-1.
- Bus Transfer Switch Two controls power to Bus-2.

NOTE

AC Power CANNOT be cross-connected between the two load busses in the 240P1 Power Panel.

Monitoring Devices

The 240P1 Power Panel has three monitoring devices that provide a status of the AC Power Distribution System.

- Power Available Indicator: illuminates when power is available from the Auragen Power Generation System or Shore Power. Each power source has its own indicator.
- Bus Multimeter: provides monitoring of AC Power on the individual load busses. Each bus has its own multimeter.

Draft
Further dissemination only as directed by Commandant (CG-937) or higher Coast Guard authority.

- Ground Fault Detection: provides for ground testing of both busses. When the test button is depressed, the Ground Fault Meter will indicate if a ground exists in the AC Power Distribution System.

All three monitoring devices function when the Auragen Power Generation System or Shore Power is providing AC Power.

AC Powered Equipment

The following equipment is served by the 240P1 Power Panel:

Bus 1 (STBD Auragen)	Bus 2 (Port Auragen)
PLTHS HVAC Unit	Survivor Cabin HVAC Unit
Microwave Oven	PLTHS Heater
Survivor Cabin Heater	Window Trace Heaters
Electrical Outlets (PLTHS, ER)	

Draft
Further dissemination only as directed by Commandant (CG-937) or higher Coast Guard authority.

Draft
Further dissemination only as directed by Commandant (CG-937) or higher Coast Guard authority.

G.7. 120 VAC Shore Power Panel

Shore Power

When the RB-M is in port, power can be received to operate the various AC Power system/equipment. The Shore Power System consist of the following:

- Shore Power Inlet Receptacle.
- Main Shore Power Disconnect Circuit Breaker.
- Shore Power Isolation Transformer.
- Shore Power Bus.

The Shore Power System receives 120 VAC, 60Hz, single phase power from the inport pier connection.

Shore Power Inlet Receptacle

Shore Power from the pier connection enters the RB-M through a cable connected to the Shore Power Inlet Receptacle. The Shore Power Inlet Receptacle is rated at 120 VAC 100-amps and is located in the Port Rescue Recess.

Main Shore Disconnect Circuit Breaker

The Shore Power System has a Main Shore Disconnect Breaker that provides the connection of power between the Shore Power Inlet Receptacle and the Shore Power Transformer, and provides circuit protection in the event of an overload or system fault. The Disconnect Circuit Breaker is a 120 VAC, two-pole breaker rated at 100 amps and is located in the Auxiliary Machinery Compartment.

Shore Power Isolation Transformer

The Shore Power Isolation Transformer receives the 120 VAC 60 Hz Power input and steps it up to 240 VAC 60 Hz for the AC Power Distribution System.

Shore Power Bus

The Shore Power Bus provides power to equipment necessary to maintain specific equipment/systems during inport periods. The 240P2 Shore Power Bus is located in the AC Power Distribution Panel in the Pilothouse.

The Shore Power Bus serves the following equipment:

- Battery Charger

Draft
Further dissemination only as directed by Commandant (CG-937) or higher Coast Guard authority.

- Kim Hotstart Engine Heaters

Shore Power is also provided to the 240P1 AC Power Busses through the Bus Transfer Switches when the “Shore” position is selected.

NOTE

The 240P2 Shore Power Bus can only be energized when Shore Power is available. AC Power from the Auragen Power Generation System CANNOT be connected to any Shore Power Bus loads.

Draft
Further dissemination only as directed by Commandant (CG-937) or higher Coast Guard authority.

G.8. 24-VDC Distribution Panels

24-VDC Distribution Panels

There is a 24-VDC Power Distribution Panel located on the inboard side of the Primary Crew Console in the Pilothouse. The panel provides power distribution and circuit protection for shipboard electrical and electronic equipment. The panel has three separate DC power busses for proper load distribution and survivability to meet mission requirements. The three DC power busses and power sources are:

- 24P1 24VDC Vital Bus – receives power from the House DC Power Bus.
- 24P2 24VDC Engine Bus – receives power from the Start DC Power Bus.
- 24P3 24VDC Non-Vital Bus – receives power from the House DC Power Bus.

Draft
Further dissemination only as directed by Commandant (CG-937) or higher Coast Guard authority.

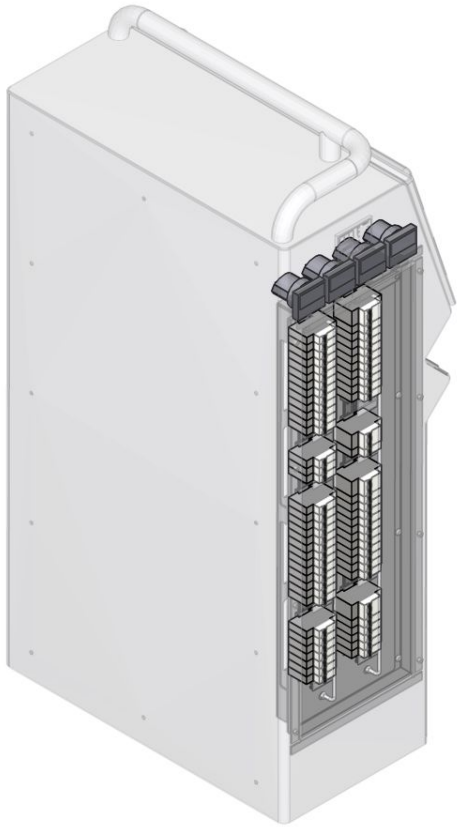

24-VDC POWER PANEL

Figure 1

The following equipments are served by each distribution panel:

Equipment and Distribution Panels

Equipment	Panel
24P1	Engine Panel (Secondary)
	Radar/Chart Plotter (Nav)
	Vector Alarm PLC
	Bilge Pump Panel
	Navigation Lights
	Wiper/Washer System
	DGPS

Draft
Further dissemination only as directed by Commandant (CG-937) or higher Coast Guard authority.

	Crew Communications
	Depth Sounder System
	24/12 VDC Converter #1
	24/12 VDC Converter #2
	Air Compressor and Horn
	Pilothouse Lighting
	Survivors' Compartment Lighting
	Hull Compartment Lighting
	Engine Room Lighting
	Lazarette Lighting
24P2	Engineroom Ventilation Fans
	Engine Panel (Primary)
	Waterjet Controls
24P3	Automatic Identification System
	Floodlights
	Pilothouse/Auxiliary Machinery Compartment Ventilation
	Low Level Lights
	Law Enforcement Lights
	Instrument Lighting
	Search Light
	Pilothouse/Head Ventilation Fans
	Condensate Pump
	STBD Fwd Window Defroster
	STBD Mid Window Defroster
	STBD Aft Window Defroster
	PORT Fwd Window Defroster
	PORT Mid Window Defroster
	PORT Aft Window Defroster
	Radar/Chart Plotter (Nav)
	HF SSB Radio
	Chart Plotter (Crew)
	Chart Plotter (Helm)
	Autopilot
	Secure Communication System

Draft
Further dissemination only as directed by Commandant (CG-937) or higher Coast Guard authority.

Each bus receives 24-VDC through a 100-Amp Double Pole Circuit Breaker. DC Power for each bus is monitored at the top of the distribution panel with a Digital Voltmeter.

Draft
Further dissemination only as directed by Commandant (CG-937) or higher Coast Guard authority.

G.9. 12-VDC Distribution Panels

12-VDC Distribution Panel

There is a 12-VDC Distribution Bus located in the 24-VDC Distribution Panel on the inboard side of the Primary Crew Console in the Pilothouse. The 12P1 DC Distribution Bus provides power distribution and circuit protection for shipboard electrical and electronic equipment. The bus receives power from two 24/12 VDC Converters powered from the 24P1 Vital Bus.

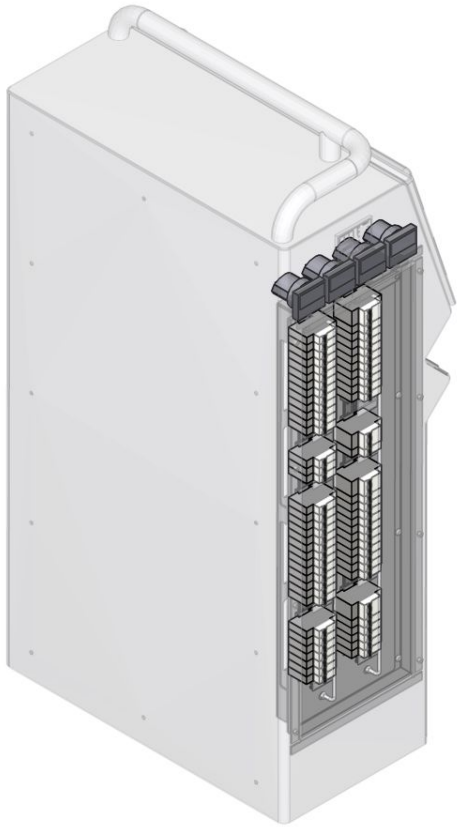

12 VDC POWER PANEL

Figure 1

The following equipment is served by the 12P1 distribution panel:

Draft
Further dissemination only as directed by Commandant (CG-937) or higher Coast Guard authority.

- Loudhailer
- Ethernet Hub
- VHF Communications
- VHF DSC Radiophone
- UHF Communications
- CCTV
- Fuel Gauge
- Auxiliary Power Outlets
- Toilet Pump
- Radio Direction Finder

The bus receives 12-VDC through a 100-Amp Double Pole Circuit Breaker. DC Power for the bus is monitored at the top of the distribution panel with a Digital Voltmeter.

Draft
Further dissemination only as directed by Commandant (CG-937) or higher Coast Guard authority.

H. Fire Extinguishing Agents

Introduction

The RB-M is outfitted with two fire extinguishing systems to combat various classes of fires. The fire extinguishing systems include the following:

- Fixed Fire Extinguishing System.
- Portable Fire Extinguishers.

Each system is designed to extinguish fires and protect the crew.

Draft
Further dissemination only as directed by Commandant (CG-937) or higher Coast Guard authority.

Draft
Further dissemination only as directed by Commandant (CG-937) or higher Coast Guard authority.

H.1. Fixed Fire Extinguishing System

Fixed Fire Extinguishing System

The FM-200 Fixed Fire Extinguishing System (**(Refer to Figure 1)**) is used for fire suppression in the engine room. All personnel should be evacuated from the compartment and all watertight hatches sealed prior to activation of the system. Refer to the “Fire in the Engine Room” casualty control section in this manual for detailed procedures on system use.

The FM-200 Fire Extinguishing System consists of the following components:

- Nitrogen Pilot Cylinder.
- Pressure Switch.
- Pressure Trips (3).
- Nitrogen Time Delay Cylinder with lever operated head.
- 40-lb FM-200 Agent Cylinder with a lever/pressure operated head.
- Discharge Nozzle.

WARNING

Failure to evacuate the engine room within 30 seconds of activation of the 30 second Nitrogen Time Delay Cylinder can result in serious injury or death!

Draft
Further dissemination only as directed by Commandant (CG-937) or higher Coast Guard authority.

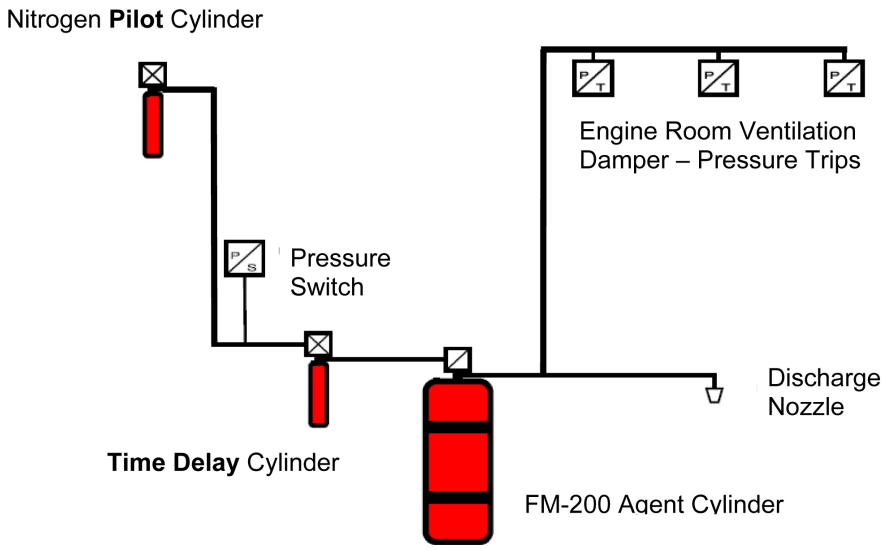

FIXED FIRE EXTINGUISHING SYSTEM

Figure 1

FM-200 Cylinder

The FM-200 Cylinder is located in the Auxiliary Machinery Compartment and contains the FM-200 Fire Suppression Agent. The cylinder is supercharged with approximately 30 lbs. of agent and nitrogen as the expellant. The cylinder is fitted with a Lever/Pressure Operated Control Head.

Activation Stations

There are three different activation stations for the FM-200 Fixed Fire Extinguishing System. The activations stations are located at the:

- Nitrogen Cylinder in the Pilothouse.
- Nitrogen Time Delay Cylinder in the Auxiliary Machinery Compartment.
- FM-200 Cylinder in the Auxiliary Machinery Compartment.

The system is normally activated by removing the locking pin on the Nitrogen Pilot Cylinder Lever Control Head and pulling up on the lever. This releases the nitrogen into the discharge manifold. The system can also be activated from the Nitrogen Time Delay Cylinder or the FM-200 Cylinder.

System Flow

Draft
Further dissemination only as directed by Commandant (CG-937) or higher Coast Guard authority.

1. Cycle the Pressure Switch to:
   - Stop the diesel engines.
   - Stop the engine room exhaust fans.
   - Activate the audible/visual alarms.
2. Actuate the three Damper Control Actuators to close:
   - Engine Room Inlet Damper.
   - Engine Room Port Exhaust Damper.
   - Engine Room Starboard Exhaust Damper.

   When the pressure trips actuate, the dampers close, isolating the engine room.
3. Activate the 30-second Nitrogen Time Delay Cylinder. The 30-second delay provides for:
   - Space Evacuation.
   - Isolation of engine room from the Pilothouse.
   - Securing of engine room access hatch.
   - Coastdown of engine room exhaust fans.
4. Once the time delay has expired, nitrogen activates the FM-200 Cylinder, releasing the fire extinguishing agent into the space through the discharge nozzle. The agent will be completely discharged in approximately 10 seconds.

Draft
Further dissemination only as directed by Commandant (CG-937) or higher Coast Guard authority.

Draft
Further dissemination only as directed by Commandant (CG-937) or higher Coast Guard authority.

H.1.1. Fixed Fire Extinguishing System - Nitrogen Pilot Cylinder

Nitrogen Pilot Cylinder	The Nitrogen Pilot Cylinder is located in the Pilothouse behind the coxswain's seat on the forward face of the engineer's console. The pilot cylinder has a Lever Operated Control Head with a locking pin. The lever is manually activated by the crew. Refer to **(Refer to Figure 1)** .

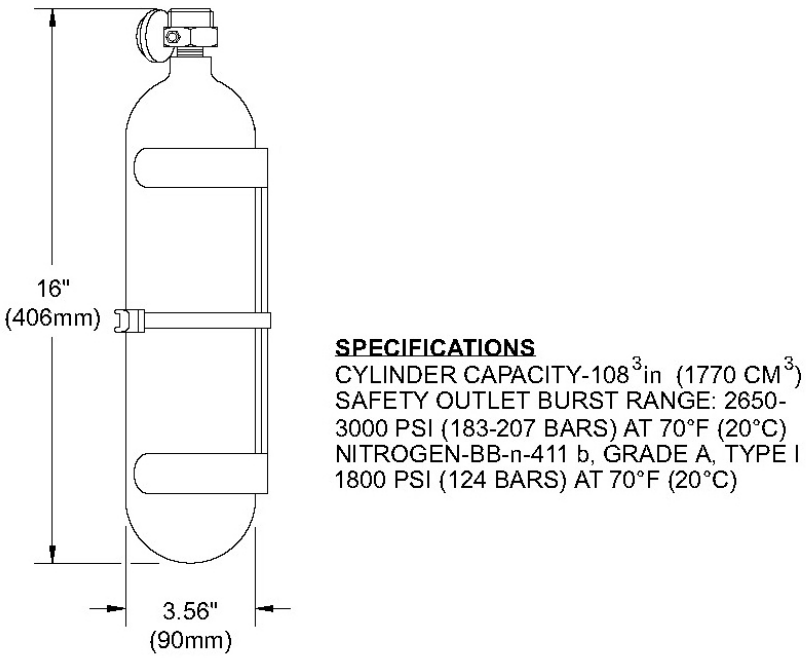

NITROGEN PILOT CYLINDER

Figure 1

Draft
Further dissemination only as directed by Commandant (CG-937) or higher Coast Guard authority.

Draft
Further dissemination only as directed by Commandant (CG-937) or higher Coast Guard authority.

H.1.2. Fixed Fire Extinguishing System - Pressure Switch

Pressure Switch

The Pressure Switch is a three-position, double-throw switch that is located in the Auxiliary Machinery Compartment. The switch can be automatically activated by nitrogen from the Nitrogen Pilot Cylinder, or manually at the switch. When the switch is activated, the following occurs:

- Both diesel engines shut down.
- Both engine room exhaust fans shut down.

The Pressure Switch is manually reset by depressing the stem on top of the switch.

The Pressure Switch receives 24-VDC input.

PRESSURE SWITCH

Figure 1

Draft
Further dissemination only as directed by Commandant (CG-937) or higher Coast Guard authority.

Draft
Further dissemination only as directed by Commandant (CG-937) or higher Coast Guard authority.

H.1.3. Fixed Fire Extinguishing System - Damper Control Valve

Damper Control Valve

There are three Damper Control Valves in the FM-200 Fire Extinguishing System. The Damper Control Valves are mounted on the Engine Room Supply Damper, Engine Room Port Exhaust Damper, and Engine Room Starboard Exhaust Damper to isolate air to the Engine Room. The Damper Control Valve (, 1) holds the ventilation damper open with the Damper Cam Assembly (2). The Damper Control Valve can be actuated in two ways:

- Automatic: The Damper Control Valves are automatically actuated with nitrogen from the pilot cylinder in the Fixed Fire Extinguishing System. When nitrogen enters each valve, the plungers retract into the valve body and release the Damper Cam Assemblies, closing the ventilation dampers.
- Manual: The Damper Control Valve is manually actuated with the pull ring (3) on the valve. When the ring is pulled, the plunger retracts into the valve body and releases the Damper Cam Assembly, closing the ventilation damper.

Each ventilation damper must be manually opened to reset the Damper Control Valve.

Draft
Further dissemination only as directed by Commandant (CG-937) or higher Coast Guard authority.

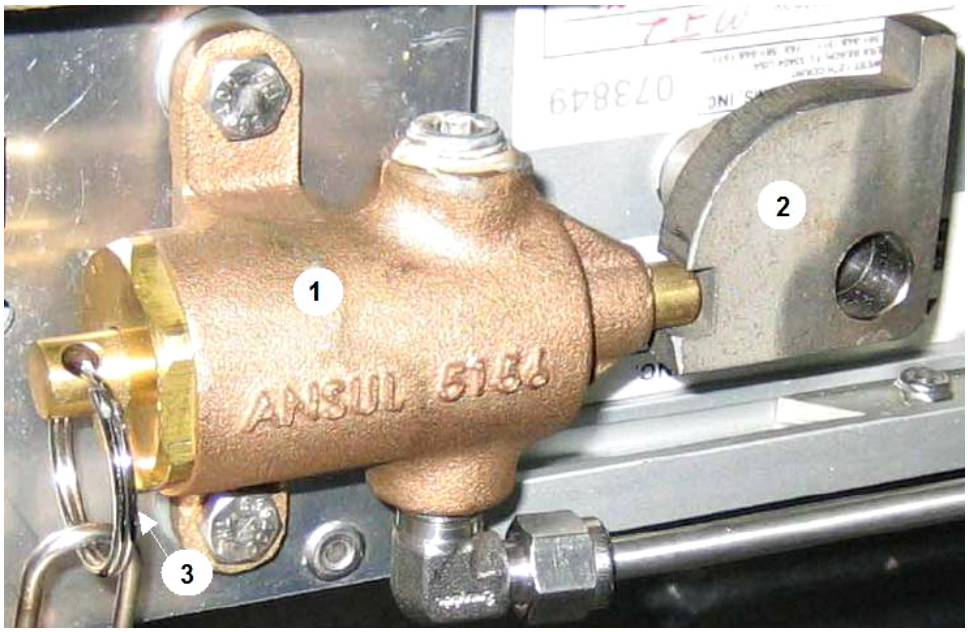

DAMPER CONTROL VALVE

Figure 1

Draft
Further dissemination only as directed by Commandant (CG-937) or higher Coast Guard authority.

H.1.4. Fixed Fire Extinguishing System - Nitrogen Time Delay Cylinder

Nitrogen Time Delay Cylinder

The Nitrogen Time Delay Cylinder is located in the Auxiliary Machinery Compartment on the port side at Frame 10. This cylinder is activated automatically when the Nitrogen Pilot Cylinder is activated and provides a 30-second time delay before the FM-200 Fire Extinguishing System is activated. The 30-second delay allows for the following:

- Evacuation of the engine room.
- Securing of equipment from the pilothouse.
- Closing of engine room access hatch.
- Engine room exhaust fans to stop turning.

Draft
Further dissemination only as directed by Commandant (CG-937) or higher Coast Guard authority.

Draft
Further dissemination only as directed by Commandant (CG-937) or higher Coast Guard authority.

H.1.5.Fixed Fire Extinguishing System - FM-200 Agent Cylinder

FM-200 Agent Cylinder

The FM-200 Agent Cylinder is located in the Auxiliary Machinery Space and contains the FM-200 Fire Suppression Agent. The cylinder is supercharged with approximately 30 lbs. of agent and nitrogen as the expellant. The cylinder is fitted with a Lever / Pressure Operated Control Head. Fire suppression agent is released automatically with nitrogen pressure from the time delay cylinder. The agent can also be released manually using the lever on the cylinder control head. Refer to **(Refer to Figure 1)** .

Draft
Further dissemination only as directed by Commandant (CG-937) or higher Coast Guard authority.

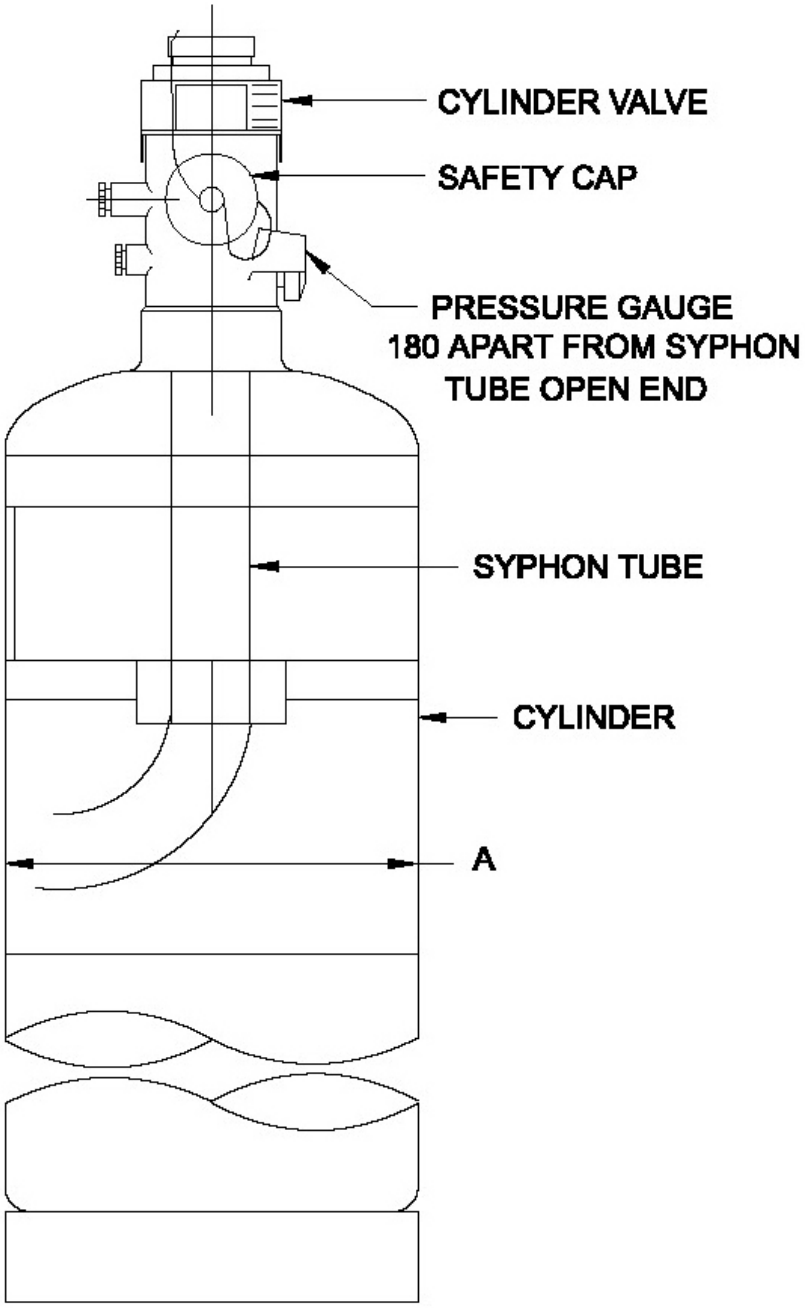

FM-200 AGENT CYLINDER

Figure 1

Draft
Further dissemination only as directed by Commandant (CG-937) or higher Coast Guard authority.

Draft
Further dissemination only as directed by Commandant (CG-937) or higher Coast Guard authority.

Draft
Further dissemination only as directed by Commandant (CG-937) or higher Coast Guard authority.

H.1.6. Fixed Fire Extinguishing System - Lever Operated Control Head

Lever Operated Control Head

The Lever Operated Control Head is connected to the cylinder valve of the Nitrogen Pilot Cylinder and the Nitrogen Time Delay Cylinder. The lever is normally in the closed (down) position, with the locking pin installed to prevent inadvertent activation of the bottle and a lead wire seal in place to indicate if the lever has been tampered with.

In the closed position, the stem is withdrawn up in the body of the control head. When the lever is lifted to the open position, the stem moves down, actuating the cylinder valve and releasing the nitrogen from the cylinder.

Draft
Further dissemination only as directed by Commandant (CG-937) or higher Coast Guard authority.

Draft
Further dissemination only as directed by Commandant (CG-937) or higher Coast Guard authority.

H.1.7. Fixed Fire Extinguishing System - Lever/Pressure Operated Control Head

Lever/ Pressure Operated Control Head

The Lever/Pressure Operated Control Head is connected to the cylinder valve of the FM-200 Agent Cylinder. The lever is normally in the closed (down) position, with the locking pin installed to prevent inadvertent activation of the bottle and a lead wire seal in place to indicate if the lever has been tampered with. The Lever/Pressure Operated Control Head can be operated automatically via pressure or manually.

Automatic operation occurs when nitrogen enters the valve body through the pressure inlet from the Nitrogen Time Delay Cylinder. Nitrogen pressure compresses the piston, pushing down the stem and puncturing the disk in the cylinder valve, releasing the FM-200 Agent.

Manual operation The Lever/Pressure Operated Control Head can be operated In the closed position, the stem is withdrawn up in the body of the control head. When the lever is lifted to the open position, the stem moves down, actuating the cylinder valve and releasing the FM-200 agent.

Draft
Further dissemination only as directed by Commandant (CG-937) or higher Coast Guard authority.

Draft
Further dissemination only as directed by Commandant (CG-937) or higher Coast Guard authority.

H.2. Portable Fire Extinguisher

The RB-M is outfitted with four (4) 5-lb portable dry chemical fire extinguishers. The fire extinguishers are mounted on a heavy duty bracket in the following locations:

- Pilothouse (2).
- Survivor's Cabin (2).
- Pilothouse (2).
- Survivor's Cabin (2).

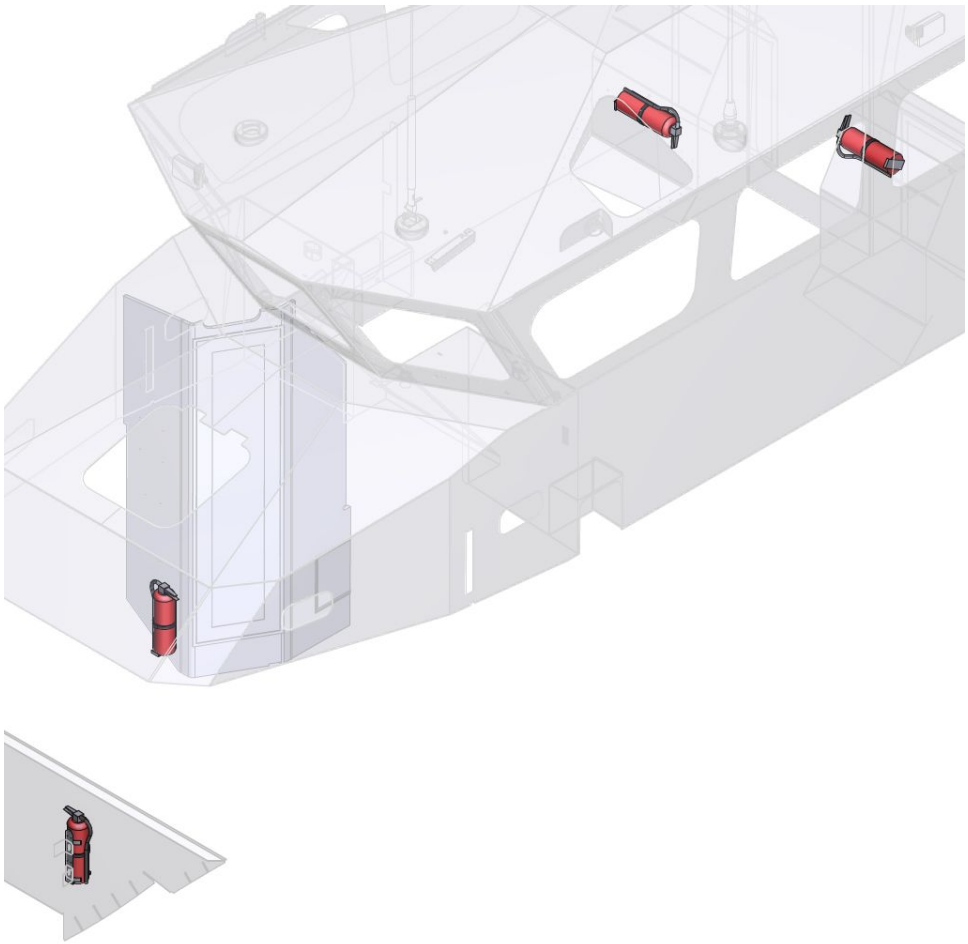

PORTABLE FIRE EXTINGUISHERS

Figure 1

Draft
Further dissemination only as directed by Commandant (CG-937) or higher Coast Guard authority.

The Pilothouse extinguishers are secured to the bulkhead behind the Primary Crew and Crew Seats. In the Survivors' Compartment, one extinguisher is secured to the forward compartment bulkhead and the other is secured to the head partition next to the starboard folding seats.

These portable dry chemical fire extinguishers are designed to be used on Class "A", "B", and "C" fires. The dry chemical agent used is Monoammonium Phosphate, with nitrogen as the expellant. The extinguisher is charged to 195 psig and has the following characteristics:

- Discharge Range: 18 feet.
- Discharge Time: 13-15 seconds.
- Heavy duty flexible discharge hose.
- Pressure gauge (Overcharged, Normal, Recharge).
- Discharge Range: 18 feet.
- Discharge Time: 13-15 seconds.
- Heavy duty flexible discharge hose.
- Pressure gauge (Overcharged, Normal, Recharge).

Draft
Further dissemination only as directed by Commandant (CG-937) or higher Coast Guard authority.

I. Damage Control Systems/Equipment

Introduction

The RB-M has installed damage control systems to provide for dewatering of spaces or the supply of firefighting water through the use of the P-6 Pump. These systems are:

- Fire/Bilge Standpipe.
- Electric Bilge Pump System.

Draft
Further dissemination only as directed by Commandant (CG-937) or higher Coast Guard authority.

Draft
Further dissemination only as directed by Commandant (CG-937) or higher Coast Guard authority.

I.1. Fire/Bilge Standpipe

Firefighting and Dewatering Standpipes

The RB-M is equipped with individual firefighting and dewatering standpipes. Each standpipe is 2.5-inch diameter aluminum alloy and is fitted with male cam-lock adapters. The standpipes also have dust caps to prevent debris from getting into the pipe when not in use.

Firefighting Standpipe (Bottom Connection)

The Firefighting Standpipe is used in conjunction with the P-6 Firefighting/ Dewatering Pump to provide water for fighting fires. The standpipe originates at the seachest located in the Lazarette and terminates at the main deck on the port side of the Lazarette Trunk.

Dewatering Standpipe (Top Connection)

The Dewatering Standpipe is used in conjunction with the P-6 Firefighting/ Dewatering Pump for dewatering the Engine Room. The standpipe originates in the Engine Room bilge and has a suction strainer to prevent clogging of the standpipe when in use. The standpipe terminates at the main deck on the port side of the Lazarette Trunk.

Draft
Further dissemination only as directed by Commandant (CG-937) or higher Coast Guard authority.

Draft
Further dissemination only as directed by Commandant (CG-937) or higher Coast Guard authority.

I.2. Electric Bilge Pump System

Electric Bilge Pump System

The Electric Bilge Pump System consists of six installed submersible bilge pumps for the purpose of dewatering spaces, as required. Each installed bilge pump and associated equipment is segregated from the other bilge pumps. There is no ability to cross-connect with another bilge pump to facilitate dewatering of a space. The Electric Bilge Pump System consist of:

- Submersible Bilge Pumps.
- Discharge Hoses.
- Check Valves.
- Alarm Switches.
- Bilge Alarm Float Switch.

The Electric Bilge Pump System is monitored and controlled from the Pilothouse.

Draft
Further dissemination only as directed by Commandant (CG-937) or higher Coast Guard authority.

ELECTRIC BILGE PUMP SYSTEM

Figure 1

Electric Bilge Pump

Each bilge space has a fixed, submersible bilge pump that operates on 24-VDC. The bilge pumps are rated at 2000 GPH (33 GPM). The bilge pumps are located in the following spaces:

- Forepeak.
- Survivors' Compartment.
- Auxiliary Machinery Compartment (Port).

Draft
Further dissemination only as directed by Commandant (CG-937) or higher Coast Guard authority.

- Auxiliary Machinery Compartment (Starboard).
- Engine Room.
- Lazarette.

Each bilge pump discharges through a 1-inch neoprene hose that connects to an overboard discharge check valve, which is hard-piped to the hull above the waterline. The check valve prevents backflow through the pump and into the space. The bilge pumps discharge overboard at:

- Forepeak, starboard side, just forward of WTB 14.
- Survivors' Compartment, port side, forward of frame 11.
- Auxiliary Machinery Compartment (Port), port side, forward of WTB 7 at Rescue Recess.
- Auxiliary Machinery Compartment (Stbd), starboard side, forward of WTB 7 at Rescue Recess.
- Engine Room, starboard side, forward of WTB 2 at frame 2B.
- Lazarette, starboard of mid-ships, directly aft.

The Electric Bilge Pumps receive 24-VDC when the pumps are activated from the Bilge Pump Control Panel on the Primary Crew Console in the Pilothouse.

Bilge Alarm Float Switch

The Bilge Alarm Float Switch is an alarm-only float switch and is separate from the bilge pump. The float rises with the fluid level in the space, sending a signal to the integrated alarm system when the float switch contacts close. When the float switch contacts close, the following occurs:

- Activates the audible and visual alarm in the Pilothouse.
- Activates the alarm page on the Vector Control/Display Alarm Panel.
- Activates the law enforcement light and the mast horn (only when the External Alarm Relay Arming Switch is active).

The Bilge Alarm Float Switch receives 24-VDC from the Central Alarm System.

Bilge Pump Controls and Indicators

Draft
Further dissemination only as directed by Commandant (CG-937) or higher Coast Guard authority.

The Bilge Pump Controls and Indicators are located in the Pilothouse at the Primary Crew Console. Each pump has a “ON/OFF” toggle switch and a red “Pump Run” Indicator.

The Bilge Pump Controls and Indicators receive 24-VDC from the 24P1 Distribution Panel.

Draft
Further dissemination only as directed by Commandant (CG-937) or higher Coast Guard authority.

J. HVAC Systems

Introduction

The HVAC system heats, cools and ventilates the compartments on the RB-M. The system consists of:

- Machinery Space Ventilation.
- Non-Machinery Space Ventilation.
- Air Conditioning Systems
- HVAC Cooling Water System.
- Electric Heating
- Window Defrosters.

Draft
Further dissemination only as directed by Commandant (CG-937) or higher Coast Guard authority.

Draft
Further dissemination only as directed by Commandant (CG-937) or higher Coast Guard authority.

J.1. Machinery Space Ventilation

Machinery Space Ventilation

Machinery Space Ventilation uses forced air through fans to replenish air in the Engine Room and Auxiliary Machinery Compartment. Machinery Space Ventilation consists of the following components:

- Engine Room Demisters (2)
- Engine Room Supply Damper.
- Engine Room Exhaust Fans (2).
- Engine Room Exhaust Dampers (2).
- Auxiliary Machinery Compartment Vent Valve.
- Auxiliary Machinery Compartment Exhaust Fan.

Engine Room Demisters

There are two Engine Room Demisters that are located on the external aft bulkhead of the Pilothouse on either side of the Pilothouse Door. The demisters provide the initial air flow path for air in the Engine Room. The demisters keep water and large particulate matter from entering the Engine Room Ventilation System.

Engine Room Supply Damper

The Engine Room Supply Damper allows air to flow into the Engine Room. The damper has a damper control valve that is connected to the Fixed Fire Extinguishing System. When the Nitrogen Pilot Cylinder is activated, the supply damper will close, isolating air to the space.

Engine Room Exhaust Fans

There are two Engine Room Exhaust Fans mounted to associated exhaust dampers on port and starboard sides of the aft bulkhead in the Engine Room. The exhaust fans draw air into the space through the demisters and supply damper. Air is then moved through the exhaust dampers and out through the louvers on the sides of the Lazarette Trunk. The exhaust fans are rated at 1784 cfm air flow.

The exhaust fans receive 24-VDC from the 24P2 DC Distribution Panel and are controlled by a AUTO/MAN switch on the Primary Crew Console.

Engine Room Exhaust Dampers

Draft
Further dissemination only as directed by Commandant (CG-937) or higher Coast Guard authority.

Each Engine Room Exhaust Fan as an associated exhaust damper. The exhaust dampers are mounted on the aft bulkhead of the Engine Room. Each damper has a damper control valve that is connected to the Fixed Fire Extinguishing System. When the Nitrogen Pilot Cylinder is activated, the exhaust dampers will close, isolating air to the space.

Auxiliary Machinery Compartment Vent Valve

The Auxiliary Machinery Compartment Vent Valve is an inverted ball check valve that provides supply ventilation to the space.

The AMC Vent Valve is located between Frames 8 and 9 external of the Pilothouse on the port side.

Auxiliary Machinery Compartment Exhaust Fan

The AMC Exhaust Fan is a single wheel centrifugal fan located on the starboard side of the space in the overhead. The fan is rated at 24-VDC and 210 cfm air flow. The fan draws air into the space through the vent valve and discharges it into the Engine Room Supply Ventilation between the demisters and the supply damper.

The AMC Exhaust Fan receives 24-VDC from the 24P3 DC Distribution Panel.

Draft
Further dissemination only as directed by Commandant (CG-937) or higher Coast Guard authority.

J.2. Non-Machinery Space Ventilation

Non-Machinery Space Ventilation

Non-Machinery Space Ventilation applies to the Forepeak, Lazarette, Survivors' Compartment and Pilothouse. This ventilation consists of the following:

- Natural Ventilation
- Forced Ventilation

Natural Ventilation

The Forepeak and Lazarette are ventilated through four vent valves (two per compartment). The vent valves are inverted ball check valves that allow for the natural flow of air through the compartments. The check valves also prevent flooding of the compartments in the event the boat capsizes.

Forced Ventilation

The Pilothouse and Head have an installed single wheel centrifugal fan rated at 24-VDC at 150 cfm air flow. These fans work together to provide air flow through the Survivors' Compartment, Pilothouse and Head. The Pilothouse Fan is located on the aft bulkhead of the Survivors' Compartment and the Head Fan is located in the overhead. The Pilothouse and Head Fans are controlled by a single switch located on the Primary Crew Console.

The Pilothouse also has four Hella Fans mounted in the overhead near the crew seating. Each fan has a control switch on the fan and can be positioned as required by the crewmember.

The Pilothouse, Head and Hella Fans receive 24-VDC from the 24P3 DC Distribution Panel.

Forced Air Flow

Air is drawn in from the starboard side of the RB-M through a vent duct and blast gate into the Survivors' Compartment. Air circulates through the Survivors' Compartment as it is drawn into the Pilothouse Fan. The Pilothouse Fan discharges the air into and circulates it through the Pilothouse. The Head Fan draws air from the Pilothouse into the Survivors' Compartment through the Survivors' Compartment Doors and under the door to the head. Air from the Head Fan exits the boat through a blast gate and ventilation duct on the port side of the RB-M.

Draft
Further dissemination only as directed by Commandant (CG-937) or higher Coast Guard authority.

Draft
Further dissemination only as directed by Commandant (CG-937) or higher Coast Guard authority.

J.3. Air Conditioning Systems

Electric Heating

The Pilothouse and Survivor's Compartment are outfitted with electric heaters to warm the spaces as required. The two types of electric heaters are:

- 1500W Electric Standalone Heater
- 3000W Duct Heater

Each space has one of each heater. The heaters operate independently of each other.

CAUTION !

Avoid blocking heaters with bags or survival gear. This could become a fire hazard.

Draft
Further dissemination only as directed by Commandant (CG-937) or higher Coast Guard authority.

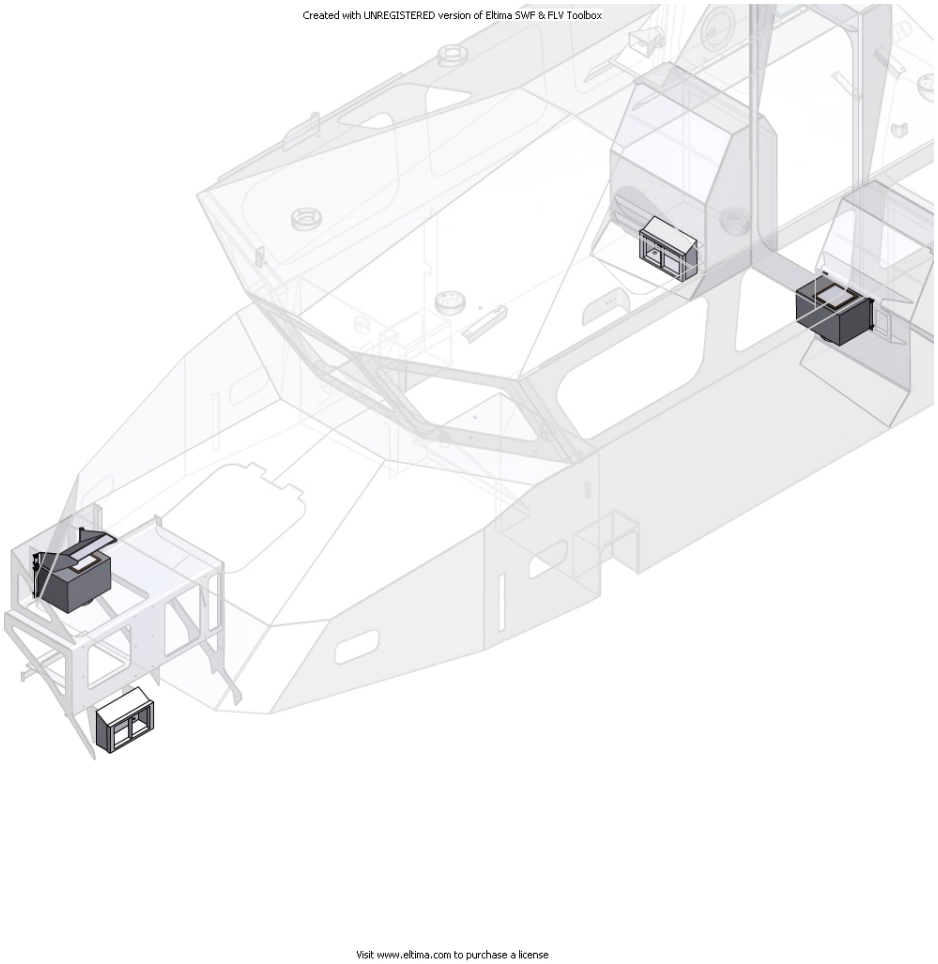

COMPARTMENT HEATING SYSTEMS

Figure 1

Electric Standalone Heater

Each 1500W Standalone heater contains a heating element, motor driven blower, thermal overload protection and a thermostat controller. When energized, the motor driven blower forces air over the heating element and fin plates, warming the air and distributing it into the space. The thermal overloads secure power to the heating elements when the temperature as above the set limit.

The standalone electric heater receives 120VAC from the 240P1 AC Power Panel and is controlled by the HVAC Elite Controller.

Duct Heating

Draft
Further dissemination only as directed by Commandant (CG-937) or higher Coast Guard authority.

Each 3000W Duct Heater is used to provide heat when sea water temperatures are too cold for adequate reverse-cycle heating from the AC unit. The Duct heater is installed in the discharge air ducting of the AC unit.

Each heater receives air flow from the AC unit blower fan to distribute heat to the space. To prevent over heating during air flow loss, the heater has a 2–stage thermal protection system:

- 140 °F — Auto Reset
- 180 °F — Manual Reset

The interior is insulated to keep the outside of the heater cool.

The duct heater receives 240 VAC from the AC unit heater relay.

Draft
Further dissemination only as directed by Commandant (CG-937) or higher Coast Guard authority.

Draft
Further dissemination only as directed by Commandant (CG-937) or higher Coast Guard authority.

J.4. HVAC Cooling Water System

HVAC Cooling Water System

The HVAC Cooling Water System provides seawater to the HVAC units in the Pilothouse and Survivors' Compartment. The cooling water system consists of:

- Suction Strainer
- HVAC Raw Water Pump
- Needle Valve
- Overboard Check Valves

Seawater is drawn from the seachest through a suction valve and simplex suction strainer by an electric pump. The pump sends the water to the HVAC units through a needle valve and isolation valves before discharging overboard through check valves.

Draft
Further dissemination only as directed by Commandant (CG-937) or higher Coast Guard authority.

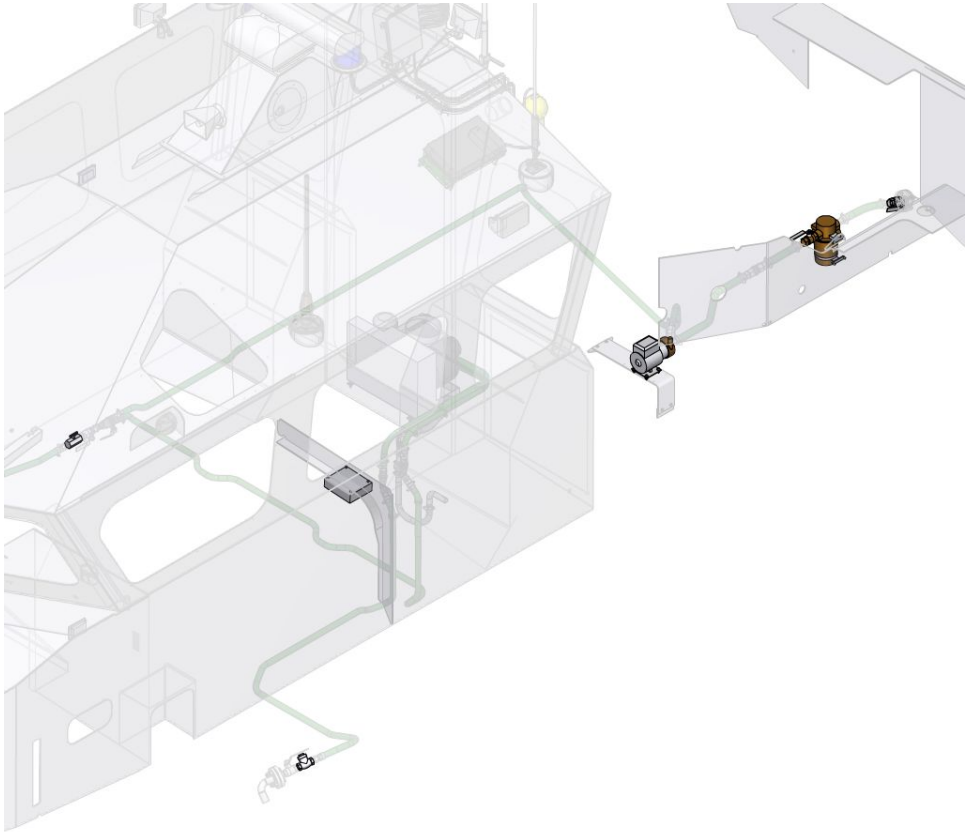

HVAC COOLING WATER SYSTEM

Figure 1

Suction Strainer

The Suction Strainer is a simplex strainer that prevents foreign debris from clogging the cooling system and damaging cooling system components. The strainer has a removable monel strainer basket.

Draft
Further dissemination only as directed by Commandant (CG-937) or higher Coast Guard authority.

CAUTION !

Avoid stepping on the brass strainer and hoses. This may cause the hose clamps to leak or cause damage to the strainer.

The suction strainer originates on the starboard side of the seachest. The suction strainer is located forward of the seachest, starboard off-center line next to the grating in the Lazarette.

Cooling Water Pump

The HVAC Cooling Water Pump is an electric powered centrifugal pump rate at 12GPM. The pump provides cooling water to both HVAC units when the HVAC units are in operation.

The pump receives 240VAC 60Hz from the pump relay panel and is located in the Engine Room.

Needle Valve

The HVAC units are located at different heights above the cooling pump. A needle valve, located in the Auxiliary Machinery Compartment, is installed in the Survivors' Compartment cooling water line to ensure an equal amount of cooling water is supplied to both HVAC units.

Overboard Discharge

Cooling water exiting each HVAC unit is routed overboard. Each overboard discharge line has an installed check valve to prevent water from flowing back into the system/RB-M when the system is secured or system maintenance is performed.

Draft
Further dissemination only as directed by Commandant (CG-937) or higher Coast Guard authority.

Draft
Further dissemination only as directed by Commandant (CG-937) or higher Coast Guard authority.

J.5. Electric Heating

Electric Heating

The Pilothouse and Survivor's Compartment are outfitted with electric heaters to warm the spaces as required. The two types of electric heaters are:

- 1500W Electric Standalone Heater
- 3000W Duct Heater

Each space has one of each heater. The heaters operate independently of each other.

CAUTION !

Avoid blocking heaters with bags or survival gear. This could become a fire hazard.

Draft
Further dissemination only as directed by Commandant (CG-937) or higher Coast Guard authority.

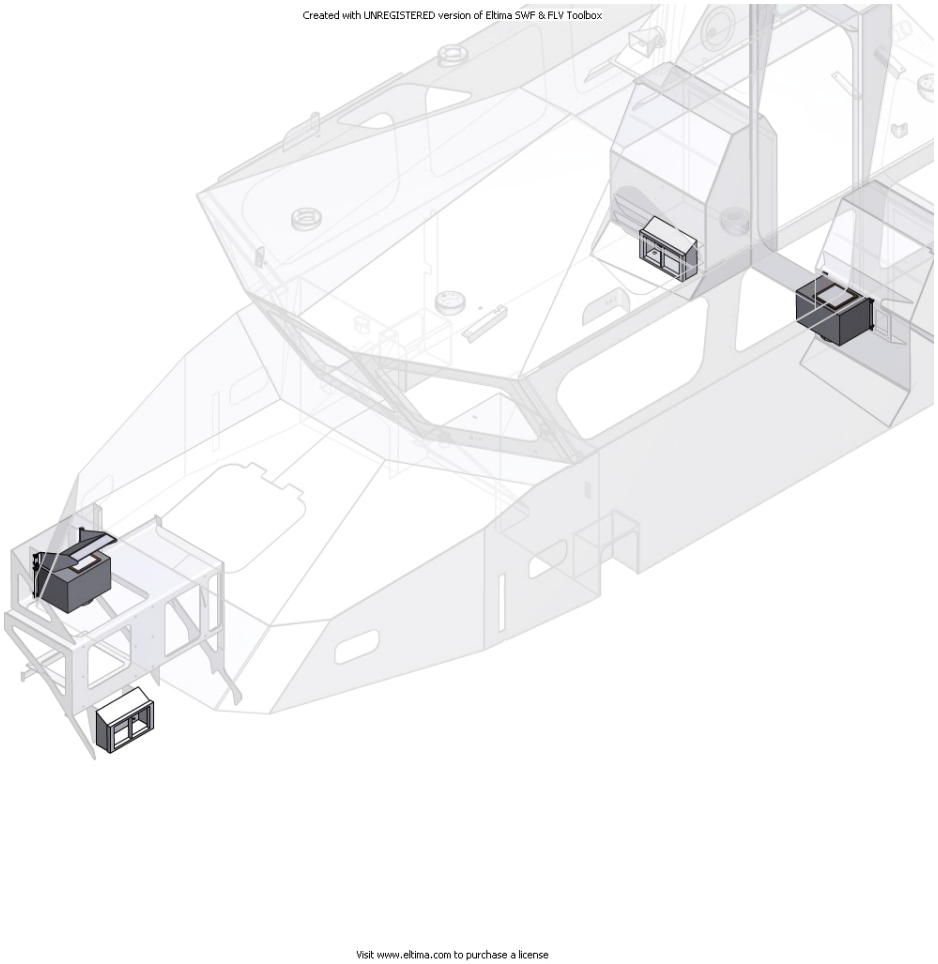

COMPARTMENT HEATING SYSTEMS

Figure 1

Electric Standalone Heater

Each 1500W Standalone heater contains a heating element, motor driven blower, thermal overload protection and a thermostat controller. When energized, the motor driven blower forces air over the heating element and fin plates, warming the air and distributing it into the space. The thermal overloads secure power to the heating elements when the temperature as above the set limit.

The standalone electric heater receives 120VAC from the 240P1 AC Power Panel and is controlled by the HVAC Elite Controller.

Duct Heating

Draft
Further dissemination only as directed by Commandant (CG-937) or higher Coast Guard authority.

Each 3000W Duct Heater is used to provide heat when sea water temperatures are too cold for adequate reverse-cycle heating from the AC unit. The Duct heater is installed in the discharge air ducting of the AC unit.

Each heater receives air flow from the AC unit blower fan to distribute heat to the space. To prevent over heating during air flow loss, the heater has a 2–stage thermal protection system:

- 140 °F — Auto Reset
- 180 °F — Manual Reset

The interior is insulated to keep the outside of the heater cool.

The duct heater receives 240 VAC from the AC unit heater relay.

Draft
Further dissemination only as directed by Commandant (CG-937) or higher Coast Guard authority.

Draft
Further dissemination only as directed by Commandant (CG-937) or higher Coast Guard authority.

J.6. Window Defroster

The pilothouse windows are defrosted by six Heater Craft 1002-H defrost heaters. Each defroster has multiple adjustable heads for directing air flow onto the side and aft windows. The forward windshields have heating trace wires for defrosting and defogging.

Draft
Further dissemination only as directed by Commandant (CG-937) or higher Coast Guard authority.

Draft
Further dissemination only as directed by Commandant (CG-937) or higher Coast Guard authority.

K. Weapons Mounting/Stowage

Introduction

Various weapons and ammunition are located throughout the RB-M to allow the crew to accomplish various missions in a safe and efficient manner. These items consist of:

- Pedestal Stand.
- Ammunition Stowage.
- Weapons Locks/Mounts.

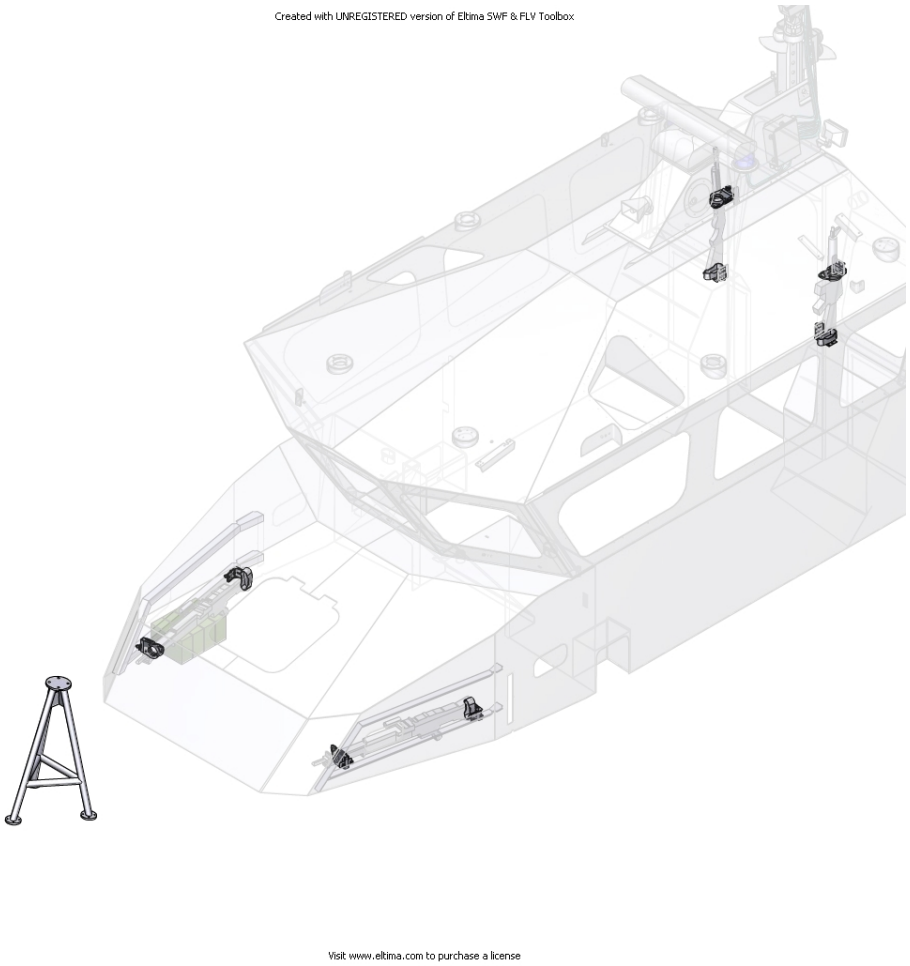

WEAPONS MOUNTING/STOWAGE

Figure 1

Draft
Further dissemination only as directed by Commandant (CG-937) or higher Coast Guard authority.

Draft
Further dissemination only as directed by Commandant (CG-937) or higher Coast Guard authority.

K.1. Pedestal Stands

Pedestal Stand	The Pedestal Stand is a weapon tripod that is mounted on the bow of the RB-M forward of the Forepeak QAWTH. The stand is used to mount the M240 Machine Gun for various missions. The Pedestal Stand is mounted to the deck with hex head screws, washers, and locknuts. A sealant, SIK 291BLK, is used between the stand feet and deck to prevent moisture from leaking into the Forepeak.

Draft
Further dissemination only as directed by Commandant (CG-937) or higher Coast Guard authority.

Draft
Further dissemination only as directed by Commandant (CG-937) or higher Coast Guard authority.

K.2. Ammunition Stowage

Ammunition Stowage	Ammunition for RB-M weapons is stored in the Survivors' Compartment. The Ammunition Storage Lockers are located forward of the head, above the seats, on the starboard side of the compartment.

Draft
Further dissemination only as directed by Commandant (CG-937) or higher Coast Guard authority.

Draft
Further dissemination only as directed by Commandant (CG-937) or higher Coast Guard authority.

K.3. Weapon Locks/Mounts

There are four weapons that can be securely stowed in gun locks on the RB-M. The Survivors' Compartment has gun locks mounted to the hull above the port and starboard folding seats. These gun locks provide for secure stowage for the two M240B Light Machine Guns. The Pilothouse has gun locks mounted on each side of the Pilothouse Door. The port gun lock provides for secure stowage of the Remington 870 Shotgun and the starboard gun lock provides for secure stowage of the M16 Rifle. Each gun lock can be secured with a lock to maintain security of the weapons.

Draft
Further dissemination only as directed by Commandant (CG-937) or higher Coast Guard authority.

Draft
Further dissemination only as directed by Commandant (CG-937) or higher Coast Guard authority.

L. Hull Exterior Lighting

Introduction

The RB-M has hull exterior lighting to provide for illumination based on the mission being performed. The types of exterior lighting consists of:

- Searchlight.
- Floodlights.
- Navigation Lights.
- Low Level Lights.

Draft
Further dissemination only as directed by Commandant (CG-937) or higher Coast Guard authority.

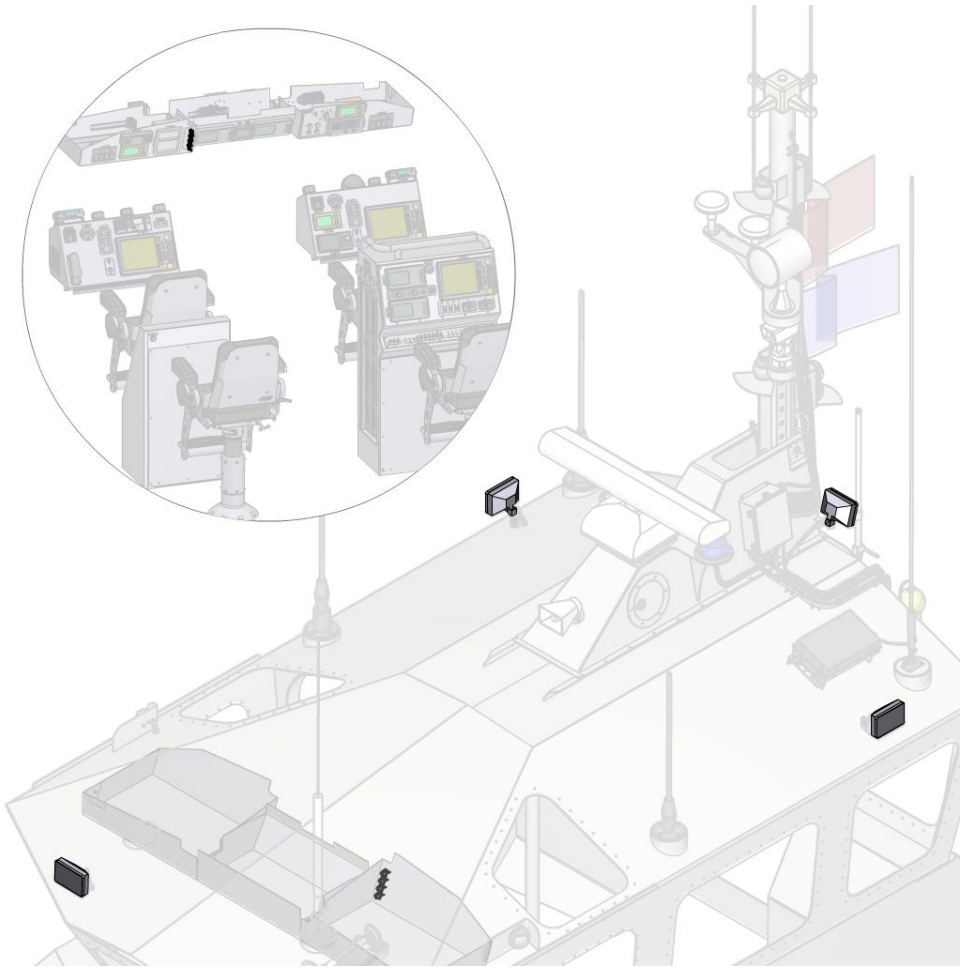

HULL EXTERIOR LIGHTING

Figure 1

Draft
Further dissemination only as directed by Commandant (CG-937) or higher Coast Guard authority.

L.1. Jabsco Searchlights

The 24-VDC Jabsco searchlight is located on the mast. The searchlight is remotely operated from the Lower Helm and Navigator Consoles. The Lower Navigator Console has a dual switch that transfers the searchlight controls between the Helm and Navigator consoles. The 8” searchlights are 500,000-candle power with a 370-degree turning radius and a 45-degree vertical radius. An internal brake system holds beam firmly on target. The control lever provides dual speed control for vertical and horizontal movement.

WARNING

The searchlight should not be energized when the mast is in the lowered postion. Attempting to use the searchlight with the mast lowered can damage the internal gearing of the light.

Draft
Further dissemination only as directed by Commandant (CG-937) or higher Coast Guard authority.

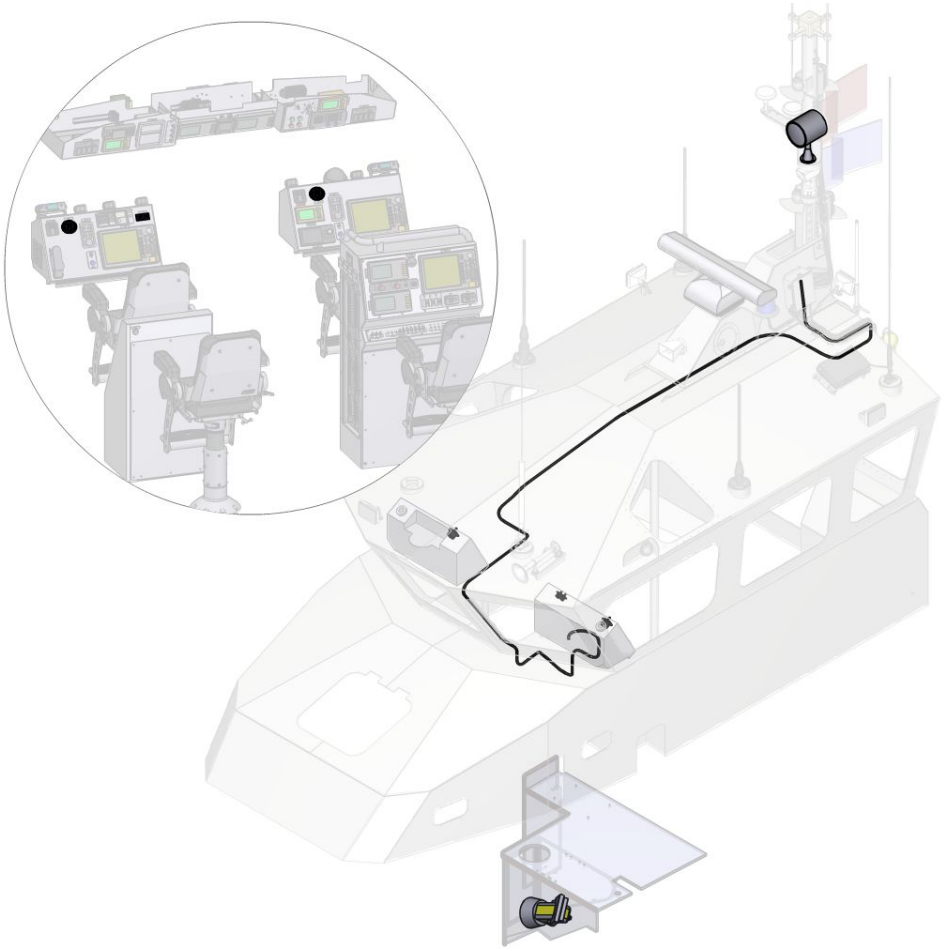

SEARCHLIGHTS

Figure 1

Draft
Further dissemination only as directed by Commandant (CG-937) or higher Coast Guard authority.

L.2. Jabsco Floodlights

Four Jabsco 24VDC floodlights are mounted atop the pilothouse and controlled by a switch panel located in the Upper Navigator Console. Each 60W floodlight measures 4”x6” and provides visibility to the deck in low light conditions.

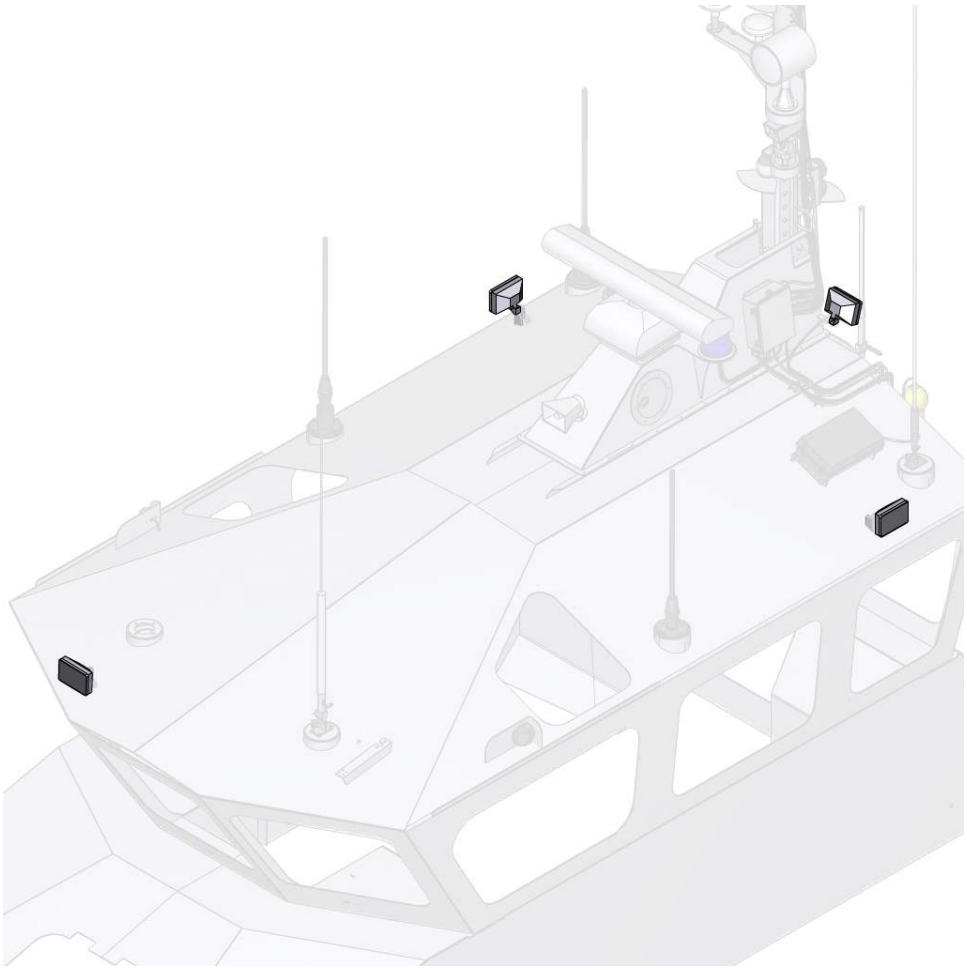

FLOODLIGHTS

Figure 1

Draft
Further dissemination only as directed by Commandant (CG-937) or higher Coast Guard authority.

Draft
Further dissemination only as directed by Commandant (CG-937) or higher Coast Guard authority.

L.3. Navigation Lights

Navigation Lighting System

The Navigation Lighting System onboard the RB-M allows the crew to provide operational status of the boat to all watercraft in the surrounding area. The Navigation Lighting System consists of:

1. Navigation Lighting Selector Switch.
2. Side Running Lights.
3. Mast Lights.

The Navigation Lighting System receives 24-VDC from the 24P1 DC Distribution Panel.

Navigation Lighting Selector Switch

The Navigation Lighting Selector Switch is a multi-function rotary switch that allows selection of different navigational lighting combinations. The lighting combinations are as follows:

1. Off.
2. Anchor.
3. Underway.
4. Towing Astern.
5. Along Side International.
6. Along Side Inland.

The Navigation Lighting Selector Switch is located in the Upper Helm Console.

Side Running Lights

The navigation lights on each side of the Pilothouse have color and arc of visibility as follows:

Light	Color	ARC
Port	Red	112.5°
Starboard	Green	112.5°

Mast Lights

Draft
Further dissemination only as directed by Commandant (CG-937) or higher Coast Guard authority.

The navigation lights located on the mast have color and arc of visibility as follows:

Light	Color	ARC
Anchor (Upper Aft Masthead)	White	225°
Upper Forward Masthead	White	225°
Lower Forward Masthead	White	225°
Stern	White	135°
Upper Stern	Yellow	135°
Lower Stern	Yellow	135°

Draft
Further dissemination only as directed by Commandant (CG-937) or higher Coast Guard authority.

L.4. Low Level Lights

There are ten LED 24-VDC Low Level Lights that illuminate the aft platform, aft deck, and the starboard/port rescue recesses. The lights are located the following areas:

Low Level Light Locations

Port Rescue Recess Forward	Starboard Rescue Recess Forward
Port Rescue Recess Aft	Starboard Rescue Recess Aft
Pilothouse Side Port Aft	Pilothouse Side Starboard Aft
Port Vent Box	Starboard Vent Box
Port Swim Step	Starboard Swim Step

Draft
Further dissemination only as directed by Commandant (CG-937) or higher Coast Guard authority.

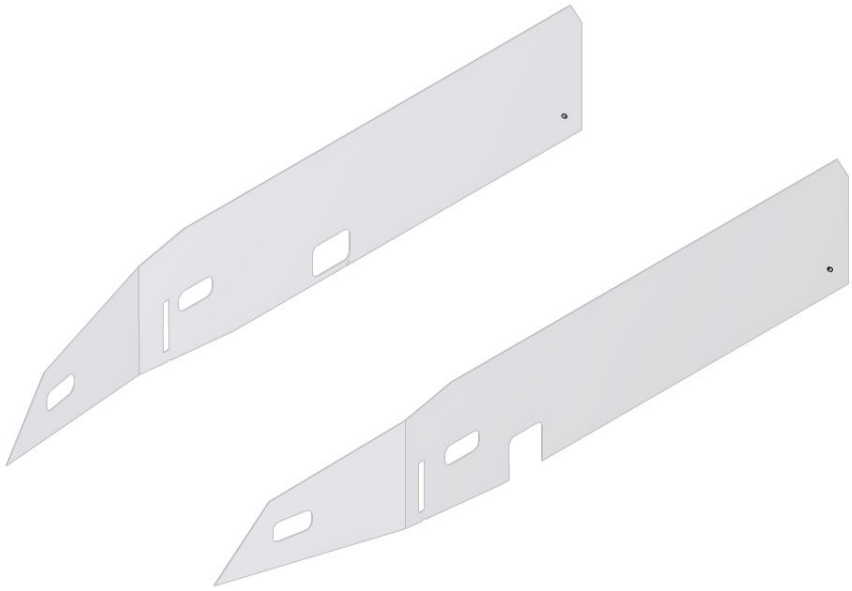

LOW LEVEL LIGHTS

Figure 1

The lights are controlled by a single dimmer switch located on the Primary Crew Console. The dimmer switch controls the intensity of the lights from completely extinguished to full brightness.

The Low Level Lights receive 24-VDC from the 24P3 Distribution Panel.

Draft
Further dissemination only as directed by Commandant (CG-937) or higher Coast Guard authority.

M. Ancillary Systems and Furnishings

Introduction

The RB-M is equipped with various systems and furnishings to support mission requirements. These systems and furnishings consist of:

- Windshield Wipers and Washer System.
- Sewage System.
- Freshwater System.
- Seating System.
- First Aid Kit.
- Internal Lights
- Miscellaneous Stowage.
- EPIRB.
- Sacrificial Zinc Anodes.
- CCTV (Engine Room Camera).
- Kahlenberg Low Pressure Air Compressor.

Draft
Further dissemination only as directed by Commandant (CG-937) or higher Coast Guard authority.

Draft
Further dissemination only as directed by Commandant (CG-937) or higher Coast Guard authority.

M.1. Windshield Wipers and Washer System

Windshield Wiper and Washer System

The Windshield Wiper and Washer System is used to keep the three windshields clear during inclimate weather conditions. The Windshield Wiper and Washer System consists of the following:

- Windshield Wipers.
- Windshield Wiper Motor.
- Washer Reservoir with Pumps.
- Windshield Wiper/Washer Controls.

Draft
Further dissemination only as directed by Commandant (CG-937) or higher Coast Guard authority.

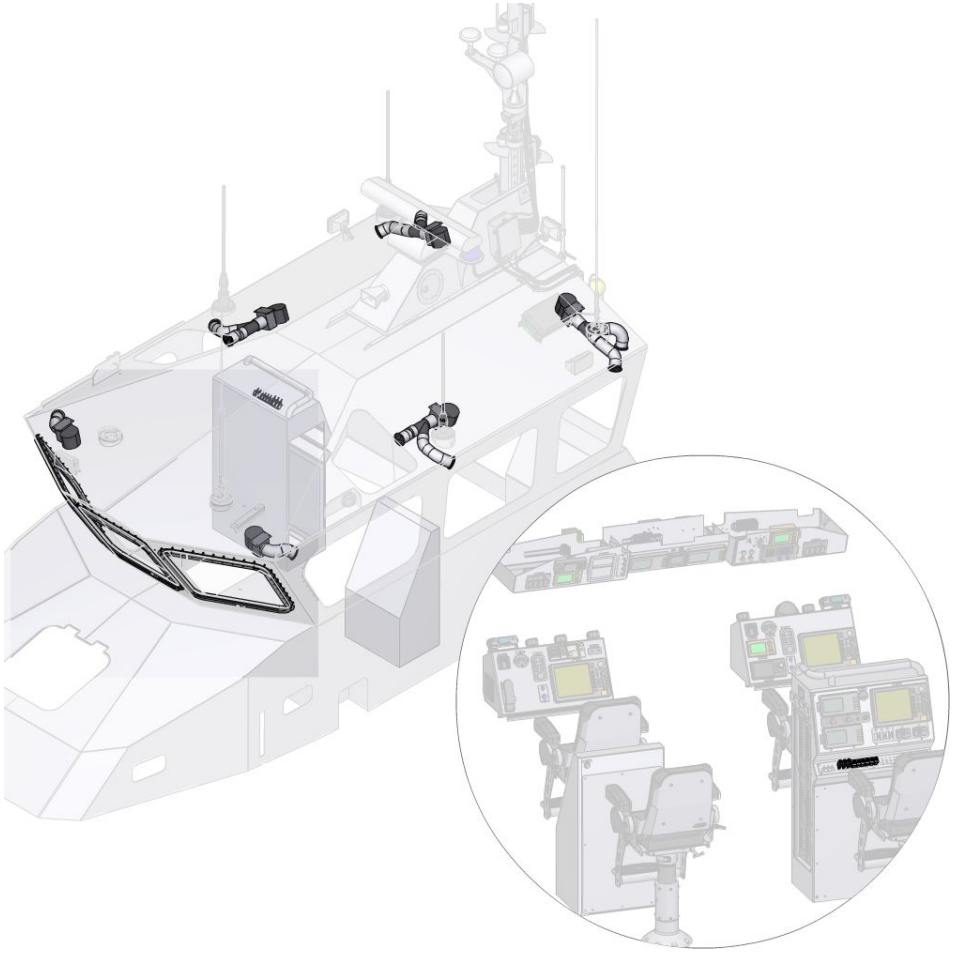

WINDSHIELD WIPER AND WASHER SYSTEM

Figure 1

The Windshield Wiper and Washer System receives 24-VDC from the 24P1 DC Distribution Panel.

Windshield Wiper

There are Windshield Wipers for the Port, Center and Starboard Windshields. Each wiper consists of an arm, blade and wash nozzle. The wiper arm and blade are a heavy duty design and will operate in all weather conditions. The wash nozzle is mounted as an integral part of the wiper and works at any wiper speed. The wiper is mounted to the shaft of the wiper motor.

Windshield Wiper Motor

Draft
Further dissemination only as directed by Commandant (CG-937) or higher Coast Guard authority.

There is a wiper motor mounted directly below each windshield in the Pilothouse. Each motor drive shaft protrudes through the bulkhead to move the wiper arm. The wiper motor is a 24-VDC heavy duty motor with sealed bearings and is corrosion resistant to ensure operation in all environments. Each wiper motor has a cover to prevent entry of debris that could affect the wiper motor operation.

The wiper motors are connected to the wiper/wash pump control pads through a wiper system control box.

Washer Reservoir with Pumps

A Washer Reservoir is located in the Survivors' Compartment on the Aft Port Bulkhead. The reservoir will hold 10 liters of washer fluid. The reservoir has a fill cap at the top and three wash pumps for fluid distribution to the windshields. The reservoir is semi-transparent for easy verification of fluid level.

The wash pumps are controlled by wiper/wash pump control pads.

Windshield Wiper/Wash Controls

The Windshield Wiper/Wash Control Pads are located on the Lower Helm Console and Lower Navigator Console. The control pads are exactly the same and are always enabled to control the wipers and wash pumps.

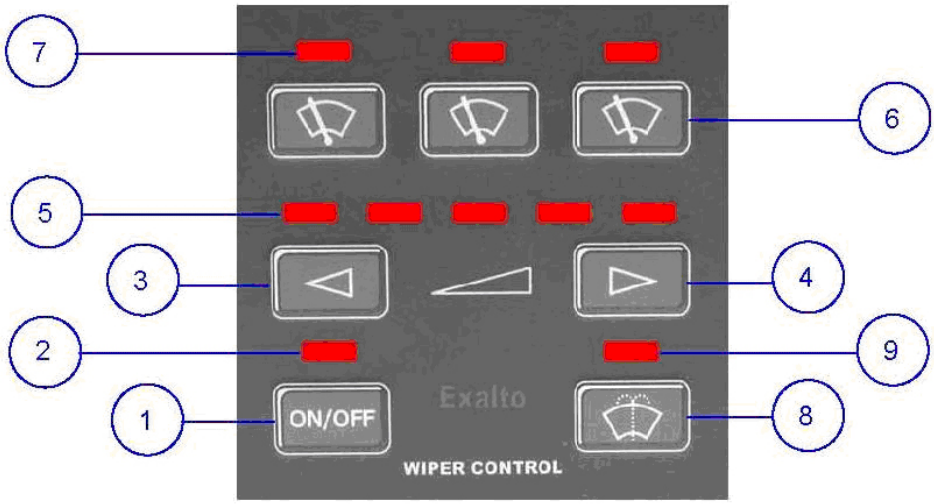

WINDSHIELD WIPER/WASH CONTROLS

Figure 2

Draft
Further dissemination only as directed by Commandant (CG-937) or higher Coast Guard authority.

Windshield Wiper/Wash Controls (See) consist of:

1. Main ON/OFF Button: Turns the system ON and OFF.
2. Power Indicator: LED will illuminate when system power is ON.
3. Speed/Intermittent Button: Reduces the speed and increases the intermittent delay of the wiper.
4. Speed/Intermittent Button: Increases the speed and decreases the intermittent delay of the wiper.
5. Speed/Intermittent LED Indicator Bar: Indicates the speed/intermittent setting.
6. Individual Wiper ON/OFF Buttons: Turns each wiper ON or OFF.
7. Individual Wiper LED Indicators: LED will illuminate when the wiper is active.
8. Wipe/Wash Button: Initiates the wipe/wash function.
9. Wipe/Wash LED Indicator: LED will illuminate when the wipe/wash program is active.

Draft
Further dissemination only as directed by Commandant (CG-937) or higher Coast Guard authority.

M.2. Sewage System

Sewage System

The RB-M has a Thetford Cassette Toilet Model 402C sanitation device located in the Head, which is located in the Survivors' Compartment. The sanitation device consists of the following:

- Toilet.
- Freshwater Tank.
- Waste Cassette.

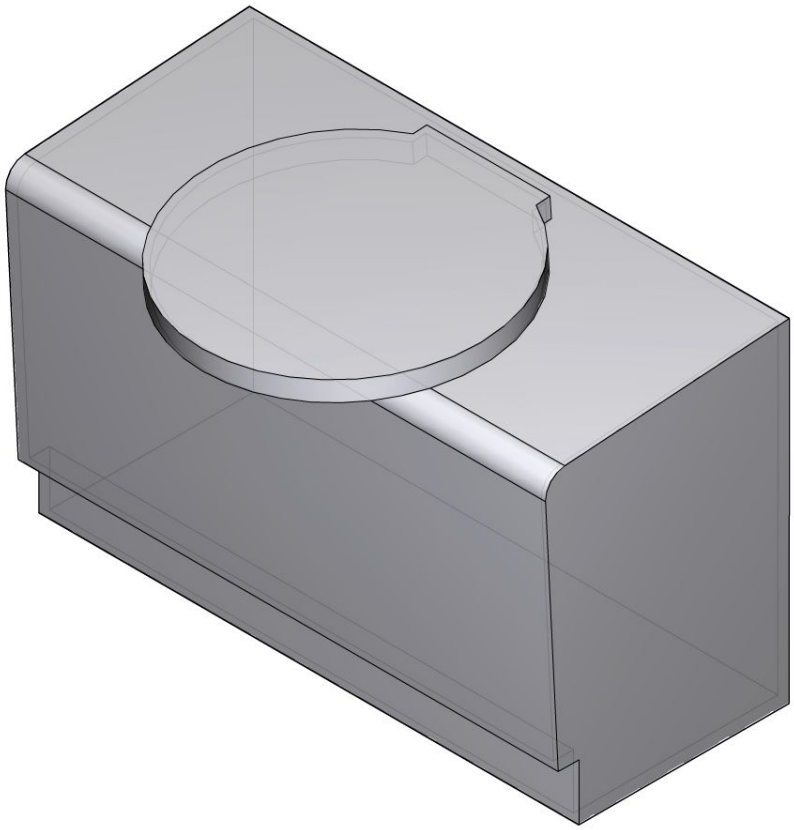

SEWAGE SYSTEM

Figure 1

Draft
Further dissemination only as directed by Commandant (CG-937) or higher Coast Guard authority.

The toilet receives 12-VDC from the 12P1 Distribution Panel for flush and LED operation.

Toilet

The toilet is secured and sealed to the head deck with an inspection plate forward of the toilet to ensure bolts are tight and to inspect the bilge below the head. There is a control panel located on the outboard side of the toilet that provides for flush control and LED indication when the waste cassette is full. The electric flush pump is located within the toilet assembly.

Freshwater Tank

The toilet freshwater tank is integrated with the toilet and holds 15 liters (3.96 gallons) of water. The freshwater tank can be filled with a garden hose or bottled water.

Waste Cassette

The toilet has a portable waste cassette with wheels and extendable carrying handles and holds 20 liters (5.28 gallons). The waste cassette is removed from the toilet through a small door under the step leading down into the Survivors' Compartment. The waste cassette has an integrated waste pour-out-spout to be poured into sewer cleanouts or commercial pump-out stations and a built-in vent button allowing splash free operations while emptying.

Draft
Further dissemination only as directed by Commandant (CG-937) or higher Coast Guard authority.

M.3. Freshwater System

Freshwater System

The RB-M has a portable 5-gallon water dispenser located in the galley section of the Survivors' Compartment. The water dispenser is secured in-place on the galley counter with two tie-down straps and has a fast flow spigot. The water dispenser spigot is located over the sink.

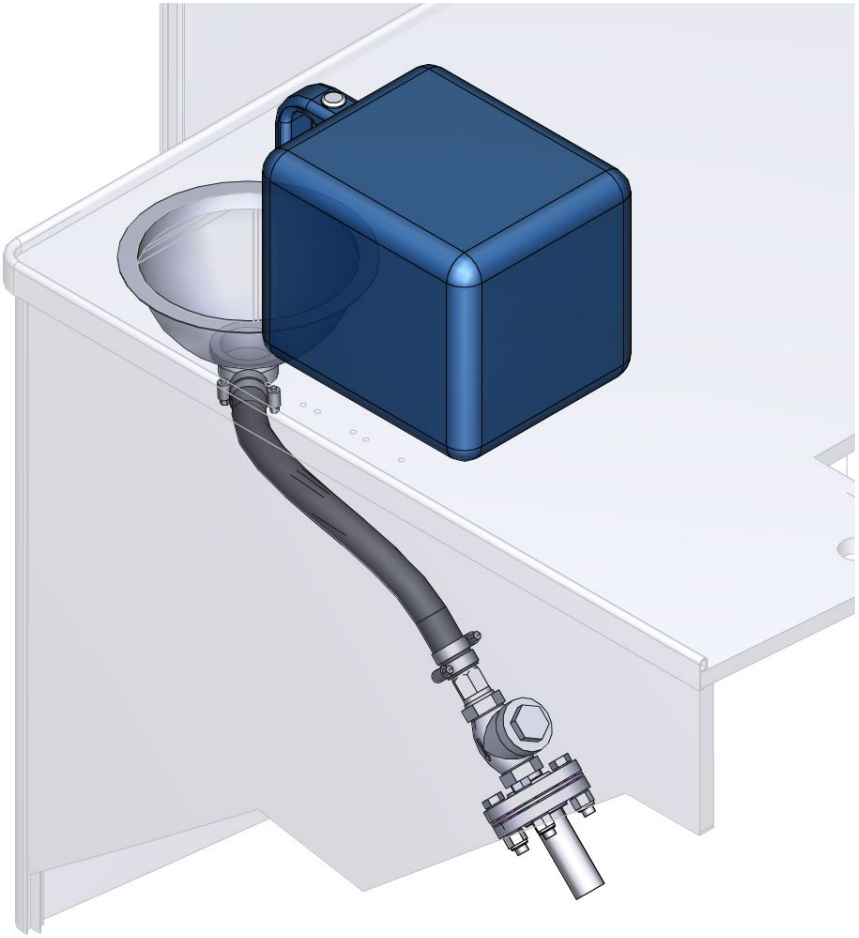

FRESHWATER SYSTEM

Figure 1

Draft
Further dissemination only as directed by Commandant (CG-937) or higher Coast Guard authority.

Draft
Further dissemination only as directed by Commandant (CG-937) or higher Coast Guard authority.

M.4. Seating System

Seating System

The Pilothouse is outfitted with four forward-facing shock mitigating STIDD Seats. The seats are fixed, shock mitigating and adjustable for comfortable support of the crew in high speed and/or heavy weather operations. The seats are located at the following stations:

- Helm Station.
- Navigator Station.
- Primary Crew Station.
- Crew Station.

Draft
Further dissemination only as directed by Commandant (CG-937) or higher Coast Guard authority.

SEATING SYSTEM

Figure 1

Seats are sized to accommodate personnel in personal protective equipment including insulated flotation coveralls survival vests, gloves, boots, side arms, and helmets.

The Helm and Navigator Seats each have electronic tillers and joysticks for steering and speed control in the front of the armrests.

Seat Operation

All seats have aircraft style seat belts for high speed or heavy weather operations. The seats are also adjustable to accommodate crew member size. The seat adjustments are:

Draft
Further dissemination only as directed by Commandant (CG-937) or higher Coast Guard authority.

- Seat Arm Rest: a lock button allows seats arms to raise and lower. The arm rest lock button is located on the arm rest pivot point.
- Seat Rotation: a swivel clamp and swivel detent handle allow the seat to rotate toward center line for ease of the crew getting in and out of the seat. The swivel clamp and detent handle are located under the left side of the seat (when seated).
- Seat Fore-Aft: a seat side clamp handle allows the seat to move forward and backward. The seat side clamp is located under the right side of the seat (when seated).
- Seat Backrest: a backrest locking handle allows the back of chair to recline under tension. The backrest locking handle is located on the right side of the chair under the armrest pivot point.

Draft
Further dissemination only as directed by Commandant (CG-937) or higher Coast Guard authority.

Draft
Further dissemination only as directed by Commandant (CG-937) or higher Coast Guard authority.

M.5. First Aid Kit

One ten-person First Aid Kit is provided with each RB-M. The First Aid Kit contains four modules equipped to treat injuries normally encountered during boat underway evolutions. Each module contains specific supplies to treat common first aid problems, cuts and splinters, sprains and fractures, CPR, and burns.

The First Aid Kit is stowed in the forward starboard stowage cabinet at Frame 14 in the Survivors' Compartment.

Draft
Further dissemination only as directed by Commandant (CG-937) or higher Coast Guard authority.

Draft
Further dissemination only as directed by Commandant (CG-937) or higher Coast Guard authority.

M.6. Internal Lights

Internal Lights

The Internal Lighting on the RB-M provides controlled illumination of the compartments. The lights are LED illumination and can be varied in intensity as required. The two internal lights are:

- White.
- Red/White.

The Internal Lighting receives 24-VDC from the 24P1 DC Distribution Panel.

White Lights

The White Lighting is located in the Engine Room and the AMC. The Engine Room has eleven lights and the AMC has five lights. The Engine Room lights receive power directly from the distribution panel and have no control switch. The AMC lights have an ON/OFF control switch in the space next to the ladder.

Red/White Lights

Red/White Lighting is located in the Forepeak, Survivors Compartment, Head, Pilothouse, and Lazarette. Each space has a dimmer control switch to vary the intensity of the lighting from all white and red illuminated, to red only illuminated, to all lights off.

The dimmer control switches for the Forepeak, Survivors' Compartment, Head and Lazarette are located adjacent to the compartment accesses. The dimmer control switch for the Pilothouse is located on the Primary Crew Console.

Draft
Further dissemination only as directed by Commandant (CG-937) or higher Coast Guard authority.

Draft
Further dissemination only as directed by Commandant (CG-937) or higher Coast Guard authority.

M.7. Emergency Position Indicating Radio Beacon

The RB-M is outfitted with a 406 MHz Category II Emergency Position Indicating Radio Beacon (EPIRB) with a built-in Global Positioning System (GPS) location transmitter. The EPIRB is a manually deployable, self-buoyant unit equipped with a self-test feature that confirms operation as well a battery condition and GPS position data.

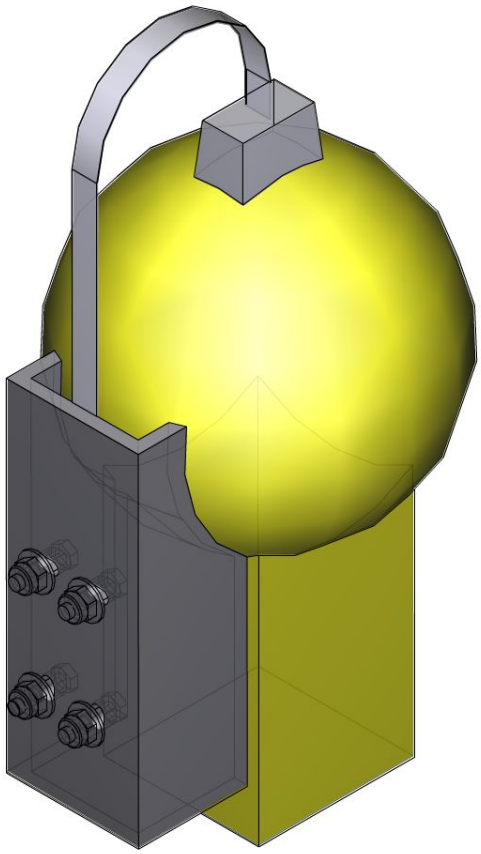

EPIRB

Figure 1

The EPIRB is mounted in a bracket on the port side aft of the Pilothouse, center-lined with the Aft Port Window.

Draft
Further dissemination only as directed by Commandant (CG-937) or higher Coast Guard authority.

NOTE

Units are responsible for ensuring the EPIRB is properly registered with the National Oceanic and Atmospheric Administration (NOAA).

Draft
Further dissemination only as directed by Commandant (CG-937) or higher Coast Guard authority.

M.8. Sacrificial Zinc Anodes

Sacrificial Anodes

Sacrificial Anodes are installed onboard the RB-M in various locations to minimize the corrosion of the hull and components that are external to the hull. Sacrificial Anodes are located:

1. Jet Drives.
2. Hull.
3. Engines.

A Hull Reference Meter provides for monitoring of boat corrosion.

Jet Drive Anodes

The Jet Drives have 13 anodes mounted on different components to minimize corrosion. The anodes are located:

1. Reversing Bucket (2)
2. Guide Vane Chamber (2)
3. Guide Vane Chamber to Impeller Housing Interface (2)
4. Jet Drive Aft Exterior Housing (2)
5. Guide Vane Chamber behind rubber bearing end of shaft (1)
6. Reversing Bucket Rod (1)
7. Inside Zinc Anode Hatch (1)
8. Zinc Inspection Hatch (1)
9. Interceptor (1)

Each one is bolted in-place to facilitate replacement when required.

Hull Anodes

There are two hull mounted anodes on the RB-M Hull. There is one each on the port and starboard side of the transom. Each one is bolted to the hull to facilitate replacement when required.

Engine/Reduction Gear Anodes

Draft
Further dissemination only as directed by Commandant (CG-937) or higher Coast Guard authority.

There are three anodes located throughout the Engine/Reduction Gear Raw Water System. The anodes are located:

1. Raw Water Pump Discharge Line Elbow (Figure 3-?)
2. Raw Water Pipe to Reduction Gear Oil Cooler (Figure 3-?)
3. Reduction Gear Oil Cooler (Figure 3-?)

Each one is threaded in-place to facilitate replacement when required.

Hull Reference Meter

The Hull Reference Meter measures the amount of corrosion ongoing between the water and the boat. The meter indicates three protection level zones for the boat:

1. SAFE (Green): indicates sufficient anode protection, whether the boat is moored or underway.
2. UNDER (Red): indicates insufficient anode protection, requiring immediate attention and correction of the problem. The more into this red zone, the more rapid the corrosion attack on the boat.
3. OVER (Red): indicates too much anode protection, requiring immediate attention and correction of the problem. The more into this red zone, the greater the caustic attack on the boat.

The meter has a reference cell located on the transom just outboard of the starboard water jet. The corrosion process generates the electricity required to operate the Hull Reference Meter.

The Hull Reference Meter is located on the Primary Crew Console.

Draft
Further dissemination only as directed by Commandant (CG-937) or higher Coast Guard authority.

M.9. CCTV (Engineroom Camera)

CCTV System

The CCTV System onboard the RB-M allows for remote monitoring of the Engine Room during missions. The CCTV System consists of:

- Engine Room Camera.
- Video Select Switch.

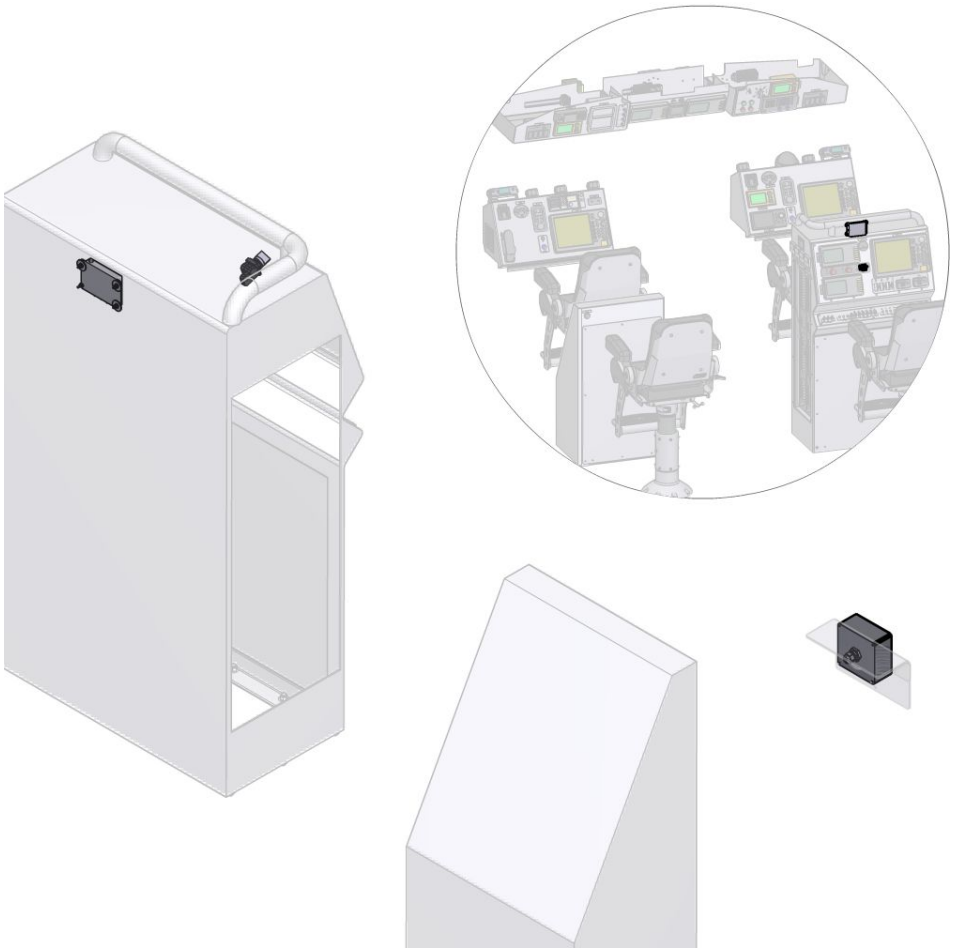

CCTV

Figure 1

Engine Room Camera

Draft
Further dissemination only as directed by Commandant (CG-937) or higher Coast Guard authority.

The Engine Room Camera is located at the forward bulkhead centerline. The camera has a 6 mm auto iris lens with a 68 degree viewing field that provides a color picture on the Primary Crew Console Chart Plotter Display. The camera is mounted in an unbreakable enclosure.

The Engine Room Camera receives 12-VDC from the 12P1 DC Distribution Panel.

Video Select Switch

The Video Select Switch is located on the Primary Crew Console. The switch provides for selection of video feed from either the Engine Room Camera or the FLIR for viewing on the Primary Crew Console Chart Plotter Display.

Draft
Further dissemination only as directed by Commandant (CG-937) or higher Coast Guard authority.

M.10. Kahlenberg Low Pressure Air Compressor

Kahlenberg Low Pressure Air Compressor

The Kahlenberg Low Pressure Air Compressor is an “on-demand” system for the operation of the RB-M Air Horn and the Pneumatically Operated Pilothouse Window Seals. The Compressed Air System consists of the following:

- Air Compressor.
- Air Receiver.
- Pressure Switch and Relief Valve.
- Water Separator.
- Air Filter.

Draft
Further dissemination only as directed by Commandant (CG-937) or higher Coast Guard authority.

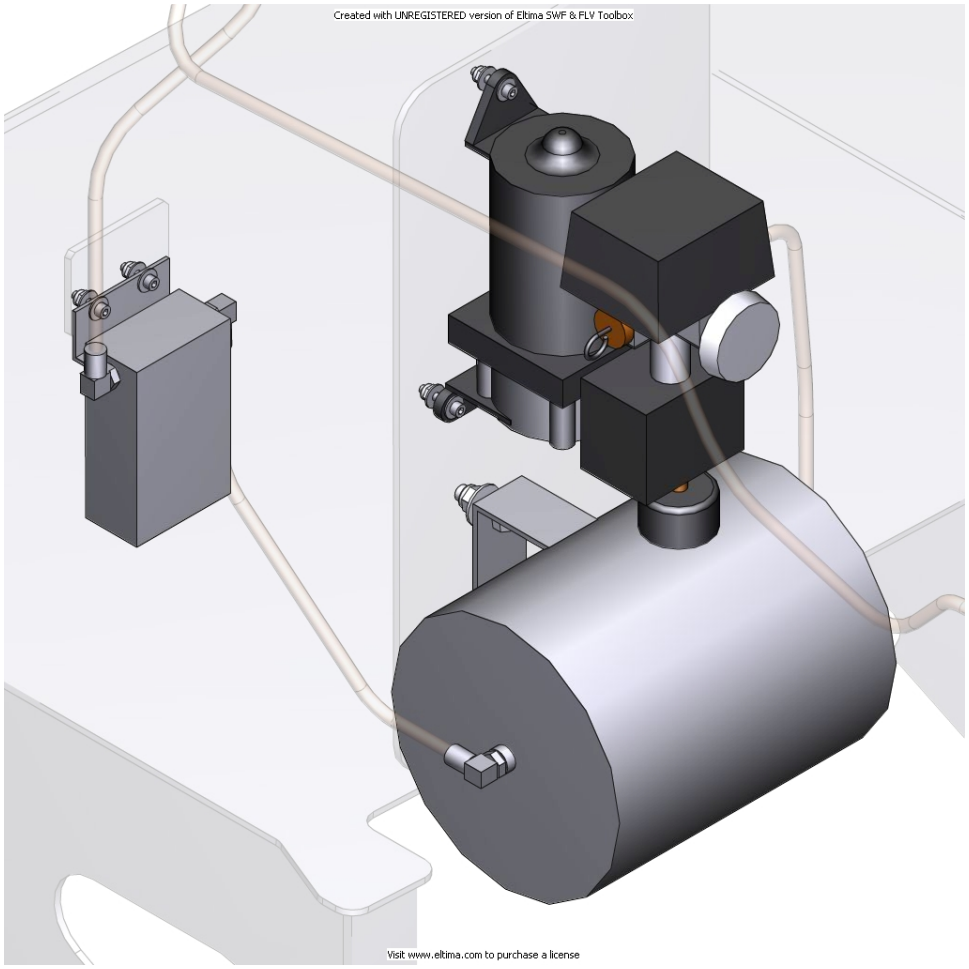

COMPRESSOR KIT

Figure 1

All Kahlenberg Low Pressure Air Compressor components are located in the Auxiliary Machinery Compartment and receive 24-VDC from the 24P1 Distribution Panel.

Air Compressor

The Air Compressor is a single stage, oil-free, reciprocating type air compressor driven by a 24-VDC motor rated at 0.62 CFM at 100 PSI. The air compressor has an air filter, pressure gauge, and an internal thermal disconnect switch to prevent the unit from damage in case the unit is operated beyond design limits.

Air Receiver

Draft
Further dissemination only as directed by Commandant (CG-937) or higher Coast Guard authority.

The Air Receiver receives compressed air through a flexible nylon hose and stores 257 cubic inches of low pressure air. The receiver is fitted with a drain valve to allow for the removal of condensation. Air flows from the receiver to the air horn or pneumatic window seals as needed through flexible nylon hoses.

Pressure Switch and Relief Valve

A pressure switch mounted on the compressor senses outlet pressure to the air receiver and cycles the air compressor to meet system demand.

- When air pressure drops below 100 PSIG, the air compressor will start.
- When air pressure reaches 125 PSIG, the air compressor will stop.

A relief valve is also mounted on the compressor and lifts at 165 PSIG to protect the air compressor and prevent over-pressurization of the air receiver and system hoses.

Water Separator

The water separator removes moisture from the compressed air. It contains a resin-impregnated element designed to remove 99% of moisture from the air. It has a normally closed auto drain valve that will open at 21.7 psid.

The water separator is located in the Auxiliary Machinery Compartment starboard side forward of the compressor.

Air Filter

The air filter removes particulate matter from the compressed air 5 microns or larger to prevent clogging of the window seal and air horn components. The filter has a normally closed automatic drain valve that will open when pressure in the filter exceeds 14.5 psid.

The air filter is located in the Auxiliary Machinery Compartment starboard side forward of the compressor.

Draft
Further dissemination only as directed by Commandant (CG-937) or higher Coast Guard authority.

Draft
Further dissemination only as directed by Commandant (CG-937) or higher Coast Guard authority.

Crew Requirements Introduction

Introduction

The U.S. Coast Guard Boat Operations and Training (BOAT) Manual, Vol. I, COMDTINST M16114.32 (series), provides minimum standards and guidelines for competence onboard the 45’ RB-M. Each crewmember should be familiar with the duties of the other crewmembers in addition to his/her own duties. It is important for a crewmember to know and commit to memory all important characteristics of the boat and its equipment, and which procedures to follow in the event of a casualty. Each crewmember should mentally rehearse the procedures each member of the crew would follow during any operational casualty. Teamwork is the common thread that allows the crew to succeed. Whenever the opportunity is available, the crew should get the boat underway to practice operational and emergency procedures.

Draft
Further dissemination only as directed by Commandant (CG-937) or higher Coast Guard authority.

Draft
Further dissemination only as directed by Commandant (CG-937) or higher Coast Guard authority.

Section A. Minimum Crew

Certified Crew	The minimum certified crew requirement for the 45FT RB-M shall be in accordance with the U.S. Coast Guard Boat Operations and Training (BOAT) Manual, Vol. II, COMDTINST M16114.33 (series). Additional crew may be necessary as determined by the nature of the specific mission undertaken.

Draft
Further dissemination only as directed by Commandant (CG-937) or higher Coast Guard authority.

Draft
Further dissemination only as directed by Commandant (CG-937) or higher Coast Guard authority.

Section B. Coxswain

Introduction

The Coast Guard places great trust in each coxswain and his or her ability to accomplish the assigned missions in a safe and professional manner, even under adverse conditions. The position of coxswain is one of high regard and great responsibility.

The coxswain is responsible for the boat and its crew during every mission. The coxswain assigns and directs all onboard functions during each operation.

Authority and Responsibility

The extent of the authority and responsibility of the coxswain is specified in the U.S. Coast Guard Regulations Manual, COMDTINST M5000.3 (series) as follows:

"The coxswain shall be responsible, in order of precedence, for the safety and conduct of passengers and crew; the safe operation and navigation of the boat assigned; and the completion of the sortie or mission(s) assigned or undertaken pursuant to USCG policy and regulations. An underway coxswain will at all times respond within the limits of capabilities and legal authority to observed hazards to life or property, and violations of law or regulations."

The coxswain is the direct representative of the Commanding Officer (CO) or Officer-in-Charge (OIC) and, as such (subject to Articles 88-89 of the UCMJ), has the authority and responsibilities that are independent of rank or seniority in relation to other personnel embarked. The authority and responsibility of the coxswain exist only when the boat is engaged on a specific sortie or mission.

Relief of Responsibility

The only person embarked in the boat who may relieve the coxswain of the responsibility as described above is:

- The CO/OIC, Executive Officer (XO), or Executive Petty Officer (XPO).
- A senior officer at the scene of a distress emergency or other abnormal situation who exercises authority under the provisions of USCG Regulations, whether or not other units are involved.

Heavy Weather Operation

Operating in heavy weather without an experienced coxswain can seriously jeopardize the safety of the boat, its crew and the mission. The coxswain must consider many factors when operating in heavy weather. These factors include case severity, experience of the crew, period and type of waves, water and air temperature,

Draft
Further dissemination only as directed by Commandant (CG-937) or higher Coast Guard authority.

and forecasted weather. The above describes the principal roles and knowledge of the heavy weather coxswain, which is an advanced coxswain certification.

NOTE

During all risk assessment decision making processes, crew members, coxswains, unit commands and all elements exercising operational control over a boat shall consider individual boat capability, crew assignments, and the nature of distress when assigning response units when heavy weather conditions exist or are likely to be encountered. Heavy weather is determined to exist when seas exceed 8’ or winds are greater than 30 knots.

Draft
Further dissemination only as directed by Commandant (CG-937) or higher Coast Guard authority.

Section C. Engineer

Introduction	The position of boat engineer is one of great responsibility. The knowledge and skill of the engineer can make the difference in completing the mission under adverse conditions.
Qualifications	The boat engineer must be a certified crewmember prior to obtaining certification as a boat engineer since they must perform duties in both capacities.
Responsibilities	The primary responsibilities of this position include operational and underway maintenance of the propulsion and auxiliary systems. The engineer may also serve as: • senior crew member, • safety observer, • boarding officer, • line handler, • helmsman, • surface swimmer, • emergency medical technician, or • other such duties as may be assigned by the coxswain in support of operational and training sorties or missions.

Draft
Further dissemination only as directed by Commandant (CG-937) or higher Coast Guard authority.

Draft
Further dissemination only as directed by Commandant (CG-937) or higher Coast Guard authority.

Section D. Crew Members

Introduction	Under direct supervision of the coxswain, the crew member is responsible for line handling, acting as lookout or helmsman, maintaining a towing watch, and assisting the coxswain as required during all evolutions or maneuvers.
Certified Crew Member	The crew member must be certified in accordance with the U.S. Coast Guard Boat Operations and Training (BOAT) Manual, Vol. I, COMDTINST M16114.32 (series) and U.S. Coast Guard Boat Operations and Training (BOAT) Manual, Vol. II, COMDTINST M16114.32 (series).
Additional Crewmembers	Additional crewmembers are assigned by the coxswain and certified by the CO/OIC based upon mission requirements.

Draft
Further dissemination only as directed by Commandant (CG-937) or higher Coast Guard authority.

Draft
Further dissemination only as directed by Commandant (CG-937) or higher Coast Guard authority.

Section E. Passengers

Introduction

Since passengers and survivors may not have any vessel or equipment knowledge, it is important they receive a basic safety brief prior to getting underway or soon after coming aboard. They should be provided with adequate safety or personal protective equipment based on the mission or situation. At a minimum, each shall wear an appropriate personal flotation device. When riding alone or rescued from adverse conditions, each person should be safely protected through use of boat crew safety belts or the installed seatbelts of the 45FT RB-M seats.

Draft
Further dissemination only as directed by Commandant (CG-937) or higher Coast Guard authority.

Draft
Further dissemination only as directed by Commandant (CG-937) or higher Coast Guard authority.

Section F. Training

Introduction	Qualification, certification and assignment as a crew member on a 45FT RB-M requires considerable time, effort and practice. The individual must learn the characteristics of the boat and its missions, as well as the adverse conditions of the sea and the environment in which the boat operates. Each break-in crew member must take the time to study his or her duties in addition to the duties of the other crew members since it may be necessary to perform any given duty in the event of an emergency.
Qualifications	The U.S. Guard Boat Operations and Training (BOAT) Manual, Volume II, COMDTINST M16114.33 (series) provides the standards for qualification as Coxswain, Heavy Weather Coxswain, Boat Engineer, and Crewman aboard the 45FT RB-M.
Training Underway	Where staffing permits, additional personnel may ride the boat in a training capacity to enhance their familiarity with the boat. To become and remain proficient as a crew member on this or any boat, an individual must get underway and practice his or her skills repeatedly.

Draft
Further dissemination only as directed by Commandant (CG-937) or higher Coast Guard authority.

Draft
Further dissemination only as directed by Commandant (CG-937) or higher Coast Guard authority.

Section G. Safety Equipment

Personal Protective Equipment

During all 45FT RB-M operations, crew members shall wear personal protective equipment as required by the Rescue and Survival Systems Manual, COMDTINST M10470.10 (series) and the Boat Crew Seamanship Manual, COMDTINST M16114.5 (series) for clarification.

NOTE

The coxswain is responsible for ensuring that all required personal safety equipment is worn, and worn correctly.

Protective Equipment During Heavy Weather

In accordance with the Heavy Weather Addendum of the Boat Crew Seamanship Manual, COMDTINST M16114.5 (series), crews operating in heavy weather must be properly equipped, as follows:

- Required hypothermia protective clothing.
- Helmet (helmet strap must be secured and adjusted properly).
- Survival vest and equipment.
- Waterproof footwear and boots should be worn.
- Eye protection may be necessary for visibility, particularly for persons wearing glasses, and will also protect against glass shards should a window be broken.
- Boat crew safety belt must be worn and adjusted correctly.
- Personal seat belt must be worn when in a seat.
- A GAR Model shall be conducted by the crew prior to launch including examination of all PPE for functionality and fit.

Waivers

In accordance with the Coast Guard Rescue and Survival Manual, COMDTINST M10470.10 (series), COs/OICs, on a single mission basis only, may waive the requirement for wearing a hypothermia protective device only after a determination that the risk associated with crew performance degradation, thermal stress, and environmental considerations are offset by the benefits associated with the waiver.

Draft
Further dissemination only as directed by Commandant (CG-937) or higher Coast Guard authority.

Draft
Further dissemination only as directed by Commandant (CG-937) or higher Coast Guard authority.

Operational Guidelines Introduction

Introduction

This chapter describes how to use the 45FT RB-M in the safest and most efficient manner. These policies and performance criteria should be used as guidelines for 45FT RB-M operations. Within these guidelines, consider local operating conditions, District regulations, and the skill of the crew to determine how the 45FT RB-M's capability is to be used. These factors must be considered prior to each sortie or mission.

This chapter contains the following sections:

- Operating Parameters
- Performance Data

Draft
Further dissemination only as directed by Commandant (CG-937) or higher Coast Guard authority.

Draft
Further dissemination only as directed by Commandant (CG-937) or higher Coast Guard authority.

Section A. Operating Parameters

Introduction

The readiness of the 45FT RB-M boats shall be continuously monitored to ensure that the boat is capable of unrestricted operations. This monitoring is accomplished through a variety of formal and informal inspection programs including daily boat checks, the boat PMS schedule, annual engineering inspections, Ready For Operation (RFO) evaluations, and Standardization Team Assessments. Whenever a discrepancy is noted during any of these inspection programs. It must be classified and acted upon based on the following standards.

Disabling Casualties

Disabling casualties are those that make the 45FT RB-M not serviceable.

Appendix C contains a listing of disabling casualties.

Actions (underway)

In the event the 45FT RB-M sustains a disabling casualty while underway, the 45FT RB-M shall immediately return to the nearest safe mooring, if able, and immediately be placed into “Charlie” status. In many cases, the 45FT RB-M will require assistance from another vessel.

Actions (dockside)

If a disabling casualty is identified while the 45FT RB-M is moored, the 45FT RB-M is not authorized to get underway until the casualty is corrected. The 45FT RB-M shall immediately be placed into “Charlie” status and repaired. Dockside materiel inspections may continue after discovery of a disabling casualty, but the 45FT RB-M shall not get underway for full power trial or underway exercises until all disabling casualties are fully repaired.

NOTE

Operational Commanders may authorize, in writing, the movement of the 45FT RB-M for short distances under its own power only to facilitate haul-outs or corrective maintenance. This authority may be delegated, but must remain higher than the unit CO/OIC.

Draft
Further dissemination only as directed by Commandant (CG-937) or higher Coast Guard authority.

Reports

Disabling casualties shall be reported to the Operational Commander by the most expeditious means, followed up by a boat status message as soon as possible, but no later than 12 hours after the casualty is discovered. If the casualty cannot be repaired within 48 hours, a CASREP shall be sent within 24 hours of discovery of the casualty in accordance with Casualty Reporting (CASREP) Procedures Manual, COMDTINST M3501.3 (series). Operational Commanders are responsible for monitoring the status of repairs to disabling casualties.

Restrictive Discrepancies

Restrictive discrepancies are those which restrict the operations of the 45FT RB-M such that it can perform some missions, but not all missions safely. 45FT RB-Ms with restrictive discrepancies shall only be operated if the Operational Commander has issued a written waiver. A verbal waiver is authorized as long as it is followed with a written waiver within 4 hours. The ultimate authority for 45FT RB-M waivers resides with the Sector or Group–Air Station Commander, but may be delegated to the Response/Operations Department Head.

Appendix D contains a listing of restrictive discrepancies.

NOTE

A written waiver may be a letter, memorandum, e-mail, or record message traffic. The written waiver shall: (1) identify the specific discrepancy which is waived, (2) describe the conditions under which the 45FT RB-M may be operated, and (3) concur on the measures to be taken to lessen or negate the hazard posed by the discrepancy. Written waivers shall be maintained as an annotation to Part 3 of the 45FT RB-M record.

Actions (underway)

In the event the 45FT RB-M sustains a restrictive discrepancy while underway, the coxswain shall immediately notify the parent unit with all pertinent information and a recommendation whether to continue or abort the mission. The parent unit shall pass along the information pertaining to the casualty, the current mission, and recommendations to the Operational Commander who shall immediately notify the

Draft
Further dissemination only as directed by Commandant (CG-937) or higher Coast Guard authority.

unit as to whether or not continuing the mission is authorized, the conditions under which the 45FT RB-M may be operated, and precautions to be taken to lessen the hazards posed by the discrepancy.

Actions (dockside)

The 45FT RB-M shall not get underway until the discrepancy is corrected or a waiver has been received. Dockside materiel inspections may continue after discovery of a restrictive discrepancy, but the 45FT RB-M shall not get underway for full power trial or underway exercises until all restrictive discrepancies are fully repaired or have been waived by the Operational Commander.

Reports

Restrictive discrepancies shall be reported to the Operational Commander if the discrepancy cannot be repaired within 1 hour. If the casualty cannot be repaired within 48 hours, a CASREP shall be sent within 24 hours of discovery of the casualty in accordance with Casualty Reporting (CASREP) Procedures Manual, COMDTINST M3501.3 (series). Operational Commanders are responsible for monitoring the status of repairs to all restrictive discrepancies.

Major Discrepancies

Major discrepancies are those that degrade the effectiveness of the boat to perform one or more missions. The occurrence of major discrepancies shall be documented, and a plan to correct these discrepancies shall be formulated and carried out by the unit. Operational Commanders are responsible for monitoring the status of the repairs to major discrepancies. It is suggested that, in conjunction with unit materiel inspections, Operational Commanders receive monthly reports as to the status of correction of major discrepancies.

Appendix E contains a listing of major discrepancies.

Minor Discrepancies

Minor discrepancies do not affect the operational readiness of the boat. However, a boat with minor discrepancies does not meet the standardization criteria as established for that boat. The occurrence and repair of minor discrepancies shall be documented and monitored at the station/unit level.

In the event that the addition of portable equipment, not part of the standard boat outfit, is necessary to meet mission needs, units are authorized to temporarily carry this extra equipment. This authorization is on a case by case basis only, and care

Draft
Further dissemination only as directed by Commandant (CG-937) or higher Coast Guard authority.

must be taken to properly secure any extra gear and to ensure it does not interfere with safe egress or the boat's standard outfit/systems. Under no circumstances shall permanent alterations be made to power, stow, or in any way accommodate extra equipment.

Environmental Limits

The 45' RB-M is built to operate safely under heavy weather conditions within its design limits. With approval from the Operational Commander, crews may operate the boat in conditions that exceed the environmental limits; however, the coxswain is ultimately responsible and must always make the final determination whether the boat and crew can safely perform the mission. The environmental limits for the RB-M are:

- 8' Seas
- 30 knots sustained winds
- 100°F to 0°F ambient temperature range
- 95°F to 28°F sea water temperature range
- Fully operable in fog, snow, heavy rain, and slush ice.

NOTE

These limits may be exceeded by approval from the group commander, ONLY after appropriate risk assessment for the situation at hand is made. On-scene conditions provided by the on-scene commander and RB-M coxswain must be considered in the risk assessment process. The coxswain retains the final on-scene decision as to whether or not an action may be safely executed.

Survivability

As a multi-mission Coast Guard asset, the RB-M is required to perform in a wide range of conditions. While every effort should be made to ensure the RB-M operates within its designated Mission Capable limits as shown in Figure 044 1, there will be times when the RB-M is forced outside these limits through the unpredictability of weather, rapidly changing sea conditions, hostile intent of others, system or component failures and human error. Accordingly the RB-M provides a level of

Draft
Further dissemination only as directed by Commandant (CG-937) or higher Coast Guard authority.

survivability beyond the required Mission Capable limits to ensure the safety of the crew. The following conditions are factored in to the into the RB-M's survivability:

1. Extreme Seas and Winds: The RB-M has the capability to survive in extreme sea and wind conditions up to the Survivable limits shown in the below figure.
2. Flooding and Damage Control: The RB-M has the ability to survive flooding caused by component failure, hull damage or hostile fire. This is accomplished through the alarm and bilge systems to remove water and ultimately through enough reserve buoyancy, stability and compartment watertight integrity to withstand flooding of any single main compartment.
3. Fire: The RB-M has the capability to detect and suppress onboard fires.
4. Emergency Systems: The RB-M has the means to maintain radio communication, provide limited navigation using GPS, provide emergency and navigation lighting, and maintain propulsion control for at least four hours in the event the primary electrical power generation system.
5. Crew Egress: In the event of fire, capsize or other event that may cause the RB-M to be unsafe for the crew, the crew is able to safely and rapidly get out of all internal compartments, including machinery spaces, and as a last resort be prepared to leave the RB-M.
6. Shelter in Place: The RB-M is capable of providing minimal “shelter in place” protection to protect the crew from hazardous operating environments. This includes watertight doors and windows and the ability to completely seal off the ventilation system to manned spaces for limited amounts of time in emergency situations

Draft
Further dissemination only as directed by Commandant (CG-937) or higher Coast Guard authority.

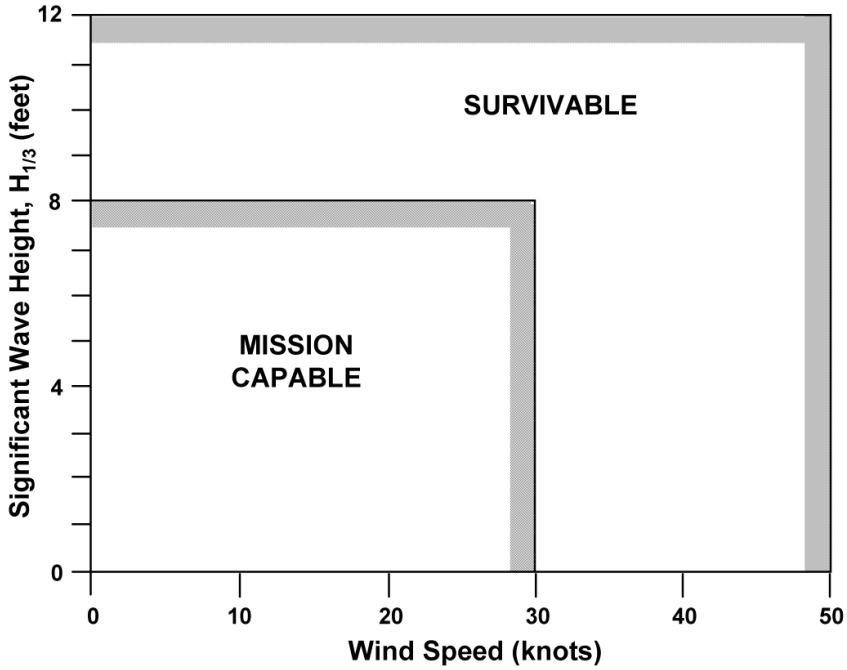

SEA STATE LIMITS

Figure 1

Draft
Further dissemination only as directed by Commandant (CG-937) or higher Coast Guard authority.

Section B. Performance Data

Fuel Consumption

Fuel consumption and operating range are affected by engine tuning, weather conditions, trim, type of evolution, and operating area. The RB-M is capable of operating a maximum of 250 NM at 30 knots with a normal load (full load of fuel, liquids in machinery at normal levels, crew of four). Fuel consumption at 2300 RPM (engine rated speed) and 45 knots is 46 GPH. Fuel consumption information will become available as operating hours accumulate on the RB-M.

WARNING

> The coxswain is responsible for ensuring that all required personal safety equipment is worn, and worn correctly.

Speed and Seakeeping

Positioning the vessel with respect to the wind, seas, and other craft is essential to prevent damage to the hull or injuries to the crew.

High Speed Operations

The RB-M provides a top speed of over 40 knots in calm water. This top speed is intended as a “sprint speed”. The RB-M was designed based on an assumption that this speed would only be used for 15% of the operating time, with the rest of the time the RB-M operating at the 30 knot cruising speed or below.

Speeds in excess of 30 knots shall ONLY be used for missions where high speed is absolutely necessary such as SAR missions involving the potential loss of life and MLE / PWCS missions requiring the high speed interception of Targets of Interest.

Speeds in excess of 30 knots may be used in training, but shall not constitute more than 15% of the training time, and all of the cautionary provisions of this section apply.

High speed operations increase the risk of injury to the crew and increases the risk of collision with other vessels, collision with objects and running aground.

Extended high speed operations will also increase the loads on the RB-M and its equipment reducing the service life and increasing required maintenance and repair.

Draft
Further dissemination only as directed by Commandant (CG-937) or higher Coast Guard authority.

When operating at high speeds, the coxswain's ability to focus on the helm and throttle controls of the RB-M is critical. Teamwork shall be used to make sure the coxswain can maintain this focus. The RB-M has several features that shall be used to facilitate this teamwork including the headset crew communications system and multiple navigation displays.

Crewmembers shall remain in a secure position during high speed operations. If possible, crew members should use the shock-mitigating seats and the seatbelts provided.

No one should move about the vessel at high speed without first notifying the coxswain and allowing the coxswain to slow the RB-M to a speed that will provide for improved safety.

High speed operations with passengers onboard should be avoided if possible. Passengers may not be familiar with the requirements to secure themselves during these operations, and the motions of the RB-M during these operations may be unpredictable and violent.

Both the AIS system and the DDEC systems can be used to verify that crews comply with the speed restrictions.

Turning

In turns at all speeds and loading conditions, the RB-M will maintain a steady turn rate without skidding. Inboard heel will be maintained throughout the turns. In coming out of a turn, the boat will respond to the steering command without the need for excessive force.

Stability

The RB-M is self-righting in all loading conditions, with or without the fendering. Positive righting arms are present at all values of heel from 0 to 180 degrees.

NOTE

Do not use rapid accelerations from dead-in-the-water (DIW) to full speed except when necessary. This conserves fuel and helps prolong engine life.

Draft
Further dissemination only as directed by Commandant (CG-937) or higher Coast Guard authority.

Section C. Performance Monitoring

Performance Monitoring

It is essential that the coxswain and crewmembers be aware of installed monitoring equipment, gauges, and warning indicators, to ensure safe and efficient operation of the RB-M propulsion and ancillary systems. Crewmembers should be aware of the "normal range" or indication of all gauges and indicators, and report and react accordingly when changes occur.

Electronic Display Modules (EDM)

There are four Electronic Display Modules (EDM) located in the Pilothouse for propulsion system monitoring. The EDMs are located in the following places:

1. Upper Center Console (2 EDMs)
2. Primary Control Console (2 EDMs)

At each console, there is an EDM for each engine/reduction gear set, providing normal monitoring for the following:

1. Engine RPM
2. Engine Jacket Water Temperature
3. Engine Oil Pressure
4. Engine Fuel Consumption
5. Reduction Gear Oil Temperature
6. Reduction Gear Oil Pressure
7. Battery Voltage
8. Reduction Gear Direction

The EDMs also provide alerts when abnormal conditions exist in the engine/ reduction gear set. When an alarm condition occurs, a CHECK or CHECK STOP will blink on the display along with the associated equipment/system (ENGINE and/ or TRANS). If there is a control system malfunction, or there is more than one alarm condition, CONTROL SYS or MULTIPLE will appear at the lower left corner of the display. If a permanently displayed item is affected, then the corresponding icon on the display will blink. ALARM CODE appears at the lower left corner of the display along with a word description of the alarm appears in the text window. The following alarms will provide a CHECK STOP indicator on the EDM and require immediate shutdown of the affected engine/reduction gear set:

Draft
Further dissemination only as directed by Commandant (CG-937) or higher Coast Guard authority.

1. High Engine Jacket Water Temperature
2. Low Engine Oil Pressure
3. High Reduction Gear Oil Temperature
4. Low Reduction Gear Oil Pressure
5. High Wet Exhaust Gas Temperature
6. High Dry Exhaust Gas Temperature

Each EDM also has a text window, providing the ability to monitor a selected item by scrolling through the selection menu.

LCD Alarm Display Panel

The LCD Alarm Display Panel is located in the Upper Center Console between the two EDM Displays. The LCD Alarm Display Panel provides the following:

1. Steering Nozzle position
2. Reversing Bucket position
3. Interceptor position
4. Control System fault
5. Engine/Reduction Gear fault
6. Central Alarm System fault

When an alarm occurs, the display will generate a fault page with the activated alarm. Button 1 is depressed to acknowledge the alarm.

Buzzer/ Alarm Indicator

There is an alarm buzzer and indicator mounted in the Upper Center Console above the LCD Alarm Display Panel. The alarm buzzer and indicator are connected directly to the Central Alarm System and provide audible and visual indicators when an abnormal condition exists. The LCD Alarm Display Panel will indicate which system/sensor has generated the alarm for investigation by the crew. Button 1 is depressed on the LCD Alarm Display Panel to silence the buzzer and place the indicator in steady state illumination (if the alarm condition still exists).

Fuel Tank Monitoring

Fuel tank monitoring is accomplished through a level gauge mounted on the Primary Crew Console that provides an indication of fuel level in the fuel tank.

Draft
Further dissemination only as directed by Commandant (CG-937) or higher Coast Guard authority.

Draft
Further dissemination only as directed by Commandant (CG-937) or higher Coast Guard authority.

Draft
Further dissemination only as directed by Commandant (CG-937) or higher Coast Guard authority.

Mission Performance Introduction

Introduction

The actions and techniques described in this chapter are intended to give boat crew members information on how the 45FT RB-M performs and reacts in various mission scenarios. The information is not intended to provide the “only way” to perform an action or complete a mission. Boat crews should use effective communications and teamwork skills along with this general information to adapt their actions to each unique mission scenario.

Information in this section alone does not qualify a crew member. Observe these procedures and apply skills developed through practice to effectively use the 45FT RB-M to perform missions.

This chapter contains the following sections:

- Starting Procedures
- Underway
- Handling Characteristics
- Heavy Weather
- Towing
- Anchoring
- Helicopter Operations
- Personnel Recovery
- Ice Conditions
- Securing Procedures

Draft
Further dissemination only as directed by Commandant (CG-937) or higher Coast Guard authority.

Draft
Further dissemination only as directed by Commandant (CG-937) or higher Coast Guard authority.

Section A. Starting Procedures

Introduction

The RB-M Mission demands that the boat be in a ready to use condition at all times. All RB-M systems must be checked daily to ensure that they are in a 100% available condition.

System checks for RB-M missions include the following:

- Mission Pre-Start
- Engine Pre-Start
- Engine Start
- Control Station Test
- Energizing Equipment

Draft
Further dissemination only as directed by Commandant (CG-937) or higher Coast Guard authority.

Draft
Further dissemination only as directed by Commandant (CG-937) or higher Coast Guard authority.

Section A.1. Mission Pre-Start

Mission Pre-Start

The following pre-start checks must be accomplished before the first mission of the day.

NOTE

The following steps are written based on Battery Switches #1 and #2 are in the "ON" position.

Step	Action
1	Inspect bilges for excessive amounts of water. Look for signs of spilled fuels or oil. Pump and clean as necessary.
2	Inspect for debris and unstowed/improperly stowed gear. Clean as necessary and stow all gear properly.
3	Inspect Main Engine Duplex Seawater Strainers and ensure baskets are free of debris. Ensure one basket for each strainer is aligned for operation.
4	Inspect HVAC Seawater Suction Strainer and ensure basket is free of debris.
5	Inspect all seawater hoses and connections for leakage, cracks, and corrosion.
6	Inspect jet pump hydraulic hoses and connections for leakage, cracks, and corrosion.
7	Open Main Engine Seawater Supply Valves.
8	Open HVAC Cooling Pump Seawater Supply Valve.
9	Open Sea Chest De-Icing Valves, when operations in slush ice or freezing conditions are expected.
10	Ensure area around Main Engine air intakes and space vent louvers are clear.
11	Ensure muffler drain valves are closed and exhaust connections are secure.
12	Inspect Windshield Wipers for abrasions and cracks.
13	Ensure anchor is secure in hold-down bracket.

Draft
Further dissemination only as directed by Commandant (CG-937) or higher Coast Guard authority.

Step	Action
14	Ensure dock lines are in good condition and boat is moored appropriately for the weather conditions.
15	Ensure all deck equipment is stowed properly.
16	Check Fuel Level. Ensure fuel level is maintained at 95% (445 gallons).
17	Check Windshield Washer Fluid level and top off, if required.
18	Check function of bilge alarms by lifting each bilge alarm switch. • Lazarette • Engine Room • Port Auxiliary Machinery Compartment • Starboard Auxiliary Machinery Compartment • Survivors' Compartment • Forepeak

Securing Shore Power

Step	Action
1	Rotate the AC Bus 1 and AC Bus 2 Transfer Switches to the “OFF” position in the Pilothouse.
2	Turn the shore power breaker at the pier off, disconnect, retrieve and stow the shore power cable.
3	Position the ship's service bus transfer switches (2) to the "Generator" positions.
4	Start engines IAW the Daily Boat Check.
5	Close (turn on) all of the remaining circuit breakers on the AC and DC Power Panels (as required).

Draft
Further dissemination only as directed by Commandant (CG-937) or higher Coast Guard authority.

Section A.2. Engine Pre-Start

Engine Pre-Start

The following pre-start checks must be accomplished prior to engine start:

Step	Action
1	Check the following fluid levels: • Engine Oil Level • Engine Coolant Level • Reduction Gear Oil Level • Hydraulic Tank Oil Level • Waterjet Oil Level
2	Check all belts for proper tension.
3	Check Fuel Filter/Separator for presence of contamination. Drain/Clean as required.
4	Ensure fuel supply valves from fuel tank are open.
5	Energize DDEC primary and backup breakers at the 24VDC power panels.
6	Energize Kamewa primary and backup breakers at the 24VDC power panels. Ensure Vector Sticks are at the center detent position on both control stations.
7	Ensure Vector Sticks are at the center detent position on both control stations.
8	Select Docking Mode on the Vector Stick Control Panel.
9	Verify the Steering Nozzle Position Indicator is in the center position.
10	Verify/Place the Engineroom Exhaust Fan Control Switch in the AUTO or MANUAL position.

Draft
Further dissemination only as directed by Commandant (CG-937) or higher Coast Guard authority.

Draft
Further dissemination only as directed by Commandant (CG-937) or higher Coast Guard authority.

Section A.3. Engine Starting

Engine Start

The following checks must be accomplished for engine start:

Step	Action
1	Ensure reduction gear clutch status “DISENG” is illuminated at both control stations.
2	Ensure both AURAGEN Control Switches are in the “OFF” position.
3	Open the Main Shore Power Disconnect Breaker on the 240P1 Power Panel.
4	Secure the Shore Power Breaker on the dock. Disconnect and stow the shore power cable.
5	Rotate the Bus 1 Transfer Switch to the “GEN 1” position. Rotate the Bus 2 Transfer Switch to the GEN 2” position.
6	Depress the Port Engine Start Button until the engine starts.
7	**CAUTION !** If engine does not start within 15 seconds, secure cranking engine and investigate cause. Depress the Starboard Engine Start Button until the engine starts.
8	**CAUTION !** If engine does not start within 15 seconds, secure cranking engine and investigate cause. Ensure raw water flow through the engines by observing engine exhaust discharge.
9	**CAUTION !** If cooling water output is not evident, immediately secure engine and investigate.

Draft
Further dissemination only as directed by Commandant (CG-937) or higher Coast Guard authority.

Step	Action
	Visually monitor control panels for proper operation and operating ranges.
10	Visually check for fluid leaks and loose connections.
11	Place both Pilothouse AURAGEN Control Switches in the “ON” position.
12	Verify operation of Engineroom Exhaust Fans.

Draft
Further dissemination only as directed by Commandant (CG-937) or higher Coast Guard authority.

Section A.4. Control Station Test

Control station transfer

Transferring control from one operating station to another is achieved by actuating the indicating push button on the station taking control. In order to prevent a significant change in the vessel's speed and directions of thrust, an interlock prevents the system from transferring from one station to another unless the following conditions are satisfied: 1.) the position of the joystick levers at each station are matched (centered in the detent position), 2) the position of the helms are matched.

Step	Action
1	Place both joysticks and steering tillers in their center detent positions.
2	Quickly press the indicating push button twice (that is, double-click) at the station taking control.
3	Please note the status of the LED on the station taking control (see).
4	If the positions of the levers and joystick are within 10% of each other, the transfer takes place immediately, and the LED provides the appropriate status as listed in .

NOTE

If, while a station is in control, a fault occurs with one of the joystick or tiller position sensors, the joystick/tiller matching position interlock is inhibited and transfer may be taken from the faulty station without the levers matching. In addition, the control system inhibits station transfer from taking place if there is a lever/ joystick position sensor error at the station requesting control. In this instance, the LED at the station requesting control ceases to flash (after control has been requested) after approximately 10 seconds and the transfer request "times out".

Transfer Button LED Status

Draft
Further dissemination only as directed by Commandant (CG-937) or higher Coast Guard authority.

Transfer button LED status	Indication
Not illuminated	Station not in control
Flashing quickly (0.5 sec intervals)	Control transfer pending
Illuminated steady	Station in control

Draft
Further dissemination only as directed by Commandant (CG-937) or higher Coast Guard authority.

Section A.5. Energizing Equipment

Energizing Equipment

The following steps must be completed prior to getting underway:

Step	Action
1	Turn the shore power breaker at the pier off, disconnect, retrieve and stow the shore power cable.
2	Position the ship's service bus transfer switches (2) to the "Generator" positions.
3	Start engines IAW the Daily Boat Check.
4	Close (turn on) all of the remaining circuit breakers on the AC and DC Power Panels (as required).
5	Energize and test all communications gear.
6	Energize and test all lighting systems.
7	Energize and test all HVAC/Heating Systems (as required).
8	Ensure gear is properly stowed and watertight integrity is set.
9	Inform coxswain on the status of all engineering and electronic systems and that the boat is ready to get underway.

Draft
Further dissemination only as directed by Commandant (CG-937) or higher Coast Guard authority.

Draft
Further dissemination only as directed by Commandant (CG-937) or higher Coast Guard authority.

Section B. Underway

Introduction

It is the responsibility of the coxswain and crewmembers to ensure that once the vessel is underway the boat and its systems are operated in a safe and efficient manner. The safety of the crew and any embarked personnel is also incumbent on all crewmembers.

After getting underway, observe all appropriate machinery monitoring devices. If an abnormal condition develops, take corrective action to prevent further damage, in accordance with the U.S. Coast Guard Boat Operations and Training (BOAT) Manual, Vol. I, COMDTINST M16114.32 (series). Report any abnormal conditions to the coxswain.

Personal Protective Gear

Always observe requirements of this manual, the Rescue and Survival Systems Manual, COMDTINST M10470.10 (series), and the Boat Crew Seamanship Manual, COMDTINST M16114.5 (series), for wearing protective clothing, personal flotation devices, and boat crew signal kits.

Communications

Crew communications and coordination is the key to safe operations. Crewmembers should inform the coxswain of their location when moving about the deck. Engine noise can make crew communications difficult on RB-M Class boats. Speak loudly and clearly, repeating as necessary until acknowledged. Crew members should utilize the Crew Communication System whenever possible.

NOTE

When operating the boat with minimal crew, effective crew communications are critical. Speak loud enough to be heard over the background noise. Ensure the receiver hears and understands the message being passed. A common strategy is to have the receiver repeat back the message that was sent.

Draft
Further dissemination only as directed by Commandant (CG-937) or higher Coast Guard authority.

NOTE

The enclosed steering station can create a sense of isolation from the elements and other marine traffic. Crewmembers should use all available means to maintain awareness of wave action, winds, currents, and traffic.

Effective communication is a priority for the crew prior to getting underway (GAR Model), coming up on plane, turns - no matter how slight, coming down off plane, and emergency stopping. The crew is responsible for additional crewmembers without communications headsets and guests onboard the RB-M when underway.

Draft
Further dissemination only as directed by Commandant (CG-937) or higher Coast Guard authority.

Section C. Handling Characteristics

Introduction

Boat handling is a complex skill that requires knowledge and practical, underway experience to build confidence and skill level. Always use forethought and finesse when handling the boat. Know the boat's handling features, monitor weather conditions, and be aware of the operating limitations of the boat.

This section contains the following information:

- Turning and Pivoting
- Head Seas
- Beam Seas, Following Seas, and Quartering the Seas
- Effects of Wind
- Station Keeping

Draft
Further dissemination only as directed by Commandant (CG-937) or higher Coast Guard authority.

Draft
Further dissemination only as directed by Commandant (CG-937) or higher Coast Guard authority.

Section C.1 Maneuvering

Operating the Boat

Operating the boat with water jet units is different from operating a boat with propellers.

Maneuvering the Vessel

The vector stick control system has been designed so that all maneuvers, both high speed transiting and docking, can be executed intuitively.

Cruising/Transiting

In transit mode, imparting forward and aft thrust to the vessel is accomplished via the joystick. When cruising above 5 knots while using the joystick, it should be locked in the transit mode position (**(Refer to Figure 1)**). When locked in this position, the joystick is only allowed to move in the fore-aft direction (along the Y axis), and reversing buckets and engine RPM are controlled together (that is, the bucket position and engine RPM are kept the same between port and stbd water jets). For joystick operation, a programmed relationship between the bucket position and RPM is implemented such that the lever position is proportional to the thrust imparted to the vessel. When ordering a thrust magnitude with the lever, the system simultaneously generates a main engine RPM command and a reversing bucket command.

Draft
Further dissemination only as directed by Commandant (CG-937) or higher Coast Guard authority.

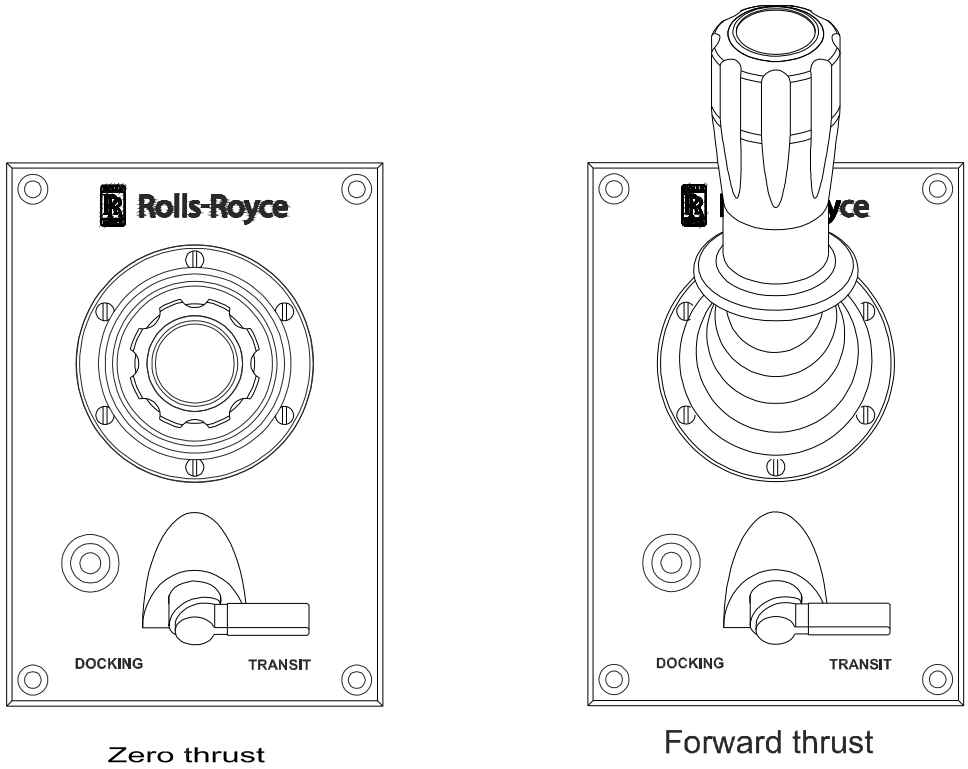

TRANSIT MODE — JOYSTICK POSITIONS

Figure 1

When the joystick is in its center detent position, the engines are set at idle and reversing buckets are set to a position (neutral bucket) giving equal ahead and astern thrust, resulting in zero thrust.

Steering of the craft is accomplished by rotating the steering nozzles from side to side. Steering nozzles and hence the craft heading are controlled by movement of the electronic tiller.

When transferring from docking mode to transit mode, the joystick must be placed in the center detent position and the mode selection button must be pressed. When the mode status LED changes from flashing to solid, the system is in transit mode.

Integrated Interceptor Steering

When the vessel is underway at cruising speed in transit mode, the control system deploys the interceptors to assist in the steering of the vessel. When steering to stbd, the stbd interceptor deploys downward and the port Interceptor retracts upward.

Draft
Further dissemination only as directed by Commandant (CG-937) or higher Coast Guard authority.

Likewise, the port interceptor deploys downward when steering to port, while the stbd interceptor retracts upward. During the control system commissioning, calibration of the integrated interceptor steering parameters is undertaken to optimize the performance characteristics for the application.

Under the following conditions, the position of the interceptors is not influenced by the helm:

1. Operating at slow speed.
2. Operating the vessel in docking mode.

Maneuvering/Docking

When maneuvering at slow speeds or docking, the control system should be transferred to docking mode (see **(Refer to Figure 2)**). In this mode, the joystick is allowed to move freely along the X and Y axes, and steering nozzles, reversing buckets and engine RPM are individually controlled such that a net thrust is imposed at the vessel centroid at a magnitude and direction that corresponds to the joystick position.

To enter the docking mode, first bring the joystick to its center position and then rotate the locking switch to “docking” position.

NOTE

A safety interlock prevents the system from entering the docking mode if the joystick is not in the center position.

In the docking mode, the vessel translation is controlled by the joystick position along the X and Y-axes, and the turning moment is controlled with the helm/tiller, similarly to steering maneuvers in transit mode.

Once the X-axis locking mechanism is released and the joystick is moved out of the center X-axis position (sideways), the system automatically transfers from transit mode to docking mode. When in docking mode, the green status LED flashes slowly at 1 second intervals.

Draft
Further dissemination only as directed by Commandant (CG-937) or higher Coast Guard authority.

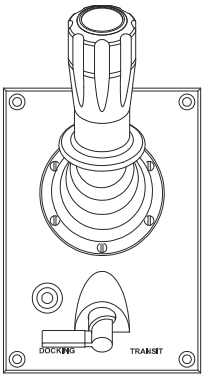

DOCKING MODE — THRUST AHEAD

Figure 2

Draft
Further dissemination only as directed by Commandant (CG-937) or higher Coast Guard authority.

CAUTION !

The operation and functionality of the second station joystick is the same as with the primary operating station; the only difference being that there is no locking mechanism to inhibit sideways motion of the joystick when operating in transit mode. The locking mechanism is not provided for installations which are exposed to the weather, as it is not protected against moisture penetration. As indicated above, a safety interlock prevents the system from entering docking mode if the joystick is not the center position. For example, if the joystick is at any point along the Y-axis (fore/aft) and the joystick lever is moved sideways, the system does not enter the docking mode.

If while in docking mode, a) either of the outboard clutches is disengaged, or b) a fault exists with any reversing bucket or steering nozzle sensor, the following takes place:

1. A control system alarm output is generated.
2. The LCD display indicates the applicable fault.
3. Sideways vessel translation is inhibited (x-axis movement of the joystick will have no effect on thrust imparted to the vessel), while fore/aft movement of the joystick remains functioning normally (that is, fore/aft thrust imparted to the vessel is proportional to handle position).

Alongship Movements

Alongship movements are obtained by moving the joystick lever ahead/astern (direction 0° or 180°R). There is a relationship between the reversing buckets and engine RPM. The thrust generated is dependent on the magnitude of the joystick lever movement. For small lever movements the system works only with the position

Draft
Further dissemination only as directed by Commandant (CG-937) or higher Coast Guard authority.

of the reversing buckets, but if more thrust is ordered, the engine speed increases as well.

Transverse Movement

Transverse movement of the vessel is achieved by moving the joystick in the direction of desired thrust. The thrust generated is dependant on the magnitude of the joystick lever movement (direction 90°-thrust to port, see **(Refer to Figure 3)**). In order to develop a pure translational force (no rotation), each water jet is placed in its optimum position (determined during calibration) and operated to achieve the desired transverse motion. Changes in magnitude and direction are controlled by varying the bucket position and engine RPM of each water jet.

To compensate for alongship forces/movements imposed by outside forces such as wind and currents, the joystick can be moved slightly in the direction opposite of the disturbance. Accordingly, any unwanted rotational disturbances can be compensated for by movement of the electronic tiller.

Draft
Further dissemination only as directed by Commandant (CG-937) or higher Coast Guard authority.

DOCKING MODE — THRUST TO PORT

Figure 3

Rotation

In all conditions, rotation is controlled through movement of the electronic steering tiller. Whether thrusting ahead, astern or transversely, adding or subtracting small amounts of steering nozzle motion superimposes a small turning moment. The additional nozzle displacement is increased as the required moment increases. Pure rotation is obtained by maintaining the reversing buckets at the neutral position and turning the nozzles. In both transit and docking modes, this is accomplished by movement of the steering tiller with the joystick at its neutral thrust position. Small tiller adjustments translate to small heading changes, and large adjustments translate to large heading changes.

Draft
Further dissemination only as directed by Commandant (CG-937) or higher Coast Guard authority.

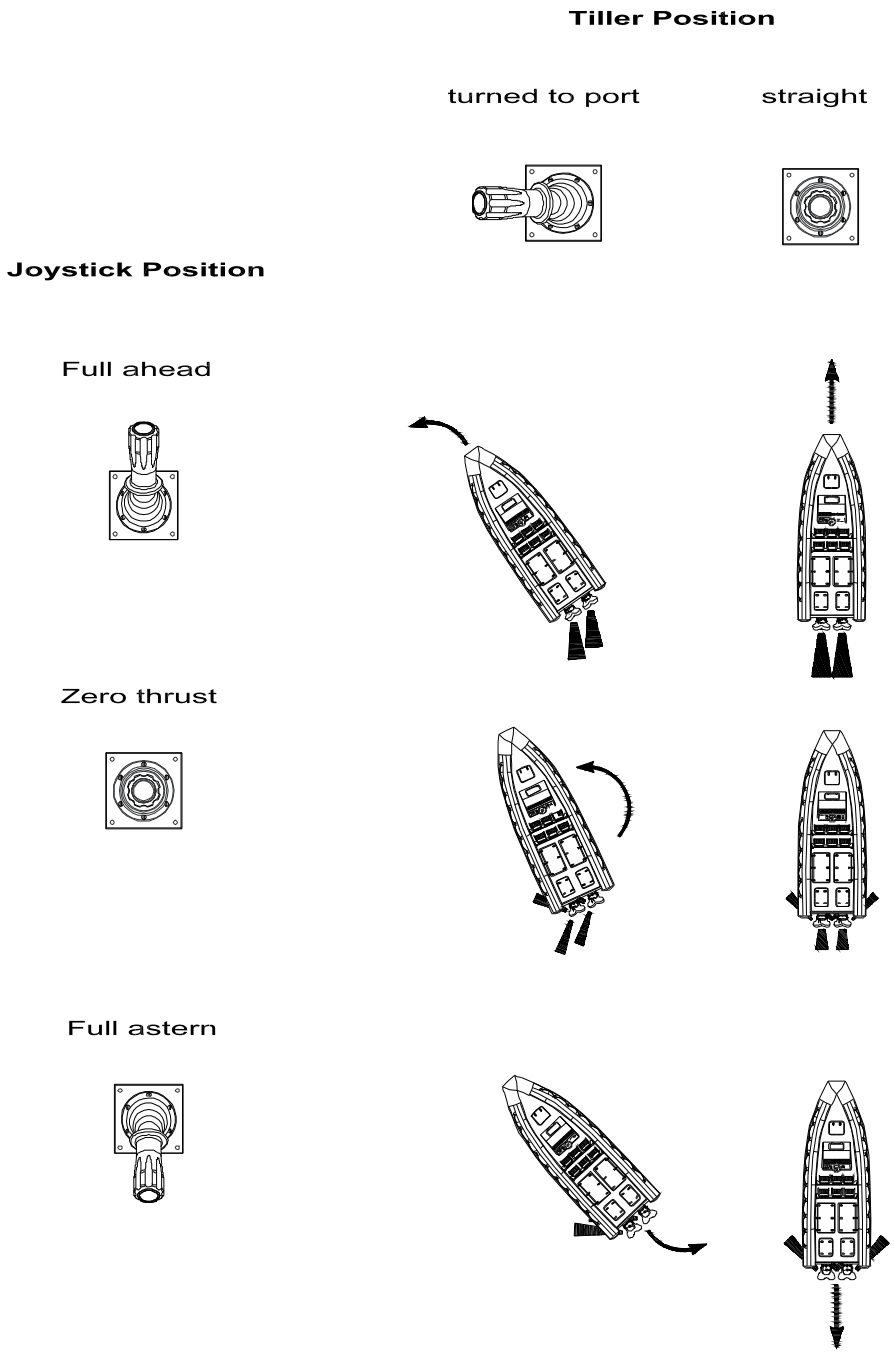

RB-M MANEUVERS

Figure 4

Draft
Further dissemination only as directed by Commandant (CG-937) or higher Coast Guard authority.

Stopping

Stopping is very different from braking with a propeller boat. Using the reversing bucket, which can be maneuvered from full ahead to full astern in 3 seconds, it is possible to apply astern thrust at the beginning of the stopping sequence while the boat still is travelling ahead. This will give a shorter stopping distance, but also very high stopping force which has to be considered in order to avoid personnel injury and material damage. Emergency stoppping should therefore only be used when necessary.

Emergency Stopping

1. Set the lever to full astern.
2. Maintain full astern position until the boat has slowed down (almost stopped).
3. Gradually decrease the thrust, so that zero thrust is ordered when the boat has stopped.

While stopping, the steering characteristics of the boat is changed and the boat becomes much more sensitive to joystick movements. Therefore it is not recommended to steer the boat except for keeping the course.

WARNING ✋

Never perform an emergency stopping procedure before communicating to the crew. The forces involved in emergency stopping can cause personnel injury and material damage.

When emergency stopping is not necessary a regular stopping of the boat should be performed.

Slowing down and stopping

1. Gradually decrease the RPM until the boat has slowed down.
2. When the boat has reached low speed, set the levers in zero thrust position.
3. If necessary, order a little astern thrust until the boat has stopped.

Draft
Further dissemination only as directed by Commandant (CG-937) or higher Coast Guard authority.

Draft
Further dissemination only as directed by Commandant (CG-937) or higher Coast Guard authority.

Section C.2 Turning and Pivoting

Characteristics

The RB-M turns or pivots, for steering purposes, on its vertical axis, at approximately the aft cabin bulkhead when fully trimmed in. Because of this characteristic (which provides other benefits such as straight-line tracking and planing), coxswains must be aware of the boat's turning capabilities.

WARNING

High-speed turns while improperly trimmed, may result in injury to crew or damage to the boat.

Turning on Plane

Avoid making high speed turns or turning on plane without communicating to the crew you are turning, ineffective communication can result in personal injuries.

High speed turns or turns on plane reduces the amount of wetted surface (hull in the water), sharp turns in conjunction with weather conditions and joystick operations can result in hooking the chine causing the boat to chine walk from side to side. Chine walking at high speed can be a violent movement of the boat from side to side; the counter action to recover from chine walking is reducing your speed but NOT pulling the power off called "Chopping Power."

In joystick operations during high speed turns the slightest movement in the joystick can cause the boat to hook a chine, this is not created by the boat but by the Operator. The Operator must take into account weather/sea conditions and speed prior to making the high speed or turn on plane. The inability to read swells during turns can cause the boat to "Trip," causing the boat to release from the wave and crashing onto the side of the boat in a violent manner. When the boat "trips" the boat will kick free of the wave causing a violent re-entry back into the water possibly causing damage to the boat and personal injury if the crew is not prepared for the turn. It is very important to work with the wave to make turns with the RB-M. The Operator needs to keep aware of their surroundings, for example when approaching boat wakes, refracted waves from break walls or islands when planning their turn. Keep in mind that turns can happen in seconds so keeping situation awareness is important.

Draft
Further dissemination only as directed by Commandant (CG-937) or higher Coast Guard authority.

CAUTION !

High speed turning on plane shall not be done when persons are out on deck or additional crewmembers are underway and not seated.

Heavy Weather Boat Operations

The coxswain's boat handling proficiency, knowledge of handling characteristics of the RB-M and utilizing skills in reading weather/sea conditions must be part of protecting the beam of the RB-M. During high speed or turns on plane the RB-M will layover going into the turn exposing the planning strake and aft fin to the next oncoming swell. Exposing the hull plate, planning strake and fin in the turn creates a flat surface that can be struck by the force of the swell, wind swept wave or sea break, resulting in the RB-M to be laid over to 90 degrees or rolling.

Draft
Further dissemination only as directed by Commandant (CG-937) or higher Coast Guard authority.

Section C.3. Head Seas

Introduction

The primary considerations when advancing in head seas are to maintain forward momentum and keep the bow into the swell. The sturdy and buoyant construction of the boat allows it to ride up over oncoming seas.

Speed

The boat rides well at full speed in open head seas up to 6'. Head seas over 6' may require that the speed be reduced, as necessary, to soften the ride. Increased sea states may dictate further speed reductions for the benefit of crew safety. Relatively smaller, but steeper seas (steep chop) may require that the speed be reduced in lesser sea states. Large open ocean ground swells typically pose no problem, however, and speeds can be increased and adjusted to accommodate crew comfort. The coxswain must find a safe and comfortable speed, keep both waterjets in the water, and avoid burying the bow in a wave.

WARNING

> In large and cresting head seas, apply only enough power to climb face of wave. Excessive power can cause the boat to become airborne as it exits the wave, resulting in a violent slam.

Quartering the Seas

Taking larger head seas slightly off of either bow can create a more comfortable ride, as the boat may proceed more gently off the back of the wave instead of slamming violently. The speed and angle of approach will have to be adjusted as needed for the optimum ride. This is sometimes referred to as quartering the seas, which is not to be confused with taking a following sea on the quarter.

Draft
Further dissemination only as directed by Commandant (CG-937) or higher Coast Guard authority.

Draft
Further dissemination only as directed by Commandant (CG-937) or higher Coast Guard authority.

Section C.4. Stern to Seas

Introduction

Following open seas up to 10' can be negotiated at planning speed as long as the boat remains stable as it travels down the front of the swell. Following planing seas over 10' may require a reduction in speed to maintain stability and avoid injury to the crew.

WARNING

While operating the 45FT RB-M stern to the seas >8' and RPMs >1800, the boat is prone to being **caught on the hardchine**. Being **caught on the hardchine** is best described as the boat suddenly heeling over 50-80 degrees on a false keel. The coxswain's corrective action shall be to immediately reduce power to return the boat onto the true keel.

Riding the Back of a Wave

Inbound in breaking large waves, position the boat on the back of a wave and adjust the speed so the boat will ride in on the back of the wave. While riding on the back of a wave in heavy weather, monitor the boat's speed closely to avoid overtaking the wave as its speed toward shore decreases.

WARNING

The 45FT RB-M's speed often allows the coxswain to position the boat on the back of an incoming wave. Take care not to position the boat too high on the back of the wave as this is the part of the wave that quickly gains speed and plunges as it breaks. If the boat is too high or too fast, the boat may go over the face of the wave as it breaks.

Draft
Further dissemination only as directed by Commandant (CG-937) or higher Coast Guard authority.

WARNING

Despite its speed, it is possible for the 45FT RB-M to be overtaken by waves under certain conditions. Pay close attention to wave activity astern of the boat when proceeding inbound on breaking waves.

Draft
Further dissemination only as directed by Commandant (CG-937) or higher Coast Guard authority.

Section C.5. Beam Seas

Steering	Whenever possible, the coxswain should avoid steering a course parallel (broadside) to heavy swells. Tack across the swells at an angle (30 to 40 degrees). If necessary, steer a zigzag course, making each leg as long as possible, and adjust the boat speed for a safe and comfortable ride. Seas directly off the beam of the boat can cause adverse rolling conditions. When transiting parallel to the seas, the boat will tend to ride the contour of the wave surface. This means that the boat's vertical axis will remain perpendicular to the surface on which the boat is operated. A wave face of 20 degrees will cause a 20-degree heel.
Beam Seas	Whenever possible, the coxswain should avoid steering a course parallel (broadside) to heavy swells. Tack across the swells at a 30- to 40-degree angle. If necessary, steer a zigzag course, making each leg as long as possible, and adjust the boat speed for a safe and comfortable ride. Seas directly off the beam of the boat can cause adverse rolling conditions. When transiting parallel to the seas, the boat will tend to ride the contour of the wave surface. This means that the boat's vertical axis will remain perpendicular to the surface on which the boat is operated. A wave face of 20 degrees will cause a 20-degree heel.

Draft
Further dissemination only as directed by Commandant (CG-937) or higher Coast Guard authority.

Draft
Further dissemination only as directed by Commandant (CG-937) or higher Coast Guard authority.

Section C.6. Following Seas

Following Seas	Following open seas up to 6 feet can be negotiated at full speed as long as the boat remains stable as it travels down the front of the swell. In bad weather, RB-M Class boats are relatively safe running before the sea due to their speed. If caught in breaking seas, this advantage is used to ride the back of the waves while adjusting speed as required.

Draft
Further dissemination only as directed by Commandant (CG-937) or higher Coast Guard authority.

Draft
Further dissemination only as directed by Commandant (CG-937) or higher Coast Guard authority.

Section C.7. Effects of the Wind

Maneuverability

In calm or negligible wind and seas, RB-M Class boats respond well. In stiff winds, several design features combine to make handling this boat challenging. With the majority of weight and the deepest draft aft, the bow is very susceptible to the effects of the wind. Moderate winds may have an effect on maneuverability and can often be the predominant environmental factor in maneuvering situations. In some cases, it can be difficult to recover and turn the bow into the wind at slow speeds.

Draft
Further dissemination only as directed by Commandant (CG-937) or higher Coast Guard authority.

Draft
Further dissemination only as directed by Commandant (CG-937) or higher Coast Guard authority.

Section C.8. Station Keeping

Stern-To

Station keeping requires concentration to maintain a constant heading and position. The boat tends to work well with its stern to the wind as the bow tends to “weathervane” downwind. If stern-to station keeping is not an option, the operator must use extra care to counteract the effects of wind and current.

Draft
Further dissemination only as directed by Commandant (CG-937) or higher Coast Guard authority.

Draft
Further dissemination only as directed by Commandant (CG-937) or higher Coast Guard authority.

Section C.9. Operating in Shallow Water

Operating in Shallow Water

Avoid driving at high engine speed in shallow waters especially when reversing since the jet of water will move up sand etc. from the bottom, therefore sand and stones can be sucked through the water jet unit. This may cause wear to the impeller and guide vane chamber.

Do not accelerate heavily in shallow waters. Stones and sand etc. may be sucked into the water jet unit and cause wear to the impeller and the guide vane chamber.

Drive at idling speed until deeper water is reached. If a foreign object is sucked into the inlet duct, refer to Section B.9. Fouled Waterjet.

Draft
Further dissemination only as directed by Commandant (CG-937) or higher Coast Guard authority.

Draft
Further dissemination only as directed by Commandant (CG-937) or higher Coast Guard authority.

Section D. Going Alongside Vessels of Interest

The following is a generic procedure for going alongside. RB-M Class boat crews must be familiar with the applicable U.S. Coast Guard instructions and Standard Operating Procedures (SOP) for going alongside a vessel of interest and shall be accomplished in accordance with the Boat Crew Seamanship Manual, COMDTINST M16114.5 (series), Chapter 10 and the Response Boat Tactics, Technique and Procedures (RB-TTP) Manual, COMDTINST M16601.7.

Step	Action
1	Ensure that communications between the RB-M Class boat and the Operational Commander are established and reliable.
2	Attempt to make and establish contact with the vessel of interest on designated marine band frequencies.
3	Make approach preparations and inform the crew. The coxswain should determine where to make contact with the vessel.
4	**WARNING** Pick a contact point well clear of a larger vessel's propeller (including in the area of suction screw current), rudder, and quarter wave. Forces from these could cause loss of control. Conditions permitting, match your speed to the other vessel, and then start closing in from the side.
5	**NOTE** If your initial heading was parallel to the other vessel, you will have to increase speed slightly when you start to close at an angle.

Draft
Further dissemination only as directed by Commandant (CG-937) or higher Coast Guard authority.

Step	Action
	Close at a 15- to 30-degree angle to the other vessel's heading. This should provide a safe rate of lateral closure at no more than one-half the forward speed.
6	**WARNING** Applicable U.S. Coast Guard instructions and SOP must be strictly adhered to when/if the RB-M Class boat is in close proximity to any vessel that fails to identify itself. If contact has been made with the vessel of interest, determine if a boarding ladder (if necessary) is available and rigged.
7	**NOTE** As both the RB-M Class boat and vessel of interest have headway, the pressure of the water on the boat's bow will cause it to sheer away from the vessel of interest. Use this force by touching on the helm to control sheer, in or out, by catching the current on one side of the bow or the other side. **NOTE** When sheering in or out, apply the tiller slightly and be prepared to counteract the tendency of the boat to close or open quickly. Come alongside of the vessel, matching its course and speed.
8	Use helm to hold the boat at the desired position alongside or at some distance off the vessel.

Draft
Further dissemination only as directed by Commandant (CG-937) or higher Coast Guard authority.

Step	Action
9	If set toward the vessel, apply the tiller to sheer the bow out. If too far away, apply the tiller to sheer the bow in.
10	**CAUTION !** Use care when going alongside a vessel of interest so as not to damage the collar. Make contact with the forward sections of your boat (about halfway between the bow and amidships). Use helm and power to hold the bow into the other vessel at the same forward speed. Do not use so much helm or power that you cause the other vessel to change course.
11	Ensure that communication with the Operational Commander is established to update the status of the assigned mission. If personnel are to be embarked/disembarked on the vessel of interest, utilize a boarding ladder as provided. Minimize the time alongside. If necessary and following U.S. Coast Guard instructions and SOP, “make-up” to the other vessel rather than relying on helm and power to maintain contact.
12	When the mission is complete, embark all personnel. Sheer the stern in with the helm to get the bow out. Avoid getting set toward the side or stern of the vessel.
13	Apply gradual power to gain slight relative speed. Maneuver the boat away from the vessel of interest. Continue to update position and status of the mission with the Operational Commander.

Draft
Further dissemination only as directed by Commandant (CG-937) or higher Coast Guard authority.

Draft
Further dissemination only as directed by Commandant (CG-937) or higher Coast Guard authority.

Section E. Ice Conditions

Introduction

The 45FT RB-M is not designed to break ice and should avoid operations in this capacity if at all possible. The 45FT RB-M can, however, operate through slush ice if necessary to reach open water. Do not exceed 1000 RPM when operating in ice conditions. In slush conditions, ensure that the sea water cooling system is checked regularly to ensure clogging has not occurred. Operations at high speed (during cold weather) will increase the likelihood of topside icing due to freezing spray.

WARNING

Excessive topside icing will greatly affect the boat's stability and righting arm. ANY topside icing should be cause for the coxswain to re-evaluate the conditions and re-assess the risks involved in the mission. The boat is technically capable of survival with up to 3/4" of ice covering the entire boat in heavy weather with expert boat handling. Operation with topside icing should only be attempted during extreme emergencies after proper risk assessment and approval from the operational commander.

NOTE

Be aware that freezing spray may seal hatches and scuttles, thus limiting immediate or emergency access. Recovery recess gratings may become iced in place. Prudent operations under these conditions may be to run with the port grating down (for safe access to the forward deck) and the starboard grating up (for PIW recovery).

Draft
Further dissemination only as directed by Commandant (CG-937) or higher Coast Guard authority.

Draft
Further dissemination only as directed by Commandant (CG-937) or higher Coast Guard authority.

Section F. Personnel in Water

Pick-Up Ports

The port and starboard deck recesses or "pick-up ports" are designed to allow for recovery of personnel in the water despite the 45FT RB-M's high freeboard. The side recess grating is capable of supporting two (2) crew members under a force of 3 g's. The grating hinges against the side of the deckhouse; two locking pins retain the grating in the up or down position. Only one person is necessary to raise or lower the deck grating, but it is faster and safer if two persons are used.

NOTE

Gratings should be secured in the up position prior to heavy weather and/or surf operations so that the boat is ready for PIW recovery.

Stern Platform

The stern platform can also be used for recovery of personnel in the water. However, recovery using the stern platform will require increased coordination since the coxswain can not maintain visual contact and the waterjet thrust may hinder recovery operation.

Controlling the Boat

From the Pilothouse, the coxswain can use either port or starboard steering station to control the boat during recovery of personnel in the water. This affords the coxswain excellent visibility during the approach as well as during the recovery efforts in the deck recess.

Deck Recess

There are several D-ring attachment points in the vicinity of the deck recess that allow crew members to clip in while conducting personnel recovery. Crew members should be aware that movement is limited within the deck recess area and that moving the victim once aboard may be difficult.

CAUTION !

During personnel recovery efforts in heavy weather or surf conditions, the deck recess is extremely vulnerable to wave action.

Draft
Further dissemination only as directed by Commandant (CG-937) or higher Coast Guard authority.

Draft
Further dissemination only as directed by Commandant (CG-937) or higher Coast Guard authority.

Section G. Operating with Helicopters

Hoist Working Area	The 45FT RB-M provides a stable platform for helicopter hoists; however, several design factors are worthy of consideration. First, the aft location of the boat's mast makes for a small working area in which the helicopter and boat crew can work from. The trail line method is often the safest way to conduct the hoist. The crew communication system is equipped with active noise reduction that will allow clear communications during helicopter operations.
Crew Placement	A common crew placement strategy is to have two crew members on the stern to work the hoist. A third crew member communicates via hand signals with the coxswain who controls the boat's course and speed from the Pilothouse.
Procedures	Detailed procedures and instructions on helicopter operations are contained in the Boat Crew Seamanship Manual, COMDTINST M16114.5 (series).

Draft
Further dissemination only as directed by Commandant (CG-937) or higher Coast Guard authority.

Draft
Further dissemination only as directed by Commandant (CG-937) or higher Coast Guard authority.

Section H. Anchoring

Introduction

The 45FT RB-M does not often drop anchor. However, the boat is fitted with an anchoring system designed for use when the boat must stand by a location or in an emergency.

Anchoring the Boat

The anchor is stowed in a bracket on top of the Survivors' Compartment, port side. The bracket allows for the anchor chain to be secured to the anchor before removing the anchor from the bracket.

Take the following steps to safely anchor the boat:

Step	Action
1	Unlatch the two quick-acting couplings on the hawsepipe cap.
2	Pull the hawsepipe cap straight up and grab the stainless steel chain and pull hard. This will break the double wrapped sail twine securing the anchor reel and allow it to freely rotate. **NOTE** A lanyard will keep the hawsepipe cap onboard.
3	Remove the shackle from the J-hook and pull the entire length of anchor chain to make a round turn around the base of the bow post and out through the open chock (pull the quick-acting pin from the bow chock) and around the port handrail.
4	Once the anchor line and chain are around the port handrail, attach the 3/8" shackle to the open eye in the end of the fortress anchor. Do not remove the anchor from the bracket until directed by the coxswain.
5	As directed by the coxswain, the anchor should be dropped over the side well clear of the boat.

Draft
Further dissemination only as directed by Commandant (CG-937) or higher Coast Guard authority.

Step	Action
6	Once the anchor is tending “up and down”, the coxswain should back down until the desired amount of scope is attained and the anchor line is secured.

Weigh Anchor

Take the following steps to safely weigh anchor:

Step	Action
1	Position one crew member at the bitt and one between the bitt and the bullnose. As the coxswain moves the boat slowly forward, the forward crew members take up the slack in the line while maintaining one round turn at the bitt.
2	Once the anchor is at “short stay”, the anchor line should be secured at the forward bitt.
3	Crew members can then attempt to break the anchor free from the bottom. If unable to do so, the coxswain should move the boat slowly forward until the anchor breaks free.
4	Once free, crew members can pull the remaining anchor line and the anchor on board.
5	When the anchor is aboard, the coxswain should take up a stable course so that the crew members can stow the anchor in its bracket and the anchor line returned to the anchor reel with the anchor shackle attached to the J-hook on the hawsepipe cap.

Draft
Further dissemination only as directed by Commandant (CG-937) or higher Coast Guard authority.

Section I. Towing and being Towed

Introduction

Towing a disabled vessel requires a high degree of awareness of all potential hazards, as well as full knowledge of the capabilities and limitations of the particular components within the towing operation. The safety of your crew and the crew of the towed vessel is more important than property.

CAUTION !

During normal operation, engines should not overload for more than a few seconds, if at all. Continually overloading the engines and/ or overriding the DDEC significantly shortens engine service life.

NOTE

Towing procedures are described in the Boat Crew Seamanship Manual, COMDTINST M16114.5 (series).

Draft
Further dissemination only as directed by Commandant (CG-937) or higher Coast Guard authority.

NOTE

The DDEC control system is equipped with an engine overload protection feature which allows the coxswain to exceed the maximum power curve for a set period of time. Temporary overloading of the engines may occur during surf operations, towing evolutions, and single engine operations.

When the engine(s) have been in an overload condition for more than one minute, the EDM(s) will give an audible alarm and display "Code 410, Overload Warning." This warning will be displayed for two minutes. If no action is taken for two minutes, the EDM(s) will then display "Code 58, Torque Overload," and the engine output will automatically ramp down to the maximum allowed power curve.

If operations necessitate, the coxswain may override this automatic ramp down by pressing and releasing the "Overload" button on the station control panel. This can be pressed anytime during an overload situation and will allow an additional two minutes of operation above the maximum power curve.

General

The RB-M is capable of towing a vessel of 100 long tons displacement in a wind of 30 knots and 8- foot seas. The RB-M is designed to tow disabled vessels either alongside or astern. The tow line reel is located at the aft end of the main deck, to starboard of the raised trunk. In this position, it is convenient for the operating crew to pull the towline off the reel onto the aft deck and deploy it to the disabled vessel.

The upper handrail around the aft deck is over-sized to accept towline loads. This arrangement includes a reinforced pipe gate at the aft opening to the stern platform. This pipe gate is hinged, and pinned on the rail, making for a smooth, snag-free, continuous rail across the stern when closed. Towline stops are located on the

Draft
Further dissemination only as directed by Commandant (CG-937) or higher Coast Guard authority.

handrail outboard of the towing bitt to prevent the towline from moving forward of the beam.

Approaches

WARNING

Approach a disabled vessel slowly. The Kamewa water jets may project water up and aft for some distance. If the operator applies excessive thrust, the pump discharge may be projected up and onto smaller boats.

The RB-M fendering does not extend around the stern, and the stern platform is not designed for impact protection.

The prevailing winds and seas can greatly affect the ability to safely approach and take another vessel in tow.

Bow to the wind

The “traditional” bow into the prevailing conditions towing approach is not always the most effective. When approaching and station keeping with the bow into the seas, the coxswain must be aware of a “see-saw” effect, which greatly affects crew performance on the fantail. As the 45FT RB-M climbs the front of a swell and as the swell passes under the boat, the boat “see-saws” or pivots just aft of the recovery well. This has a catapult effect on crew trying to work on the aft deck.

In addition, bow into the weather towing approaches become very difficult if the wind exceeds 30 kts. Once the wind catches the bow, it is nearly impossible to turn the bow back up into the wind while station keeping. This problem is compounded if large whitecaps are spilling off the seas, as they will further push the bow off.

Stern to the wind

Down swell, stern to the wind and seas towing approaches have proved to be very effective in conditions up to at least 10'. With a majority of its weight aft and nearly seven feet of freeboard at the transom, 45FT RB-Ms can effectively take seas on the stern while providing a stable and protected platform for crew work. In addition, with the stern to the wind, the bow tends to “weathervane” downwind, making it easier to maintain station while taking a vessel in tow.

Safe zone optimal position

Draft
Further dissemination only as directed by Commandant (CG-937) or higher Coast Guard authority.

In both the bow to and stern to the prevailing condition approaches, the most successful method of taking the vessel in tow is to station keep with the towline worked off the beam.

NOTE

Attaching a towline to the bow eye of a small boat is difficult from an RB-M. The stern is too high, and when attempted from the recovery well, escape routes are limited if the two vessels were to strike together.

Affects of Wind with Vessel in Tow

The coxswain should be aware of the additional effect the wind may have on the RB-M with another vessel in tow. The aft tow bitt tends to hold the stern down, further enhancing the effect of wind on the bow. In addition, the coxswain should be aware of substantially increased fuel usage with a large vessel in tow.

Affects of Wind with Vessel in Tow

The coxswain should be aware of the additional effect the wind may have on the 45FT RB-M with another vessel in tow. The aft tow bitt tends to hold the stern down, further enhancing the effect of wind on the bow. In addition, the coxswain should be aware of substantially increased fuel usage with a large vessel in tow.

Securing a Towline

The RB-Ms rescue recesses are close to the water making it easy to attach a towline to a small vessel's bow.

WARNING

Depart a disabled vessel slowly. The Kamewa water jets may project water up and aft for some distance.

Once the towline has been secured to the other vessel, slowly maneuver away. The length of the towline must be considered and an adequate scope of towline should be pull off the reel in advance.

Draft
Further dissemination only as directed by Commandant (CG-937) or higher Coast Guard authority.

Towing

CAUTION !

A small boat may ride under the fender on the RB-M and not be protected by the ionomer foam when towing alongside.

Although RB-M is capable of towing in the Transit or Docking mode, the Docking mode has been calibrated for the RB-M without tow and will not have the same response with a tow astern or alongside. With the Vector controls in the Transit mode the RB-M will respond to power and steering commands with a reduced response depending on the size of the tow and the sea conditions.

Draft
Further dissemination only as directed by Commandant (CG-937) or higher Coast Guard authority.

Draft
Further dissemination only as directed by Commandant (CG-937) or higher Coast Guard authority.

Section J. Securing Procedures

Introduction

Upon completion of the mission, it is essential that crewmembers secure boat equipment correctly to enhance subsequent equipment performance and equipment longevity.

Securing systems from RB-M missions include the following:

1. Engine Securing
2. De-energizing Equipment
3. Post Mission Securing

Draft
Further dissemination only as directed by Commandant (CG-937) or higher Coast Guard authority.

Draft
Further dissemination only as directed by Commandant (CG-937) or higher Coast Guard authority.

Section J.1. Engine Securing

Engine Securing

The following checks must be accomplished for securing engines:

Step	Action
1	Place both Pilothouse AURAGEN Control Switches in the “OFF” position.
2	Depress the Port and Starboard Engine Clutch “DISENGAGE” Buttons on the Clutch Control Panel and verify the “DISENGAGE” button illuminates.
3	Depress the Port and Starboard Engine Stop Buttons and verify the engines stop.
4	Rotate the Bus 1 and Bus 2 Transfer Switches to the “OFF” position.
5	Close Main Engine Seawater Supply Valves.
6	Close Sea Chest De-Icing Valves, if required.

Draft
Further dissemination only as directed by Commandant (CG-937) or higher Coast Guard authority.

Draft
Further dissemination only as directed by Commandant (CG-937) or higher Coast Guard authority.

Section J.2. De-energizing Equipment

De-energizing Equipment

The following steps must be completed after each mission:

Step	Action
1	Secure and de-energize all HVAC/Heating Systems (as required).
2	Secure and de-energize all lighting systems.
3	Secure and de-energize all communications gear.
4	Open (turn off) all circuit breakers on the RB-M AC and DC Power Panels (as required).

Draft
Further dissemination only as directed by Commandant (CG-937) or higher Coast Guard authority.

Draft
Further dissemination only as directed by Commandant (CG-937) or higher Coast Guard authority.

Section J.3. Post Mission Securing

Post Mission Securing

The following checks must be accomplished for post mission securing:

Step	Action
1	Connect the shore tie cable from the boat to the pier connection and energize the cable.
2	Close the Shore Power Feeder Breaker on the 240P1 AC Distribution Panel. Verify the Shore Power Available Indicator illuminates on the Bus 1 and Bus 2 Transfer Switches.
3	Rotate the Bus 1 and Bus 2 Transfer Switches to the "S/P" position.
4	Energize equipment breakers on the 240P2 Shore Power Bus (as required). Ensure the battery charger is operating normally.
5	Check all machinery fluid levels and refill as necessary. **NOTE** It may be necessary to wait 30 minutes to obtain an accurate reading on engine lube oil levels.
6	**WARNING** Do not check engine coolant levels until temperature has dropped to 160 degrees or below (temperature reading on EDM in Pilothouse). Conduct a visual inspection of all spaces and their bilges for any obvious abnormalities.

Draft
Further dissemination only as directed by Commandant (CG-937) or higher Coast Guard authority.

Step	Action
7	Clean engine room bilges and machinery.
8	Sound fuel oil tank and refill to 95% (495 gallons).
9	Secure all watertight doors, hatches and covers.
10	Wash the boat down with fresh water.

NOTE

Keeping the boat clean and neat is very important to control corrosion. Having aluminum in contact with dissimilar metal, particularly a copper alloy, can cause major corrosion problems. Something as small as a penny left in the bilge can cause serious corrosion. Maintaining corrosion control is the responsibility of everyone in the crew.

Draft
Further dissemination only as directed by Commandant (CG-937) or higher Coast Guard authority.

Section K. Long Term Storage

Cradle

The RB-M has a cradle which is suitable for maintenance and long term storage. The cradle allows for ease of on-loading and off-loading and fully supports the craft in such a way as to prevent movement while being used for maintenance or any damage to the craft from long term storage.

Cradle Design

The cradle is made of steel and is designed for a minimum load equivalent to the weight of the RB-M (37,360lbs.) plus 1500 pounds, and with a 3g acceleration in the vertical direction and a 1g acceleration in the horizontal and fore and aft directions.

NOTE

The RB-M does not have an organic trailer, is not intended to be routinely transported, and should only be transported by licensed professionals.

Cradle Transport

The cradle is transportable in a Twenty Equivalent Unit container. The cradle can be disassembled to accomplish the transport. If disassembled, the cradle has match markings to facilitate reassembly. Care should be taken to ensure removed items are tagged, marked and the tags attached to each mating item. The tags are resistant to oil, water, and fading. Removed hardware (bolts, nuts, pins, screws, washers, and others) are then reinstalled in the mating parts and secured to prevent their loss.

Cradle Lift

The cradle is designed to be lifted by a crane and travel lift with the boat in the cradle. All associated components used to lift the cradle and boat are supplied. This includes spreader bars, shackles and slings. All attachments used for lifting are stored on the cradle when assembled.

Cradle towing

The cradle has retractable castors and a towing hitch. It is intended that the assembled cradle be moved by a forklift or other vehicle when the boat is not on it. The cradle is also designed to be lifted with a forklift when empty.

Draft
Further dissemination only as directed by Commandant (CG-937) or higher Coast Guard authority.

Securing the Boat

The cradle has padeyes for securing the boat to the cradle using the existing boat mooring points. The cradle also is fitted with padeyes to be used for securing it to a deck of a ship. There are sufficient numbers of padeyes to allow the use of standard marine tie downs. All fittings are designed to withstand the design accelerations of the cradle.

Hull Support

The cradle hull supports have padding to prevent damage as required. Padding material is weather and UV resistant. The cradle can be stored outside uncovered.

Draft
Further dissemination only as directed by Commandant (CG-937) or higher Coast Guard authority.

Emergency/Casualty Control Procedures Introduction

Introduction

Responding to equipment casualties and emergencies aboard RB-M Class boats should be second nature to all members of the crew. The ability of crewmembers to take immediate action to control emergency situations is critical, to prevent a bad situation from getting worse. While every event is different, step-by-step procedures help gain control of the casualty and aid in troubleshooting.

The first step in responding to all casualties is to protect the immediate safety of all crewmembers and to communicate the nature of the casualty to the crewmembers. It is the coxswain's responsibility to keep the Operational Commander informed of all emergencies encountered during the operation of the boat.

The coxswain and crew should work together to determine if equipment casualties can be safely repaired while underway. The coxswain must decide whether a casualty has impacted the ability of the boat and crew to complete the mission. The coxswain should not make the decision in a vacuum; input from other crewmembers, as well as communication with the Operational Commander, should be used to determine whether to continue with the mission. The following factors should be considered:

1. The safety and physical condition of the crew and vessel.
2. Equipment limitations due to the casualty.
3. Current and forecasted weather and sea conditions.
4. The urgency of the mission.

This chapter contains the following sections:

- Emergency Procedures
- Casualty Control Procedures

Draft
Further dissemination only as directed by Commandant (CG-937) or higher Coast Guard authority.

Draft
Further dissemination only as directed by Commandant (CG-937) or higher Coast Guard authority.

Section A. Emergency Procedures

Introduction

Emergency Procedures provide immediate/controlling actions to be taken by the crew when personnel and/or equipment are at risk. The objective is the immediate safety of the crew and to bring the boat to a safe operating condition.

When the emergency has been controlled and the boat is in a safe condition, the coxswain and crew must determine the following:

- Is there a Disabling Casualty or Restrictive/Major/Minor Discrepancy
- Can the crew conduct repairs in a safe and timely manner?
- What is the affect on the mission?

Once this is done, communications with the Operational Commander should be used to determine mission status and what assistance, if any, is required for the boat.

This section contains the following Emergency Procedures:

- Capsizing
- Collision
- Run Aground
- Striking a Submerged Object
- Flooding (Underway)
- Flooding (Inport)
- Carbon Monoxide Alarm
- Personnel In Water (PIW)
- Fire in the Engine Room
- Fire (Non-Engine Room Spaces)

Draft
Further dissemination only as directed by Commandant (CG-937) or higher Coast Guard authority.

Draft
Further dissemination only as directed by Commandant (CG-937) or higher Coast Guard authority.

Section A.1. Capsizing

Preparation

The 45FT RB-M is designed to be self-righting, with the pilothouse and cabin doors and windows watertight. When the risk of capsize is high, ensure that the cabin door, windows and hatches remain closed and watertight. If lower gunwale digs into the trough, prepare to roll over. Average time under water will be approximately 8 to 12 seconds. Although the boat was built to withstand a roll over, there may be damage.

Recovery

Once righted, assess the situation quickly. You may be in a situation that will potentially capsize the boat again, so if possible maneuver to a position that lessens the likelihood of a capsize. Check the crew to ensure no one was lost overboard or injured. Check for lines overboard that might get caught in the waterjets. If the engines are still working, move to safe water.

A capsize or extreme roll of over 90 degrees may cause the roll over switch to activate. This switch automatically brings the engines back to idle to prevent engine damage and reduce the amount of water that enters the engine room. In order to disengage the switch, and regain control of the engines, or “re-qualify the throttles”, it is necessary to bring the engine control joy stick back to the “neutral thrust” position.

NOTE

It may be necessary to re-qualify the throttles by bringing the controls back to the neutral thrust position to gain control of engines and reduction gears.

Actions

Once in safe water, take the following actions:

Step	Action
1	The boat engineer will go below to check for damage.
2	Investigate the condition of the engine room by examining the engine room using the CCTV system, and by accessing the engine room via the hatch. The engine room may be coated with water and oil presenting a fire hazard.
3	Begin de-watering the vessel by energizing all of the installed electric bilge pumps. If the flooding is too

Draft
Further dissemination only as directed by Commandant (CG-937) or higher Coast Guard authority.

Step	Action
	severe to be handled by the electric bilge pumps, rig the CG-P6 on the aft deck and connect the suction line to the engine room suction standpipe.
4	Once dewatering is complete, check the oil in both main engines (Engines must be secured to ensure an accurate reading). Add oil as necessary. **NOTE** Engines should be shut down to check oil level. If circumstances make securing the engines inappropriate, wait to check the oil levels until the situation has further stabilized. In the meantime, keep a close eye on the engine oil pressure.
5	Closely check the material condition of each compartment. Report results to the coxswain.
6	After damage has been assessed, determine whether it is safe to proceed with the mission or should you return to the unit.
7	Upon returning to the station, all electronic and electrical equipment must be removed and cleaned.

NOTE

Do not hook up the shore tie. Electronic equipment in all below decks spaces may be soaked with oil and water.

Draft
Further dissemination only as directed by Commandant (CG-937) or higher Coast Guard authority.

WARNING

A back up means of communication is critical after a capsizing or knockdown. A portable VHF-FM radio is the best means of passing critical situation reports immediately following this type of situation.

NOTE

All wiring must be cleaned, dried and inspected. Once complete, all electrical equipment must be tested thoroughly. The engine room must be washed down and all insulation material in the Survivors compartment must be inspected. All fluids and associated filters, such as reduction gear, hydraulic system, and main engine oil should be replaced.

Draft
Further dissemination only as directed by Commandant (CG-937) or higher Coast Guard authority.

Draft
Further dissemination only as directed by Commandant (CG-937) or higher Coast Guard authority.

Section A.2. Collision

Collision

Upon colliding with an object, take the following action:

Step	Action
1	Reduce engine RPM to neutral; determine condition of the crew.
2	The crewman should check all forward compartments for damage. The engineer should check the engineroom, auxiliary machinery compartment and lazarette for damage. Make reports to the coxswain.
3	**WARNING** Do not manipulate engine or steering controls while crewmembers are inspecting the engineroom/lazarette for damage. Waterjet Controls. Visually observe the stop to stop movement of the steering nozzle ram, the reversing bucket ram, the vector angle indicator.
4	Individually increase engine RPM to test for responsiveness and any unusual noise or vibration. Determine range and severity of vibration, if any.
5	Maintain engine RPM below range of vibration. If vibration is too severe, secure the engine.
6	Notify station of situation, current position, and current status.
7	If another vessel is involved, provide assistance as required.

Draft
Further dissemination only as directed by Commandant (CG-937) or higher Coast Guard authority.

Draft
Further dissemination only as directed by Commandant (CG-937) or higher Coast Guard authority.

Section A.3. Accidental Grounding - Collision with a Submerged Object

Symptom — The boat strikes a submerged object or temporarily runs aground.

Actions — Take the following actions:

Step	Action
1	Reduce RPM on both engines to neutral (when in safe water and out of surf zone).
2	Notify crew of casualty.
3	Determine what was hit, where the object is located, and if it can still be seen.
4	Verify current position, depth of water, and evaluate situation.
5	Engineer checks engine room, auxiliary machinery compartment, and lazarette for obvious flooding or damage.
6	Engineer checks for proper cooling water circulation or debris in the Raw Water (R/W) strainers and shift if necessary.
7	Crew member checks forward compartments for flooding or obvious damage.
8	Coxswain conducts steering checks to ensure stop to stop movement of steering nozzle and reversing bucket.
9	Coxswain will check engine RPM in both neutral and engaged at various speeds while engineer is checking for vibration/flooding and to assess damage to propulsion system.
10	Coxswain maintains engine RPM below range of vibration, if necessary. If vibration is too severe, secure engine.
11	Coxswain notifies station of situation, current position, and current status. Coxswain coordinates with station for tow or other assistance when risk assessment

Draft
Further dissemination only as directed by Commandant (CG-937) or higher Coast Guard authority.

Step	Action
	indicates crew or vessel safety will be jeopardized through continued operation.

NOTE

If possible, the boat should be hoisted to determine extent of damage; especially if there is a vibration.

Draft
Further dissemination only as directed by Commandant (CG-937) or higher Coast Guard authority.

Section A.4. Flooding (Underway)

Actions

In the event a bilge flooding alarm sounds, maneuver the RB-M into a safe area and take the following actions:

NOTE

When a bilge alarm switch is activated, the audible strobe in the Pilothouse will sound/flash.

NOTE

The bilge flooding alarm system is designed to notify the crew of an onboard EMERGENCY underway as well as dockside. This system should be confirmed operational prior to and upon return from any missions or sorties.

Step	Action
1	The engineer will check the display/alarm panel to identify the space where flooding is indicated. Notify the coxswain and silence the alarm.
2	The engineer and a crewmember will proceed to the flooded space indicated by the alarm panel and report status to coxswain. If directed, enter space to investigate.
3	The engineer shall report to the coxswain the extent, cause and corrective actions necessary to control or stop the flooding.
4	The crew will prepare to apply basic casualty control procedures, making ready the damage control kit and CG P-6 pump as required.
5	The crew shall check the material condition of each compartment. Report results to the coxswain.
6	After damage has been assessed, determine whether it is safe to proceed with the mission or return to the unit.
7	Notify station of situation and current status.

Draft
Further dissemination only as directed by Commandant (CG-937) or higher Coast Guard authority.

Draft
Further dissemination only as directed by Commandant (CG-937) or higher Coast Guard authority.

Section A.5. Flooding (In Port)

NOTE

This procedure is applicable when the RB-M is in-port.

Symptoms

Bilge Alarm on the LCD Alarm Display Panel.

Law Enforcement Light and Loudhailer Horn will flash/sound.

Actions

In the even a bilge flooding alarm sounds, take the following actions:

Step	Action
1	The engineer/caretaker will check the display/alarm panel to identify the space where flooding is indicated and silence the alarm.
2	The engineer/caretaker will proceed to the flooded space indicated by the alarm panel, open the watertight hatch and determine status.
3	The engineer/caretaker shall report to the station the extent, cause and corrective actions necessary to control or stop the flooding.
4	**WARNING** DO NOT enter a flooding/partially flooded compartment alone. It is extremely dangerous to enter/ work alone in a flooding/partially flooded compartment. The crew/caretaker must ensure personnel safety is maintained at all times.

Draft
Further dissemination only as directed by Commandant (CG-937) or higher Coast Guard authority.

Step	Action
	The engineer/caretaker will prepare to apply basic casualty control procedures as required.
5	The crew/caretaker shall check the material condition of each compartment.
6	After damage has been assessed, notify station chain of command of situation and current status.

CAUTION !

The bilge flooding alarm system is designed to notify the crew of an onboard EMERGENCY underway as well as dockside. This system should be confirmed operational prior to and upon return from any missions or sorties.

Draft
Further dissemination only as directed by Commandant (CG-937) or higher Coast Guard authority.

Section A.6. Carbon Monoxide Alarm

Carbon Monoxide Alarm

Carbon Monoxide alarm illuminates at the Alarm/Display Panel in the Pilothouse for:

- Survivor's Cabin.
- Pilothouse.

In the event a carbon monoxide alarm sounds, take the following actions:

Survivor's Cabin:

a. Evacuate the compartment immediately.

b. Once evacuated, close the Survivor's Cabin doors.

c. Ensure Pilothouse ventilation fans are energized and operating.

d. Investigate for cause of alarm and ventilate the space.

e. Notify station of situation and current status

Pilothouse:

a. The coxswain should maneuver to a safe area, reduce RPM to clutch ahead, and secure the engines.

b. Evacuate the Survivor's Cabin. Close the Survivor's Cabin doors.

c. Open Pilothouse windows and door. Ensure Pilothouse ventilation fans are energized and operating. Evacuate the Pilothouse.

d. When directed by the coxswain, rig the anchor for use.

e. Investigate for cause of alarm.

f. Notify station of situation and current status. Coordinate with station for assistance, if required.

Draft
Further dissemination only as directed by Commandant (CG-937) or higher Coast Guard authority.

Draft
Further dissemination only as directed by Commandant (CG-937) or higher Coast Guard authority.

Section A.7. Personnel in Water

Symptoms

Personnel sighted in water

Crewmember falls overboard

Actions

In the event of man overboard/personnel in the water, take the following actions:

Step	Action
1	The coxswain should reduce engine RPM, inform the crew, and notify the station of situation.
2	The navigator should establish electronic position on GPS.
3	The navigator should use searchlight, deck lighting, and/or FLIR Camera to locate personnel in water, if required.
4	The coxswain orders rescue crewmembers to don appropriate safety and rescue gear.
5	Crewmembers should secure Rescue Recess Deck Grating in the "raised" position.
6	**WARNING** ✋ Extreme caution must be taken when placing a swimmer in the water to facilitate personnel rescue. **CAUTION !** During personnel recovery efforts in heavy weather, the rescue recess is extremely vulnerable to wave action.

Draft
Further dissemination only as directed by Commandant (CG-937) or higher Coast Guard authority.

Step	Action
	NOTE The coxswain may need to shift the joystick mode from "TRANSIT" to "DOCKING" to provide for better maneuvering when conducting personnel recovery. The coxswain maneuvers the boat to facilitate personnel recovery.
7	Once personnel recovery is complete, crewmembers perform first aid as required.
8	Notify station of situation and current status. Coordinate with station for assistance, if required.

Draft
Further dissemination only as directed by Commandant (CG-937) or higher Coast Guard authority.

Section A.8. Fire in the Engine Room

Fire in the Engine Room

The engine room has a temperature sensor and smoke detector that activates the engine room fire alarm at the Alarm/Display Panel when the temperature in the engine room reaches 190 oF or smoke is detected. The engine room also has a camera that can be monitored at the chart plotter displays at the helm, navigation and primary crew consoles. In addition signs of smoke coming from the engine room vent indicate an engine room fire.

In the event of an engine room fire, take the following actions:

Step	Action
1	The coxswain should reduce engine RPM to neutral, secure both engines, secure the fuel oil by pulling the emergency fuel cutout valves, and inform the crew.
2	The engineer should view the engine room using the CCTV system to determine if there is a fire in the space and report results to the coxswain.
3	When ordered by the coxswain, the engineer should energize the FM-200 Fire Fighting System by pulling up on the lever of the Nitrogen Pilot Cylinder in the Pilothouse.
4	**NOTE** There is a 30 second delay built into the FM-200 Fire Fighting System. This delay can be manually overridden by pulling the release handle on the Nitrogen Delay Cylinder or the FM-200 Cylinder in the Auxiliary Machinery Compartment. The engineer should secure all non-essential electrical power at the DC Power Panels with the exception of the VHF-FM radio.
5	Notify station of situation, current position, and current status. Coordinate with station for assistance.

Draft
Further dissemination only as directed by Commandant (CG-937) or higher Coast Guard authority.

Step	Action
6	**WARNING** ✋ It is extremely dangerous to enter a compartment during or after a fire. After the engine room has been flooded with fire fighting agent, extensive ventilation is necessary to ensure safety when entering, however any introduction of oxygen into the compartment may ignite a fire reflash. Keep the space sealed until towed ashore and secured. Station a reflash watch to monitor engine room conditions.
7	Keep the engine room secured until towed ashore and secured.
8	When directed by the coxswain, rig the anchor for use.
9	As much as possible, stay off the deck above the engine room, as heat may have caused structural damage.

Draft
Further dissemination only as directed by Commandant (CG-937) or higher Coast Guard authority.

Section A.9. Fire (Non-Engine Room Spaces)

Symptoms

The non-engine room spaces have a temperature sensor and smoke detector that activates the respective space fire alarm at the Alarm/Display Panel when the temperature in the space reaches 190 °F or smoke is detected.

Smoke is observed coming from the space vents.

Actions

In the event of a fire, take the following actions:

Step	Action
1	The coxswain should bring the joystick to the center position to reduce RPMs, inform all crew members and notify the station. The coxswain shall position the RB-M to minimize the motions of the boat, and to reduce the impact of the wind driven smoke and fire. If the fire is adjacent to the engine room, secure the engines.
2	The engineer should proceed to the affected compartment with a safety observer. View through the view ports (if installed), check ventilation openings, and check bulkheads/decks/watertight hatches for heat, discoloration or warping. Ensure all QAWT Hatches are secure.
3	Engineer secures power to affected space at the AC and DC Distribution Panels in the Pilothouse.
4	Engineer secures the battery-disconnect switches on the Primary Crew Console in the Pilothouse, or secures all non-essential electrical load breakers, if directed by the coxswain.
5	Safety observer is to establish a fire watch with portable fire extinguisher.
6	Crew member rigs the anchor for emergency use (fair-lead line, but anchor remains in bracket) if directed by coxswain.
7	Keep the affected compartment sealed until moored and secured.
8	Coxswain coordinate with station for tow or other assistance.

Draft
Further dissemination only as directed by Commandant (CG-937) or higher Coast Guard authority.

Step	Action
9	**WARNING** ✋ It is extremely dangerous to enter a compartment during or after a fire. Do not enter any compartment under any circumstances. There is not an installed fire fighting system in any other compartment other than the Engine Room.
10	As much as possible, stay off the deck above the affected space, as heat may have caused structural damage.

Draft
Further dissemination only as directed by Commandant (CG-937) or higher Coast Guard authority.

Section A.10. Shelter-In-Place

Symptoms

The boat has been exposed to, or is about to be exposed to, air borne hazardous materials (HAZMAT) including chemical, biological, or radiological contaminants may be released accidentally or intentionally into the environment.

Actions

In the event Shelter-In-Place is required, take the following actions:

NOTE

These steps assume the RB-M is anchored/ moored and the engines are secured.

Step	Action
1	Close all compartment doors, hatches, and scuttles and ensure they are dogged down completely.
2	Close the Pilothouse QAWT Door and ensure it is dogged down completely.
3	Coxswain and Navigator close the Pilothouse Port and Starboard Sliding Windows and ensure each air seal activates.
4	Engineer secure the “P/H VENT FAN” Switch in the “OFF” position at the Primary Crew Console. **NOTE** The Pilothouse and Head Ventilation Fans are powered from the same electrical circuit and are controlled by the “P/H VENT FAN” Switch on the Primary Crew Console.

Draft
Further dissemination only as directed by Commandant (CG-937) or higher Coast Guard authority.

Step	Action
5	**WARNING** ✋ DO NOT operate the Head Ventilation Fan with the blast gate closed. This could overheat the fan and cause irreparable damage to the fan and cause a fire. Engineer close the blast gate above the ventilation fan in the Head.
6	Engineer close the blast gate above the port passenger seats in the overhead of the Survivors' Compartment.
7	Engineer secures all non-essential circuit breakers on the AC and DC Power Distribution Panels.
8	**WARNING** ✋ DO NOT operate the A/C Units off of the boat batteries. This will reduce the amount of battery power available to operate essential RB-M systems. Coxswain notify station of situation, current position and current status.
9	If possible, transit away from the HAZMAT source and seek a clear environment.
10	Coxswain contact the Station to receive further instructions on where to proceed for decontamination.

Draft
Further dissemination only as directed by Commandant (CG-937) or higher Coast Guard authority.

Section B. Casualty Control Procedures

Introduction

Casualty Control Procedures provide immediate/controlling actions to be taken by the crew when an equipment/system failure occurs. The objective is to minimize damage to the equipment/systems and bring the boat to a safe operating condition.

When the casualty has been controlled and the boat is in a safe condition, the coxswain and crew must determine the following:

- Is there a Disabling Casualty or Restrictive/Major/Minor Discrepancy?
- Can the crew conduct repairs in a safe and timely manner?
- What is the affect on the mission?

Once this is done, communications with the Operational Commander should be used to determine mission status and what assistance, if any, is required for the boat.

This section contains the following Casualty Control Procedures:

- Loss of Engine Speed Control
- Loss of Fuel Pressure
- Loss of Engine Lube Oil Pressure
- High Engine Coolant Temperature
- High Exhaust Outlet Temperature
- Loss of Reduction Gear Oil Pressure
- High Reduction Gear Oil Temperature
- Loss of Clutch Control
- Fouled Waterjet
- Loss of Steering (Electrical)
- Loss of Steering (Hydraulic)
- Loss of Generator
- Loss of Electrical Control Unit
- Loss of Battery Bank

Draft
Further dissemination only as directed by Commandant (CG-937) or higher Coast Guard authority.

- Unusual Noise or Vibration in Powertrain
- Communication/Navigation Systems Power Failure

Draft
Further dissemination only as directed by Commandant (CG-937) or higher Coast Guard authority.

Section B.1. Loss of Engine Speed Control

Actions

In the event engine speed cannot be controlled, take the following actions:

WARNING

Do not restart the engine until the problem has been corrected.

WARNING

DO NOT use the Fixed Fire Fighting System to secure the engine. Depleting the fire fighting capabilities of the boat can be dangerous.

Step	Action
1	Ensure the active light is lit for the control station in use.
2	Bring the Engine Control Joystick to the neutral position.
3	If this fails to control engine speed, switch to a different control station attempt to take control.
4	If this fails, push and hold down the engine stop button for the affected engine. If this fails, secure the DDEC system breaker.
5	If the engine fails to secure, the coxswain should pull the fuel cutoff valve for the affected engine and allow the engine to run out of fuel.
6	If time does not allow for the affected engine to run out of fuel, or if the fuel cutoff fails to secure the engine, the engineer should proceed to the Auxiliary Machinery Compartment and trip the intake air flapper valve by pulling the tab on the bottom of the pressure switch box in the installed fire fighting system, or if considered safe, proceed to the engineroom and manually trip the air shutdown for the affected engine.
7	

Draft
Further dissemination only as directed by Commandant (CG-937) or higher Coast Guard authority.

Draft
Further dissemination only as directed by Commandant (CG-937) or higher Coast Guard authority.

Section B.2. Loss of Fuel Oil Pressure

Symptoms

If a loss of fuel oil pressure occurs, the engine will begin to run rough with a rapid loss of power. The EDM alarm should sound and flash a Code 48 (Fuel Oil Pressure Low) warning. However, the alarm may not sound before loss of power due to high restriction across primary fuel filters. The engine has been observed to lose power when the vacuum reached 15 inches on the installed gauges. The gauges are equipped with a redline that indicates the highest vacuum reached. For this reason the engine does not need to be running to determine if you have a high restriction in the filter.

Actions

In the event of a loss of fuel oil pressure, take the following actions:

Step	Action
1	The coxswain should reduce RPMs to clutch ahead, determine which engine has lost power, secure the affected engine and inform the crew.
2	Ensure the engine room is safe to enter using the CCTV system.
3	If it is safe to enter, check the bilge for fuel oil.
4	Check the entire fuel system for leaks; check fuel tank level.
5	Check the emergency fuel cutout valves to ensure that they are open.
6	Check the primary fuel filter/separator for accumulated sediment and water in the bowls. Replace if suspect. Prime the fuel system.
7	Start the affected engine and check for proper operation.
8	If the problem still persists, secure the affected engine.
9	Notify station of situation and current status.

Draft
Further dissemination only as directed by Commandant (CG-937) or higher Coast Guard authority.

Draft
Further dissemination only as directed by Commandant (CG-937) or higher Coast Guard authority.

Section B.3. Loss of Engine Lube Oil Pressure

Actions

If the EDM alarm sounds and flashes a Code 45 (Oil Pressure Low), take the following actions:

Step	Action
1	The coxswain should reduce RPMs to clutch ahead and determine which engine has loss of lube oil pressure.
2	Immediately secure the affected engine and inform the crew. **NOTE** The lube oil alarm is variable, which means that at any given engine RPM, the oil pressure must be within a certain range, or the alarm will sound. The lube oil alarm may be directly related to engine temperature; an overheating engine may set the lube oil alarm off.
3	Ensure the engine room is safe to enter using the CCTV system.
4	If it is safe to enter, check the bilge for lube oil.
5	Check the entire lube oil system for leaks; check engine oil sump for quantity and quality.
6	Check the coolant recovery tank for contamination.
7	If the cause is not correctable or cannot be identified, do not restart the engine.
8	Notify station of situation and current status.

Draft
Further dissemination only as directed by Commandant (CG-937) or higher Coast Guard authority.

Draft
Further dissemination only as directed by Commandant (CG-937) or higher Coast Guard authority.

Section B.4. High Engine Coolant Temperature

Actions

If the EDM alarm sounds and flashes a Code 44 (Coolant Temperature High), take the following actions:

Step	Action
1	The coxswain should reduce RPMs to clutch ahead and determine which engine has overheated and inform the crew.
2	Ensure the engine room is safe to enter using the CCTV system.
3	If steam is present, or if the coolant temperature is above 220 °F, secure the affected engine.
4	**WARNING** ✋ If steam is flowing from the coolant recovery tank vent, the engine should be secured and cooled naturally. DO NOT open the Coolant Recovery Tank or Heat Exchanger Tank caps. If the pressure is released when the coolant is extremely hot, the coolant will either flash to steam or boil with a serious potential for injury. If no steam is present, enter the engine room and check the bilge. Check the raw water pipe between the heat exchanger and transmission oil cooler lightly with the back of the hand for coolness to determine which engine water system (raw water or jacket water) the casualty is in.

Draft
Further dissemination only as directed by Commandant (CG-937) or higher Coast Guard authority.

Step	Action
5	If the pipe is cool, the raw water system for the engine is probably operating normally. The engineer should make casualty control checks for the jacket water system.
6	If pipe is hot, the engineer should make casualty control checks for the raw water system.

Jacket Water System

Take the following actions to check the function of the jacket water system:

Step	Action
1	Check the jacket water level. Check the engine and bilge for leakage. Replace fluid if necessary.
2	**WARNING** ✋ Anti-freeze is poisonous. Do not inhale the fumes. Inspect the jacket water pump for normal function.
3	Check lube oil for proper quantity and quality.
4	If jacket water leaks are found, the pump is inoperative, or if temperature continues to climb, secure the engine.
5	**CAUTION !** If after all efforts have been made at casualty control, including reducing the engine load, the engine temperature does not decrease, secure the engine. Notify station of situation and current status.

Draft
Further dissemination only as directed by Commandant (CG-937) or higher Coast Guard authority.

Step	Action
	NOTE Oil alarms and sensors are directly related to engine temperature. An overheating engine will often set off lube oil alarms.

Raw Water System Checks

Take the following actions to check the function of the raw water system:

Step	Action
1	Verify that the sea suction valve is open. Ensure that the de-icing valve is closed.
2	Check the duplex strainer to ensure that the handle is pointing to either strainer. Shift and clean the strainer as necessary.
3	If the strainer is clean, check the raw water pump cover lightly with the back of the hand for coolness. If the impeller is burned up, the cover will be very hot. If the cover is hot, secure the engine. **NOTE** If one engine has overheated due to a clogged sea strainer, the other engine may be close to overheating for the same reason.

Draft
Further dissemination only as directed by Commandant (CG-937) or higher Coast Guard authority.

Draft
Further dissemination only as directed by Commandant (CG-937) or higher Coast Guard authority.

Section B.5. High Exhaust Outlet Temperature

High Exhaust Outlet Temperature

Symptoms

EDM alarm sounds and flashes an Alarm Code (High Wet EGT)

EDM alarm sounds and flashes an Alarm Code (High Dry EGT)

No raw water discharge from the engine exhaust

Actions

If the EDM alarm sounds and flashes an Alarm Code (High Wet EGT or High Dry EGT), take the following actions:

Step	Action
1	The coxswain should bring the joystick to the center position to reduce RPMs, disengage the clutch, immediately secured the affected engine, and inform the crew.
2	The engineer should view the engine room the camera at the Primary Crew Console to ensure it is safe to enter.
3	If it is safe to enter, check the raw water cooling system and exhaust system for leaks.
4	**WARNING** ✋ If casualty is caused by a loss of cooling water or insufficient cooling water flow, raw water piping, exhaust piping, and/or heat exchangers may be very hot and present a serious potential for injury. Check the raw water cooling system in the Lazarette for leaks. Visually inspect the online raw water strainer for debris.

Draft
Further dissemination only as directed by Commandant (CG-937) or higher Coast Guard authority.

Step	Action
5	If the cause is not correctable or cannot be identified, do not restart the engine.
6	Notify station of situation and current status.

Draft
Further dissemination only as directed by Commandant (CG-937) or higher Coast Guard authority.

Section B.6. Loss of Reduction Gear Oil Pressure

Loss of Reduction Gear Oil Pressure

Symptoms

If the EDM alarm sounds, flashes a “CHECK STOP” and “TRANS”, and oil pressure is less than 15 PSI (Neutral) or 205 PSI (Cruising), take the following actions:

Actions

If one or more communication/navigation systems fails to operate properly, take the following actions:

Step	Action
1	The coxswain should bring the joystick to the center position to reduce RPMs, immediately secure the affected engine and inform the crew.
2	The engineer should view the engine room the camera at the Primary Crew Console to ensure it is safe to enter.
3	If it is safe to enter, check the bilge for lube oil.
4	Check the entire transmission lube oil system for leaks; check oil sump for quantity and quality.
5	If the cause is not correctable or cannot be identified, do not restart the engine.
6	Notify station of situation and current status.

Draft
Further dissemination only as directed by Commandant (CG-937) or higher Coast Guard authority.

Draft
Further dissemination only as directed by Commandant (CG-937) or higher Coast Guard authority.

Section B.7. High Reduction Gear Oil Temperature

If the EDM alarm sounds, flashes a “CHECK STOP” and “TRANS”, and oil temperature is greater than 185 °F, take the following actions:

Step	Action
1	The coxswain should reduce RPMs to clutch ahead, immediately secure the affected engine and inform the crew.
2	Ensure the engine room is safe to enter using the CCTV system.
3	If it is safe to enter, check the bilge for oil.
4	Check the entire transmission lube oil system for leaks; check transmission oil sump for quantity and quality.
5	If the cause is not correctable or cannot be identified, do not restart the engine.
6	Notify station of situation, current position, and current status.

Draft
Further dissemination only as directed by Commandant (CG-937) or higher Coast Guard authority.

Draft
Further dissemination only as directed by Commandant (CG-937) or higher Coast Guard authority.

Section B.8. Loss of Clutch Control

Loss of Clutch Control

Symptoms

Clutch fails to engage or disengage when commanded.

Actions

If the clutch fails to engage or disengage when commanded, take the following actions:

Step	Action
1	The coxswain should move the joystick to the center position to reduce RPMs and inform the crew.
2	Check the reduction gear oil pressure on the affected engine EDM. If the oil pressure indicates less than 5 PSIG/205 PSIG (clutch disengaged/clutch engaged), secure the affected engine *immediately*.
3	The engineer should view the engine room through the camera monitor at the Primary Crew Console to ensure it is safe to enter.
4	If it is safe to enter, check the reduction gear lube oil system for leaks; check oil sump for quantity and quality.
5	Check the reduction gear control solenoids and control connections; ensure all components are properly secured.
6	If the cause of casualty is not correctable or cannot be identified, do not restart the engine.
7	Notify station of situation, current position and current status.

Draft
Further dissemination only as directed by Commandant (CG-937) or higher Coast Guard authority.

Draft
Further dissemination only as directed by Commandant (CG-937) or higher Coast Guard authority.

Section B.9. Fouled Waterjet

Fouled Waterjet

Symptoms

It is usually possible to notice when the water jet unit is blocked because:

- Engine speed increases,
- Speed of the boat decreases,
- Unusual noise and vibrations can be heard from the affected water jet unit.

NOTE

Scrap, twigs, seaweed, etc. will not usually block or damage the water jet unit. However, avoid operating over such objects because they affect the performance of the water jet unit.

Actions

If an obstruction of the Water Jet Unit occurs, take the following action:

CAUTION !

If fishing nets or lines are sucked into the water jet unit, the water jet unit must be disengaged as quickly as possible to avoid damage to the impeller and impeller housing.

Step	Action
1	The coxswain should bring the joystick to the center position to reduce RPMs, disengage the affected clutch (if required), and inform the crew.

Draft
Further dissemination only as directed by Commandant (CG-937) or higher Coast Guard authority.

Step	Action
2	**NOTE** The blockage may clear when the boat goes forward and water flows through the affected water jet unit. If the blockage does not clear on its own, select the "DOCKING" mode on the joystick.
3	Ensure the clutch is disengaged on the affected water jet unit.
4	The coxswain should set the joystick so the unblocked water jet unit is providing reverse thrust (reversing bucket lowered) and the blocked water jet unit in the ahead position (reversing bucket raised) to flush the blocked water jet unit.
5	If above was not successful, backflush the water jet unit by pushing and holding the "BACKFLUSH" button on the Clutch Panel. This reverses the rotation of the impeller and causes water to flow backwards through the water jet unit.
6	If above was not successful, secure the affected engine and return to port to perform an inspection through the inspection cover.
7	**WARNING** Make sure the engine primary and secondary circuit breakers are secured, making it impossible to start the engines when the water jet inspection cover is open.

Draft
Further dissemination only as directed by Commandant (CG-937) or higher Coast Guard authority.

Step	Action
	WARNING ✋ Never open the inspection cover before checking that the water level is lower than the openings. The Lazarette may flood if water can enter the boat through the opening. Never leave an open cover unattended. **WARNING** ✋ Inspection covers should never be open when the boat is not moored to the dock in a calm location. The motions of the boat in open water can cause flooding through the inspection cover. Secure the engine and engine primary/secondary circuit breakers.
8	Check that the water level is not above the inspection cover. If the water level is too high, weight can be added to the bow so that the stern rises sufficiently for the inspection cover to be opened.
9	If the above steps have not removed the blockage, a diver may be able to remove the scrap from the inlet duct. If aft all steps fail, the boat can be removed from the water to remove the blockage and inspect for damage.
10	Notify station of situation and current status.

Draft
Further dissemination only as directed by Commandant (CG-937) or higher Coast Guard authority.

Draft
Further dissemination only as directed by Commandant (CG-937) or higher Coast Guard authority.

Section B.10. Loss of Waterjet Control (Electrical)

Loss of Waterjet Control (Electrical)

Symptoms

1. No response or incorrect response to steering commands when the tiller is operated.
2. No response or incorrect response to steering commands when the autopilot system is activated.

Actions

When a loss of steering is discovered and there are no corresponding steering hydraulic alarms, take the following action:

Step	Action
1	The coxswain should bring the joystick to the center position to reduce RPMs and inform the crew.
2	The coxswain should attempt steering control transfer to the offline steering control station in the pilothouse. If control transfers, test for steering control.
3	The engineer should check the “WATER JET CONTROLS” Circuit Breaker on the 24 VDC Engine Bus 24P2 and verify the circuit breaker has not tripped.
4	The engineer should connect the Portable Backup Console to the Lower Helm Console
5	The coxswain should verify steering controls on the Portable Backup Console are centered and engine speed controls are at minimum.
6	The coxswain should depress the “BACKUP” Switches on the Portable Backup Console and test for positive steering and engine control.
7	If control is not available at the Portable Backup Console, the engineer should view the engine room the camera at the Primary Crew Console to ensure it is safe to enter.
8	If it is safe to enter, check the steering hydraulic system for proper operation and verify hydraulic oil sump for quantity.

Draft
Further dissemination only as directed by Commandant (CG-937) or higher Coast Guard authority.

Step	Action
9	The engineer should proceed to the Lazarette, open the hatch, and look into the space to ensure that it is safe to enter.
10	If it is safe to enter, check the steering system for leaks; verify all electrical connections are secure and all mechanical connections are intact.
11	If the cause is not correctable and steering hydraulic pressure is normal, steering and reversing buckets can be controlled manually using the proportional directional valves on the Port and Starboard Hydraulic Manifolds.
12	Notify station of situation and current status.

Draft
Further dissemination only as directed by Commandant (CG-937) or higher Coast Guard authority.

Section B.11. Loss of Waterjet Control (Hydraulic)

Loss of Waterjet Control (Hydraulic)

Symptoms

The Helm Controls (joystick, tiller, trim tiller) do not cause a response to the steering nozzles, reversing buckets, or trim tabs (caused by a failure within the hydraulic system).

A “HYDRAULIC TANK LOW LEVEL” alarm sounds and illuminates on the alarm display panel.

Actions

When a partial or complete loss of steering control occurs, take the following actions:

Step	Action
1	The coxswain should bring the joystick to the center position to reduce RPMs and inform the crew.
2	Secure both engines when the hydraulic tank low level alarm on the alarm display panel sounds. **NOTE** If possible, attempt to center the steering nozzles and raise the reversing buckets prior to securing both engines.
3	Verify current position, evaluate situation and contact station.
4	Crew member rigs the anchor emergency use (fair-lead line, but anchor remains in bracket) if directed by coxswain.
5	The engineer should view the engine room the camera at the Primary Crew Console to ensure it is safe to enter.
6	If it is safe to enter, check the bilge for oil and look for system leaks.

Draft
Further dissemination only as directed by Commandant (CG-937) or higher Coast Guard authority.

Step	Action
7	Check the hydraulic reservoir sight glass to ensure ½ to ¾ full. Check the return hydraulic oil filter pressure gauge and ensure filter oil pressure is less than 25 PSI.
8	The engineer should proceed to the Lazarette, open the hatch, and look into the space to ensure that it is safe to enter.
9	If it is safe to enter, check the steering system in the Lazarette for leaks.
10	Coxswain coordinate with station for tow or other assistance when risk assessment indicates crew or vessel safety will be jeopardized through continued operations.

Draft
Further dissemination only as directed by Commandant (CG-937) or higher Coast Guard authority.

Section B.12. Loss of Generator

Loss of Generator

Various alarms and indications can occur when there is a generator failure:

- "PORT GENSET FAILURE" alarm illuminates on the alarm/display panel.
- "STBD GENSET FAILURE" alarm illuminates on the alarm/display panel.
- "AC" or "GEN" Yellow or Red indicators illuminate or flash and alarm horn sounds on the Auragen Control Panels.
- Loss of bus power to the 240P1 Distribution Panel.

In the event of a loss of generator, take the following actions:

Step	Action
1	The coxswain should determine which generator is affected and inform the crew.
2	The engineer should check the condition of the engine room using the CCTV to ensure that it is safe to enter.
3	**WARNING** ✋ The Auragen Generator is belt-driven and operates at a high speed. DO NOT touch the Auragen Generator, drive belt, or drive components during engine operation. If it is safe to enter, conduct visual inspection of the affected generator, associated cabling and generator drive system.
4	The engineer should proceed to the auxiliary machinery space. If safe to enter, the engineer should check the affected generator ECU/ICS and associated cabling.
5	Notify station of situation and current status.

Draft
Further dissemination only as directed by Commandant (CG-937) or higher Coast Guard authority.

Draft
Further dissemination only as directed by Commandant (CG-937) or higher Coast Guard authority.

Section B.13. Loss of Electrical Control Unit

Loss of Inverter Charger System/ Electrical Control Unit

Symptoms

Various alarms and indications can occur when there is an Inverter Charger System/ Electrical Control Unit (ICS/ECU) failure:

1. “PORT GENSET FAILURE” alarm illuminates on the alarm/display panel.
2. “STBD GENSET FAILURE” alarm illuminates on the alarm/display panel.
3. “AC”, “BATT”, “CHG” or “GEN” Yellow or Red indicators illuminate or flash and alarm horn sounds on the Auragen Control Panels at the Primary Crew Console.
4. Loss of bus power to the 240P1 Distribution Panel.

Actions

If there is indication of a problem with an ICS/ECU, take the following actions:

Step	Action
1	The coxswain should determine which ICS/ECU is affected and inform the crew.
2	The engineer should proceed to the auxiliary machinery compartment.
3	If it is safe to enter, check the affected generator ECU/ ICS and associated cabling.
4	When required, engineer should secure all non-vital equipment at the DC Distribution Panel.
5	If the cause is not correctable or cannot be identified, engineer should determine extent of power loss and impact on current mission.
6	Notify station of situation and current status.

Draft
Further dissemination only as directed by Commandant (CG-937) or higher Coast Guard authority.

Draft
Further dissemination only as directed by Commandant (CG-937) or higher Coast Guard authority.

Section B.14. Loss of Battery Bank

Loss of Battery Bank

Various alarms and indications can occur when there is a low battery voltage/loss of battery voltage:

- The EDM alarm will sound and flash a Code 46 (ECM Battery Low) warning.
- "BAT" Yellow or Red indicators illuminate or flash and alarm horn sounds on the Auragen Control Panels.
- Dimming lights/indicators, electrical/electronic equipment cease/fail to operate, and/or control stations deactivate.

If there is low battery voltage or a loss of battery voltage, take the following actions:

Step	Action
1	The coxswain should reduce RPMs to clutch ahead and inform the crew.
2	The engineer should verify the battery control switches are in the "ON" position at the Primary Crew Console.
3	If it is safe to enter, the engineer should enter the auxiliary machinery space and check the following: • Main Engine Battery Bank (Port) Battery Connections. • House Battery Bank (Starboard) Battery Connections. • Both ECU/ICS units and associated cabling.
4	The engineer should use the CCTV system to check the safety of the engine room.
5	**WARNING** ✋ The Auragen Generators are belt-driven and operate at a high speed. DO NOT touch the Auragen Generators, drive belts, or drive components during engine operation. If it is safe to enter, conduct visual inspection of the generators, associated cabling and generator drive systems.

Draft
Further dissemination only as directed by Commandant (CG-937) or higher Coast Guard authority.

Step	Action
6	When required, engineer should secure all non-vital equipment at the 24-VDC Distribution Panels and the 12-VDC Distribution Panel.
7	When required, engineer should place the Automatic Charge Relay Switch at the Primary Crew Console in the "ON" position, cross-connecting the main engine and house batteries.
8	If the cause is not correctable or cannot be identified, engineer should determine extent of power loss and impact on current mission.
9	Notify station of situation and current status.

Draft
Further dissemination only as directed by Commandant (CG-937) or higher Coast Guard authority.

Section B.15. Unusual Noise or Vibration in Powertrain

Unusual Noise or Vibration in Powertrain

Symptoms

1. Unusual noise from Engine/Reduction Gear, shaft, or waterjet.
2. Unusual vibrations.

Actions

If unusual noise or vibration is detected by the crew, take the following actions:

Step	Action
1	The coxswain should bring the joystick to the center position to reduce RPMs and determine which powertrain is affected, immediately secured the affected engine,and inform the crew.
2	The engineer should view the engine room the camera at the Primary Crew Console to ensure it is safe to enter.
3	If it is safe to enter, check the affected powertrain for any unusual conditions and check oil sumps for quantity.
4	If the cause is not correctable or cannot be identified, do not restart the engine.
5	Notify station of situation and current status.

Draft
Further dissemination only as directed by Commandant (CG-937) or higher Coast Guard authority.

Draft
Further dissemination only as directed by Commandant (CG-937) or higher Coast Guard authority.

Section B.16. Communication/Navigation Systems Power Failure

Communication/ Navigation Systems Power Failure

Symptoms

Communication/Navigation System(s) fail to operate properly.

1. VHF.
2. UHF.
3. HF-SSB
4. Crew Communications.
5. RDF.
6. Radar.
7. GPS/DGPS.

Actions

If one or more communication/navigation systems fails to operate properly, take the following actions:

Step	Action
1	Coxswain notify and direct the crew to investigate the casualty.
2	Verify power panel bus voltage using console multi-meters. • 24P1 24VDC Vital Buss. • 24P3 24VDC Non-Vital Buss. • 12P1 12VDC Buss.
3	Check the position of feeder breakers and circuit breakers on distribution panels for all affected equipment.
4	Crewmembers report all findings to the coxswain.
5	Engineer determine impact on current mission and make recommendation to Coxswain.

Draft
Further dissemination only as directed by Commandant (CG-937) or higher Coast Guard authority.

Step	Action
6	Notify station of situation and report status to the Operational Commander.

Draft
Further dissemination only as directed by Commandant (CG-937) or higher Coast Guard authority.

Appendix A. Outfit and Stowage Plan

Introduction

This appendix is the standard stowage plan for the 45FT RB-M outfit. No deviation from this list is authorized, except in the event that the addition of portable equipment, not part of the standard boat outfit, is necessary to meet local mission needs; units are authorized to temporarily carry this extra equipment.

This authorization is on case by case basis only, and care must be taken to properly secure any extra gear and to ensure it does not interfere with safe egress or the boat's standard outfit/systems. Under no circumstances shall permanent alterations be made to power, stow or in any way accommodate extra equipment.

In this Appendix

This appendix contains the outfit list and stowage plan for the following areas of the 45FT RB-M:

1. Forepeak
2. Survivors' Compartment
3. Head
4. Pilothouse
5. Main Deck
6. Lazarette

FOREPEAK		
OUTFIT ITEM	**QTY**	**LOCATION**
Mooring Lines; 2 3/4" (Cir) DBN 30'	2 ea	Forepeak
Mooring Lines; 2 3/4" (Cir) DBN 60'	2 ea	Forepeak
Mooring Lines; 1 1/2" Cir) 1/2" (Dia) - 200'	2 ea	Forepeak
Fenders; Cylindrical; Color White; Tag Lines	4 ea	Forepeak
Drogue; Small w/ Flotation Bag	1 ea	Forepeak

Draft
Further dissemination only as directed by Commandant (CG-937) or higher Coast Guard authority.

FOREPEAK		
OUTFIT ITEM	**QTY**	**LOCATION**
Snap Hook / Clip	1 kt	Forepeak
Anchor Line; DBN 2 3/4" (Cir) 7/8" (Dia)	300 ft	Forepeak

SURVIVORS' COMPARTMENT		
OUTFIT ITEM	**QTY**	**LOCATION**
Stokes Litter W/ Flotation - Folding	1 ea	Top STBD Fwd Side Cabinet
Medevac Board; Folding	1 ea	Top STBD Fwd Side Cabinet
Boat Crew Survivor Mess Vests	1 ea	Lower Fwd Port Cabinet
Pyrotechnics Pelican Storage Container	1 ea	Upper Fwd Port Cabinet
Hearing Protection; Foam Insert; Disposable	1 box	STBD Fwd Side Cabinet
Blankets, Wool	2 ea	STBD Fwd Side Cabinet
Pillows	2 ea	STBD Fwd Side Cabinet
Push Button Portable Signal Horn; 8oz	1 ea	STBD Fwd Side Cabinet
Spare 8oz Propellant for Portable Horn	1 ea	STBD Fwd Side Cabinet
Swimmer Harness 70' Line	1 ea	STBD Fwd Side Cabinet
First Aid Kit; 10 Person	1 ea	STBD Fwd Side Cabinet
Personnel Retrieval Strap	1 ea	STBD Fwd Side Cabinet
P6; Firefighting Hose; 50'	1 ea	STBD Fwd Side Cabinet
P6; Firefighting Nozzle	1 ea	STBD Fwd Side Cabinet

Draft
Further dissemination only as directed by Commandant (CG-937) or higher Coast Guard authority.

SURVIVORS' COMPARTMENT			
OUTFIT ITEM		**QTY**	**LOCATION**
P6; Quick Connection Coupling		1 ea	STBD Fwd Side Cabinet
Blankets, Emergency		2 ea	EMT Kit
Searchlight; Portable		1 ea	Sink Cabinet
Paper Towels		1 roll	Galley
Medium duty wipes		1 bx	Sink Cabinet
Ground Wand (Helo Ops)		1 ea	Head Jointer Bulkhead
Ground Wand Clip		1 ea	Head Jointer Bulkhead
Damage Control Kit Bag (Only)		1 ea	Removable Deck Plate #3
Spare Part Box		1 box	Removable Deck Plate #2
	Fuel Filters	2 of ea type	
	Fuses	2 of ea type	
	Rubber Impellers	2 of ea type	
	Incandescent Light Bulbs	2 of ea type	
	Utility hand pump	1 ea	
	Funnel	1 ea	
Tool Box		1 ea	Under Ladder

HEAD		
OUTFIT ITEM	**QTY**	**LOCATION**
Handi-Wipes	2 pkg	Head
Medium Duty Wipes	1 box	Head
Toilet Paper	1 roll	Head
Personal Flotation Device; Type 1 Adult	5 ea	Head
Personal Flotation Device; Type 1 Child	2 ea	Head
Boat Crew Safety Belts; HW	4 ea	Head
Boat Crew Safety Helmets	3 ea	Head

Draft
Further dissemination only as directed by Commandant (CG-937) or higher Coast Guard authority.

HEAD			
OUTFIT ITEM		**QTY**	**LOCATION**
Boat Crew Goggles		3 ea	Head
Towing Pelican Storage Container		1 ea	Head
	Shackle Galvanized; 1 1/4"	1 ea	
	Nylite Shackle; Towing Size 4-Orange	1 ea	
	Folding Grapnel; 7lbs	1 ea	

PILOTHOUSE		
OUTFIT ITEM	**QTY**	**LOCATION**
Flashlights, Pelican Non-Explosive	2 ea	Pilothouse
Batteries; 'C' Cell Alkaline	6 ea	Pilothouse
Binocular; 7X50 Marine waterproof	1 ea	Pilothouse
Knife With Case	1 ea	Pilothouse
Hearing Protection; Ear Muff Style	2 ea	Pilothouse
Engine Hatch; Dogging Wrench	2 ea	Pilothouse
Navigation Mess Pouch	1 ea	Pilothouse
RB-M Operator's Handbook	1 ea	Pilothouse; Pouch
Navigational Rules; International/Inland	1 ea	Pilothouse; Pouch
Parallel Plotter	1 ea	Pilothouse; Pouch
Dividers	1 ea	Pilothouse; Pouch
Slide Rule Nautical	1 ea	Pilothouse; Pouch

Draft
Further dissemination only as directed by Commandant (CG-937) or higher Coast Guard authority.

MAIN DECK		
OUTFIT ITEM	**QTY**	**LOCATION**
Ensign, National (16"x24")	1 ea	Mast
Ensign, U.S. Coast Guard (15"X24")	1 ea	Mast
Boat Hook Mounting Clamps	2 sets	Port and Starboard Side of the Pilothouse
Telescoping Boat Hooks. 8'	2 ea	Port and Starboard Side of the Pilothouse
30" Life Ring Buoy; Lifesaving	2 ea	Aft Deck, Port and Starboard Life Rails
Anchor	1 ea	Atop the Survivor's Cabin (port side)
Light Marker Distress; SM2	2 ea	Aft Deck, Port and Starboard Life Rails
Snap Hook for attaching Light Lanyard	2 ea	Aft Deck, Port and Starboard Life Rails
Throw Bag; 75' Line	2 ea	Aft Deck, Port and Starboard Life Rails
Snap Hook for Throw Bags	2 ea	Aft Deck, Port and Starboard Life Rails
Heaving Line W/ Bag; 100' Line	1 ea	Aft Deck
Tow Line; DBN 2 3/4" (Cir) 7/8" (Dia)	600 ft	Tow Reel
Towline Reel	1 ea	Aft Deck

LAZARETTE		
OUTFIT ITEM	**QTY**	**LOCATION**
P-6 Standpipe Connection Hose; 6'	1 ea	Lazarette
Heaving Line W/ Bag; 100' Line	2 ea	Lazarette

Draft
Further dissemination only as directed by Commandant (CG-937) or higher Coast Guard authority.

Draft
Further dissemination only as directed by Commandant (CG-937) or higher Coast Guard authority.

Appendix B. Engineering Changes

Introduction

This appendix contains a list of authorized Engineering Changes (ECs) for the 45FT RB-M.

Engineering Changes

Engineering Change Number	Subject	Date

Draft
Further dissemination only as directed by Commandant (CG-937) or higher Coast Guard authority.

Draft
Further dissemination only as directed by Commandant (CG-937) or higher Coast Guard authority.

Appendix C. Disabling Casualties

Introduction

This appendix contains disabling casualties for the 45FT RB-M. Refer to Chapter 5, Section A, for steps to follow if any of these casualties occur.

This appendix contains the following sections:

- Engine Parameters
- Engineering System Components
- Electronic/Navigation
- Safety
- General Materiel

Engine Parameters

- Reduction gear pressure below 205 PSI (while engaged).
- Engine lube oil pressure below 5 PSI at cruising speed (1850 RPM).
- Engine fresh water temperature below 170° F or above 210° F.

Engineering System Components

- Engine fails to start.
- Uncontrollable overheat.
- Metallic/non-metallic noise: metal on metal/fuel-knock/bearing/clicking.
- Excessive shaft or engine vibration.
- Engine surging/over speed (over 50 RPM).
- Loss of engine RPM control.
- Reduction gear fails to engage (forward or reverse).
- Fuel oil dilution 2.5% or above.
- Water in engine lube oil (emulsified white milky oil).
- Lube oil in engine jacket water:
    - More than a light sheen.
    - Floating unmixed lube oil separated from the water.

Draft
Further dissemination only as directed by Commandant (CG-937) or higher Coast Guard authority.

- Battery(ies) will not charge or hold a charge.
- Both Auragen units fail.
- Continuous electrical breaker trip.
- Complete steering system inoperative.
- Engine motor-mount hardware loose or missing.
- Waterjet bearing housing inspection hole leak:
  - Any oil coming from inspection hole.
  - Water coming from inspection hole (more than a few drops).
- Waterjet:
  - Any water or oil leaking from bearing housing tell-tale drain.

Electronic/ Navigation

- No electronic means of signaling distress (i.e. no radio etc.).
- Electronics won't energize.

Safety

- Any fuel oil or lube oil dripping* on a hot surface (hot surface is defined as a surface greater than 400° F, even if covered by insulation).
- Electrical arcing and sparking.
- Turbo-charger lube oil supply line leaking on to hot surface or not fire rated/ fire sleeved.
- Fixed (FM-200) fire fighting system inoperative, PLUS no portable fire extinguishers (unserviceable).
- Emergency alarms and indicator lights, where applicable, inoperative (fire, bilge, hydraulic, lube oil pressure, high water temp).

* To determine if fuel oil or lube oil dripping is occurring, a clean sheet of paper may be placed under a suspected leak to collect and detect any drops that fall.

General Materiel

- Hull breach below the waterline.
- Inoperative (open/closed) sea-chest valve, fuel shut off valve, engine shut down damper, or engine room air damper.

Draft
Further dissemination only as directed by Commandant (CG-937) or higher Coast Guard authority.

Draft
Further dissemination only as directed by Commandant (CG-937) or higher Coast Guard authority.

Draft
Further dissemination only as directed by Commandant (CG-937) or higher Coast Guard authority.

Appendix D. Restrictive Discrepancies

Introduction	This appendix contains restrictive discrepancies for the 45FT RB-M. Refer to Chapter 5, Section A, for steps to follow if any of these casualties occur.
Restrictive Discrepancies	Engine and Vessel Systems

- Engine performance:
  - Maximum RPM under load (norm 2300-2350) – less than 2300 RPM.
  - Engine fresh water temperature below 210° F and above 192° F.
- Leaks more than 15 drops per minute:
  - Jacket Water
  - Raw Water
  - Lube Oil
  - Hydraulic Oil
  - Reduction Gear Oil
- Fuel oil dripping* (falling onto a surface which is not hot). One drop within ten (10) minutes.
- Bilge pumps inoperative.
- Bilge system check valves installed improperly or unserviceable.
- Inaccurate pressure/temperature/fire alarms.
- Any detectable exhaust leaks.
- Missing exhaust lagging or system blankets.
- Failure of any emergency system:
  - Fuel shut-off valves do not fully close.
  - Engine blower shutdown is inoperative (electronic or manual).
  - Engine room air dampener shutdown system.

Draft
Further dissemination only as directed by Commandant (CG-937) or higher Coast Guard authority.

- DDEC Emergency Back-up Panel.

- Loose/missing fittings, nuts, bolts, brackets, etc.:
  - Missing or loose shafting bolts:
    - Torsional coupling
    - Cardan shaft
    - Gear output flange
    - Spacer

- Undersized engine mounting bolts and/or constructed of inferior grade material.
- Battery boxes missing or not secured properly.
- Unauthorized batteries.

* To determine if a fuel oil dripping is occurring, a clean sheet of paper may be placed under a suspected leak to collect and detect any drops that fall.

Boat Outfit

- Fire extinguishers not secured in brackets.
- Loose/missing fittings, nuts, bolts, brackets, etc.:
  - Missing/loose/undersized coxswain chair mounting hardware.
  - Mast support bracket loose/missing.

- Underweight fire extinguishing bottle.
- FM-200 system pressure switches not operating properly.
- Missing boat crew survival vest.
- Missing boat pyrotechnics.
- Portable dewatering pump kit incomplete/inoperative/missing.
- Towline less than 100’ of required length.

Electronics/Navigation

- Compass:

Draft
Further dissemination only as directed by Commandant (CG-937) or higher Coast Guard authority.

- Deviation table missing.
- Compass deviation greater than 5 degrees.

- Electronics:
  - VHF-FM radio inoperative.
  - Depth sounder inoperative.
  - DGPS/GPS inoperative.
  - Radar inoperative.

General Materiel and Safety

- Water Tight Integrity:
  - Holes/cracks in a watertight structure.
  - Cracks through a watertight scuttle/hatch.
  - Any noticeable gap at gasket seams.

- Applied non-skid on main decks ineffective/missing (any traffic/working area without non-skid for an 8.5” X 11” area).
- Navigation light/s inoperative.

Draft
Further dissemination only as directed by Commandant (CG-937) or higher Coast Guard authority.

Draft
Further dissemination only as directed by Commandant (CG-937) or higher Coast Guard authority.

Appendix E. Major Discrepancies

Introduction	This appendix contains major discrepancies for the 45FT RB-M. Refer to Chapter 5, Section A, for steps to follow if any of these casualties occur.
Major Discrepancies	Engine and Vessel Systems

- Leaks less than 15 drops per minute:
  - Jacket Water
  - Raw Water
  - Lube Oil
  - Hydraulic Oil
  - Reduction Gear Oil
- Any fuel leak (piping/fittings/tank) that drips less than one drop within ten minutes.
- Bilge pump hoses missing hose clamps.
- Loose/missing fittings, nuts, bolts, brackets, etc.*
  - Hardware on the engines used for attaching equipment.
  - Battery terminals loose or corroded.
  - Autopilot pump mounting hardware.
  - DDEC cables loose or disconnected.

  * For fasteners utilizing nyloc nuts, the bolt must engage and pass through the nylon insert, but not more than five threads.
- Flexible hoses and gauge lines used for petroleum based products not either fire rated or fire sleeved (fire sleeve properly banded at both ends).
- Fluid levels below minimum required.
- Engine guards inadequate/missing around moving machinery.
- Protruding exhaust lagging securing wire.

Draft
Further dissemination only as directed by Commandant (CG-937) or higher Coast Guard authority.

- Any standard boat machinery, with the exception of those listed on the disabling or restrictive list, not operating properly.

Electronics/Navigation

- Compass light inoperative.
- Expired deviation table.
- Any standard boat electronics, with the exception of those listed on the restrictive list, not operating properly.

General Materiel and Safety

- Watertight Integrity:
  - Improperly filled holes.
  - Hardware bolted through a watertight hatch, scuttle, or bulkhead.
  - Loose dogs/dogging arms on watertight hatch, scuttle, or bulkhead.
  - Failure of a watertight closure to seal.
- Scuttle not flush with the deck, causing a tripping hazard.
- Inability to open or close doors, hatches, or scuttles.
- Hatch and scuttle safety locks do not engage when item is in the open position.
- Missing breaker or open hole in any power distribution panel.
- Any standard boat machinery or system, with the exception of those listed on the disabling or restrictive lists, not operating properly.

Draft
Further dissemination only as directed by Commandant (CG-937) or higher Coast Guard authority.

Appendix F. Full Power Trial

Introduction

This appendix contains the full power trial requirements for the 45FT RB-M to ensure that the boat operates to prescribed standards.

In this Appendix

This appendix contains the following information:

- Conducting a Full Power Trial

Conducting a Full Power Trial

Follow these procedures when conducting a full power trial.

Step	Action
1	Get the boat underway for a ten (10) minute transit on a relatively straight course. Bring the engine up to full speed.
2	After approximately eight (8) minutes, check engine speed on the EDM. Normal engine speed range is 2200-2300 RPM.
3	Check for the following abnormalities, which occasionally occur during the full power trial: • Any fuel or lube oil dripping* on a hot surface is a disabling casualty (hot surface is defined as a surface greater than 400° F, even if covered by insulation). • The turbocharger lube oil supply hose leaking on to a hot surface or not fire rated or fire sleeved is a disabling casualty. • Any fuel oil drop* falling within 10 minutes, not on a hot surface, is a restrictive discrepancy. • Any anti-freeze, raw water, lube oil, or hydraulic oil leaks greater than 15 drops per minute are a restrictive discrepancy. • Any anti-freeze, raw water, lube oil, or hydraulic oil leaks less than 15 drops per minute is a major discrepancy.

Draft
Further dissemination only as directed by Commandant (CG-937) or higher Coast Guard authority.

Step	Action
	• Any fuel oil leak on the fuel tank access covers greater than 1 drop in 10 minutes is a restrictive discrepancy. * To determine if any drop(s) have occurred, a clean sheet of paper may be placed under a suspected leak for up to ten minutes to collect and detect any drops that fall.

NOTE

The following parameters coincide with the Standardization Program

Allowable Ranges and Results

Categories	Disabling	Restrictive	Major	Normal	Major	Restrictive	Disabling
Oil Pressure	< 5			5-28			
Water Temp.	< 140			170-210	211-215	216-220	> 220
Red. Gear Pressure (engaged)	< 205			205-265			> 265
Red. Gear Pressure (disengaged)	< 15			15-23			> 23
Engine RPM		< 2200		2200-2300			

Draft
Further dissemination only as directed by Commandant (CG-937) or higher Coast Guard authority.

Appendix G. List of Acronyms

Acronym List

AIS	Automatic Identification System
AMS	Auxiliary Machinery Space
AUX	Auxiliary
BCMP	Boat Class Maintenance Plan
BIT	Built In Test
CAC	Charge Air Cooler
CASREP	Casualty Report
CB	Circuit Breaker
CO	Commanding Officer
COMDTINST	Commandant Instruction
CSIM	Control Station Interface Module
DBN	Double-Braided Nylon
DCV	Directional Control Valve
DDEC	Detroit Diesel Electronically Controlled
DEMP	Diesel Engine Maintenance Program
DGPS	Differential Global Positioning System
DIST	Distribution
DIW	Dead-in-the-Water
EC	Engineering Change
ECI	Electronic Control Injectors
ECM	Engine Control Module
ECN	Engineering Change Notice
ECR	Engineering Change Request
ECU	Electronic Control Unit
EDM	Electronic Display Module
EGIM	Electronic Gear Interface Module
EGT	Exhaust Gas Temperature
ELC	Engineering Logistics Center
EMI	Electro-Magnetic Interference
EPIRB	Emergency Positioning Indicating Radio Beacon

Draft
Further dissemination only as directed by Commandant (CG-937) or higher Coast Guard authority.

EPO	Engineering Petty Officer
ER	Engine Room
ERIM	Engine Room Interface Module
ESD	Electronic Support Detachment
EUI	Electronic Unit Injectors
EWRS	Emergency Window Release System
FF	Fire Fighting
FLOCS	Fast Lubricating Oil Change System
FSD	Field Support Desk
FWD	Forward
GEN	Generator
GMDSS	Global Maritime Distress & Safety System
GPH	Gallons Per Hour
GPM	Gallons Per Minute
GPS	Global Positioning System
HM&E	Hull, Mechanical and Electrical
HVAC	Heating, Ventilation, Air Conditioning
HYD	Hydraulic
IAW	In Accordance With
ICS	Inverter Charging System
IETP	Interactive Electronic Technical Publication
IPB	Illustrated Parts Breakdown
ISM	Integrated System Model
JW	Jacket Water
LAZ	Lazarette
MDE	Main Diesel Engine
MECL	Master Equipment Configuration List
MLB	Motor Lifeboat
MPC	Maintenance Procedure Card
MWO	Master Work Order
NAV	Navigation
NM	Nautical Mile

Draft
Further dissemination only as directed by Commandant (CG-937) or higher Coast Guard authority.

NMLBS	National Motor Lifeboat School
NSN	National Stock Number
OIC	Officer-in-Charge
O-Level	Organizational Level
OPTEMPO	Operational Tempo
OT&E	Operational Test and Evaluation
PFD	Personal Flotation Device
PLTHS	Pilothouse
PMS	Preventive Maintenance System
PRPLN	Propulsion
PSI	Pounds Per Square Inch
PSS	Port Safety and Security
PTT	Push To Talk
PWR	Power
QA	Quality Assurance
QAWTD	Quick Acting Water Tight Door
QAWTH	Quick Acting Water Tight Hatch
R/G	Reduction Gear
R/W	Raw Water
RADHAZ	Radiation Hazard
RB-M	Response Boat - Medium
RDF	Radio Direction Finder
RFD	Request for Deviation
RFO	Ready for Operation
RPM	Revolutions Per Minute
RSQ-SRVL	Rescue and Survival
S&TE	Support and Test Equipment
SAR	Search and Rescue
SHIP-SVC-PWR	Ship Service Power
SINS	Scalable Integrated Navigation System
SOP	Standard Operating Procedure
SSB	Single Sideband
STBD	Starboard
STD	Standard
SURV COMP	Survivors' Compartment

Draft
Further dissemination only as directed by Commandant (CG-937) or higher Coast Guard authority.

TPDR	Technical Publication Deficiency Report
TRS	Technical Repair Standard
UHF	Ultra High Frequency
USCG	United States Coast Guard
VAC	Volts Alternating Current
VDC	Volts Direct Current
VHF	Very High Frequency
WAAS	Wide Area Augmentation System
WO	Work Order
WTD	Water Tight Door
XO	Executive Officer

Draft
Further dissemination only as directed by Commandant (CG-937) or higher Coast Guard authority.