U.S. Department of Homeland Security
United States Coast Guard

Commandant
United States Coast Guard

2100 Second Street, S.W.
Washington, DC 20593-0001
Staff Symbol: G-MSE-3
Phone: (202) 267-2206
Fax: (202) 267-4816

COMDTNOTE 16000

SEP 29 2004

COMMANDANT NOTICE 16000

CANCELLED: SEP 28 2005

Subj: CH-3 TO COMDTINST M16000.9, MARINE SAFETY MANUAL, VOLUME IV – TECHNICAL, CHAPTER 3 – ENGINEERING SYSTEMS

1. PURPOSE. This Notice publishes a change to the Coast Guard Marine Safety Manual, Volume IV, Chapter 3.

2. ACTION. Area and district commanders, commanders of maintenance and logistics commands, and commanders of Headquarters units shall ensure compliance with the provisions of this Notice. No paper distribution will be made of this Notice. Official distribution will be via the Coast Guard Directives System CD. An electronic copy will be made available via the following web sites:

   a. The Coast Guard Directives System on the Coast Guard web: http://cgweb.uscg.mil/g-c/g-ccs/g-cit/g-cim/directives/welcome.htm

   b. The Coast Guard Directive System on WWW: http://www.uscg.mil/ccs/cit/cim/directives/welcome.htm

   c. An electronic version will also be available via the Coast Guard Marine Safety, Security and Environmental Protection web site: http://www.uscg.mil/hq/g-m/index.htm

3. SUMMARY. The revised Chapter 3, Engineering Systems, cancels the existing chapter and provides updated information on electrical and mechanical systems related to the marine safety program. Section A of the revised chapter contains a summary of specific alterations.

DISTRIBUTION – SDL No. 141

	a	b	c	d	e	f	g	h	i	j	k	l	m	n	o	p	q	r	s	t	u	v	w	x	y	z
A																										
B		8	*		5									150	1	1	2									5
C					*							1	*													
D	1	2*		1*	1						1*	*														
E														2	*											
F			1																							
G																										
H																										

NON-STANDARD DISTRIBUTION: (see page 2 and 3)

4. PROCEDURES. Remove and insert the revised Chapter 3 and its table of contents as well as the updated Volume IV table of contents.

5. ENVIRONMENTAL ASPECT AND IMPACT CONSIDERATIONS. Environmental considerations were examined in the development of this directive and have been determined to be not applicable.

6. FORMS/REPORTS. None.

T. H. GILMOUR /s/
Rear Admiral, U.S. Coast Guard
Assistant Commandant for Marine Safety,
Security and Environmental Protection

Non-Standard Distribution:

B:c CCGD8 (14); CCGD7 (11); CCDG13 (9); CCGD9 (8); CCGD5 (7); CCGD1 (6); CCDG11 (5) CCDG14 (4); MLCLANT, MLCPAC (1)

C:e New Orleans (90); Morgan City (30); San Francisco (25); Baltimore, Galveston (22); Mobile (19); Boston (18); Hampton Roads (17); Portland OR, Honolulu (16); Miami (15); Anchorage (13); Chicago, Corpus Christi, Houston (12); Jacksonville, Los Angeles/Long Beach (11); Puget Sound, Philadelphia, Guam (10); Savannah (9); Paducah, St. Louis, Providence, Wilmington, Port Arthur, San Juan (8); Memphis, Pittsburgh (7); Portland ME, Tampa, Buffalo, San Diego, Juneau (6); Duluth, Detroit, Toledo, Valdez (5); Cleveland, Huntington, Louisville, Milwaukee, Sault Ste. Marie (4); Charleston (3)

C:m New York (70); Sturgeon Bay (4)

D:b National Strike Force Coordination Center (1)

D:d New Orleans (12); New York (6) (extra)

D:k New York (3); Jacksonville, New Orleans, Houston, San Francisco (1) (extra)

D:l CG Liaison Officer MILSEALIFTCOMD (code N-7CG), CG Liaison Officer RSPA (DHM-22), CG Liaison Officer MARAD (MAR-742), CG Liaison Officer JUSMAGPHIL, CG Liaison Officer ABS, Maritime Liaison Office Commander U.S. Naval Forces Central Command (1)

E:o New York (15); Grand Haven (4); Long Island Sound, Sault Ste. Marie (2)

ABS (8)
DOJ Torts Branch (Washington, DC; New York; San Francisco only) (1)
MARAD (MRG 4700) (1)
MSC (M-24) (1)
NOAA Fleet Inspector (1)
NTSB (Marine Accident Division) (2)
World Maritime University (2)
U.S. Merchant Marine Academy, Kings Point, NY (1)

This page intentionally left blank.

U.S. Department of Transportation
United States Coast Guard

Commandant
United States Coast Guard

Commandant (G-MP-4)
United States Coast Guard
MAILING ADDRESS
U.S. Coast Guard
Washington, DC 20593-0001
(202) 267-0490

COMDTNOTE 16000
24 SEP 1990

COMMANDANT NOTICE 16000 CANCELLED: 22 MAR 1991

Subj: CH-2 to CONDTINST M16000.9, Marine Safety Manual, Volume IV - Technical

1. PURPOSE. This Notice provides changes to subject manual.

2. SUMMARY OF CHANGES. Chapter 2 has been revised to reflect software conversion, development, and procurement since the Marine Safety Center opened. Chapter 6 has been updated to increase productivity. Substantive changes have been marked with a vertical line; editorial changes are not marked. In addition to completely revised chapter 2, the following substantive changes have been made:

   a. G-MTH-5 has been changed to G-MTH-3 in paragraphs 1.B.1.d, 6.A.1, and 6.F.3.c. (1).

   b. Paragraph 6.A.1 has been rewritten to incorporate new G-M office title to Office of Marine Safety, Security and Environmental Protection.

   c. Paragraph 6.A.2.c has been updated by removing NVIC 5-85 and adding post-85 NVIC's.

   d. Paragraph 6.A.4 adds a list of research and technical papers.

   e. Paragraph 6.B.5 has been updated to detail free surface method of calculation.

   f. Paragraph 6.C.1.b has been changed to read that the MSC Cargo Division reviews tank barges.

   g. Paragraph 6.C.1.b.(5) adds standard items to include in all stability letters or booklets.

   h. Paragraph 6.C.2 is revised to remove the 90 day standard for temporary stability letter and also clarifies owner's responsibility to get permanent stability letter.

2. i. Paragraph 6.C.3 adds discussion of onboard computers used to calculate stability.

   j. Paragraph 6.C.4 adds information on capabilities of operational personnel and stability guidance.

   k. Paragraph 6.D.2.a adds large ship tolerance for sister status.

   l. Paragraph 6.D.2.c.(3) clarifies hydrostatic data for trim at inclining.

   m. Paragraph 6.D.2.c.(6)(g) documents lightship outfitting at inclining.

   n. Paragraph 6.D.3.b limits pontoon test to 2 pontoons.

   o. Paragraph 6.D.3.c is added to discuss SOLAS exemptions.

   p. Paragraph 6.D.4 adds an evaluation of weight changes to lightship.

   q. Paragraph 6.E.2 details Voith-Schneider tripping method.

   r. Paragraph 6.E.3.c has been updated by adding paragraphs (6), (7), (8), and (9) to include squaresail detail and downflooding versus 60 degrees.

   s. Paragraph 6.E.3.d is added with bare pole criteria for certain small auxiliary sailing vessels.

   t. Paragraphs 6.E.4.e-g add information on cos for ship-shapes, wind tunnels, and critical azimuth.

   u. Paragraph 6.E.5.a adds information on MSC possible requirements for deadweight surveys.

   v. Paragraph 6.E.5.b.(1) has been updated to clarify intact energy requirements for route/vessel.

   w. Paragraph 6.E.5.b.(2) adds tank barge criteria.

   x. Paragraph 6.E.5.b.(3)(d) and (e) put damage in vessel type.

   y. Paragraph 6.E.5.b.(4) adds definition of non-shifting dry cargo.

   z. Paragraph 6.E.5.b.(5) clarifies deck cargo barge.

   aa. Paragraph 6.E.5.b.(5)(b) clarifies deck cargo barge VCG assumption.

   bb. Paragraph 6.E.5.b.(6)(d) adds reduced freeboards and hatch cover exemption.

   cc. Paragraph 6.E.5.c adds SOLAS requirements for collision bulkheads on barges.

   dd. Paragraph 6.E.6.d adds damage stability criteria on bulk carriers.

2. ee. Paragraph 6.E.7.c.(4) provides units on scales of Figure 6-13; figure 6-15 is replaced with a clearer version.

ff. Paragraph 6.E.9.d is added to discuss assumptions for calculations/tests.

gg. Paragraph 6.E.9.e is added on subdivision calculations.

hh. Paragraph 6.E.9.f is added to discuss foam flotation.

ii. Paragraph 6.E.9.g is added on collision bulkheads - passenger vessel location.

jj. Paragraph 6.E.9.h is added to discuss ballast on passenger vessels.

kk. Paragraph 6.E.9.i is added on watertight doors in watertight bulkheads.

ll. Paragraph 6.E.9.J is added to discuss the use of simplified tests as equivalents to calculations.

mm. Figure 6-20.5 is added.

nn. Paragraph 6.E.10 is added on uninspected vessel criteria.

oo. Paragraph 6.E.11 is added on lifting criteria details.

pp. Paragraph 6.E.12 is added on multi-hull criteria.

qq. Paragraph 6.E.13 is added on watertight doors in non-subdivision bulkheads.

rr. Paragraph 6.E.14 is added on controlled downflooding.

ss. Paragraph 6.E.15 is added on passenger vessel stability after damage, stepped bulkheads on passenger vessels, margin line submergence, and passenger vessel residual stability.

tt. Paragraph 6.E.16 is added on ER at risk, ABS calculated outflow, and segregated ballast tank/clean ballast tank requirements.

uu. Paragraph 6.E.17 is added on damage length with underwater projections.

vv. Paragraph 6.E.18 is added on lifeboats.

ww. Paragraph 6.E.19 is added on fishing vessels.

xx. Paragraph 6.E.20 is added on intact righting energy and equivalents.

yy. Paragraph 6.E.21 is added on dynamically supported craft criteria.

zz. Paragraph 6.J is rewritten and updated.

3. ACTION.

a. Remove and insert the following pages:

Remove	Insert
CONTENTS I through II	CONTENTS I through II, CH-2
FIGURES I through III	FIGURES I through III, CH-2
Page 1-1 through 1-2	Pages 1-1 through 1-2, CH-2
Page 2-i through 2-7	Page 2-i through 2-12, CH-2
Page 6-i through 6-95	Page 6-i through 6-122, CH-2

b. Make the following pen-and-ink change to page 2 of Form CG-5122: Change (G-MP-3) to (G-MP-4).

c. Make the appropriate entry on the Record of Changes page.

/s/ J. D. SIPES
Rear Admiral, U.S. Coast Guard
Chief, Office of Marine Safety,
Security and Environmental
Protection

Encl: (1) CH-2 to COMDTINST M16000.9

Non-Standard Distribution:

B:c CCGD9, 13 (15); CCGD8 (14); CCGD7 (11); CCGD2 (10); CCGD5 (7); CCGD1, 17 (6); CCGD11 (5); CCGD14 (4); MLCPAC, MLCLANT (1).

C:e New Orleans (90); San Francisco (42); Puget Sound (40); Morgan City (30); Long Beach (27); Baltimore (22); Anchorage (20); Mobile (18); Portland OR, Galveston, Hampton Roads, Honolulu (16); Miami, Boston (15); Port Arthur (13); Jacksonville (11); San Diego, Philadelphia, Tampa, Guam (10); Savannah, Duluth (9); Paducah, St. Louis, Chicago, Louisville, Wilmington (8); Memphis, Portland ME, Pittsburgh, Cleveland (7); San Juan, Buffalo, Juneau (6); Detroit, Providence, Corpus Christi, Toledo, Huntington, Valdez (5); Charleston, Milwaukee (4).

C:m New York (75); Houston (19); St. Ignace (4); Sturgeon Bay (3).

D:d New Orleans (12); New York (6) (extra).

D:k New York (3); Jacksonville, New Orleans, Houston, San Francisco (1) (extra).

D:l CG Liaison Officer MILSEALIFTCOM (Code M-4E4), CG Liaison Officer RSPA (DHM-22), CG Liaison Officer HARAD (MAR-720.2), CG Liaison Officer American Samoa, CG Advisor NWC, CG Advisor Panama Canal Commission, CG Liaison Officer JUSMAGPHIL (1).

E:o New York (15); Houston (12); Muskegon (4); Long Island Sound (3); Sault Ste. Marie (1).
ABS (2).
DOJ Torts Branch (Washington, DC; New York; San Francisco only) (1).
MARAD (MRG 4700) (1).
Msc (M-24) (1).
NOAA Fleet Inspector (1).
NTSB (Marine Accident Division) (2).
World Maritime University (2).

Commandant (G-MP-3)
United States Coast Guard

MAILING AODRESS:
Washington, DC 20593
Phone: 202-426-2298
COMDTNOTE 16000
27 JUN 1986

COMMANDANT NOTICE 16000

CANCELLED: 26 DEC 1986

Subj: CH-1 To Volume IV - TECHNICAL - Marine Safety Manual, COMDTINST M16000.9

1. PURPOSE. This Notice changes Volume IV, TECHNICAL, of the Marine Safety Manual (MSM) by revising Chapters 1 through 6.

2. SUMMARY OF CHANGES. Field technical offices have been consolidated into the Marine SafetY Center (MSC) in Washington, DC. All MSM references to district (mmt) offices (except historical) have been changed to reflect this. Substantive changes have been marked with a vertical line; editorial changes are not marked. In addition to MSC references, the following substantive changes have been made:

   a. Suggestion For Improving The Marine Safety Manual, COMDTINST M16000 Series, Form CG-5122, has been Included.

   b. Record of Changes page has been added.

   c. The Master Table of Contents now Lists the Headquarters staff symbol and telephone number of the branch primarily responsible for the information provided in that chapter.

   d. Commandant (G-MTH-1) and (G-MTH-3) have been consolidated into Commandant (G-MTH-1), Hazardous Materials Branch; all MSM references have been changed accordingly.

   e. Navigation and Vessel Inspection Circular (NVIC) 6-79 was superseded by NVIC 8-84; all MSM references have been changed accordingly.

   f. Paragraph 3.D.3 has been rewritten to update acceptable construction standards for shipboard electrical cable.

   g. Subparagraph 3.F.4.c has expanded the description of approved hand electric flashlights for merchant vessels.

2. h. Subparagraph 3.I.1.b has been rewritten to reflect the new approval process for boilers and thermal fluid heaters (TFH's).

   i. Subparagraph 3.I.3.d updates the plan review procedure for automatic control systems.

   j. Subparagraph 3.I.3.f, "Changes In The Approval Process," has been deleted.

   k. Paragraph 3.I.10, "Foreign Manufacturers Of New Equipment," has been considerably simplified.

   l. Paragraph 3.K.3, "Oil Recovery Vessels," has been moved to volume II of this manual.

   m. Subparagraph 5.C.1.g, "Use Of Air Ports And Port Lights," has been moved to paragraph 6.I.4.

   n. Subparagraph 5.C.2.f, "Location Of Emergency Sources Of Power," has been added.

   o. Subparagraph 5.D.4.d has been rewritten to clarify oversight conducted by classification societies.

   p. Subparagraph 6.A.2.c, a listing of Commandant (G-MTH-5)-related NVIC's, has been updated.

   q. Figure 6-21 has been updated to include new nations signatory to the International Convention on Load Lines, 1966.

   r. Subparagraph 6.G.2.a has been rewritten to clarify "recognized classification societies" for structural standards.

3. ACTION.

   a. Remove and insert the following pages:

Remove	Insert
Cover Sheet	New Cover Sheet
	Form C9-5122
	Record Of Changes
CONTENTS I through CONTENTS II	CONTENTS I through CONTENTS II, CH-1
1-i	1-i, CH-1
1-1 through 1-8	1-1 through 1-7, CH--1
2-i through 2-ii	2-i through 2-ii, CH-1
2-1 through 2-8	2-1 through 2-7, CH-1
3-i through 3-vii	3-i through 3-vii, CH-1
3-1 through 3-4	3-1 through 3-4, CH-1
3-9 through 3-10	3-9 through 3-10, CH-1

3. a. (cont'd)

Remove	Insert
3-15 through 3-20	3-15 through 3-20, CH-1
3-27 through 3-36	3-27 through 3-36, CH-1
3-39 through 3-48	3-39 through 3-48, CH-1
3-53 through 3-74	3-53 through 3-74, CH-1
3-77 through 3-94	3-77 through 3-94, CH-1
3-99 through 3-112	3-99 through 3-112, CH-1
4-i through 4-ii	4-i through 4-ii, CH-1
4-1 through 4-6	4-1 through 4-6, CH-1
4-9 through 4-12	4-9 through 4-12, CH-1
4-27 through 4-30	4-27 through 4-30, CH-1
4-33 through 4-34	4-33 through 4-34, CH-1
5-i through 5-iii	5-i through 5-iii, CH-1
5-1 through 5-27	5-1 through 5-25, CH-1
6-i through 6-vi	6-i through 6-vi, CH-1
6-1 through 6-18	6-1 through 6-18, CH-1
6-21 through 6-24	6-21 through 6-24, CH-1
6-29 through 6-30	6-29 through 6-30, CH-1
6-33 through 6-38	6-33 through 6-38, CH-1
6-51 through 6-60	6-51 through 6-60, CH-1
6-65 through 6-70	6-65 through 6-70, CH-1
6-73 through 6-78	6-73 through 6-78, CH-1
6-81 through 6-95	6-81 through 6-95, CH-1
FIGURES I through FIGURES III	FIGURES I through FIGURES III, CH-1

b. Make the following pen-and-ink corrections to the Volume IV transmittal letter dated 22 OCT 1984:
   (1) Change "COMDTNOTE 16000" to "COMDTINST M16000.9."
   (2) Change "COMMANDANT NOTICE 16000" to "COMMANDANT INSTUCTION M16000.9."
   (3) Cross out "CANCELLED: 21 APR 1985."

c. Cross the appropriate entry on the Record of Changes page.

/s/ J. W. KIME
Chief, Office of Merchant Marine Safety

Encl: (1) CH-1 to Volume IV, COMDTINST M16000.9

Non-Standard Distribution:

B:c CCGD3, 9 (15); CCGD8 (14); CCGD7 (11); CCGD2 (10); CCGD13 (9); CCGD5 (7); CCGD1, 17 (6); CCGD11, 12 (5); CCGD14 (4).

C:e San Francisco (40); Baltimore (22); Hampton Roads (19); Mobile (18); Galveston, Long Beach, Portland OR (16); Boston, Miami, Honolulu (15); Puget Sound, Anchorage (13); Jacksonville (11); Cincinnati, San Diego (10); Savannah, Duluth (9); Paducah, St. Louis, Chicago, Port Arthur (8); Portland ME, Louisville, Pittsburgh, Cleveland (7); Nashville, Wilmington, San Juan, Tampa, Buffalo (6); Providence, Memphis, Corpus Christi, Detroit, Toledo (5); Huntington, Charleston, Milwaukee, Valdez (4); Juneau (3).

C:m New Orleans (140); New York (22); Philadelphia (10); Houston (6); St. Ignace (4); Sturgeon Bay (3).

D:d New Orleans (12); New York (6) (extra).

D:k New York (3); Jacksonville, New orleans, Houston, San Francisco (1) (extra).

D:l CG Liaison Officer MILSEALIFTCOMD M-65 STRAT HOB, CG Liaison Officer American Samoa, CG Liaison Officer JUSMAGPHIL (1).

E:o New York (15); New orleans (13); Philadelphia, Houston (6); Muskegon (4); New Haven (3); New London, Sault Ste. Marie (1).
Panama Canal Coast Guard Advisor (1).
NTSB (Marine Accident Division) (2).
DOJ Torts Branch (Washington, DC; New York; San Francisco only) (1).
ASS (2).
MSC (M-24) (1).
NOAA Fleet Inspector (1).

MAILING ADDRESS:
U.S. Coast Guard (G-MP-3)
Washington, D.C. 20593
Phone: 202-426-2298
CONDTNOTE 16000
22 OCT 1984

COMMANDANT NOTICE 16000

CANCELLED: 21 APR 1985

Subj: TRANSMITTAL OF VOLUME IV - TECHNICAL - MARINE SAFETY MANUAL, COMDTINST M16000.9

1. PURPOSE. This Notice releases the newly revised Volume IV of the Marine Safety Manual for the information, use, and guidance of Coast Guard personnel assigned to marine safety duties. It presents the authority, background, and rationale for the various activities performed by the Marine Technical and Hazardous Materials Division (G-MTH) and certain branches of the Merchant Vessel Inspection Division (G-MVI) at Headquarters, and three field (mmt) offices in New York, New Orleans, and San Francisco. Along with field marine safety units, these activities comprise the federal program for assuring that commercial vessels and their equipment are designed in accordance with federal safety and pollution abatement standards. This volume describes the essential functions which must be performed to attain the overall marine safety objectives of the Coast Guard.

2. DIRECTIVES AFFECTED. COMDTINST M16000.3 (old CG-495) dated 2 JUN 1981 is hereby cancelled.

3. DISCUSSION.

   a. A comprehensive manual which provides guidance on the application of Coast Guard regulations and explains the rationale behind their development is vital to the successful execution of the marine safety program. This volume is intended to serve that function by encompassing the scope of technical activities performed by Headquarters and field (mmt) offices. The interaction of these units with other marine safety units,

3. a. (cont'd) classification societies, and various domestic and international organizations and committees is explained, and established procedures are delineated. Providing oversight and technical direction for organizations that perform plan review and inspection functions on behalf of the Coast Guard is a new function which is discussed in detail in this volume.

   b. The provisions of this volume may not cover individual situations which are best handled through experience and sound judgment. Hence, the policies and guidance issued herein are intended as a guide for the consistent and uniform execution of the marine safety program, without undue restriction of independent judgment and action on the part of marine safety personnel.

   c. In conforming with the policies of the Coast Guard Directives System, the Marine Safety Manual will begin utilizing three-hole binders. Coast Guard subscribers may obtain these binders through the federal supply system. As three-ring binders are more readily available than four-ring binders, acquisition by the general public should present little difficulty.

   d. In addition to an expanded Table of Contents and a List of Figures, this volume will also be indexed. An index has not yet been completed, but will be distributed with the first change to this volume.

   e. All personnel are encouraged to use the self-mailer, Form CC-5122, to make suggestions for improving the volume. Previous editions of CG-5122 may be used until the revised form has been made available.

4. CHANGES. When necessary, the volume will be updated by consecutively numbered changes.

5. ACTION. District commanders and commanding officers shall ensure that personnel performing marine safety duties are familiar with the provisions of this volume. In cases of apparent conflict between this volume and provisions of statutes or regulations, the latter provisions shall be applied and Commandant (G-M) shall be advised of the apparent conflict. In cases where there is an apparent conflict between the volume and current marine practice, Commandant (G-MTH) should be contacted for further resolution of the matter. Appropriate action will be taken in such cases to correct conflicting provisions of this volume.

/s/ CLYDE T. LUSK, Jr.
Chief, Office of Merchant Marine Safety

Non-Standard Distribution:

B:c CCGD3, 8, 9, 12, 17 (15); CCGD2 (10); CCGD13 (9); CCGD7 (8); CCGD11 (7); CCGD5, 14 (5); CCGD1 (4); CCGD8(mmt) (25); CCGD3(mmt) (13); CCGD12(mmt) (7) (extra).

C:e San Francisco (40); Mobile (26): Baltimore (25); Hampton Roads, Miami, Portland OR (20); Boston, Charleston, Jacksonville, Tampa, San Diego, Anchorage (15); San Juan (11); Cincinnati, Memphis, Nashville, Paducah, Savannah, Buffalo, Duluth, Long Beach, Puget Sound, Valdez (10); Portland ME (9); St. Louis, Galveston, Juneau (8); Louisville, Detroit, Milwaukee (7); Pittsburgh, Chicago, Honolulu (6); Providence, Corpus Christi, Cleveland (5); Wilmington, Port Arthur, Toledo (4); Huntington (3).

C:m New Orleans (100); New York (70); Philadelphia (20); Houston (6); St. Ignace (4); Sturgeon Bay (3).

D:1 CG Liaison Officer MILSEALIFTCOMD H-65 STRAT MOB, CG Liaison Officer JUSMGPHIL (1).

E:o New Orleans (16); New York (15); Houston (6); Philadelphia (6); New Haven, Muskegon (4); Sault Ste. Marie (3); New London (1).
Panam Canal Coast Guard Advisor (1).
NTSB (Marine Accident Division) (2).
DOJ Torts Branch (Washington, D.C., New York, San Francisco only) (1).
ABS (2).
MSC (M-24) (1).
NOAA Fleet Inspector (1).
ZTC-118

DEPARTMENT OF TRANSPORTATION U.S. COAST GUARD CG-5122 (Rev. 10-84)	**SUGGESTION FOR IMPROVING THE MARINE SAFETY MANUAL, COMDTINST M16000 SERIES**

INSTRUCTIONS

Thoroughly describe your suggestion, giving careful consideration to whether it has local, Coast Guard-wide or broad marine safety applications. You may wish to discuss your suggestion with appropriate supervisors and other personnel before submitting this form.

FROM: *(Unit name and address)*	NATURE OF SUGGESTION ☐ ADDITION ☐ CORRECTION ☐ DELETION ☐ OTHER *(Specify)* _____

SUGGESTION: Explain your proposal in sufficient detail so reviewing officers will know exactly what you are proposing. Specify if your proposal has local, Coast Guard-wide or broad marine safety application. Cite the specific section(s) of the manual you are commenting on and specify the benefits of your suggestions. *(If more space is needed, continue on extra sheet(s)).*

SIGNATURE *(Title and Grade)*	DATE

PREVIOUS EDITION IS OBSOLETE

MARINE SAFETY MANUAL

VOLUME IV

TABLE OF CONTENTS

CHAPTER 1. THE COAST GUARD'S COMERCIAL VESSEL SAFETY TECHNICAL ORGANIZATION
Section 1.A Introduction
Section 1.B Headquarters Functions
Section 1.C Marine Safety Center (MSC)
Section 1.D Plans And Specifications

CHAPTER 2. TECHNICAL COMPUTER PROGRAM SUPPORT (MSC) 202-366-6480
Section 2.A Introduction
Section 2.B Background
Section 2.C Vessel Hull-Form Characteristics/Stability
Section 2.D Structural Programs
Section 2.E Pressure Vessel Analyses
Section 2.F Developmental Programs
Section 2.G Database Programs

CHAPTER 3. ENGINEERING SYSTEMS (G-MSE-3) 202-267-2206
Section 3.A Introduction
Section 3.B Plan Review
Section 3.C Equipment
Section 3.D Vessel Inspection Alternatives
Section 3.E Mechanical Systems
Section 3.F Vital System Automation
Section 3.G Electrical Systems
Section 3.H Novel Vessel Designs

CHAPTER 4. CONSIDERATIONS FOR SURVIVAL SYSTEMS (G-MSE-4) 202-267-1444
Section 4.A Introduction
Section 4.B Functions Of The Survival Systems Branch
Section 4.C Areas Of Branch Interest
Section 4.D Sources Of Information
Section 4.E Specific Branch Activities
Section 4.F Review Of Lifesaving Equipment Installations And Designs
Section 4.G Pollution Abatement Measures
Section 4.H Fire Protection Systems
Section 4.I Approval Of Equipment And Systems

CHAPTER 5. TECHNICAL CONSIDERATIONS FOR VESSEL DESIGN (G-MSE) 202-267-2967
Section 5.A Ship Design And Marine Safety
Section 5.B Fire Protection And Vessel Design
Section 5.C Hull Arrangements And Fittings
Section 5.D Oversight Of Third-Party Inspections
Section 5.E Controllability In Vessel Design

MARINE SAFETY MANUAL

VOLUME IV

TABLE OF CONTENTS

CHAPTER 6. SHIP STABILITY, SUBDIVISION, STRUCTURES, WELDING, LOAD LINES, AND MANEUVERABILITY (G-MSE-2) 202-267-2988
Section 6.A General
Section 6.B Stability-Related Drawings And Calculations (46 CFR 170-174)
Section 6.C Stability Letters And Trim And Stability Booklets (46 CFR 170, Subpart D)
Section 6.D Stability Tests (46 CFR 170, Subpart F)
Section 6.E Special Rules Pertaining To Specific Vessel Types
Section 6.F Load Lines
Section 6.G Hull Strength And Loading In Vessel Design
Section 6.H General Methods Of Fabrication
Section 6.I Hull Fittings And Closures
Section 6.J Maneuverability In Vessel Design

CHAPTER 7. THE TONNAGE MEASUREMENT PROGRAM (MSC-3) 202-366-6502
Section 7.A Introduction
Section 7.B Authority
Section 7.C Basic Admeasurement Policy
Section 7.D The History Of Admeasurement
Section 7.E Tonnage Measurement Systems
Section 7.F The Standard U.S. System Of Measurement
Section 7.G The Optional Dual-Tonnage Method Of Measurement
Section 7.H The International Convention On Tonnage Measurement Of Ships, 1969
Section 7.I The Optional Simplified Measurement Method For Small Vessels
Section 7.J Measurement For Transit Of The Panama Canal
Section 7.K Measurement For Transit Of The Suez Canal

MARINE SAFETY MANUAL
VOLUME IV
TABLE OF CONTENTS

CHAPTER 1. THE COAST GUARD'S COMERCIAL VESSEL SAFETY TECHNICAL ORGANIZATION
Section 1.A Introduction
Section 1.B Headquarters Functions
Section 1.C Marine Safety Center (MSC)
Section 1.D Plans And Specifications

CHAPTER 2. TECHNICAL COMPUTER PROGRAM SUPPORT (G-MSC) 267-6480
Section 2.A Introduction
Section 2.B Background
Section 2.C Vessel Hull-Form Characteristics/Stability
Section 2.D Structural Programs
Section 2.E Pressure Vessel Analyses
Section 2.F Developmental Programs
Section 2.G Database Programs

CHAPTER 3. ENGINEERING SYSTEMS (G-MTH-2) 267-2206
Section 3.A Engineering Scope And Program Interfaces
Section 3.B Overview Of Electrical Systems
Section 3.C Plan Review Of Electrical Systems
Section 3.D Regulations And References
Section 3.E Acceptable Equipment
Section 3.F Equipment Lists, COMDTINST M16714.3 (Old CG-190)
Section 3.G Piping Systems
Section 3.H Specific Piping Systems
Section 3.I Boilers, Pressure Vessels, And Similar Equipment
Section 3.J Engineering Materials
Section 3.K Special Engineering Applications For Pollution Prevention
Section 3.L Automation (See 46 CFR 62)
Section 3.M Special Equipment Approvals
Section 3.N Novel Vessel Designs
Section 3.O Steering Gear
Section 3.P Deepwater Ports (DWP's)
Section 3.Q Nuclear Systems

CHAPTER 4. CONSIDERATIONS FOR SURVIVAL SYSTEMS (G-MVI-3) 267-1444
Section 4.A Introduction
Section 4.B Functions Of The Survival Systems Branch
Section 4.C Areas Of Branch Interest
Section 4.D Sources Of Information
Section 4.E Specific Branch Activities
Section 4.F Review Of Lifesaving Equipment Installations And Designs
Section 4.G Pollution Abatement Measures
Section 4.H Fire Protection Systems
Section 4.I Approval Of Equipment And Systems

MARINE SAFETY MANUAL
VOLUME IV
TABLE OF CONTENTS

CHAPTER 5. TECHNICAL CONSIDERATIONS FOR VESSEL DESIGN (G-MTH-4) 267-2997
Section 5.A Ship Design And Marine Safety
Section 5.B Fire Protection And Vessel Design
Section 5.C Hull Arrangements And Fittings
Section 5.D Oversight Of Third-Party Inspections
Section 5.E Controlability In Vessel Design

CHAPTER 6. SHIP STABILITY, SUBDIVISION, STRUCTURES, WELDING, LOAD LINES, AND MANEUVERABILITY (G-MTH-3) 267-2988
Section 6.A General
Section 6.B Stability-Related Drawings And Calculations (46 CFR 170-174)
Section 6.C Stability Letters And Trim And Stability Booklets (46 CFR 170, Subpart D)
Section 6.D Stability Tests (46 CFR 170, Subpart F)
Section 6.E Special Rules Pertaining To Specific Vessel Types
Section 6.F Load Lines
Section 6.G Hull Strength And Loading In Vessel Design
Section 6.H General Methods Of Fabrication
Section 6.I Hull Fittings And Closures
Section 6.J Maneuverability In Vessel Design

CHAPTER 7. THE TONNAGE MEASUREMENT PROGRAM (G-MVI-5) 267-2992
Section 7.A Introduction
Section 7.B Authority
Section 7.C Basic Admeasurement Policy
Section 7.D The History Of Admeasurement
Section 7.E Tonnage Measurement Systems
Section 7.F The Standard U.S. System Of Measurement
Section 7.G The Optional Dual-Tonnage Method Of Measurement
Section 7.H The International Convention On Tonnage Measurement Of Ships, 1969
Section 7.I The Optional Simplified Measurement Method For Small Vessels
Section 7.J Measurement For Transit Of The Panama Canal
Section 7.K Measurement For Transit Of The Suez Canal

CHAPTER 8. CHEMICAL ENGINEERING (TO BE DEVELOPED) (G-MTH-1) 267-1217

CHAPTER 9. CARGOES OF HAZARDOUS MATERIALS (TO BE DEVELOPED) (G-MTH-1) 267-1217

LIST OF FIGURES

MARINE SAFETY MANUAL

CHAPTER 1. THE COAST GUARD'S COMERCIAL VESSEL SAFETY TECHNICAL ORGANIZATION

CONTENTS

SECTION		PAGE
1.A.	Introduction	1-1
1.B.	Headquarters Functions	1-1
1.B.1.	Division Responsibilities	1-1
1.B.2.	Synopsis Of Headquarters Technical Functions	1-1
1.C.	Marine Safety Center (MSC)	1-3
1.D.	Plans And Specifications	1-4
1.D.1.	Introduction	1-4
1.D.2.	Authority	1-4
1.D.3.	Submittal Procedures	1-4
1.D.3.a.	General	1-4
1.D.3.b.	Reviewing Office	1-4
1.D.3.c.	Submittal Of Plans	1-4
1.D.3.d.	Vessels Classed By ABS	1-6
1.D.3.e.	New Construction	1-6
1.D.3.f.	Novel Or Unconventional Vessel Designs	1-6
1.D.3.g.	Repairs And Conversion	1-6
1.D.3.h.	Cargo Gear Drawings	1-6
1.D.3.i.	Identification Of Plans And Specifications	1-7
1.D.3.j.	Identical Inland Tank Barges Under 300 Feet	1-7
1.D.3.k.	Vessels Built To The Same Design	1-7

CHAPTER 1. THE COAST GUARD'S COMMERCIAL VESSEL SAFETY TECHNICAL ORGANIZATION

A. Introduction. The Coast Guard's Commercial Vessel Safety (CVS) technical program consists of Headquarters staff elements in the Marine Technical and Hazardous Materials Division, Commandant (G-MTH), the Merchant Vessel Inspection Division, Commandant (G-MVI), and the Marine Safety Center (MSC). A 1982 Headquarters reorganization incorporated the (G-MMT) and (G-MHM) technical branches in a renamed division (G-MTH) and the existing Merchant Vessel Inspection Division.

B. Headquarters Functions.

1. Division Responsibilities. Commandant (G-MTH) and (G-MVI) are staff elements of the Office of Marine Safety, Security and Environmental Protection, Commandant (G-M). These divisions are divided into branches, each tasked with distinct duties and responsibilities. Commandant (G-MVI) now contains the former G-MMT branches concerned with survival systems (G-MVI-3) and tonnage survey (G-MVI-5). CVS technical billets are currently located in the following branches:

   a. Hazardous Materials (G-MTH-1);

   b. Engineering (G-MTH-2);

   c. Ship Design (G-MTH-4);

   d. Naval Architecture (G-MTH-3);

   e. Survival Systems (G-MVI-3); and

   f. Tonnage Survey (G-MVI-5).

2. Synopsis Of Headquarters Technical Functions. Commandant (G-MTH) and (G-MVI) administer the federal program for assuring that commercial vessels and their equipment are designed in accordance with federal safety and pollution abatement standards. This includes the functions listed below:

   a. Review plans and specifications for the construction or alteration of technically unusual or novel merchant vessels.

   b. Examine safety equipment and devices submitted to the Commandant; make technical recommendations to manufacturers in cases when the approval of the Commandant is required; determine whether certain equipment and devices, not requiring formal approval, are suitable for marine use; and promote the development of promising safety equipment concepts.

   c. Provide oversight and technical direction for organizations that perform plan review and inspection functions on behalf of the Coast Guard.

1.B.2. d. Develop new or revised regulations concerning:
(1) Vessel structure, arrangement and stability;
(2) Marine, electrical, and fire protection engineering;
(3) Safety equipment; hazardous materials; and
(4) Pollution prevention equipment designed to control vessel discharge of oil, hazardous chemicals, or human waste.

e. Act on technical questions referred to the Commandant in connection with: design and inspection of new construction, repairs, mill and factory production, or vessels in service; vessel examination discrepancies or incidents involving chemical, liquefied gas, or incinerator vessels.

f. Provide technical direction and guidance to marine inspectors and the HSC; evaluate workload at the MSC by reviewing day files and semi-annual workload statistics.

g. Establish policy concerning load line assignment and administration; oversee load line assignment by classification societies; reply to inquiries on load line matters.

h. Conduct special studies relating to the safety of merchant vessels and the adequacy of their equipment.

i. Analyze reports of marine casualties referred by the Marine Investigation Division, Commandant (G-MMI); make recommendations for action.

j. Act on applications for waivers or equivalencies of the navigation and vessel inspection laws; analyze determinations of equivalency that have been granted in the field; and make recommendations on technical requirements in cases when equivalent levels of safety have been established.

k. Develop national position papers on technical matters affecting maritime safety; represent the U.S. in the International Maritime Organization (IMO) of the United Nations.

l. Develop and maintain codes and standards in the area of marine safety responsibilities through active involvement in professional societies. This participation is usually limited to those societies or organizations whose standards have been adopted into U.S. regulations.

m. Manage the vessel admeasurement program by administering and providing guidance on tonnage measurement statutes and regulations of the U.S., the Panama Canal, and the Suez Canal that are applicable to U.S. vessels.

1.B.2. n. Provide technical support to the Office of Hazardous Materials Regulation, Research and Special Programs Administration, Department of Transportation (DOT), regarding the carriage of hazardous materials in packaged shipments; administer the coast Guard's approval program for certain hazardous materials packaged under 49 CFR 176.

o. Direct the Coast Guard's programs on bulk hazardous solids, fumigation, special permits, and ships' stores certificates; evaluate new liquid cargoes for bulk shipment by vessels and specify minimum carriage requirements and cargo compatibility information.

p. Manage the Coast Guard's Letter of Compliance (LOC) program for foreign-flag liquefied gas and chemical tankers and barges.

q. Provide technical support for the development and implementation of the Coast Guard's marine safety occupational health and safety programs, which cover both Coast Guard and commercial maritime personnel.

r. Provide technical support to the Office of Marine Environment and Systems (G-W) in areas such as Ports and Waterways Safety Act (PWSA), International Convention for the Prevention of Pollution from Ships (MARPOL), Cargoes of Particular Hazard (COPH), and captain of the port (COTP) boardings involving hazardous materials.

s. Provide technical support to the Office of Boating, Public, and Consumer Affairs (G-B) for the development and administration of boating safety standards.

t. Evaluate plans and specifications for the construction or alteration of deepwater ports.

u. Provide vessel stability and strength data, upon request, to on-scene coordinators to mitigate environmental harm resulting from marine casualties.

v. Identify the need for, initiate, and either monitor or conduct research and development projects or special studies relating to the safety of commercial vessels and hazardous materials.

C. Marine Safety Center (MSC). The MSC is an independent Headquarters unit in Washington, D.C., under the technical control of the Chief, Office of Merchant Marine Safety, Commandant (G-M). The MSC was established (summer 1986) to consolidate the field technical offices and centralize the plan review support functions. The MSC organization includes: a hull division with two branches, major vessels and mobile offshore drilling units (MODU's); an engineering division with two branches, machinery and electrical; and a cargo division. The hull division reviews structural and stability-related drawings and conducts or coordinates the witnessing of stability tests. The engineering division reviews all engineering systems drawings. The cargo division reviews or coordinates review of all vessels engaged in the carriage of hazardous

1.C. (cont'd) materials in bulk. The MSC receives direct technical guidance and support from Commandant (G-MTH) in the form of:

1. Direct verbal and written communications with Headquarters;

2. Commandant (G-MTH) Division Orders;

3. Commandant (G-MTH) Policy Files and Policy File Memorandums;

4. Review of correspondence day files;

5. Evaluation of workload;

6. Development and coordination of supportive computer software;

7. Routine visits; and

8. Various publications, including Coast Guard regulations (Title 46, CFR), the Marine Safety Manual (MSM), and Commandant Instructions and Notices.

D. Plans And Specifications.

1. Introduction. The information in this part is intended to provide guidance and promote uniformity in the submission and review of plans for the construction, alteration, and repair of inspected vessels, load lined vessels, deepwater ports, and certain safety systems aboard uninspected vessels.

2. Authority. 46 U.S.C. 3306 authorizes the commandant to approve plans and specifications for construction or alteration of most U.S. vessels (see 46 U.S.C. 2109 and 3302 for exemptions). 46 U.S.C. 3316 authorizes the use of the American Bureau of Shipping (ABS) for plan review. Under 46 U.S.C. 3309, the Certificate of Inspection (COI) of a vessel shall be withdrawn if the vessel does not conform in all material respects to the approved plans and specifications. Figure 1-1 lists the sections of Titles 33 and 46, CFR that require the submittal of plans and specifications according to vessel types. Unless otherwise indicated, requirements are for U.S. vessels.

3. Submittal Procedures.

a. General. The general requirements for plans, drawings, and blueprints are established in 46 CFR 2.90-1. The various regulations in Title 46, CFR, Chapter I (Shipping) and Title 33, CFR, Subchapter O (Pollution) describe procedures for submitting plans and specifications for Coast Guard review.

b. Reviewing Office. The MSC provides technical support services to the field inspection offices nationwide.

c. Submittal Of Plans. Plan review will begin when the Coast Guard receives a signed Application for Inspection (Form CG-3752), which

MARINE SAFETY MANUAL
FIGURE 1-1

REGULATIONS LISTING REQUIRED PLANS AND SPECIFICATIONS

Vessel Type	New	Altered	Stability Plans
TANKER	46 CFR 31.10-5	46 CFR 31.01-20, 31.10-25	46 GFR 170
OIL (U.S. & FOR.)	33 CFR 157.24, 157.102-110, 157.200-202	33 CFR 157.158	---
CHEMICAL (U.S.)	46 CFR 153.8	---	---
CHEMICAL (FOR.)	46 CFR 153.9	---	---
GAS (U.S.)	46 CFR 154.4	---	---
GAS (FOR.)	46 CFR 154.5	---	---
PASSENGER	46 CFR 71.65	46 CFR 71.55, 71.65-10	46 CFR 170.180, 170.185, 170.190
CARGO/MISC.	46 CFR 91.55-5	46 CFR 91.45-1, 91.55-10	46 CFR 170.180, 170.185
MODU	46 CFR 107.305	---	46 CFR 170.075, 170.090
SMALL PASSENGER	46 CFR 177.05	46 CTR 176.20-1	46 CFR 171.020, 171.045
OCEANOGRAPHIC RESEARCH	46 CFR 189.55	46 CFR 189.45-1	46 CFR 170.180
ALL			
MARINE ENG.	46 CFR 50.20	---	---
ELECTRICAL ENG.	46 CFR 110.25	---	---

1.D.3. c. (cont'd) implies that a work contract exists. Current Coast Guard resources dictate that concept review (except for unusual designs) is not to be performed; no longer can free engineering design service be provided. Generally, plans that require Coast Guard approval should be submitted directly to the MSC. However, plans for boilers and items requiring approval under 46 CFR Subchapter Q, should be submitted directly to Commandant (G-MTH) or (G-MVI), respectively.

d. Vessels Classed By ABS. Navigation and Vessel Inspection Circular (NVIC) 10-82, CH-1, outlines plan review and inspection procedures for U.S. vessels under construction that will be certificated by the Coast Guard (CG) and classed by the American Bureau of Shipping (ABS). This circular implements the provisions of the CG-ABS agreement signed on 27 April 1982. Plan submittal and review procedures are discussed in detail in Section III of Enclosure (2) to NVIC 10-82.

e. New Construction. NVIC 8-84 provides detailed procedures for the submittal of new construction drawings for approval. This circular is intended to streamline the plan review process by advising submitters of the information required to review a design by the applicable regulations. Compliance with NVIC 8-84 helps to minimize the number of drawings returned for revision or disapproved, thus reducing unnecessary and expensive delays.

f. Novel Or Unconventional Vessel Designs. Plans and drawings of vessels and/or marine systems and equipment that are considered to be of novel or unconventional design should be forwarded to Commandant (G-MTH) for review. Although the OCMI will normally perform plan review of most Subchapter T vessels to be constructed in his or her inspection zone, Commandant (G-MTH) shall review the plans of all vessels of novel design.

g. Repairs And Conversion. Proposals are frequently received by the MSC prior to selection of a repair site. Prospective plan and correspondence files will be established and forwarded to the OCMI when the MSC is apprised of the worksite. OCMI's are encouraged to communicate with the MSC or Commandant (G-MTH), as appropriate, when inspection requests are received for major repairs or conversions for which approved plans and files of related correspondence are not held. NVIC 10-81 provides further guidance in this area.

h. Cargo Gear Drawings. Plans for cargo gear that have been reviewed and approved by ABS or the International Cargo Bureau, Inc., need not be reviewed by the Coast Guard. However, OCMI's shall verify that the plans have been reviewed to the proper regulatory standard (e.g., American Petroleum Institute (API) 2C for cranes on MODU's). [NOTE: For MODU's, 46 CFR 107.309(b) requires that machinery and electrical drawings be submitted to the MSC for review.]

1.D.3. i. Identification Of Plans And Specifications. Whenever plans and specifications of inspected vessels are submitted to the Coast Guard, they shall be identified by vessel name and Official Number (O.N.), when known. In the case of a new vessel, designation may be made by shipyard work order number or hull number until a name or an O.N. is assigned; then the name and O.N. shall be indicated. In the event of conversion of an existing vessel, the new name shall be given (if known) along with the former name or type designation. Tank vessel plans shall be accompanied by data concerning the grades of liquid cargoes the vessel will carry (a list of desired cargoes, in the case of chemical and gas carriers) and its proposed service. Tank barges shall also be identified as manned or unmanned.

j. Identical Inland Tank Barges Under 300 Feet. A new tank barge for inland service (regulated under 46 CFR, Subchapter D) may be identical in structure and piping to a previously approved barge. To avoid redundancy, the following procedures shall be observed if the barge is under 300 feet in length:

(1) For new inland tank barges carry ing petroleum products, only the general design, hull structure, electrical, and piping plans need be submitted to the NSC.

(2) When a barge is identical in design to a previously approved one, extension of the existing approval to the proposed barge can be given by letter from the OCMI, provided the shipyard is the same, the vessel plans are the same, and the applicable regulations have not changed since the original approval was given. The MSC should be apprised of the new barge's hull and contract numbers for record keeping purposes.

(3) Construction details that do not involve the structural integrity of the vessel may be approved by the OCMI.

(4) When previously approved construction is changed by a significant alteration, the plans specified in subparagraph 1.D.3.j.(1) above must be resubmitted to the MSC for review.

k. Vessels Built To The Same Design. The review of vessels other than those identified in paragraph 1.D.3.j above involves piping, machinery, stability, and load line requirements. Vessels other than inland tank barges that are under 300 feet in length may also be subject to longitudinal strength requirements. Consequently, any request for plan approval extension shall be directed to the NSC. For a T(S) vessel reviewed solely by an OCMI under 46 CFR, Subchapter T, the request shall be directed to the OCMI.

MARINE SAFETY MANUAL

CHAPTER 2. TECHNICAL COMPUTER PROGRAM SUPPORT

CONTENTS

SECTION		PAGE
2.A.	Introduction	2-1
2.B.	Background	2-1
2.C.	Vessel Hull-Form Characteristics/Stability	2-2
2.C.1.	Ship Hull Characteristics Program (SHCP)	2-2
2.C.1.a.	Hydrostatics	2-2
2.C.1.b.	Trim Lines	2-2
2.C.1.c.	Longitudinal Strength	2-2
2.C.1 d.	Floodable Length	2-2
2.C.1 e.	Limiting Drafts	2-2
2.C.1 f.	Intact Stability	2-2
2.C.1 g.	Damaged Stability Cross Curves	2-2
2.C.1 h.	Damaged Statical Stability	2-2
2.C.1 i.	Intact Statical Stability On Waves	2-2
2.C.2	Stability Analysis Of Arbitrary Forms (STAAF86)	2-3
2.C.2.a.	Hydrostatics	2-3
2.C.2.b.	Intact Stability	2-3
2.C.2.c.	Damaged Stability	2-3
2.C.2.d.	Bonjean's Calculations	2-3
2.C.2.e.	Tank Capacity Calibration	2-3
2.C.2.f.	Longitudinal Strength	2-3
2.C.2.g.	Limiting Drafts	2-3
2.C.3.	Offsets/Lines Digitizing (OFFSETS)	2-3
2.C.4.	Offsets/Lines File Generator (HANDOFF)	2-4
2.C.5.	Offsets/Lines File Editor (STRETCH)	2-4
2.C.6.	SHCP/Case File Data Generator (PREPRO)	2-4
2.C.7.	STAAF/Case File Data Generator (PRESTAFF)	2-4
2.C.8.	Weather Profile Area Digitizing Program (GMDIGIT)	2-5
2.C.9.	Weather Criteria Program (WEATHER)	2-5
2.C.10.	Energy Criteria Analysis Program (STABCRIT)	2-5
2.C.11.	Residual Energy Analysis Program (DAMCRIT)	2-5
2.C.12.	Subdivision Criteria Program (DRAFTCRIT)	2-6
2.C.13.	Sailing Vessel Stability Program (SAILCRIT)	2-6
2.C.14.	Stability Test Waterline Fit Program (WATERLINE)	2-6
2.C.15.	Interactive Wireframe Graphics Program (PICTURE)	2-6
2.C.16.	SHCP Output Plotting Program (PLOT)	2-6
2.C.17.	Stability Analysis Graphic Display (SAGD)	2-7
2.D.	Structural Programs	2-7
2.D.1.	CGSCORES	2-7
2.D.1.a.	STATIC	2-7
2.D.1.b.	SCOMOT	2-7

CONTENTS

SECTION		PAGE
2.D.2.	Graphics-Oriented Interactive Finite Element Timesharing System (GIFTS)	2-7
2.D.3.	FLEXISM	2-8
2.D.4.	MAESTRO	2-8
2.D.5.	Structural Analysis Code Kit (SACK)	2-10
2.D.6.	Independent Tank Barge Analysis Program (BARGE)	2-10
2.E.	Pressure Vessel Analyses	2-10
2.E.1.	ZICK-1	2-10
2.E.2.	MULTISADL	2-11
2.F.	Developmental Programs	2-11
2.F.1.	Plan Review System	2-11
2.G.	Database Programs	2-12
2.G.1.	AIMS	2-12
2.G.2.	dBASE III PLUS	2-12

CHAPTER 2. TECHNICAL COMPUTER PROGRAM SUPPORT

A. Introduction. This chapter provides a general description of the computer services available to the Marine Safety Center. The majority of the programs are used during the course of plan review for stability assessment. They are also used in casualty investigations and regulatory project development by the Connandant (G-MTH). The computer type, language and graphics software requirements for each program are indicated in parentheses after each description. Documentation is available in the Marine Safety Center.

B. Background.

1. Prior to 1971, the Coast Guard had limited access to computer technology. The first programmable calculators were obtained in the mid-1960's; in the early 1970's, the Ship Review System was installed in Coast Guard Headquarters. This system permitted the automated digitizing of ship lines, and provided a means for direct transmission of the data thus obtained to a central computer for processing. This system, though functional, ultimately became unmanageable as it relied upon the equipment maintained by the district comptroller. In the mid-1970's, the Coast Guard procured Wang 2200 systems that had computational capabilities and the ability to telecommunicate with the DOT CDC computer system. This advance coincided with the implementation of damage stability requirements in the pollution prevention regulations (33 CFR 157). As it became evident that the Department's CDC system could not provide the timely response required for technical job submittals, commercial timesharing services were obtained in 1975. The District (mmt) offices accessed the commercial timesharing computer via modem using the Wang 2200 systems for preprocessing and post processing.

2. In 1986 the Marine Safety Center was formed through the consolidation of the District (mmt) offices. Shortly thereafter, the timesharing service, Wang 2200 systems and Ship Review System were replaced by a MicroVax II multiuser computer system in the Marine Safety Center. Most of the software and data files from the Ship Review System were converted and transfered to the MicroVax system which uses the Fortran language and the Vax/VHS operating system. Several other programs have been converted or procured for a PC which uses the BASIC language and the MSDOS operating system.

3. Most of the programs used in the Marine Safety Center for plan review and stability analysis provide graphic output and several allow digitized input. The Plot 10 (Tektronix) graphics routines and HCBS (Calcomp) plotting routines are linked with the main programs to generate the graphics and plots. Each computer program description has an acronym after its name. The additional words contained in parentheses under each of the descriptions of the computer programs indicate the computer system, the language the program is written in and if the results can be displayed/calls on the plot program. For example, VAX/FORTRAN/PLOT 10)

2.B.3. (cont'd) means the program runs on the Vax, is written in Fortran, and graphics is accomplished using Plot 10.

C. Vessel Hull-Form Characteristics/Stability.

1. Ship Hull Characteristics Procram (SHCP). SHCP calculates hydrostatics, longitudinal strength, intact and damaged stability characteristics, and other hull-form characteristics for "traditional" (monohull) vessels. SHCP has limited capabilities in assessing hull-form characteristics for multi-hull or unusually-shaped vessels. These vessels are examined using the program "STAAF86," paragraph C.2. Its job options are as follows:

   a. Hydrostatics. Calculates standard hydrostatic properties (volume and waterplane properties and coefficients) at selected waterlines with variable trim.

   b. Trim Lines. Calculates final damaged ship conditions and permeabilities after shell-to-shell flooding of specified compartments.

   c. Longitudinal Strength. Calculates shear and bending moment values for still water, in hogging and sagging conditions, assuming a trochoidal wave form and a specified weight distribution curve.

   d. Floodable Length. Determines the length of a shell-to-shell compartment with specified permeabilities that, when flooded, will cause the vessel to settle with its waterline tangent to the margin line.

   e. Limiting Drafts. Determines the maximum fore-and-aft drafts to which the vessel may be loaded prior to flooding and survive (i.e., not submerge the margin line) when a specified set of shell-to-shell compartments is flooded.

   f. Intact Stability. Calculates intact statical stability curves (righting arm) or cross curves of statical stability for up to 10 angles of heel.

   g. Damaged Stability Cross Curves. Calculates cross curves of stability for a specified set of damaged compartments.

   h. Damaged Statical Stability. Calculates righting arm values for specified sets of damaged conditions for up to 10 angles of heel.

   i. Intact Statical Stability On Waves. Calculates intact righting arm values for the vessel poised on a wave, for up to 10 angles of heel. The user may specify wave parameters of length, height, and relative position on the wave.

2.C.1. (cont'd) SHCP uses two data files to calculate hull-form related characteristics: a Ship Offset File and a Case Data File containing the Job-related information described above. SHCP uses numerical integration by Simpson's First Rule for calculating the vessel's volume. Therefore, non-parabolic hull forms must be described by the use of positive and negative appendages.
(VAX/FORTRAN)

2. Stability Analysis Of Arbitrary Forms (STAAF86). STAAF86 performs a function similar to SHCP for multi-hull vessels and those having unusual form. STAAF86 calculates hull-form properties such as hydrostatics and intact/damaged stability for catamarans, jack-up drilling platforms, and semi-submersibles that cannot be adequately assessed through SHCP. Its job options are as follows:

a. Hydrostatics. Calculates standard hydrostatic values (volume and waterplane area properties and coefficients) at selected waterlines, with option to vary trim.

b. Intact Stability. Calculates righting arm values for selected angles of heel (to a maximum of nine) and design conditions. Optional heeling axis allows examination of hull-forms for axis of minimum righting arm.

c. Damaged Stability. Calculates righting arm values based on selected ansies of heel and described compartment damage. Variable heeling axis analysis is also available for reviewing purposes.

d. Bonjean's Calculations. Calculates sectional areas at selected drafts (for input station only).

e. Tank Capacity Calibration. Calculates tank capacities at defined sounding levels.

f. Longitudinal Strength. Calculates bending moment and shear along the length of a vessel, based on specified weight distribution curves, under still-water, hogging, and sagging conditions.

g. Limiting Drafts. Determines the maximum fore-and-aft longitudinal center of gravity to which the vessel may be loaded prior to flooding and survive (i.e., not submerge the margin line) when a specified set of shell-to-shell compartments is flooded.

The STAAF86 program also uses a Ship Offset and Case Data file. STAAF86 has no capability for appendages.
(VAX/FORTRAN)

3. Offsets/Lines Digitizing Program (OFFSETS). OFFSETS is used to create a Ship Offset File. During a typical review of a vessel's hull-form

2.C.3. (cont'd) characteristics, the vessel's lines plan is received by the MSC and reviewed to ensure that all necessary information is included. A Ship Offset File, with a unique identification number, is created for each set of digitized lines and maintained by the MSC. OFFSETS is a program for interactively defining, editing, displaying, plotting, and storing ship hull offsets. OFFSETS output can be used to develop input for the U.S. Navy Ship Hull Characteristic Program (SHCP), U.S. Navy HULLDEFinition program (HULDEF), Coast Guard StabiliTy Analysis of Arbitrary Forms (STAAF).

(VAX/FORTRAN/PLOT10)

4. Offsets/Lines File Generator (HANDOFF). HANDOFF is a program for interactively defining and storing ship hull offsets entered from a keyboard using a table of offsets. HANDOFF output can be used to develop input for the U.S. Navy Ship Hull Characteristic Program (SHCP), and the Coast Guard Stability Analysis of Arbitrary Forms (STAAF).

(VAX/FORTRAN)

5. Offsets/Lines File Editor (STRETCH). STRETCH is a program for modifying existing offset files. The following options are available:

   a. Add a constant value to the Z coordinate;

   b. Rescale the X coordinate;

   c. Rescale the Y coordinate;

   d. Rescale the Z coordinate;

   e. Rescale all the coordinates;

   f. Add cylinders to STAAF86 offset file;

   g. Invert offsets file; and

   h. Convert BHS offsets to SHCP format.

6. SHCP/Case File Data Generator (PREPRO). This program emulates the SHCP User's Manual by automating the data entry procedure, querying the user for the case data requirements, and automatically compiling a file in the correct format for SHCP use.

(VAX/FORTRAN)

7. STAAF/Case File Data Generator (PRESTAFF). This program emulates the STAAF User's Manual, querying the user for the case data requirements and automatically compiling a file in the proper format for STAAF use.

(VAX/FORTRAN)

2.C.8. Weather Profile Area Digitizing Program (GMDIGIT). GMDIGIT is used to create a vessel's weather profile data file. During a typical review of a vessel's stability, the reviewer must check the weather criteria, 46 CFR 170.170. This requires digitizing of the vessel's profile and entry of characteristics, such as draft and displacement. GMDIGIT output consists of a table of profile areas and centroids for use by WEATHER which calculates the minimum required GM.

(VAX/FORTRAN/PLOT10)

9. Weather Criteria Program (WEATHER). This program computes the minimum required GH to meet static weather criteria of 46 CFR 170.170. Criteria analysis is available for service on exposed, partially protected, and protected waters at multiple drafts. WEATHER uses output from GHDIGIT.

(VAX/FORTRAN)

10. Energy Criteria Analysis Program (STABCRIT). This program computes the maximum value for the height of the center of gravity above the baseline (KG) at a siren draft to arrive at the minimum area under a righting arm curve to meet the energy stability criteria in 46 CFR 170.173 or the Rahola energy criteria which is applicable to certain hull-forms and barges. Host of the input for STABCRIT is taken directly from the output of SHCP or STAAF86 intact stability job options. Graphical output consists of a righting arm curve for both the input and optimized KG.

(VAX/FORTRAN/PLOT10)

11. Residual Energy Analysis Program (DAMCRIT). This program is used to calculate passenger vessel stability after damage according to the residual energy criteria recommended by IMO. These criteria are:

a. A range of positive stability of at least 15 degrees;

b. A maximum positive righting arm of at least .33 feet (.1m) within 15 degrees of the angle of equilibrium; and

c. At least 2.82 foot-degrees (.015 m-rad) of positive righting energy within 15 degrees of the angle of equilibrium (up to the angle of downflooding if it occurs at a lesser angle).

DAMCRIT also includes the IMO criteria provisions to ensure limited survivability for passenger crowding to one side, launching of fully loaded davit launched survival craft and beam winds.

True downflood angle after damage is also calculated in the program. The angle of downflooding is the angle at which water can enter the hull through hatches, ports, vents, etc. It is determined by accounting for trim as the vessel is heeled.

2.C.11. (cont'd) Most of the input for DAMCRIT is taken directly from the output of SHCP or STAAF86 damage stability job options. Graphical output consists of a righting arm curve for the input KG.
(VAX/FORTRAN/PLOT10)

12. Subdivision Criteria Program (DRAFTCRIT). This program is used to evaluate passenger vessels for compliance with the subdivision criteria of 46 CFR 171.070. DRAFTCRIT calculates the allowable (+) and (-) LCG for a given displacement by interpolating the output from the SHCP or STAAF86 Job option, limiting-draft, for each subdivision in the vessel. A plot of displacement vs. LCG for the two allowable LCG compartments is generated. The allowable trims and limiting drafts for a given displacement are calculated using moment to trim one inch (MT1) for that displacement. Maximum allowable intact KG required to satisfy the 2 inch minimum after damage GM is also calculated for the limiting draft and trim by interpolating KM's which are calculated by SHCP of STAAF86.
(VAX/FORTRAN/PLOT10)

13. Sailing Vessel Stability Program (SAILCRIT). This program is used to evaluate sailing passenger vessels and sailing school vessels for compliance with 46 CFR 171.055. The projected lateral area and centroid distance for SAILCRIT is available in the output of WEATHER. Multiple drafts may he evaluated. Most of the input for SAILCRIT is taken directly from the output of SHCP or STAAF86 intact stability job options. Graphical output consists of a righting arm curve for the input KG with superimposed HZA, HZB and HZC curves as calculated by the program.
(VAX/FORTRAN/PLOT10)

14. Stability Test Waterline Fit Program (WATERLINE). This program calculates both a straight line and curved line for hog or sag using the polynomial regression equation. Input for the program is read from a file created from the freeboard and draft data taken during an inclining test or deadweight survey. A display of the data points and the waterline generated by the program is included in the output.
(VAX/FORTRAN/PLOT10)

15. Interactive Wireframe Graphics Program (PICTURE). This program displays a wireframe model of a SHCP or STAAF86 offsets file at any desired combination of rotation angle (heading), mean draft, trim and heel angle. It also has the option to zoom on the picture for detailed analysis. No plot file is created.
(VAX/FORTRAN/PLOT10)

16. SHCP Output Plotting Program (PLOT). The PLOT viewing program version 2.0 is used to view and examine the plotted output from SHCP. Output plots include: Curves of Form, Floodable Length, Body Plan, Waterline Plan, Isometric Plan. These plots can also be sent to the Calcomp Plotter.
(VAX/FORTRAN/PLOT10)

2.C.17. Stability Analysis Graphic Display (SAGD). This program provides a means of checking the accuracy of the SHCP damage compartment description data on a graphics computer terminal. A SHCP model can be viewed interactively at a cut through the model in each of the primary views, side, top and front. The program SAGD uses the same file as required for executing the SHCP. The record formats of the input file are detailed in the SHCP User's Manual. A plot file is not created.

(VAX/FORTRAN/PLOT10)

D. Structural Programs.

1. CGSCORES. This is a motion/loads program currently capable of analyzing monohull vessels in waves. It is an expanded version of a program developed by the Ship Structure Committee (SSC) in the early 1970's. The Coast Guard's version was developed by Hoffman Maritime Consultants of Glen Head, New York as a proprietary program. It is configured in two mainline programs.

   a. STATIC. This program takes SHCP hull definition as input. Using a simple four-to-seven line string, the user can balance the vessel by longitudinal center of gravity (LcG)/weight, drafts, or weight distribution curves, and can obtain still water bending moment and shear as well. The output can be obtained either from teletype or high-speed printer. The static balancing may take numerous iterations by the user; when this is done, the input file for the loads/motion program can be generated.

   b. SCOMOT. This program utilizes the data file generated by STATIC and is modified by the user for a specific run. A variety of computations can be performed with SCOMOT, including displacements; velocities or accelerations at any location on the vessel; and vertical, horizontal, and torsional bending moments along the length of the hull. The wave loadings applied to response amplitude operators (RAO's) include simple height and period (using Pierson-Moskowitz and International Ship Structures Congress (ISSC) spectral equations), fetch limited (JONSWAP), or spectral families. SCOMOT generates long-term bending moments used for lifetime extreme value computations.

   (VAX/FORTRAN)

2. Graphics-Oriented Interactive Finite Element Timesharing System (GIFTS). This program was developed by the University of Arizona, under principal sponsorship of the Office of Naval Research and the Coast Guard. It is presently maintained by Government contract with the University of Arizona at Tucson. It is intended for use on minicomputer and interactive systems. GIFTS is actually a package of individual programs that are run in sequence to perform a structural analysis. Graphical output can be viewed at various points in the analysis, as during model generation and loading. The following structural analyses can be performed through GIFTS:

2.D.2. a. Static analysis of problems with two- and three-dimensional trusses, frames, membranes, and shells; axisymmetric solids under axisymmetric and non-axisymmetric loading; and mixed boundary conditions (forces and displacements).

b. Analysis by substructuring and constrained substructures. These may be constructed of any available elements and assembled any number of tines.

c. Free vibration analysis, including natural frequencies and mode shapes, superposition of modes, and stresses associated with the modes.

d. Transient response analysis in which time-varying loads may be applied. Deflected shapes and stresses are calculated for specified times.

GIFTS may be used as a pre- or post-processor for other finite element programs, to take advantage of excellent model generation and the efficient problem display and solution capabilities of the large core program. The University of Arizona offers a one-week workshop of indoctrination in the use of GIFTS and finite element analysis.

(PC/NO SOURCE CODE)

3. FLEXSM. This program computes the strength of a beam, such as a midship section, under extreme loading when parts of the section lose strength due to buckling. A description of the program and its applications are contained in the Proceedings of the 1980 SNAME STAR Symposium. Program development was spurred by inconsistency between predicted and actual performances of certain river tank barges, which buckled under loadings that section modulus calculations had indicated they could resist. A preprocessor has been developed to generate the midship section and other modeling data interactively. The model can be displayed graphically on the Textronic terminal. FLEXSM is commonly used in the MSC for section modulus calculations.

(VAX/FORTRAN/PLOT10)

4. MAESTRO. MAESTRO is a computer program for rationally-based optimum design of large, complex thin-walled structures. MAESTRO produces an optimum design based on any designer-specified measure of merit such as weight, cost, vertical center of gravity, or any combination of these. The primary purpose of MAESTRO is design, but it can be used to analyze existing structure (or proposed design) using just the analysis and evaluation portions of the program and not the optimization portion. The program was initially developed for ship structures, but has now been generalized to deal with virtually any thin-walled structure, including semi-submersibles and other types of floating platforms, box girder bridges, road and rail vehicles, and the larger types of aircraft. MAESTRO models are composed of modules representing various sections of

2.D.4. (cont'd) the structure, which are defined in terms of strakes, girders and pillars. The following limit states are evaluated in the analysis portion of the program:

a. Panel Collapse - Stiffener Failure;

b. Panel Collapse - Combined Buckling;

c. Panel Collapse - Membrane Yield;

d. Panel Collapse - Stiffener Buckling;

e. Panel Yield - Tension, Flange;

f. Panel Yield - Tension, Plate;

g. Panel Yield - Compression, Flange;

h. Panel Yield - Compression, Plate;

i. Panel Yield - Plate Bending;

j. Panel Serviceability - Transverse Buckling;.

k. Panel Serviceability - Longitudinal Buckling;

l. Girder Collapse - Tripping;

m. Girder Collapse - Compression, Flange;

n. Girder Collapse - Compression, Plate;

o. Girder Yield - Bending, Flange;

p. Girder Yield - Bending, Plate;

q. Girder Yield - Tension; Flange;

r. Girder Yield - Tension, Plate;

s. Frame Collapse - Plastic Hinge;

t. Frame Yield - Compression, Flange;

u. Frame Yield - Tension, Flange;

v. Frame Yield - Compression, Plate; and

w. Frame Yield - Tension, Plate.

2.D.4. (cont'd) MAESTRO models can be plotted or displayed in an isometric form from any angle, including the magnified deflections, using the accompanying program, FEMPlot.
(VAX/FORTRAN/PLOT10)

5. Structural Analysis Code Kit (SACK). This is a collective group of structural computer programs which solve typical problems encountered in analysis and design. The user is expected to be familiar with structural analyses Typically found in textbooks or an engineering school curriculum. These programs are free from proprietary limitations and are smaller in scope than large commercial programs. The programs are very simple to use and understand and will not become obsolete when new building codes are developed and updated. SACK programs aid in the analysis phase of structures and give numerical deflections, moments, shears and axial loads. The results are used in turn to evaluate members in the design phase using current building codes to decide if acceptable member sizes are appropriate and safe. The following programs are available in SACK:

   a. CONTBM - Continuous Beam Analysis;

   b. PLFRAME - Plane Frame Analysis;

   c. PLTRUSS - Plane Truss Analysis;

   d. GRFRAME - Grid Frame Analysis;

   e. STRUSS - Space Truss Analysis; and

   f. SFRAME - Space Frame Analysis.
(PC/NO SOURCE CODE)

6. Independent Tank Barge Analysis Program (BARGE). This program computes the tank-barge interactive forces, tank shears and tank moments of a grounded barge carry inS independent tanks on saddle supports. Various conditions of loading can be obtained using uniform, triangular and concentrated loads. The technique is formulated in "Reactions on Independent Carso Tanks," Finn C. Michelsen and Ullman Kilgore, Department of NAME, University of Michigan, September 1968. The barge is treated as a hinged-free beam on an elastic foundation and the tanks are treated as hinged-hinged beams on the barge. The equations for simple beams are then solved using initial parameter functions.
(VAX/FORTRAN)

E. Pressure Vessel Analyses.

1. ZICK-1. Calculates stresses in larger horizontal cylindrical pressure vessels on Two saddle supports.
(PC/Basic)

2.E.2. MULTISADL. Calculates stresses in larger horizontal cylindrical pressure vessels with more than two saddle supports. (PC/Basic)

F. Developmental Programs.

1. Plan Review System. The Plan Review System software package of Naval Architecture programs is currently under development and will be completed in 1990. It is a comprehensive CAD/interactive graphics oriented system with digitizing and plotting capabilities. It will perform static stability calculations and evaluate output according to the appropriate Coast Guard stability criteria. The package also includes a motions analysis module which can be used for casualty analysis and novel craft plan review. The following Coast Guard Stability Criteria are currently incorporated into the Plan Review System:

a. Energy Criteria for Vessels of Unusual Proportions and Form;

b. CM Weather Criteria;

c. MODU Intact Criteria;

d. MODU Damage Criteria;

e. Passenger Vessel Intact Criteria;

f. Deck Cargo Barge Criteria;

g. Tug Boat Criteria;

h. Towing Vessel Criteria;

i. Catamaran Passenger Sailing Vessel Criteria;

j. Mono-hull Passenger Sailing Vessel Criteria;

k. Lifting Vessel Criteria;

l. Subchapter O Barge Criteria;

m. Subchapter O Ship Criteria;

n. Subchapter D Barge Criteria;

o. Subchapter O Gas Ship Criteria;

p. Passenger Vessel Damage Criteria;

2.F.1. q. Open Hopper Barge Criteria;

r. Navy Wind and Wave Criteria;

s. Navy SWATH Criteria; and

t. Cargo Vessel Probabilistic Damage Criteria.

The Plan Review System generates wire frame graphics for both the hydrostatic and wind models. Output graphics include righting energy, wind heeling and allowable VCG curves for a range of operating conditions.

(VAX/FORTRAN)

G. Database Programs.

1. AIMS. The AIMS program is used in the Marine Safety Center to manage the day-to-day incoming and outgoing mail. Incoming mail is entered into a database via menus. Reports can be generated at any time to present the current backlog of the entire Marine Safety Center, or the backlog of a particular plan review officer. Work statistics are also generated using AIMS. Outgoing mail is logged out using menus to update the database in a manner similar to the incoming mail entering process.

(VAX/AIMS)

2. dBASE III PLUS. The dBASE III PLUS program is used to generate lists of Approved Cargoes for Tank Vessels based on the physical characteristics of a given tank group. Data is stored in a relational database. The main program has an interactive user interface, offering a full screen editing of all input information. Once the physical parameters of the tank groups have been defined, the program will compile a list of all chemicals allowed from 46 CFR 153, Table 1. Fire protection requirements may also be applied to this list. The final output is an alphabetical listing of cargoes and their respective carriage requirement, by tank group. These lists can be compiled for an individual tank group, or all tank groups in batch mode.

(PC/dBASE III PLUS)

MARINE SAFETY MANUAL

CHAPTER 3. ENGINEERING SYSTEMS

CONTENTS

SECTION		PAGE
3.A.	Introduction	3-1
3.A.1.	Content and Purpose	3-1
3.A.1.a.	Purpose	3-1
3.A.1.b.	Content	3-1
3.A.2.	Overview of Changes	3-1
3.A.2.a.	Introduction	3-1
3.A.2.b.	Overview of Changes	3-1
3.A.2.c.	Specific Changes	3-2
3.A.2.d.	The Future of MSM IV Ch3	3-4
3.A.2.e.	Providing Input	3-5
3.A.3.	Scope	3-5
3.A.3.a.	Engineering Services	3-6
3.A.3.b.	Interfaces	3-6
3.B.	Plan Review	3-7
3.B.1.	Plan Review of Mechanical Systems	3-7
3.B.1.a.	Introduction	3-7
3.B.2.	Plan Review of Electrical Systems	3-7
3.B.2.a.	Introduction	3-7
3.B.2.a.(1)	Objectives	3-7
3.B.2.a.(2)	General Procedures	3-8
3.B.2.a.(3)	Handling of “Existing” Vessels	3-8
3.B.2.b.	Plan Review Guidance	3-8
3.B.2.b.(1)	Introduction	3-8
3.B.2.b.(2)	One-Line Diagram Reference Drawing	3-9
3.B.2.b.(3)	Operating Load Factors	3-14
3.B.2.b.(4)	Power And Lighting Transformers	3-21
3.B.2.b.(5)	Semiconductor Controlled Rectifiers (SCR).	3-21
3.B.2.b.(6)	Electrical Installations In Hazardous Locations	3-23
3.B.2.b.(7)	AC Motor Circuits	3-35
3.B.2.b.(8)	Tables, Diagrams, And Formulas	3-41
3.C.	Equipment	3-50
3.C.1.	Acceptable Equipment	3-50
3.C.1.a.	Introduction	3-50
3.C.1.b.	Acceptance Standards	3-52
3.C.1.c.	Testing	3-56
3.C.2.	Equipment Lists, formally COMDTINST M16714.3.	3-56
3.C.2.a.	Introduction	3-56
3.C.2.b.	Application of Listings	3-57
3.C.2.c.	Limitations of Listings	3-57
3.C.2.d.	Approvals Under Subchapter Q	3-57
3.C.3.	Engineering Applications for Pollution Prevention	3-59
3.C.3.a.	Marine Sanitation Devices (MSDs)	3-59
3.C.3.b.	Oily Water Separators (OWS)	3-60
3.C.3.c.	Incinerators	3-60
3.C.3.d.	Pressure-Vacuum Relief Valves.	3-62
3.C.4.	Special Equipment Approvals	3-63
3.C.4.a.	General	3-63
3.C.4.b.	Quick-Disconnect Couplings	3-63
3.C.4.c.	Flame Barriers	3-63
3.C.4.d.	Navigation Equipment	3-64

CONTENTS

SECTION		PAGE
3.C.4.e.	Resiliently Seated Valves	3-64
3.D.	Vessel Inspection Alternatives	3-65
3.D.1.	References	3-65
3.D.2.	ACP Supplements	3-66
3.E.	Mechanical Systems	3-66
3.E.1.	Engineering Materials	3-66
3.E.1.a.	Program Philosophy	3-66
3.E.1.b.	Evaluation Of Materials	3-67
3.E.1.c.	High Temperature Service Materials	3-70
3.E.1.d.	Low—Temperature Service Materials	3-72
3.E.1.e.	Corrosion	3-74
3.E.1.f.	Use Of Stainless Steel Materials	3-76
3.E.2.	Boilers, Pressure Vessels, And Similar Equipment	3-80
3.E.2.a.	General Provisions	3-80
3.E.2.b.	Propulsion Boilers	3-82
3.E.2.c.	Auxiliary Boilers	3-84
3.E.2.d.	Unfired Boilers	3-85
3.E.2.e.	ASME Code, Sections I And IV	3-85
3.E.2.f.	Thermal Fluid Heaters (TFHs)	3-87
3.E.2.g.	Pressure Vessels	3-89
3.E.2.h.	Heat Exchangers	3-98
3.E.2.i.	Authorized Inspectors	3-100
3.E.2.j.	Foreign Manufacturers Of New Equipment	3-101
3.E.3.	Piping Systems	3-101
3.E.3.a.	Introduction	3-101
3.E.3.b.	Piping Components	3-101
3.E.3.c.	Philosophy	3-103
3.E.3.d.	Impact of SOLAS	3-103
3.E.3.e.	Design Standards	3-103
3.E.4.	Specific Piping Systems	3-104
3.E.4.a.	Vital Systems	3-104
3.E.4.b.	Hydraulic System	3-105
3.E.4.c.	Low-Temperature Systems	3-105
3.E.4.d.	Use of ANSI B16.5 And B16.34	3-106
3.E.5.	Steering Gear	3-106
3.E.5.a.	Introduction	3-106
3.E.5.b.	Regulatory Developments	3-107
3.F.	Vital System Automation (46 CFR 62)	3-107
3.F.1.	Introduction	3-107
3.F.2.	NVIC’s 1-69,1-78, and 6-84	3-107
3.F.3.	Automatic Auxiliary Boilers (46 CFR 63)	3-107
3.G.	Electrical Systems	3-108
3.G.1.	Introduction	3-108
3.G.2.	Equipment	3-111
3.G.3.	Grounded Systems and Ground Detection (46 CFR 111.05)	3-114
3.G.4.	Power Supply (46 CFR 111.10)	3-118
3.G.5.	Generator Construction and Protection (46 CFR 111.12)	3-120
3.G.6.	Batteries and Battery Installations (46 CFR 111.15)	3-121
3.G.7.	Transformers (46 CFR 111.20)	3-123

CONTENTS

SECTION		PAGE
3.G.8.	Switchboards (46 CFR 111.30 – 25 & 111.30-27)	3-126
3.G.9.	Power Semiconductor Rectifier Systems (SCRs)	3-129
3.G.10.	Electrical Propulsion (46 CFR 111.35-1)	3-130
3.G.11.	Panelboards (46 CFR 111.40)	3-130
3.G.12.	Circuit Protection Devices	3-131
3.G.13.	Fault Current Analysis & Coordination (46 CFR 111.52)	3-135
3.G.14.	Wire and Cable (46 CFR 111.60)	3-138
3.G.15.	Motor Circuits (46.CFR 111.70)	3-145
3.G.16.	Navigation Lights (46 CFR 111.75-17)	3-156
3.G.17.	Hazardous Locations (46 CFR 111.105)	3-158
3.G.18.	Industrial Systems (46 CFR 111.107)	3-178
3.G.19.	Emergency Lighting and Power Systems (46 CFR 112)	3-179
3.G.20.	Communication and Alarm Systems	3-182
3.H.	Novel Vessel Design	3-185
3.H.1.	High Speed Craft	3-185
3.H.2.	Deep Water Ports (DWP’s)	3-186

This page intentionally left blank.

CHAPTER 3. ENGINEERING SYSTEMS

A. Introduction.

1. Content and Purpose of the Marine Safety Manual, Vol. IV Chapter 3 (MSM IV CH 3)

a. Purpose. The purpose of the Marine Safety Manuals (MSM) is described in Marine Safety Manual Volume I, Administration and Management, COMDTINST M16000.6 (series), Chapter 1, Section B (available online, see note below). The Marine Safety Manual, Volume IV, Technical, COMDTINST M16000.9 (series), Chapter 3 is intended to provide additional technical information and explanation of Marine Safety engineering systems regulations.

b. Content. The primary content of this chapter is provided to augment Title 46, Code of Federal Regulations (CFR), Subchapters F and J (46 CFR 50-64 and 46 CFR 110-113).

Section A of this chapter, "Engineering Scope and Program Interfaces", provides further detail of the purpose, application and content of this chapter.

Locating the Marine Safety Manuals (MSM) on the Internet: The MSM is accessible through the Internet by first locating the U.S. Coast Guard home page (http://www.uscg.mil/), then select "Marine Safety" under Missions, then "Site Map". Links to the MSM as well as other useful sites including the "G-MSE Office of Design and Engineering Standards" are available there. The Marine Safety Manuals are also available on the USCG Directives System at: http://www.uscg.mil/ccs/cit/cim/directives/welcome.htm.

Locating Navigation and Vessel Inspection Circulars (NVICs) on the Internet: NVICs may be located from the U.S. Coast Guard home page by following the same steps listed above. The direct link is: http://www.uscg.mil/hq/g-m/nvic/index.htm.

2. Overview of Changes to Marine Safety Manual, Volume IV, Technical, COMDTINST M16000.9 (series), Chapter 3 (MSM IV CH 3)

a. Introduction. This revision is a first step in an ongoing project that will be completed in two phases. This phase of the project focuses on areas that are most obviously in need of revision, and can be corrected rapidly. The next phase will be a more detailed revision to add content regarding new systems, and to incorporate the useful information from mechanical and electrical related Navigation and Vessel Inspection Circulars (NVICs).

b. Overview of Changes. Major changes from the previous MSM IV Ch3:

(1) Updated CFR references
(2) Sections re-arranged to coincide with relative location of information in CFR
(3) Deleted obvious outdated information
(4) Changed point of contact information (ex: Commandant (G-MTH) is now Commandant (G-MSE))

3.A.2.b (5) Added "Guide for Electrical Installations on Merchant Vessels and Mobile Offshore Drilling Units", COMDTPUB P16700.4, NVIC 2-89 content to the Electrical Systems section
(6) Removed outdated parts of the Electrical Plan Review section
(7) Deleted Section 3.Q, Nuclear Systems, no longer relevant
(8) Deleted Section 3.D, Regulations and References, outdated information

c. Specific Changes. Cross-Referenced to Old-MSM IV Chapter 3

NOTE: "Previous MSM IV CH3" refers to sections as they existed in the version of MSM IV Chapter 3 that this edition is replacing (publication date unknown, last updated 27 June 1986)

(1) MSM Vol IV, CH 3 Section i, Prologue
  (a) Previous MSM IV Ch3 Sections: N/A, this is a new section
  (b) Alterations: All new content, adapted from MSM Vol II Prologue
(2) MSM Vol IV, CH 3 Section A, Engineering Scope and Program Interfaces
  (a) Previous MSM IV Ch3 Sections: Adapted from previous MSM Vol IV, CH 3, Section A, Engineering Scope and Program Interfaces.
  (b) Alterations:
    i. Updated office designations (ex: Commandant (G-MSE) replaced Commandant (G-MTH-2))
    ii. Updated Commandant (G-MSE-3) responsibilities
(3) MSM Vol IV, CH 3 Section B, Plan Review
  (a) Previous MSM IV Ch3 Sections: Adapted from previous MSM Vol IV, CH 3, Section C, Plan Review of Electrical Systems.
  (b) Alterations:
    i. Added Section 1, Plan Review of Mechanical Systems
    ii. Updated CFR references in Section 2, Plan Review of Electrical Systems
    iii. Removed Table 3-5, List of Electrical Hazard Group Classifications, more current version available in 46 CFR 151.05
(4) MSM Vol IV, CH 3 Section C, Equipment
  (a) Previous MSM IV Ch3 Sections:
    i. MSM Vol IV, CH 3, Section E, Acceptable Equipment.
    ii. MSM Vol IV, CH 3, Section F, Equipment Lists.
    iii. MSM Vol IV, CH 3, Section K, Special Engineering Applications for Pollution Prevention.
    iv. MSM Vol IV, CH 3, Section M, Special Equipment Approvals.
  (b) Alterations:
    i. 3.C.1.a transferred in FAQ from electrical section
    ii. 3.C.1.b changed "need for factory inspections…" to "Coast Guard reserves the right… to conduct factory inspections."
    iii. 3.C.1.b inserted information from Section 2 of NVIC 2-89, Meeting Referenced Standards
    iv. 3.C.1.b (1) updated introduction to correct reference to fuses and hazardous area equipment
    v. 3.C.1.c added CFR reference for independent testing lab

3.A.2.c(4)(b)

vi. 3.C.2.a and b: stated COMDTINST M16714.3 no longer published in hard copy
vii. 3.C.2.c Added an example of an equipment approval number
viii. 3.C.3.a(1) changed title 46 to title 33. Added type III statement.
ix. Added 3.C.a(5) MSD's prior to 1/30/76
x. 3.C.4.a stated that Affidavit system ended and incl ref to applicable FR.
xi. 3.C.4.b(2) quick disconnect couplings are no longer reviewed by MSE-3
xii. 3.C.4.c(2) changed IG to 1G and changed tank contents to "heaviest product carried".

(5) MSM Vol IV, CH 3 Section D, Vessel Inspection Alternatives
(a) Previous MSM IV Ch3 Sections: This is a new section
(b) Alterations:
i. All new content, will be expanded on in Phase 2 of MSM Vol IV, Ch 3 Update.

(6) MSM Vol IV, CH 3 Section E, Mechanical Systems
(a) Previous MSM IV Ch3 Sections:
i. MSM Vol IV, CH 3, Section J, Engineering Materials
ii. MSM Vol IV, CH 3, Section I, Boilers, Pressure Vessels, and Similar Equipment
iii. MSM Vol IV, CH 3, Section G, Piping Systems
iv. MSM Vol IV, CH 3, Section H, Specific Piping Systems
v. MSM Vol IV, CH 3, Section O, Steering Gear
(b) Alterations:
i. Updated responsible offices and their staff symbols.
ii. Deleted information no longer relevant.

(7) MSM Vol IV, CH 3 Section F, Automation
(a) Previous MSM IV Ch3 Sections:
i. MSM Vol IV, CH 3, Section L, Automation.
(b) Alterations:
i. Updated to include 46 CFR Part 62
ii. Updated incinerator construction requirements
iii. Deleted outdated references to 46 CFR Part 63

(8) MSM Vol IV, CH 3 Section G, Electrical Systems
(a) Previous MSM IV Ch3 Sections:
i. MSM Vol IV, CH 3, Section B, Overview of Electrical Systems.
(b) Alterations:
i. Inserted majority of NVIC 2-89, with some modifications. Major alterations to NVIC 2-89 content inserted:
a. Altered order of topics covered to correspond with Subchapter J
b. Corrected or removed outdated references
c. Deleted information superseded by recent CFR changes
d. Moved Section 2 of NVIC 2-89, 'Referenced Standards and Equipment Required to be Listed or Labeled' to Equipment section of MSM (3.C.1)
e. Revised Hazardous Location guidance, (NVIC 2-89 Section 7, MSM 3.G.6.d) to highlight differences between zonal and divisional classifications of hazardous areas

3.A.2.c(8)(b)i.

f. Revised Wire and Cable guidance (NVIC 2-89 Section 8, MSM 3.G.14.b) reflecting alterations to 46 CFR 111.60, clarifying UL listing of shipboard cable, and providing additional guidance for MIL-C-915 cables

g. Revised Components and Equipment guidance (NVIC 2-89 Section 9, MSM 3.G.16.a), clarified that regulations of this part do not apply to aids to navigation

ii. Added table 3G-1, Applicable Electrical Regulations

iii. Added new section on Gel Cell Batteries (3.G.6.c) to provide a brief description of new equipment that may be encountered

iv. Added guidance regarding use of emergency generator to 3.G.19.a based on IACS and SOLAS determinations

v. Added guidance regarding emergency loads to 3.G.19.c based on public question

vi. Added alarm signal sound pressure level guidance to 3.G.20.d, provided distances based on public question

(9) MSM Vol IV, CH 3 Section H, Novel Vessel Designs

(a) Previous MSM IV Ch3 Sections:

i. MSM Vol IV, CH 3, Section N, Novel Vessel Designs.

ii. MSM Vol IV, CH 3, Section P, Deepwater Ports.

(b) Alterations:

i. Updated office designations (ex: Commandant (G-MSE-3) replaced Commandant (G-MTH-2)).

d. The Future of MSM IV Ch3. The second phase of the MSM Vol IV, Ch3 revision will include a more detailed review and update of the existing text, as well as the addition of new topics. Phase two changes will likely include:

(1) Changing the format to that used by the Marine Safety Manual Volume II, Material Inspection, COMDTINST M16000.7A (series)

(2) Update to reflect latest regulations and policy.

(3) Guidance for new vessel types such as FPSOs.

(4) Descriptions and explanations of new technologies inspectors may encounter, such as cycloconverters and fuel cells.

(5) Insertion of the useful information contained in the electrical and mechanical NVICs, the same approach as used with "Guide for Electrical Installations on Merchant Vessels and Mobile Offshore Drilling Units", COMDTPUB P16700.4, NVIC 2-89 in this revision. These NVICs include:

1-69, Automated Main and Auxiliary Machinery
1-71, Repair of Boiler Safety Valves
2-71, Pipe Stress Analysis Calculations; Procedure for Submission of
4-71, Valves Employing Resilient Material
7-73, Main Propulsion Boiler Automation
7-74, Oil-Water Separators; Acceptance of
1-78, Automation of Offshore Supply Vessels of 100 Gross Tons and Over
2-79, Aluminum Bus Bars
1-81, Guidance for Enforcement of the Requirements of the Port and Tanker Safety Act of 1978(PTSA) Pertaining to SBT,

3.A.2.d(5) 1-81, (cont'd) CBT, COW, IGS, Steering Gear, and Navigation Equipment for Tank Vessels
9-82, MSD Certification
13-83, Coast Guard Retention of Commercial Vessel Plan Review Case Files
4-84, Equivalent Determination for Existing, Installed Oil-Water Separators which have Not Received U.S. Coast Guard Approval
6-84, Automated Main and Auxiliary Machinery; Supplemental Guidance On
8-84, Recommendations for the Submittal of Merchant Vessel Plans and Specifications
9-84, Electrical Installations in Agricultural Dust Locations
11-86, Guidelines Governing the Use of Fiberglass Pipe (FGP) on Inspected Vessels
5-89, Guidelines for Nondestructive Testing of Pressure Vessel Type Cargo Tanks Aboard Tank Barges
10-92, Coast Guard Recognition of Registered Professional Engineer Certification of Compliance with Coast Guard Requirements
11-92, Guidance for Acceptance of the National Board of Boiler and Pressure Vessel Inspectors (NBBI) National Board Inspection Code (NBIC) for Repairs and Alterations to Boilers and Pressure Vessels
5-93, Guidance for Certification of Passenger Carrying Submersibles

e. Providing Input. Requests or recommendations, or even recommended text from Coast Guard field units regarding the phase two changes would be greatly appreciated and given full consideration. All levels of the "M" Program are encouraged to participate in making the MSM a better tool for the M Community—Coast Guard, industry, and the general public.

To provide input via e-mail on the Coast Guard SWIII:
Open the Global Address List
Select “Lst-G-MSE-3”, e-mail to any person on that list or to the whole division.

To provide input via e-mail from outside the Coast Guard Data Network:
(1) Indicate “MSM Comment” in the title and send to lst-g-msm-3@comdt.uscg.mil

To mail input, send to:
U.S. Coast Guard
Systems Engineering Division, Commandant (G-MSE-3), Room 1308
2100 Second St., S.W.
Washington, DC 20593-0001

3. Scope. The contents of this chapter are directly related to the responsibilities of the Systems Engineering Division, Commandant (G-MSE-3). This division is responsible for marine and electrical engineering, and certain equipment approvals. The functions of Commandant (G-MSE-3) are to:

3.A.3 a. Engineering Services. Provide engineering service to the Marine Safety Center (MSC), and marine safety offices (MSO's), other divisions within the Office of Design and Engineering Standards, Commandant (G-MSE), and offices at Coast Guard Headquarters.

(1) Regulations. Develop and maintain regulations that promote the protection of life at sea, property, and the marine environment to the extent permitted and required by law in the areas of marine and electrical engineering. Initiate and guide research to support existing or envisioned engineering regulations, taking into account the need to keep abreast of advancing technology in materials, fabrication, and equipment.

(2) Application. Provide technical advice and guidelines to Coast Guard offices in the application of the Marine Safety Manual and Navigation and Vessel Inspection Circulars (NVIC's).

(3) Committees. Participate actively in national technical committees and societies such as the American Society of Mechanical Engineers (ASME), American National Standards Institute (ANSI), American Society for Testing and Materials (ASTM), Society of Naval Architects and Marine Engineers (SNAME), National Electrical Manufacturers Association (NEMA), and Institute of Electrical and Electronic Engineers (IEEE).

(4) International. Participate actively in international technical organizations such as the International Maritime Organization (IMO), the International Electrotechnical Committee (IEC), and the International Organization for Standardization (ISO).

(5) Liaison. Maintain close liaison with other government agencies, and classification societies such as the American Bureau of Shipping (ABS), Det Norske Veritas (DNV), Lloyd's Register of Shipping (LR), and Germanischer Lloyd (GL).

(6) Evaluation. Evaluate proposals from shipbuilders, design agents, engineers, and equipment manufacturers concerning systems and equipment that do not meet the regulations, but which may provide equivalent protection to life, property, and the environment.

(7) Approvals. Review and approve the design and construction details of boilers and certain components for piping and electrical systems.

(8) Investigation. Assist the Office of Investigations and Analysis, Commandant (G-MOA), in the review of marine casualty investigations that result from failure involving an aspect of marine or electrical engineering.

b. Interfaces. In the accomplishment of their daily tasks, members of Commandant (G-MSE-3) must interact with personnel both inside and outside the Coast Guard. The sections below summarize some of the more common contacts:

(1) At Coast Guard Headquarters. The Systems Engineering Division provides technical support services to other divisions of the

3.A.3.b (1) (cont'd) Commandant (G-MSE). These services consist primarily of evaluating installations for new and existing merchant vessels, reviewing repair procedures, assessing casualties, and reviewing and monitoring regulation and research and development projects. Commandant (G-MSE-3) works closely with the Office of Compliance, Commandant (G-MOC), in areas of equipment approval, installation and repair; with the Office of Investigations and Analysis, Commandant (G-MOA), in casualty assessment and National Transportation Safety Board (NTSB) responses as well as in matters relating to manning of automated engine rooms. In many instances, responses to industry are the result of efforts of two or more divisions.

(2) With Field Units. The Systems Engineering Division provides technical services to the Marine Safety Center (MSC) through the development of regulations, development of policy, evaluation of new developments, and evaluation of inquiries and appeals in the machinery and electrical areas. Commandant (G-MSE-3) also provides technical services to field inspection offices throughout the country as requested.

(3) With Commandant (G-LRA) and Commandant (G-MSR). The Systems Engineering Division normally has several regulatory projects underway at any given time. For each of these regulatory projects, the division provides a project manager who works with the project attorney from the staff of the Office of Regulations and Administration, Commandant (G-LRA), and the Office of Standards Development, Commandant (G-MSR), to produce a completed regulation package. This requires close liaison between the division and Commandant (G-LRA) and Commandant (G-MSR), from formulation of the work plan, through notice and public comment periods, to publication of Final Rules.

B. Plan Review.

1. Plan Review of Mechanical Systems.

a. Introduction. Plan review and approval of individual vessels falls under the cognizance of the Coast Guard's Marine Safety Center (MSC). Marine Safety Center guidance regarding mechanical system plan review may be found online at: http://www.uscg.mil/hq/msc/index.htm. If this Internet address is no longer valid the MSC web page can be located by first going to the U.S. Coast Guard home page (http://www.uscg.mil/) and completing a search for the “Marine Safety Center”.

2. Plan Review of Electrical Systems.

a. Introduction.

(1) Objectives. Plan review is performed to ensure that the electrical arrangement, materials, and installation as shown on the plans comply with the applicable laws and regulations for the vessel or unit. The primary purposes of the electrical requirements are to arrive at adequate and reliable shipboard electrical systems, the components of which provide safety to personnel from electrical shock, and to minimize the danger of

3.B.2.a (1) (cont'd) fire originating from within the electrical system. After the initial certification of a vessel or unit by the Coast Guard, subsequent plan review may be required due to electrical repairs or alterations affecting the safety of the vessel, its equipment, and crew. If considered necessary by the officer in charge, marine inspection (OCMI), drawings must be approved before work is started. Repairs to existing installations must meet the regulations in effect on the date of the original installation or the regulations in effect on the date of the repair.

(2) General Procedures. Guidance listed in section 3.B.1.a above also applies for finding electrical system plan review guidance online.

Prior to a vessel's construction, plans such as those listed in 46 CFR 177.05 for small passenger vessels, and in 46 CFR 110.25 are reviewed. The plans listed in those sections are general in character, but include all plans that normally show construction and safety features coming under the cognizance of the Coast Guard. In the case of a particular vessel, all of the plans enumerated may not be applicable; it is intended that only those plans and specifications be submitted as will clearly show the vessel's arrangement, construction, and required equipment. Because the regulations give only a general listing of the plans and specifications that require review by the Coast Guard, "Recommendations for the Submittal of Merchant Vessel Plans and Specifications", COMDTPUB P16700.4, NVIC 8-84, was published to provide further clarification. This circular is a detailed guide on recommended plan submittal procedures. Some of the plans and specifications required by the Coast Guard are also necessary for the approval of construction by the American Bureau of Shipping (ABS) for vessels classed by that organization. In this regard, "Acceptance of Plan Review and Inspection Tasks Performed by the American Bureau of Shipping for New Construction or Major Modifications of U.S. Flag Vessels", COMDTPUB P16700.4, NVIC 10-82, CH-2, was published to provide information on ABS plan approval procedures intended to facilitate industry activities and reduce duplication of effort between the ABS and the Coast Guard.

(3) Handling of "Existing" Vessels. The regulations do not include requirements for vessels existing before the effective date of the regulation. Persons must refer to the regulations in effect for older existing vessels in order to determine construction requirements for those vessels.

b. Plan Review Guidance.

(1) Introduction. The intent of this section is to provide:

(a) Check-off lists for review of typical electrical plans;

(b) A reference for technical data, formulas, and principles used in routine plan review;

3.B.2.b(1) (c) Some items of policy; and

(d) An index for detailed reference information not contained in this guide or regulations.

This section is intended as a guide for the plan reviewer, and should not be considered as containing hard-and-fast requirements. The user's discretion should be applied during its application.

(2) One-Line Diagram Reference Drawing. The one-line diagram reference drawing, Figure 3-1, and the attached index, Figure 3-2, are provided as a directory to applicable regulations. This diagram is purely hypothetical. The item number on the diagram may be cross-referenced to the index to find a listing of applicable regulations. [NOTE: Unless otherwise indicated in Figure 3-2, references are to Title 46 CFR, as in "111.12."]

FIGURE 3-1
ELECTRICAL PLAN REVIEW GUIDE
TYPICAL ONE-LINE DIAGRAM

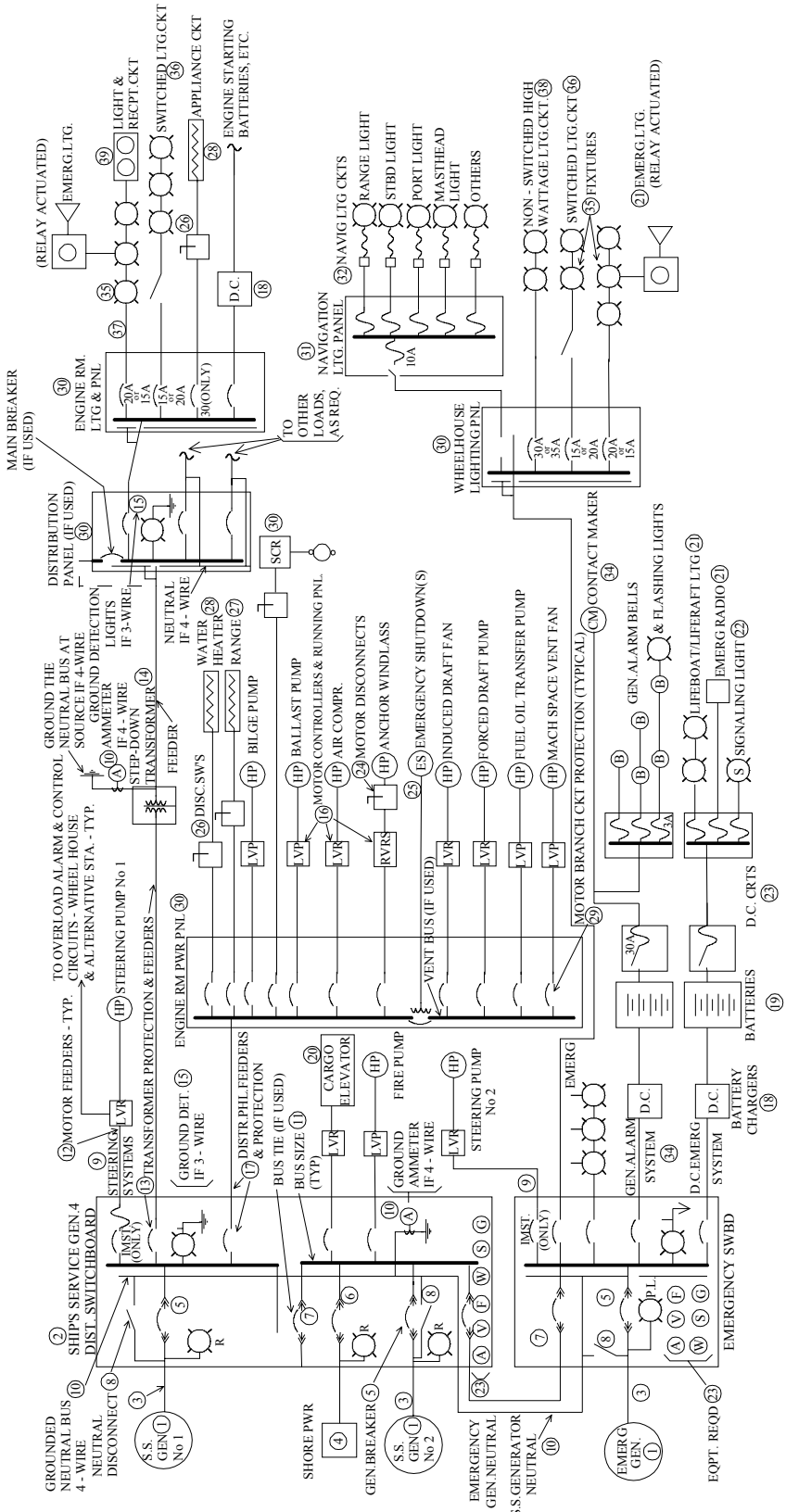

FIGURE 3-2

INDEX FOR REFERENCE DRAWING TO TITLE 46 CFR, NATIONAL ELECTRICAL CODE (NEC), INSTITUTE OF ELECTRICAL AND ELECTRONIC ENGINEERS (IEEE) STD. 45-1983, UNDERWRITERS LABORATORIES (UL), ETC.

ITEM	TITLE	REFERENCE*	SPECIFIC AREAS
1	Generators	111.12 112.50 111.12-7, -11	Ship's service Emergency Parallel operation
2	Generator & Distribution Switchboards	111.30	General
3	Generator Cables	111.60-3 111.60-7 111.60-5 & 111.12-9	Application Demand load Installation
4	Shore Ties & Connection Boxes	111.83	Construction
5	Generator Circuit Breakers	111.30-25 111.50-7 111.50-5(a) 111.12-11 111.54-1(a)(3)	Switchboard-mounted Enclosures Location Circuits & Protection Interrupting capacity
6	Shore Tie Circuit Breakers	111.30-25 111.50-5(a)(2) 111.54-1(a)(3)	Switchboard-mounted Switchboard-mounted Interrupting capacity
7	Bus Tie Circuit Breakers	111.60-7	Demand load
8	Generator Neutral Disconnects or Links	111.30-25(b)	Switchboard-mounted
9	Steering Systems	58.25 33 CFR 164.39	Steering apparatus Foreign tank vessels
10	Generator Neutral Grounding	111.05-17	Ship's service and emergency generator
11	Bus Sizes	IEEE STD 45-1983	Table A-27 & 111.30-19
12	Motor Feeders	111.60-7	

FIGURE 3-2 (cont'd)

ITEM	TITLE	REFERENCE*	SPECIFIC AREAS
13	Transformers, Feeders, and Protection	MSM Subparagraph 3.G.5	
14	Transformers, General	111.20	
15	Ground Detection	111.30-20(e)(1) 111.30-27(e) 111.05	
16	Motor Controllers	NEC 430-86 111.70-3(a) 111.70-3(b)&(c)	Location Enclosures Low voltage protection (LVP) and low voltage release (LVR) types
17	Distribution Panel Feeders	111.60-7 111.54-1(a)(3) 111.51	Demand loads Interrupting rating Selective operation
18	Battery Chargers	111.15-30 111.15-25	 Reverse current protection
19	Storage Batteries	111.15-1 111.15-5 111.15-10 111.15-5(f)-(g) 111.15-20 112.55	General Installation and arrangement Ventilation Corrosion protection Conductors Emergency power and lighting systems
20	Electric Elevators & Dumb Waiters	ANSI A17.1 & A17.1 111.91	Safety Code
21	Emergency Lights & loads	112.43 112.01-10 112.15	Emergency lighting systems Automatic systems Emergency loads
22	Signaling Lights	111.75-18	
23	Switchboard Instrumentation & Control Equipment Required	111.30-25	AC switchboards ship's service and emergency

FIGURE 3-2 (cont'd)

ITEM	TITLE	REFERENCE*	SPECIFIC AREAS
24	Disconnects (Motors)	111.70-1	
25	Emergency Shut Down	111.103	
26	Disconnects (Switching Means)	111.55	
27	Appliances	111.60-7 111.77	Demand loads Standard
28	Motor Circuit Protection	111.70-1	
29	Distribution Panelboards	111.40 111.50-5,-7	
30	Navigation Light Indicator Panels	111.75-17	
31	Semiconductor-Controlled Rectifier (SCR) Circuits	111.33	Electric propulsion
32	General Alarm Systems	113.25	
33	Lighting Fixtures	111.75-20 UL 1598A 111.05-3	Marine type Construction Grounding
34	15- or 20-Ampere Lighting Branch Circuits	111.75-5(e)	"Switched" lights and receptacles
35	Receptacle Circuits	111.79-1 111.05-3 UL 498 111.81	General Grounding Attachment plugs and receptacles Outlet boxes and fittings Cabinets and boxes

3.B.2.b (3) Operating Load Factors.

(a) Tables.

i. Sample Load Analysis (Figure 3-3).

ii. Typical Operating Load Factors (Figure 3-4).

(b) References.

i. U.S. Navy Design Data Sheet, DDS 310-1, "Design Details of Generating Plants."

ii. SNAME T & R Bulletin 3-11, "Marine Steam Power Plant Heat Balance Practices," Section 3.2.15.

iii. Marine Engineering, Harrington, 1971, pp. 607-609.

iv. NVIC 8-84, section 28.d.(1) (see paragraph 3.L.2 below).

(c) General Requirements. Ship's service generating plants must be sized for the anticipated operating load as required by 46 CFR 111.10-4. Emergency generators shall be sized to supply all loads simultaneously connected to it as required by 46 CFR 112.05-5. To determine if the generators are adequate, a load analysis is necessary and is required to be submitted for review by 46 CFR 110.25-1(b). Demand factors (d.f.) are essential to the load analysis but often can vary, as can be seen from the typical values in Figure 3-4. The individual characteristics of the vessel should be considered in the determination of demand factors. The review of the load analysis should determine if the:

i. Individual load factors used are reasonable.

ii. Application of the load factors is reasonable and thorough.

iii. Generating plant is adequate and in accordance with the applicable regulations.

(d) Considerations.

i. Loads can be classified by various operating conditions such as port, anchor, sea, functional, emergency, maneuvering, or cold start. For the purpose of plan review, only the normal sea load, maneuvering load and emergency load are considered, unless special considerations for the safety of the ship require otherwise (e.g., at sea cargo transfer (functional)).

ii. A motor may be oversized for its attached load and thus not operate at its rated capacity.

FIGURE 3-3
SAMPLE LOAD ANALYSIS

NOTE: All figures used are purely hypothetical.

DISTRIBUTION A	ATTACHED LOAD	DEMAND FACTOR	DEMAD LOAD	
Bilge Pump	5 KW	0	0	
Ballast Pump	10 KW	0.1	1	KW
A/C - Heater	10/20 KW	0.8	8/16	KW*
Cargo Circ. Pump	15 KW	0.6	9	KW
	Dist. A Total	0 + 1 + 16 + 9 =	26	KW

DISTRIBUTION B				
Steering Pump #1	10 KW	0.9	9	KW
Steering Pump #2	10 KW	0	0	**
Steering Control	1 KW	0.9	.9	KW
Bow Thruster	40 KW	0.4	16	KW
	Dist. B Total	9 + 0 + .9 + 1 =	25.9	KW

DISTRIBUTION C				
Main Deck Ltg. Fwd.	4 KW	0.5 ***	4	KW
Main Deck Ltg. Aft	4 KW	0.5		
Eng. Rm. Ltg. Port	2 KW	0.9 ***	3.6	KW
Eng. Rm. Ltg. Stbd.	2 KW	0.9		
	Dist. C Total	4 + 3.6 =	7.6	KW

DISTRIBUTION D				
Range	12 KW	0.4	4.8	KW
Water Heater	15 KW	0.6	9.0	KW
	Dist. D Total	4.8 + 9.0 =	13.8	KW

TRANSFORMER #1			
Dist. C	7.6 KW	1.0 @	.95
Dist. D	13.8 KW	Efficiency	****
Transformer 1 Total is 1.05 (1.0)(7.6 + 13.8)		= 26.9	KW

MAIN SWBD		
Dist. A	26	KW
Dist. B	25.9	KW
Transformer #1	26.9	KW
Generator Demand load	78.8	KW
Full load Gen. Capacity	85	KW

* Relationship exists, take larger load.
** One pump is the standby.
*** Similar loads given group factor.
*** Reduced efficiency increases demand load. typ. transformer eff .96-.99

FIGURE 3-4

TYPICAL OPERATING LOAD FACTORS

LOAD DESCRIPTION	NAVY FACTORS		MAR. ENG. FACTORS		SNAME
	Sea	Emerg	Sea	Emerg	Sea
Main Steering Gear Pump	0.3	0.3	0.1		0.2
Stby. Steering gear pump	0	0			
Steering gear servo. Pump	0.5	0.5			
Steering control	0.5	0.5	0.1		
Steering aux. Heater	0	0			
Shaft turning gear	0	0			
Stern tube bearing lube oil pump			0.5		
Main cond. Pump	0.9	0	0.4		0.75
Main circ. Pump	0.9	0	1.0		0.9
Aux. cond. Pump					0.9
Aux. circ. pump	0.6	0			0.9
Main feed pump					0.8
Main feed boost pump	0.9	0.5			
Emer. feed boost & transfer pump	0	0			0
Reserve feed transfer pump	0.2	0			0.5
Aux. condenser condensate pump			0		
Atm. Clean drain tank pump			0.6		
L.P. heater drain pump					0.65
L.P. steam gen. Feed pump			0.9		
Aux. boiler	0	0			
Main turb. gland exhauster	0.9	0	0.9		0.9
Aux. turb. gland exhauster	0.5	0			
F.W. Drain coll. Tank pump	0.6	0			0.6
Main L.O. purifier	0.3	0	0.9		0.35
Main feed L.O. pump	0.9	0	0.9	0.3	0.9
Stby. L.O. serv. pump	0	0.2		1.0	
L.O. transfer pump	0.1	0			0
L.O. cooler circ. pump					0.9
L.O. heater					0.1
F.O. service pump	0.9	0	0.4		0.85
F.O. transfer pump	0.1	0	0.1		0.1
F.O. stripping pump	0	0			
F.O. stripping drain and transfer pump	0.3	0			
Red. gear L.O. stby. pump	0	0			
Prop. hyd. stby. pump	0	0			
Elec. prop. exciter	0.9	0			
Elec. prop. equip. heater	0	0			
Prop. motor vent fan	0.9	0			
Prop. motor L.O. service pump	0.9	0			
T/G circ. pump	0.5	0			

FIGURE 3-4 (Continued)

LOAD DESCRIPTION	NAVY FACTORS		MAR. ENG. FACTORS		SNAME
	Sea	Emerg	Sea	Emerg	Sea
T/G cond. Pump	0.5	0			
T/G start L.O. pump	0	0.9		0.9	
Sea valves	0	0			
Emer. gen. S.W. booster	0	0.9			
S.W. boost pump	0.3	0			
Air preheater					0.9
S.W. service pump	0.1	0	0.6		0.8
Bilge and fuel stripping pump	0.1	0	0.1		
Bilge pump	0.1	0	0.1		0.1
Flushing pump	0.1	0			0.4
Fire pump	0.2	0.4	0		0
Bilge & ballast priming pump		0	0.1		
Fire and bilge pump					0
Fire and general service pump			0		
Bilge and ballast pump					0.2
Ballast pump					0.2
Fog/Foam sys. Pump	0		0		
Forced draft blower			0.5		
H.W. circ. Pump	0.6	0	0.1		0.7
H.W. heater	0.5	0.1			0.5
Cargo stripping pump	0	0			
Liquid Cargo transfer pump	0	0	0		0
Cargo brine circ. pump			0.7		
Cargo air coolers			0.9		
Cargo dehumidifier					0.5
Window defrosters and wipers	0	0			
Generator space heaters	0	0		1.0	
Anchor windlass	0	0			
Capstan	0	0			
Personnel elevators	0.2	0			
Cranes	0	0			
Cargo elevators	0	0			
Shop tools	0.1	0	0.1		0.1
Welder	0.1	0			
Test board	0.1	0	0	0	0.2
Battery charger	0.2	0			0.2
I.C. battery charger				1.0	
Ventilation	0.9	0.4	0.9		0.85
Duct & space heaters	0.4	0			0.4
Deck mach. Heaters					1.0
I.C. system	0.4	0.4		1.0	0.4
Radar	0.5	0.5		1.0	
Gyro				0.5	0.4

FIGURE 3-4 (Continued)

LOAD DESCRIPTION	NAVY FACTORS		MAR. ENG. FACTORS		SNAME
	Sea	Emerg	Sea	Emerg	Sea
Radio	0.4	0.4			
Searchlights	0	0			
Mach. space ltg.	0.9	0.9			0.9
General ltg.	0.6	0.4	0.4		0.6
Emergency ltg.	0.6	0.4		0.9	
Navigation ltg.	0.6	0.2		0.4	0.5
Service area ltg			0.4		0.35
SS. reefer circ. pump					0.4
SS. reefer compressor	0.3	0	0.1		0.4
Cargo reefer cmp.	0.3	0	0.6		
A.C. compressor	0.7	0.4	0.8		0.75
A.C. chill wtr. pump	0.7	0.4	0.9		0.75
A.C. S.W. circ. pump	0.7	0.4			0.75
A.C. fan					0.75
A.C. H.W. circ. pump			0.6		0.75
Unit coolers	0.2	0			
Oven/range	0.4	0			
Galley equip.	0.3	0			0.3
Refrig/freezer	0.5	0			
Refrig. small	0.3				0.3
Pantry equip.	0.2	0			0.3
Laundry equip.	0.2	0			0.2
Hospital equip.	0.1	0.1			0.2
Electronics	0.5	0.2	0.5		0.45
Distiller plant	0.7	0			
Distiller brine ovbd.			0.8		0.75
Distiller cond. pump			0.3		0.6
Distiller feed pump			0.8		0.75
F.W. transfer pump			0		
Ice water circ. pump			1.0		0.7
Potable water pump	0.3		0.2		
Drinking fountain	0.4				
H.P. air compressor	0.1				
S.S. air compressor	0.1		0.1		0.3
Control air compressor	0.6		0.2		0.4
Sewage pump	0.1		1.0		0.2
Sewage macerator	0.1		1.0		
Sewage blower			1.0		
Cathodic protection			0.7		
Ice water circ. pump			1.0		0.7
Brine circ. pump			1.0		
Reefer container recept.			0.9		
Winches					
Bow thruster					
Main control console			0.6		
Boiler console			0.6		
R.A.I., E.O.T., alarms			1.0		

3.B.2.b(3)(d)

iii. Reference (ii) provides formulas for the determination of load factors for major steam propulsion vessels.

iv. Load factors for individual loads, in general:

$$\text{Load factor} = \frac{\text{Operating bhp}}{\text{Rated bhp}} \times \frac{\text{No. hours operation}}{\text{24 hours}}$$

or

$$\text{Load factor} = \frac{\text{Operating KW}}{\text{Rated KW}} \times \frac{\text{No. hours operation}}{\text{24 hours}}$$

Often, operating load information is not provided and load factors become $\frac{\text{No. hours operation}}{\text{24 hours}}$

v. A single load factor for group loads may be assigned if they meet one of the following criteria.

a. Two or more loads operate with a definite relationship to each other (e.g., heating and air conditioning);

b. When the relationship described in (a) above is not clear, but is known to exist (e.g., galley equipment);

c. When low power loads in the same space can be assigned roughly the same load factors (e.g., radios and electronics).

vi. Known load use data should always be used in lieu of demand factors, if available.

vii. Power conversions and their efficiency should be considered (e.g. power factors, transformers, semiconductor controlled rectifiers (SCR's). Due to efficiency below 1.0, apparent connected loads may be increased due to the conversion equipment).

viii. Loads that are provided individual factors in the analysis should not be additionally assigned a group factor, and vice versa (e.g., 0.3 (individual factor) x 0.4 (group factor) =0.12 (final factor) (either 0.3 or 0.4 could be used, but not 0.12)).

ix. Factors of zero (0) are assigned to equipment that is seldom used.

x. Factors of 0.9 and 1.0 are used where motors operate at full load for an extended period of time.

xi. Standby units, or duplicate units, should be listed and assigned a factor of zero unless it is continuously idling. The primary unit should be assigned an

3.B.2.b(3)(d)

xi. (cont'd) appropriate factor, e.g., Steering pump No. 1, d.f. 0.9; Steering pump No. 2, d.f. = 0.0 (Stby).

xii. The development of standard load factors for given classes of vessels is encouraged, as time and experience permit.

xiii. Large equipment-unusually large loads, as compared to the generating capacity-should be assigned appropriate factors assuming that other non-essential loads are not operated simultaneously.

xiv. As a final check on the adequacy of a load analysis, check to see that the generating plant is adequate to simultaneously carry the loads vital to the survival of the vessel in an emergency such as fire or flooding. These loads should include:

a. Steering;

b. Vital propulsion auxiliaries;

c. Ventilation;

d. Communications;

e. Fire pumps;

f. Alarms;

g. Bilge pumps;

h. Emergency lighting;

i. Radar; and

j. Controls.

xv. For unmanned machinery spaces, remotely operated emergency loads, such as bridge started fire pump, should be assigned a load factor of 1.0.

xvi. Automatically started equipment should be provided a load factor of 1.0 without regard for spinning reserve.

xvii. Special functional operations of the vessel, such as underway replenishment (a Military Sealift Command (MSC) ship), dredging (a hopper dredge), and at-rig offloading (an offshore supply vessel) do not require one generator in reserve. Normal at sea operations such as cargo cooling (refrig. ship) and liquid cargo recirculation (offshore supply vessels) do require one generator in reserve.

3.B.2.b (4) Power And Lighting Transformers.

(a) References.

i. 46 CFR 111.20 Transformers

ii. 46 CFR 111.20-15 Transformer Feeder Circuits

iii. 46 CFR 111.05 Grounding

iv. NVIC 2-79 "Aluminum Bus Bars"

(b) General Considerations.

i. Transformers should be suitably constructed for the intended use, considering materials and insulation. Aluminum-wound transformers should be factory constructed and fully encapsulated, and all connections should be made in accordance with NVIC 2-79.

ii. Overcurrent and short circuit protection must be provided for primary and secondary windings and feeder cables in accordance with the National Electrical Code (NEC) Article 450. The turns ratio should be considered in calculating full load currents.

iii. Secondary circuits should be provided with a ground detection circuit (see 46 CFR 111.05-21).

iv. Secondary circuit neutral conductors should be grounded.

v. Auto transformers are not to be used for power and lighting circuits.

(c) Power And Lighting transformer Check-off List.

i. Suitable construction.

ii. Secondary provided ground detection.

iii. Secondary neutral grounded (as applicable).

iv. Overcurrent protection provided and limits currents as per NEC Article 450.

v. Connections to aluminum wound transformers made in accordance with NVIC 2-79 if factory-installed terminations are not suitable for connecting to copper conductors.

(5) Semiconductor Controlled Rectifiers (SCR).

(a) References.

i. 46 CFR 111.33.

3.B.2.b(5)(a) ii. ABS Rules For Building And Classing Steel Vessels, Part IV Ch 8.

(b) SCR System Check-Off List.

i. Meets the requirements of 46 CFR 111.33, and for a switchboard and/or electric propulsion installation, 46 CFR 111.30.

ii. Name plate data.

iii. Heat removal system.

iv. Cooling.

v. Immersed type with non-flammable liquid and no leakage with vessel inclined.

vi. Located away from heat sources.

vii. Temperature rating and operating range.

viii. Unrestricted air circulation if naturally cooled.

ix. Inlet air temperature within design limits.

x. Loss of cooling shutdown.

xi. Inlet cooling water temperature.

xii. Watertight or dripproof rectifier stack.

xiii. Vent exhaust does not terminate in a hazardous area.

xiv. Vent exhaust does not impinge on electrical equipment in enclosure.

xv. High temperature alarm or shutdown.

xvi. SCR propulsion systems:

a. Meet ABS Sections 4-8-5/5.17.9 and 4-8-5/5.17.10.

b. Current and current rate limiting circuit.

c. Overcurrent protection.

d. High temperature alarm set below shutdown temperature.

e. Internal overcurrent device coordination.

f. Blown fuse detection system.

g. In dry place.

3.B.2.b(5)(b) xvii. SCR motor control:

a. Overspeed trip; loss of field (shunt).

b. Shunt motor field excitation interlock.

(6) Electrical Installations In Hazardous Locations.

(a) Tables and Diagrams.

i. NEC Table 500-8(b) – Temperature Markings (Figure 3-5).

ii. Tankship and Tank Barge Weather Deck Criteria (Figure 3-6).

iii. Specified Hazardous Locations (Figure 3-7).

iv. Summary of Minimum Requirements for Carriage of Bulk Dangerous Cargoes on Unmanned Tank Barges (Figure 3-8).

v. Recommended Plan Review Checkoff for Hazardous Locations (Figure 3-9).

FIGURE 3-5

TEMPERATURE MARKINGS
NEC ART. 500 – TABLE 500-8(b)

MAX. TEMP. °C	°F	MARKING
450	842	T 1
300	572	T 2
280	536	T 2 A
260	500	T 2 B
230	446	T 2 C
215	419	T 2 D
200	392	T 3
180	356	T 3 A
165	329	T 3 B
160	320	T 3 C
135	275	T 4
120	248	T 4 A
100	212	T 5 *
85	185	T 6 *

Marking shall not exceed auto ignition temp. of the atmosphere encountered.

* Non-heat producing equipment, and that with a temp. of 100°C or less, need not be marked.

FIGURE 3-6

TANKSHIP WEATHERDECK CRITERIA

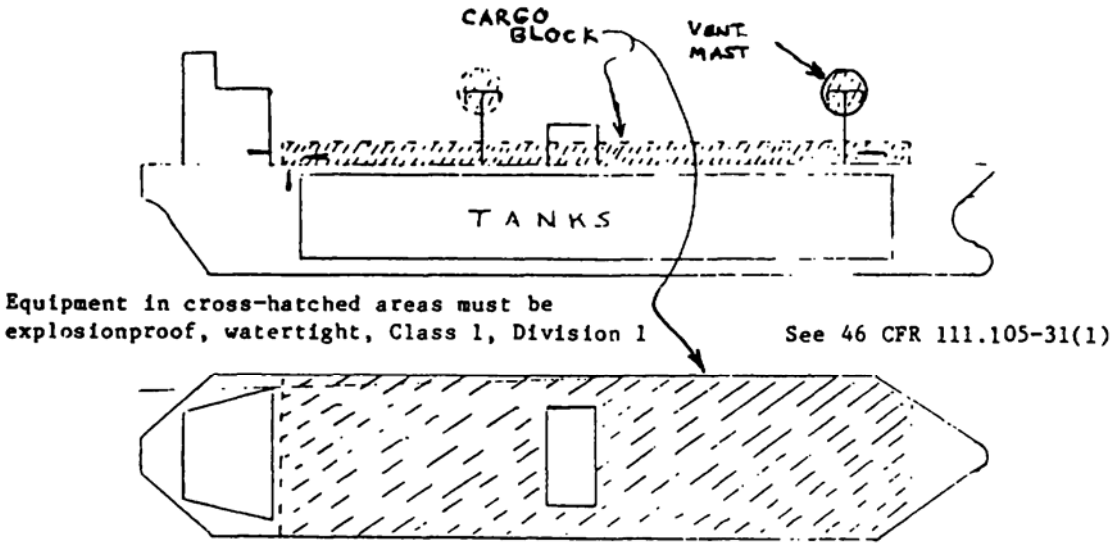

TANK BARGE WEATHERDECK CRITERIA

Grades A-D: See 46 CFR 111.105-31(1)

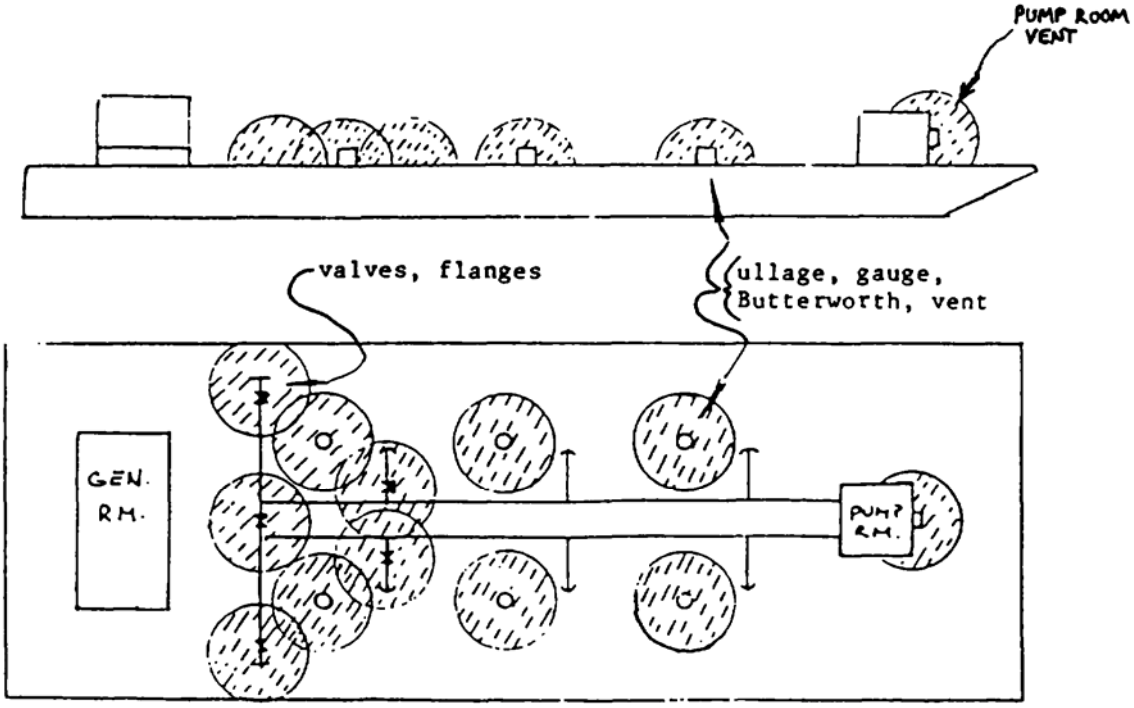

10-foot rule: Equipment in cross-hatched areas must be explosion proof, watertight Class 1, Division 1

FIGURE 3-7

SPECIFIED HAZARDOUS LOCATIONS

LOCATION	CLASS I DIV. 1	CLASS I DIV. 2	CLASS II	CLASS III
CARGO TANKS *	NA	NA	NA	NA
CARGO HANDLING ROOMS*	NA	NA	NA	NA
COFFERDAMS*	NA	NA	NA	NA
BATTERY ROOMS	X	NA	NA	NA
PAINT STORAGE ROOMS	X	NA	NA	NA
PAINT MIXING ROOMS	X	NA	NA	NA
OIL STORAGE ROOMS	X	NA	NA	NA
ANESTHETIC HANDLING AREA	X	NA	NA	NA
TANK VESSEL WEATHERDECK 10 FT. RULE	X	NA	NA	NA
TANK VESSEL WEATHERDECK CARGO BLOCK	X	NA	NA	NA
FLAMMABLE GAS HANDLING ROOM*	NA	NA	NA	NA
FLAMMABLE LIQUID HANDLING ROOM*	NA	NA	NA	NA
ADJACENT TO CLASS I DIV. 1 W/COMMUNICATION	X	NA	NA	NA
TANK VESSEL ENCLOSED SPACES ADJACENT TO CARGO TANK*	NA	NA	NA	NA
GRAIN HANDLING AREA	NA	NA	X	NA
COAL HANDLING AREA	NA	NA	X	NA
COAL PULVERIZING AREA	NA	NA	X	NA
CARPENTER SHOP	NA	NA	NA	X
FIBER HANDLING AREA	NA	NA	NA	X
VENT DUCT		SAME AS SPACE SERVED		
TANK VESSEL CARGO HOSE STOWAGE SPACE*	NA	NA	NA	NA
SPACE CONTAINING CARGO PIPING ONLY, ON TANK VESSELS*	NA	NA	NA	NA
LFG BARRIER SPACE*	NA	NA	NA	NA
ENCLOSED SPACE OPENING TO WEATHER DECK HAZ. AREA	X	NA	NA	NA
TANK VESSELS WITHIN 8' OF CARGO CONTAINMENT SYSTEM	X	NA	NA	NA
TANK VESSELS, WITHIN 10' OF CARGO HANDLING ROOM DOOR OR VENT	X	NA	NA	NA
VESSEL FUEL OIL TANKS, 10' RULE DOES NOT APPLY	X	NA	NA	NA

* These areas are considered more hazardous than Class I, Division 1 and therefore carry specific requirements in 46 CFR 111.105-29, 111.105-31, and 111.105-32.

FIGURE 3-8

SUMMARY OF MINIMUM REQUIREMENTS FOR CARRIAGE OF CERTAIN BULK DANGEROUS CARGOES ON UNMANNED TANK BARGES (Extracted From 46 CFR, Table 151.05)

Cargo identification						Tank				Cargo transfer		Environmental control		Special Requirements (section)	Fire hazard	Fire extinguisher	Tank insp. period	Notes
Name	Density (lb/gal)	Press.	Temp.	Hull type	Cargo segregation	Type	Vent	Gaging	Fire check	Control	Tanks	Pumpout	Fire and eng.					
VESSEL CHARACTERISTICS																		
The plans for this vessel have been reviewed and indicate that the subject vessel has the following characteristics as defined in Table 151.05.																		
	Not to exceed	Pr At	Elv Amb Low	1 2 3	2 22 21 12 11	IndPr IndGr IntPr IntGr	SR PV Op	Cl Re Op	1 2	G1 G2 P1 P2	In Pd NR	VF VN NR			I IB IC ID **			

{CROSS OUT ALL BUT THE APPLICABLE REQUIREMENTS}

Code: Cargo segregation: 1st number (separation of cargo from water). 1 = single skin, 2 = double skin. 2nd number (separation of cargo from crew space), 1 = single bulkhead, 2 = cofferdam.

* = See Table 151.05

Notes: ** Plans for the subject vessel indicate that no electrical equipment is installed (in hazardous areas (10 feet from any tank opening).

Vessel Identification: _____

Date: _____ Sheet _____ of _____

FIGURE 3-9

RECOMMENDED PLAN REVIEW CHECK-OFF FOR HAZARDOUS LOCATIONS

1. Has sufficient information been provided?

_____(a) Hazardous cargoes;

_____(b) An arrangement plan identifying hazardous and non-hazardous areas, cargo system or hazards, electrical equipment type and locations;

_____(c) A complete and detailed Bill of Materials;

_____(d) Elementary and one—line wiring diagrams, showing all wiring;

_____(e) Electrical installation details;

_____(f) UL listings, UL service guide letters, Factory Mutual (FM) test reports, Canadian Standards Association (CSA), or other independent test laboratory listings for IS and explosionproof (EP) systems/equipment; and

_____(g) Maximum temperature of electrical in hazardous areas.

2. Identify hazardous characteristics:

_____(a) Class and group;

_____(b) Flashpoint and grade;

_____(c) Minimum ignition temperatures; and

_____(d) Special requirements, including material compatibility.

3. Confirm boundaries of hazardous locations and suitability of equipment installed.

4. Confirm that the installation meets:

_____(a) Subchapter J;

_____(b) Intended application by UL, FM, CSA, or other independent test laboratories;

_____(c) Specific requirements for the cargo/material; and

_____(d) General considerations of this guide.

3.B.2.b(6) (b) References.

i. NVIC 9-84 (Electrical Installations in Agricultural Dust Locations).

ii. 46 CFR 111.60 (Wiring Materials and Methods).

iii. 46 CFR 111.105 (Hazardous Locations).

iv. 46 CFR 32.45 (Electrical Installation, Tank Vessels).

v. 46 CFR 38.15-15 (Electrical Installation, Liquefied Flammable Gas (LFG) Tank Vessels).

vi. 46 CFR Table 151.05 (Summary of Minimum Requirements, Bulk Dangerous Cargoes).

vii. NFPA 70, National Electrical Code (NEC) Art. 500-503.

viii. National Fire Protection Association (NFPA) 496, "Purged and Pressurized Enclosures for Equipment."

ix. Chemical Data Guide for Bulk Shipment by Water, COMDTINST M16616.6 (series).

x. NFPA 493, "Intrinsically Safe Process Control Equipment.

xi. Instrument Society of America (ISA) Recommended Practice 12.6 - Installation of intrinsically Safe Instrument Systems.

xii. 46 CFR 111.15-5.

xiii. NFPA 77, "Static Electricity."

xiv. Electrical Instruments in Hazardous Locations, Magison.

xv. Chemical Hazard Response Information System (CHRIS), COMDTINST M16465.11 (series).

(c) General Requirements.

i. 46 CFR 111.105 contains the requirements for electrical equipment and wiring in locations where fire or explosion hazards may exist. Electrical installations in these locations require a form of construction and installation that will ensure safe performance under conditions of proper use and maintenance. In these locations, it is necessary to exercise more than ordinary care with regard to the installation and maintenance of equipment and wiring. The primary objective in design is to minimize the amount of electrical equipment installed in hazardous locations.

ii. Through the exercise of ingenuity in the layout of

3.B.2.b(6)(c) ii. (cont'd) electrical installations for hazardous locations, it is frequently possible to locate much of the equipment in less hazardous or in non-hazardous locations and thus reduce the amount of special equipment and installations required. [NOTE: This guidance addresses the requirements for tank vessels, specified hazardous cargoes, and specified hazardous areas. A discussion of this topic, basic requirements for plan review, and an list of references have been provided.]

(d) Classifications.

i. Introduction. Locations are classified depending on the properties of the flammable vapors, liquids, gases, or combustible dusts or fibers that may be present and the likelihood that a flammable or combustible concentration or quantity is present. Hazardous locations are classified by class, group, and division. The explosion characteristics of air mixtures of hazardous gases, vapors, or dusts vary with the specific material involved. Class I locations involve flammable gases or vapors. Class II locations involve combustible dusts, and Class III locations involve easily ignitable fibers or flyings.

ii. Classifying Air Mixtures. For purposes of testing and approval, various air mixtures have been grouped on the basis of three hazardous characteristics. For Class I locations, Groups A, B, C, and D, the classification involves determination of maximum explosion pressure, maximum safe clearance between parts of a clamped joint in an enclosure, and the minimum ignition temperature of the atmospheric mixture. For Class II locations, Groups E and G, the classification involves the tightness of the joints of assembly and shaft openings for preventing entrance of dust in the dust/ignitionproof enclosure, the blanketing effect of layers of dust on the equipment that may cause overheating, electrical conductivity of the dust and the ignition temperature of the dust. It is necessary that equipment be approved not only for the class, but also for the specific group of the gas, vapor, or dust that will be present. Specific vapors may be identified by reference to the NEC, CHRIS, and the Chemical Data Guide.

iii. Classifying Hazardous Locations. Hazardous locations are further classified according to the probability that a hazardous situation exists. Division 1 locations have a higher probability than Division 2 locations. Certain locations, such as cargo handling rooms, are considered to have a still higher probability of a hazardous situation than a Division 1 location. Additional restrictions have been placed on electrical installations in those areas.

3.B.2.b(6)(d) iv. Classifying Hazardous Liquids. Flammable and combustible liquid cargoes may be further classified according to their vapor pressure and flashpoint (fp). It should be noted that these liquids may be assigned a Class, a Group, and a Grade. In cases when requirements differ, the most conservative requirements should be applied. Each compartment or area should be considered individually in determining its classification. If several different hazardous atmospheres may be present, the most hazardous is to be considered to exist. Hazardous locations and/or permissible equipment for the particular location are described in Title 46, CFR as noted below:

a.	Combustible liquid cargo carriers (fp of 60°C or higher)	111.105-29
b.	Flammable or combustible cargo With a fp below 60°C, liquid and inorganic acid carriers	111.105-31 Sulfur
c.	Bulk liquefied gas and ammonia carriers	111.105-32
d.	Mobile offshore drilling units (MODU's)	111.105-33
e.	Vessels carrying coal	111.105-35
f.	Flammable anesthetics	111.105-37
g.	Gasoline or other highly volatile motor fuel carried in vehicles	111.105-39
h.	Battery rooms	111.105-41
i.	Paint stowage or mixing spaces	111.105-43

(e) Equipment. Specific requirements for electrical equipment in hazardous locations are contained in 46 CFR 111.105. In that subpart, certain equipment is required to be listed by Underwriters Laboratory, Inc. (UL), Factory Mutual research Corporation (FM), Canadian Standards Association (CSA), or another independent laboratory recognized by the Commandant.

(f) General Considerations. The following guidance clarifies the referenced regulations and codes:

i. 46 CFR 38.15-15 And 111.105-32. Requirements for Liquefied Flammable Gas (LFG) installations.

ii. 46 CFR 111.60-5(b). Cable must not be located in any tanks except to supply equipment or instruments specifically designed for and compatible with such location, and whose function require its installation in

3.B.2.b(6)(f)

ii. (cont'd) the tank. The cable must be compatible with the liquid or gas in the tank or be protected by an enclosure.

iii. 46 CFR 111.105-7.

a. Purged and pressurized systems in accordance with NFPA 496 may also be used where explosionproof installations are required.

b. A list of recognized testing laboratories for both explosionproof and IS approvals is posted at http://www.uscg.mil/hq/g-m/mse/lablist.html.

iv. 46 CFR 111.105-11. Intrinsically Safe systems may be used anywhere explosionproof equipment may be used, but the converse is not necessarily true.

v. 46 CFR 111.105-27. Belt drives are acceptable if belt is conductive and grounding is in accordance with NFPA 77.

vi. 46 CFR 111.105-31. See specified Hazardous Locations Table for specific areas.

vii. 46 CFR 111.105-31(b). Note cable locations.

viii. 46 CFR 111.105-31(l).

a. Ten foot rule also applies to tank barges. All equipment within area is to meet Class I, Division 1 requirements. See Figure 3-6.

b. Cargo block rule, ten foot rule, and eight foot rule for exposed cargo containment systems apply. All equipment in these areas shall be Class I, Division 1. See Figure 3-6.

ix. NEC 500-1. Minimize electrical equipment in hazardous areas.

x. NEC 500-2 And 46 CFR Table 151.05. See table for most recent class and group designations.

xi. NEC 501-3(b)(1). Division 2 switching mechanisms must either be in an explosionproof enclosure, or contacts are to be in oil immersion or hermetically sealed chamber with a non-explosionproof enclosure with vent and flame screen. Maximum temperature 80% minimum ignition temperature. General purpose enclosures are allowed for meters, instruments, etc., where the available energy is not sufficient for ignition. Requires specific approval.

xii. NEC 502. Primary factors to be eliminated with dusts are the admission of dust into the enclosure, heat of ignition due to dust buildup and insulating

3.B.2.b(6)(f)

xii. (cont'd) characteristics, and conductive dust-forming current paths.

xiii. Temperature Rating. The temperature rating of all equipment shall not exceed the minimum ignition temperature of the hazardous material. In the past, this temperature was believed to be correlated to the other factors tested in determining groups. In 1971, tests showed there is no predictable correlation, and minimum ignition temperature should be treated individually, in addition to Class and Group. Minimum ignition temperatures can be found in the Chemical Data Guide.

xiv. Division 1 Equipment. Division 1 equipment is satisfactory for Division 2 applications of the same Class and Group.

xv. Electric Oil Immersion Heaters. See 46 CFR 111.85.

xvi. Vent Ducts. Vent ducts shall be the same classification as the space they serve. Vent fans shall be non-sparking. Vent fan motors shall be approved for the locations, or located outside the duct, 10 feet from duct termination, in a non-hazardous area.

(g) Intrinsically Safe (IS) Systems. The following guidance clarifies the applicable regulations:

i. IS systems limit the energy available to the hazardous location by limiting the voltage and current available under normal and fault conditions.

ii. IS systems may be used in any hazardous location but must be approved for the application.

iii. IS systems must be UL, FM, CSA, or other independent test laboratory, recognized by Commandant (G-MSE-3), tested and approved for the intended application, and each component shall be labeled to identify the component, the testing laboratory, and its intended application.

iv. IS systems can only be accepted as whole units by the MSC. Field inspection offices check that the system is applied as intended and that the installation meets the applicable Coast Guard installation requirements. Switching and other devices that do not store energy can be approved when properly applied with approved IS barriers.

v. All cables for use in IS installations must meet the standards of 46 CFR 111.105-11.

vi. Installation requirements:

3.B.2.b(6)(g)vi

a. IS equipment in weather locations must be made watertight.

b. Cable insulation must be appropriate for the hazardous atmosphere (non-reactive).

c. As a general rule, conductors should be no smaller than #18.

d. IS conductors must be isolated from others to prevent compromise due to induction or insulation breakdown.

e. At a termination, IS circuits must be isolated from other IS circuits, other low-energy level circuits, and all power circuits.

f. All IS circuits and cables are to be provided positive mechanical isolation from all power circuits.

g. More than one IS circuit of the same system may be run in single multiconductor cable (see ISA RP 12.6, Section 6.7).

h. IS cables shall carry only IS conductors.

i. Each IS cable must be shielded, 2 inches from non-IS cables, or be partitioned by a grounded metal barrier from other non-IS cables.

(h) Explosionproof (EP) Equipment. The following guidance clarifies the applicable regulations:

i. EP equipment shall be specifically tested and approved for Class I applications by UL, FM, CSA, or other independent test laboratories, and labeled as such.

ii. All components of an "EP" installation must be EP and specified as such by the laboratory. These include enclosure, seal fitting, plugs, drains, seal compound, fiber dam or plug, seal housing, etc.

iii. Factory-sealed EP equipment must have a seal fitting within 18 inches of the enclosure for each cable.

iv. If two EP enclosures are less than 36 inches apart and connected, only one seal is necessary in the conduit between them.

v. EP equipment in weather locations shall be made watertight or waterproof. EP equipment is not usually watertight. Care should be taken in making them watertight that any gasket, etc., does not interfere with the flame-quenching surfaces and that gaskets are external to these surfaces (see Electrical Instruments in Hazardous Locations).

3.B.2.b(6)(h)

vi. EP equipment is not vaportight. Conversely, vaportight equipment is not EP, due to pressure and temperature changes.

vii. See NEC 500 and Figure 3-5 for temperature ratings.

viii. Mineral Insulated (MI) cables require special EP terminal fittings, approved for the application.

ix. Special care should be taken with regard to requirements for EP enclosures as opposed to EP assemblies.

x. Alterations to EP equipment may void its explosionproof capabilities. EP enclosures are approved for certain applications, such as the installation of terminal strips, relays, etc., and may be internally modified to meet these intended applications within the limits specified in the approval. EP assemblies may not be modified in any way. The following items are of concern in modifications:

a. Major alteration to internal volumes and pressure paths, affecting pressure dissipation due to pressure piling;

b. Alteration of flame-quenching paths and surfaces;

c. Alteration of enclosure structural strength and integrity.

These alterations may differ from the configuration as tested by UL, FM, CSA, or other approved laboratories, and should be specifically reviewed.

(i) Purged And Pressurized (P & P) Systems.

i. P & P systems pressurize the atmosphere within an enclosure with a non-hazardous gas, thereby preventing the hazardous atmosphere from coming in contact with electrical equipment within the enclosure.

ii. P & P systems may be used in lieu of EP equipment for all applications except cargo handling rooms, and the system must meet the requirements of NFPA No. 496.

iii. P & P systems need not be approved by a testing laboratory. The MSC may review and approve systems for specific applications.

iv. P & P installations must meet 46 CFR 111.60 requirements.

v. Special care should be taken to ensure that the protective gas is from a non-hazardous source and cannot be contaminated by a hazardous source.

3.B.2.b(6)(i)

vi. Exhaust fans may require interlocking with the supply fans to prevent operation with the supply fans off.

vii. Vent fan operation should be monitored by airflow, not motor operation.

viii. P & P test and maintenance procedures should be provided.

(7) AC Motor Circuits.

(a) Tables.

i. 3-Phase, 208 VAC Branch Circuit Quick Reference Table (Figure 3-10).

ii. 3-Phase, 460 VAC Branch Circuit Quick Reference Table (Figure 3-11).

(b) Code Letters And Branch Circuit Protection.

i. General. The nameplate on a motor rated at 0.5 horsepower or larger must list its code letter (see 46 CFR 111.25-5 and NEC 430-7; this information is very seldom available to the plan reviewer). Code letters are listed alphabetically and represent the locked rotor kilo volt amperes (KVA) per horsepower. The branch circuit protective device chosen must be large enough to allow sufficient time for the motor to start. Higher code letters indicate greater locked rotor currents, requiring larger protective devices. When starting a motor with full voltage, the locked-rotor current does not diminish until the motor is very nearly up to its rated speed. Most motors used have code letters ranging from "F" to "V." For these motors, the maximum rating or setting of the branch circuit protective device, if a fuse, is 300 percent of the motor full-load current; if a circuit breaker, this value must not exceed 250 percent (see 46 CFR 111.70-1 and NEC Table 430-152). The minimum value is not given but must be capable of carrying the starting current of the motor (see subparagraph 3.C.2.g.(3) and NEC 430-52). For vital systems, however, a minimum of 200 percent full-load current is recommended for motors having "F" to "V" code letters, to ensure starting of the motors. The safety of the vessel far outweighs the motor circuit protection in any emergency situation. Use the trip setting values listed in the Quick Reference tables (Figure 3-10 or 3-11), Columns I or J as applicable, to check all motors having code letters "F" through "V."

ii. Motor Running Protection. Running protection for most motor applications is provided by circuit overload elements that take longer to operate but may be set closer to the recommended overload value of 115 percent of the motor's full-load current. The size of the device chosen must be determined from the actual nameplate

3.B.2.b(7)(b) ii. (cont'd) full-load current rating. This information is not available to the plan reviewer and sometimes even the design engineer. The marine inspector should compare the overloads used against the actual nameplate data to ensure that they do not exceed the 115 percent recommended value. Use the values listed in Columns "C" and "D" of Quick-Reference Tables (Figure 3-10 or 3-11), to check the maximum value to be specified for running protection. For additional methods, refer to NEC 430-C.

iii. Motor Controllers Or "Starters".

a. These devices are used to manually or automatically start electric motors from a local or remote location. Motor controllers basically consist of a relay or "contactor," which is used to connect the motor to the AC line by a pushbutton switch, liquid level switch, pressure switch, temperature switch, etc. The two types of controllers used are "low voltage release" (LVR) and "low voltage protection" (LVP). Both types can be identical controllers, but their electrical circuits will vary.

b. LVR controllers are required for vital systems to ensure that the equipment will re-start following a loss of power or reduction in voltage below the "drop-out" value of the operating coil. These starters are usually energized by contacts that must remain closed for the contactor to stay energized.

c. LVP controllers are activated by "momentary" contacts, such as a pushbutton. When the button is depressed, the starter is energized as above, but an additional "auxiliary" normally open contact furnished as part of the controller closes when the "starter" main contacts close. This contact is wired in parallel with the pushbutton and takes its place when the button is released, thus keeping the controller energized or "sealed-in." Should a momentary loss of power and accompanying drop in voltage occur, the starter coil will release all its main and auxiliary contacts and will not re-start following a power outage until the momentary pushbutton contact is again depressed.

d. The above discussion has been limited to the most commonly used method of starting electric motors on marine vessels; that is, by using the same AC source that powers the motor to energize its controller. In certain special applications, AC motor starters could be energized with DC or separate AC sources. Motor controllers are furnished with the thermal overload elements mentioned above. These elements are used to open

3.B.2.b(7)(b)iii

d. (cont'd) (or close) contacts which are used either in the control circuit or to provide an overload alarm to another circuit. Some of these elements are adjustable; most often the non-adjustable type is specified. Most motors are stopped by contacts when an overload occurs to vital systems, such as steering, these devices are used only to signal the overload condition in a separate circuit.

iv. Disconnecting Means. Motor controllers are required with a disconnecting device mounted within the same enclosure. The disconnecting means must disconnect both the motor and controller from all supply conductors (see NEC 430 part IX).

v. Reference Tables.

FIGURE 3-10

3-PHASE, 208 VAC MOTOR CIRCUIT QUICK-REFERENCE TABLE
FOR SINGLE BANKED CABLES

A	B	C	D	E	F	G	H	I	J
HP	FLA	Running Prot. 115% FLA.		Starter Size	Discon-nect Size	Max. Full	Prot. Device Volt Start		
		Adj.	Non-Adj.			Code C.B. 200%	B-E Fuse 250%	Code C.B. 250%	F-V Fuse 300%
.25	1.23	1.41	2	00	30	15	15	15	15
.33	1.48	1.7	2	00	30	15	15	15	15
.5	2.0	2.3	3	00	30	15	15	15	15
.75	2.8	3.22	4	00	30	15	15	15	15
1	3.6	4.14	4	00	30	15	15	15	15
1.5	5.7	6.56	8	00	30	15	15	15	15
2	7.8	8.97	10	0	30	20	20	20	20
3	10	11.5	12	0	30	20	30	30	30
5	17	19.6	20	1	60	35	40	50	60
7.5	24	27.6	30	1	60/100	50	50	70	80
10	31	35.7	40	2	100	70	70	90	100
15	46	52.9	60	3	100/200	100	100	125	150
20	59	67.9	70	3	200	125	125	150	200
25	75	86.3	100	3	200/400	175	175	200	250
30	88	101	110	3	200/400	200	200	125	300
40	114	131	150	4	400	250	250	300	350
50	143	164	200	4	400/600	300	300	400	450
60	170	196	225	5	400/600	350	350	500	500
75	212	243	250	5	600	500	500	600	—
100	273	314	350	5	600	600	600	—	—
125	343	394	450	6	—	—	—	—	—
150	396	455	500	6	—	—	—	—	—
200	528	607	800	6	—	—	—	—	—

FIGURE 3-10 (cont'd)

3-PHASE, 208 VAC MOTOR BRANCH CIRCUIT QUICK-REFERENCE TABLE

HP	K	L	M	N	O	P
	125% FLA	THREE CONDUCTOR BRANCH CABLE				
		AWG (IEEE 45, 50°C)			TSGA - ( )	
		T	E,X	AVS	40°C	50°C
.25	1.54	14	14	14	4	4
.33	1.85	14	14	14	4	4
.5	2.51	14	14	14	4	4
.75	3.5	14	14	14	4	4
1	4.5	14	14	14	4	4
1.5	7.13	14	14	14	4	4
2	9.75	14	14	14	4	4
3	12.5	14	14	14	4	4
5	21.3	12	14	14	9	9
7.5	30.0	10	10	12	9	9
10	38.8	7	8	10	9	14
15	57.5	5	6	7	23	23
20	73.8	3	4	5	30	30
25	93.8	1	2	3	40	50
30	110.0	1/0	1	2	50	60
40	142.5	3/0	2/0	1/0	75	100
50	178.8	4/0	3/0	2/0	125	125
60	212.5	300	250	4/0	150	150
75	265.0	400	350	250	200	250
100	341.3	600	500	400	300	400
125	428.8	—	—	—	400	—
150	495.0	—	—	—	—	—
200	660.0	—	—	—	—	—

FIGURE 3-11

3-PHASE, 460 VAC MOTOR BRANCH CIRCUIT QUICK-REFERENCE TABLE

A	B	C	D	E	F	G	H	I	J
HP	FLA	Running Prot. 115% FLA		Starter Size	Discon-nect Size	Max. Full	Prot. Device Volt Start		
		Adj.	Non-Adj.			Code C.B. 200%	B-E Fuse 200%	Code C.B. 250%	F-V Fuse 300%
.5	1	1.15	2	00	30	15	15	15	15
.75	1.4	1.61	2	00	30	15	15	15	15
1	1.8	2.07	3	00	30	15	15	15	15
1.5	2.6	2.99	3	00	30	15	15	15	15
2	3.4	3.91	4	00	30	15	15	15	15
3	4.8	5.52	6	0	30	15	15	15	15
5	7.6	8.74	10	0	30	20	20	20	25
7.5	11	12.65	15	1	30/60	25	30	30	35
10	14	16.1	20	1	30/60	30	35	35	45
15	21	24.15	25	2	60/100	45	60	60	70
20	27	31.05	35	2	60/100	60	70	70	90
25	34	39.1	40	2	100/200	70	90	90	110
30	40	46	50	3	100/200	90	100	100	125
40	52	59	60	3	200	125	150	150	175
50	65	74.75	80	3	200	150	175	175	200
60	77	88.55	90	4	200/400	175	200	200	250
75	96	110.4	125	4	400	200	250	250	300
100	124	142.6	150	4	400	250	350	350	400
125	156	179.4	200	5	400/600	350	400	400	500
150	180	207	225	5	600	400	450	450	600
200	240	276	300	5	600	500	600	600	—

FIGURE 3-11 (cont'd)

HP	K	L	M	N	O	P
	125% FLA	THREE CONDUCTOR BRANCH CABLE				
		AWG (IEEE 45, 50°C)			TSGA -( )	
		T	E,X	AVS	40°C	50°C
.5	1.25	14	14	14	4	4
.75	1.75	14	14	14	4	4
1	2.25	14	14	14	4	4
1.5	3.25	14	14	14	4	4
2	4.25	14	14	14	4	4
3	6	14	14	14	4	4
5	9.5	14	14	14	4	4
7.5	13.75	14	14	14	4	4
10	17.5	14	14	14	4	9
15	26.25	10	10	12	9	9
20	33.75	8	10	10	9	9
25	42.5	7	8	8	14	14
30	50	6	7	7	14	23
40	65	4	5	6	23	23
50	81.25	2	3	4	30	40
60	96.25	1	2	3	40	50
75	120	2/0	1/0	1	60	75
100	155	3/0	2/0	1/0	100	100
125	195	250	4/0	3/0	125	150
150	225	300	250	4/0	150	200
200	300	500	400	300	250	300

(c) Examples of 3-Phase AC Motor Circuits. Use Quick-Reference Columns, Figure 3-10:

i. Example No. 1. Single motor, 25 horsepower, 460V, code letter J, full voltage start, non-vital, non-adjustable overloads, branch circuit protected by circuit breaker, Type T, IEEE 45 Cable, in 50°C ambient temperature space.

From Quick-Reference Columns, Figure 3-11:

D - Standard overload size nearest 115 percent full load; current is 40 amperes.

E - Starter size is 2.

F - If a disconnect is used near the motor, a 100 ampere size is sufficient, provided it is not fused above 100 amperes (if fusible). If part of a combination starter, the complete unit must be rated to handle the 25-horsepower motor.

3.B.2.b(7)(c) i. (cont'd) I - The maximum standard size for the branch circuit protective device is a 90 ampere breaker.

K - The cable used to power the motor must be rated for at least 42.5 amperes. For Type T cable in a 50°C ambient location Type T-7 is required.

ii. Example No. 2. A 460 volt Motor Control Center (MCC) supplying one 30 HP, one 15 HP, and two 5 HP motors in 50°C ambient space. The 5 HP motors are steering systems pumps. All are full-voltage starting; the 30 HP motor starter has adjustable overloads. The unit has branch circuit protection with circuit breakers. Navy-type cable TSGA is used. First get data for each motor load; assume code letters F-V.

From Quick-Reference Columns, Figure 3-11:

Col. A	Col. B	Col. C	Col. E	Col. F	Col. I	Col. K	Col. P
Horse-Power	Full Load Amps	Adj. Over Load Size	Start-er Size	Std. Disc. Size, If Used	Max. Branch Circ. Bkr. (250%)	125% F.L.A.	50°C TSGA-( )
30	40	46	3	100	100	50	23
15	21	24.2	2	60	60	26.3	9
5	7.6	8.7	0	30	N/A	9.5	4

Bus or cable in MCC must be sized for 125 percent of the largest plus 100 percent of the remaining motor full load currents, 50 + 21 + 7.6 = 86.2 amperes. If the MCC has spare sections, allowance shall be made for future growth. Breaker protecting entire MCC must not be larger than 100+21+7.6+7.6 or 136.2 amperes.

A 125 amp circuit breaker would be adequate.

The 5 HP steering pump motors should be protected with circuit breakers having adjustable, instantaneous (magnetic) type tripping only. These breakers must be set to open the motor circuit at 175 to 200 percent of the locked rotor current. From subparagraph 3.C.2.h below, these settings should be 79 to 90 amperes.

(8) Tables, Diagrams, And Formulas.

(a) NEMA Enclosures. ICS 1-110, NEMA STDS.

TYPE	DESCRIPTION	PROTECTION
	General Purpose, Indoor	Personnel and Falling Dirt
2	Drip-proof, Indoor Falling Liquids	Personnel, Dirt, Non-Corrosive
3	Dust- and Raintight, Sleet- and Ice-Resistant, Outdoor	Personnel, Outdoor Windblown Dirt and Water
3R	Rainproof, Sleet and Ice	Personnel, Self-Explanatory

3.B.2.b(8)(a) (cont'd)

3S	Dusttight, Raintight, Sleet- and Ice-Proof, Outdoor	Personnel, Self-Explanatory
4	Watertight and Dusttight, Indoor and Outdoor	Personnel, Falling and Splashing Dirt and Water, Sleet-
4X	Watertight, Dusttight, Corro-sion-Resistant, Indoor and Outdoor	Resistant, Personnel, Self-Explanatory
70	Submersible, Watertight, Dusttight, Sleet- and Ice-Resistant, Indoor and Outdoor	Personnel, Self-Explanatory
7	Class I, Groups A – D Air Break	Hazardous Locations, Indoor
8	Class I, Groups A – D Oil-Immersed	Hazardous Locations, Indoor
9	Class II, Groups E – G Air Break	Hazardous Locations, Indoor
10	Bureau of Mines	
11	Corrosion-Resistant and Drip-proof, Oil-Immersed, Indoor	Corrosive Liquids
12	Industrial Use, Dusttight and Driptight, Indoor Liquids	Dirt and Non-Corrosive Dripping
13	Oiltight and Dusttight, Indoors	Self-Explanatory

(b) Common Abbreviations.

a	amperes
AC	alternating current
Al	aluminum
alt	alteration
amb	ambient
AVC	asbestos-varnished, cambric-insulated cable
AWG	American Wire Gage
bhd	bulkhead-mounted
B/M	bill of material
C	degrees Centigrade
chg	change
Class I, Class II, etc.	(see NEC 500)
cond	conductor
corr	corrosive
CSA	Canadian Standards Association
Cu	copper
Cu in	cubic inches
cy	cycles
DC	direct current
D/G	Diesel generator
dp	double pole
dp	dripproof
dpdt	double pole, double throw
dpst	double pole, single throw
dwg	drawing
EP	explosionproof
F	degrees Fahrenheit
fig	figure

3.B.2.b(8)(b) (cont'd)

FM	Factory Mutual
gnd	ground
Group A, Group B, etc.	(see NEC 500)
haz	hazardous
HP	horsepower
IC	interrupting current
incand	incandescent
incl	inclusive
inst	instantaneous
IS	intrinsically safe
KVA	kilo volt amperes
KW	kilowatt
L.C.L.	light center length
LVP	low voltage protection
LVR	low voltage release
max.	maximum
M.I.	mineral insulated, metal sheathed
min	minimum
mod	model
mtg	mounting
NEC	National Electrical Code
nwt	non-watertight
p	pole
ped	pedestal
pend	pendant
PF	power factor
ph	phase
port	portable
psi	pounds per square inch
pt	point
PYRO	pyrometer
R	rubber-insulated cable
refl	reflector
rev	revision
SCR	semiconductor controlled rectifier
sp	single pole
spdt	single pole, double throw
S.P. Phone	sound-powered phone
SS	ship service
SWBD	switchboard
sym	symbol
T	thermoplastic insulated cable
term	terminal
Temp	temperature
T/G	turbine generator
UL	Underwriters Laboratories, Inc.
uv	under voltage
v	volts
VC	varnished cambric-insulated
w	watts or wire
wt	watertight
w/	with
#	catalog number(s)
&	and
@	at

3.B.2.b(8) (c) NEMA AC General Purpose, Class A Full Voltage Controllers, Single-Speed Squirrel Cage Motors.

3-PHASE NON-JOGGING DUTY

SIZE	CONTINUOUS DUTY AMPS	HORSEPOWER 200 VAC	230 VAC	460 VAC	LIMIT AMPS
00	9	1.5	1.5	2	11
0	18	3	3	5	21
1	27	7.5	7.5	10	32
2	45	10	15	25	52
3	90	25	30	50	104
4	135	40	50	100	156
5	270	75	100	200	311
6	540	150	200	400	621
7	810		300	600	932

3-PHASE JOGGING DUTY

SIZE	CONTINUOUS DUTY AMPS	HORSEPOWER 200 VAC	230 VAC	460 VAC	LIMIT AMPS
0	18	1.5	1.5	2	21
1	27	3	3	5	32
2	45	7.5	10	15	52
3	90	15	20	30	104
4	135	25	30	60	156
5	270	60	75	150	311
6	540	125	150	300	621

NOTE: From NEMA ICS 2-321 B

(d) Motor Conversion Formulas.

TO FIND	DC	AC-Single Phase	AC 3 Phase
AMPS when HP is known	$\frac{\text{HP x 746}}{\text{Volts x Eff}}$	$\frac{\text{HP x 746}}{\text{Volts x Eff x PF}}$	$\frac{\text{HP x 746}}{\text{Volts x 1.73 x Eff x PF}}$
AMPS when KW is known	$\frac{\text{KW x 1000}}{\text{Volts}}$	$\frac{\text{KW x 1000}}{\text{Volts x PF}}$	$\frac{\text{KW x 1000}}{\text{Volts x 1.73 x PF}}$
AMPS when KVA is known		$\frac{\text{KVA x 1000}}{\text{Volts}}$	$\frac{\text{KVA x 1000}}{\text{Volts x 1.73}}$
Kilowatts KW	$\frac{\text{AMPS x Volts}}{1000}$	$\frac{\text{AMPS x Volts x PF}}{1000}$	$\frac{\text{AMPS x Volts x 1.73 x PF}}{1000}$
KVA		AMPS x Volts	AMPS x Volts x 1.73
Power Factor PF		KW/KVA	KW/KVA
HP Output	$\frac{\text{AMPS x Volts x Eff}}{746}$	$\frac{\text{AMPS x Volts x Eff x PF}}{746}$	

$$\frac{\text{AMPS x Volts x 1.73 x Eff x PF}}{746}$$

3.B.2.b(8)(d) (cont'd)

NOTES: (1) Power factor and Efficiency should be expresses in decimals.

(2) If Power Factor is not given, assume 0.8

(3) If Efficiency is not given, assume 0.8

(e) Single Phase Motor: Approximate Load Current.

HP	115V	HP	115V
.33	7.2	2	24.0
.5	9.8	3	34.0
.75	13.8	5	56.0
1.0	16.0	7.5	80.0
1.5	20.0	10	100.0

NOTES: (1) Values are for motors of normal speed and torque.

(2) For additional values, see NEC table 430-148.

(3) For other KW ratings, voltages, and power factors:

$$\text{AMPS} = \frac{\text{KW} \times 1000}{1.732 \times \text{Volts} \times \text{PF}}$$

(f) Motor Locked Rotor Current.

Max. HP	115VAC 1 Phase			208VAC 3 Phase			230VAC 3 Phase			460VAC 3 Phase		
	100%	175%	200%	100%	175%	200%	100%	175%	200%	100%	175%	200%
2	144	252	288	43	75	86	39	68	78	20	35	40
3	204	357	408	59	103	118	54	95	108	27	47	54
5	336	588	672	99	173	198	90	158	180	45	79	90
7.5	480	840	960	145	254	290	132	231	264	66	116	132
10	600	1050	1200	178	312	356	162	284	324	84	147	168
15				264	462	528	240	420	480	120	210	240
20				343	599	686	312	546	624	156	273	312
25				422	739	844	384	672	768	192	336	384
30				515	901	1030	468	819	936	234	410	468
40				686	1201	1372	624	1092	1248	312	546	624
50				825	1444	1650	750	1313	1500	378	662	756
75				1221	2137	2442	110	1943	2220	558	977	1116
100				1624	2874	3248	1476	2583	2952	738	1292	1476

NOTES: (1) These values are to be used only if motor code letter is not provided.

(2) Values above calculated from NEC Tables 430-150, 430-151.

(3) If motor nameplate code letter is provided, the following applies:

3.B.2.b(8)(f) (cont'd)

(a) See NEC Table 430-7(b) for code letter KVA/HP; and

(b) Locked rotor current, IL:

$$\text{3-Phase motors IL} = \frac{\text{HP x (KVA/HP) x 1000}}{\text{1.73 x Volts}}$$

$$\text{3-Phase motors IL} = \frac{\text{577 x HP x (KVA/HP)}}{\text{Volts}}$$

$$\text{1-Phase motors IL} = \frac{\text{HP x (KVA/HP) x 1000}}{\text{Volts}}$$

(g) Continuous-Duty, 3-Phase Motor Approximate F.L.A.

HP	Squirrel Cage			Wound Rotor		
	208V	220V	440V	208V	220V	440V
.5	2.1	1.9	.95			1.0
1	3.7	3.4	1.7	5.9	5.4	2.7
1.5	5.5	5.0	2.5	7.5	6.8	3.4
2.0	6.9	6.3	3.1	8.8	8.0	4.0
2.5	8.4	7.6	3.8	9.7	8.8	4.4
3.0	9.9	9.0	4.5	11.5	10.5	5.3
5.0	16.0	14.5	7.2	17.6	16.0	8.0
6.0	18.9	17.2	8.6	19.8	18.0	9.0
7.5	23	21	10.5	25.3	23	11.5
9.0	27.3	24.8	12.4	28.6	26	13
10	28.6	26	13.5	31.9	29	14.5
20	57.2	52	26	59	54	27
25	71.5	65	32	75	68	34
30	86	78	39	88	80	40
35	101	92	46	103	94	47
40	112	102	51	114	104	52
45	128	116	58	128	116	58
50	139	126	63	141	128	64
60	167	152	76	169	154	77
75	207	188	94	207	188	94
100	275	250	125	275	250	125
125	341	310	155	341	310	155
150	407	370	185	407	370	185
200	539	490	245	539	490	245

NOTES:

(1) To be used in lieu of nameplate data (see NEC 430-6).

(2) Not to be used to size motor running overloads; use nameplate data.

(3) For multi-speed, low speed, special motors, use nameplate data.

(4) For additional information, see NEC Table 430-150.

(5) Range: 220V 220-240VAC
440V 440-480VAC

3.B.2.b(8) (h) Miscellaneous Tables.

CURRENT RATING, RECTANGULAR BUS BARS ON EDGE, 50°C AMB., 50°C RISE, IEEE 45-1983, A27 SINGLE BARS IN PARALLEL, COPPER.

SIZE (inches)	DC	AC, 60HZ
3/4 x 1/8	250	250
1 x 1/8	330	330
1-1/2x 1/8	500	500
1-1/2x 3/16	580	570
2 x 3/16	760	745
1 x 1/4	490	480
1-1/2x 1/4	685	675
2 x 1/4	920	900
3 x 1/4	1380	1280
4 x 1/4	1730	1650
5 x 1/4	2125	2000
6 x 1/4	2475	2300
8 x 1/4	3175	2875

MINIMUM SWITCHBOARD SPACINGS (inches)

	LIVE PARTS, OPP. POLARITY,		BETWEEN LIVE PARTS & GROUNDED
VOLTAGE	OVER SURFACE	THRU AIR	DEAD METAL
125V or Less	3/4	1/2	1/2
126V - 250V	1-1/4	3/4	1/2
251V - 600V	2	1	1

From NEC Table 384-26

NEUTRAL GROUNDING CONDUCTORS, AC SYSTEMS

A.W.G. OF LARGEST GENERATOR CONDUCTOR OR EQUIVALENT FOR PARALLEL GENS.	A.W.G. OF GROUND CONDUCTOR
up to #2	#8
#2 -- #0	#6
#0 -- 3/0	#4
3/0 -- 350 MCM	#2
350 MCM -- 600 MCM	#0
600 MCM -- 1100 MCM	2/0
greater than 1100 MCM	3/0

See 46 CFR 11.05-31(b).

3.B.2.b(8) (i) Generator Continuous Full Load Ampere Ratings.

3-PHASE 0.8 Power Factor

		115%		115%		115%		115%		115%		115%	
KW	KVA	208V	FLA	230V	FLA	240V	FLA	460V	FLA	480V	FLA	600V	FLA
5.0	6.3	17.5	20	15.8	18	15.2	17	7.9	9	7.6	9	6.1	7
7.5	9.4	26.1	30	23.6	27	22.6	26	11.8	14	11.3	13	9.0	10
10.0	12.5	34.7	40	31.4	36	30.1	35	15.7	18	15.0	17	12.0	14
15.0	18.7	52.0	60	47.0	54	45.0	52	23.5	27	22.5	26	18.0	21
20.0	25.0	69.4	80	62.8	72	60.1	69	31.4	36	30.1	35	24.1	28
25.0	31.3	87.0	100	78.6	90	75.3	87	39.1	45	37.6	43	30.1	35
30.0	37.5	104.1	120	94.1	108	90.2	104	47.1	54	45.1	52	36.1	42
40.0	50.0	138.8	160	125.5	144	120.3	138	62.7	72	60.1	69	48.1	55
50.0	62.5	173.5	200	156.9	180	150.3	173	78.4	90	75.2	86	61.1	70
60.0	75.0	208.2	239	188.3	217	180.4	207	94.1	108	90.2	104	72.2	83
75.0	93.8	260.4	300	235.4	271	225.6	259	117.7	135	112.8	130	90.3	104
100.0	125.0	347.0	399	313.8	361	300.7	346	156.9	180	150.4	173	120.3	138
125.0	156.0	433.0	498	391.6	450	375.3	432	195.8	225	187.6	216	150.1	173
150.0	187.0	519.1	597	469.4	540	449.8	517	234.7	270	224.9	259	179.9	207
175.0	219.0	607.9	699	549.6	632	526.7	606	274.8	316	263.3	303	210.7	242
200.0	250.0	694.0	798	627.6	722	601.4	692	313.8	361	300.7	346	240.6	277
250.0	312.0	866.1	996	783.2	900	750.5	863	391.6	450	375.3	432	300.2	345
300.0	375.0	1040.1	1196	941.3	1082	902.1	1037	470.7	541	451.1	519	361.0	415

NOTES: (1) Generator cables shall be capable of carrying at least 115 percent generator continuous F.L.A. (see 46 CFR 111.60-7).

(2) Generator circuit breaker long time overcurrent trip shall not exceed 115 percent generator continuous F.L.A. (see 46 CFR 111.12-11).

3.B.2.b(8) (j) Transformer Full Load Currents.

FULL LOAD CURRENTS
3-PHASE TRANSFORMERS
Voltage (Line to Line)

KVA Rating	208	240	480	800	2400	4180
3	8.3	7.2	3.6	2.9	.72	.415
6	16.6	14.4	7.2	5.8	1.44	.83
9	25	21.6	10.8	8.7	2.16	1.25
15	41.6	36.0	18.0	14.4	3.6	2.1
30	83	72	36	29	7.2	4.15
45	125	108	54	43	10.8	5.25
75	208	180	90	72	18	10.4
100	278	241	120	96	24	13.9
150	416	360	180	144	36	20.8
225	625	542	271	217	54	31.2
300	830	720	360	290	72	41.5
500	1390	1200	600	480	120	69.4
750	2080	1800	900	720	180	104
1000	2775	2400	1200	960	240	139
1500	4150	3600	1800	1440	360	208
2000	5550	4800	2400	1930	480	277
2500	6950	6000	3000	2400	600	346
5000	13900	12000	8000	4800	1200	694
7500	20800	18000	9000	7200	1800	1040
10000	27750	24000	12000	9600	2400	1366

For other KVA Ratings or Voltages:

$$\text{Amperes} = \frac{\text{KVA} \times 1000}{\text{Volts} \times 1.732}$$

3.B.2.b(8)(j) (cont'd)

FULL LOAD CURRENTS
SINGLE PHASE TRANSFORMERS

KVA Rating	Voltage 120	208	240	480	600	2400
1	8.34	4.8	4.16	2.08	1.67	.42
3	25	14.4	12.5	6.25	5.0	1.25
5	41.7	24.0	20.8	10.4	8.35	2.08
7.5	62.5	36.1	31.2	15.6	12.5	3.12
10	83.4	48	41.6	20.8	16.7	4.16
15	125	72	62.5	31.2	25.0	6.25
25	208	120	104	52	41.7	10.4
37.5	312	180	156	78	62.5	15.6
50	417	240	208	104	83.5	20.8
75	625	361	312	156	125	31.2
100	834	480	416	208	167	41.6
125	1042	800	520	260	208	52.0
167.5	1396	805	698	349	279	70.0
200	1666	960	833	416	333	83.3
250	2080	1200	1040	520	417	104
333	2776	1600	1388	694	555	139
500	4170	2400	2080	1040	836	208

For other KVA Ratings or Voltages:

$$\text{Amperes} = \frac{\text{KVA} \times 1000}{\text{Volts}}$$

C. Equipment.

1. Acceptable Equipment.

a. Introduction.

(1) Type Approvals. The Coast Guard only grants type approvals for the electrical, lifesaving and engineering equipment listed in 46 CFR, Subchapter Q. All other equipment is to meet the requirements of the applicable subchapter. The determination as to acceptability will be made through plan review and inspection on an individual basis by the MSC or the OCMI, respectively. Equipment that is required to meet a certain UL standard need not be listed by UL, but must be constructed and inspected to that standard. Equipment that is listed by UL should generally be accepted as meeting this requirement without further review.

(2) FAQ. Frequently Asked Questions:

(a) What equipment is supposed to be Coast Guard approved? All equipment installed on vessels subject to Coast Guard inspection and certification is subject to some degree of inspection and approval. Certain items are subject to inspection and approval even when carried aboard vessels not required to be inspected and certificated, such as fishing vessels and yachts. The extent of inspection and the type of approval varies with the requirements of laws and

3.C.1.a(2) (a) (cont'd) regulations, as well as the hazards involved. In judging the quality and suitability of equipment used on vessels, the primary considerations are safety of the vessel, safety of personnel, and performance of a safety function. Various items of lifesaving, firefighting, pollution prevention equipment, and miscellaneous equipment used aboard inspected and uninspected vessels are required by statutes and regulations to be of types that are "approved" by the Coast Guard. To be an "approved" type, equipment must be manufactured in accordance with standards published in Title 46 Code of Federal Regulations Subchapter Q, or when specifically permitted by regulation, must comply with the standards of a classification society that is recognized by the Commandant. To this end, the manufacturer must submit plans and specifications to the Coast Guard. The manufacturer is also responsible for the necessary tests or inspection of the device as required by regulations. Upon its approval, the product must be labeled so that it can be identified as approved equipment. The equipment is assigned an individual approval or certification number. The Coast Guard Internet site http://www.uscg.mil/hq/g-m/mse/mse-home.htm lists those equipment that require USCG approval.

(b) Why can't I get Coast Guard Approval for my equipment? Coast Guard approval is not a product endorsement. The Coast Guard does not try to be a "consumer's bureau" for buyers, or a "marketing promotion bureau" for manufacturers. Many inventors and enterprising manufacturers have often tried to get the Coast Guard to approve such things as man overboard alarms, shark repellents, distress kites and balloons. The inability to obtain Coast Guard approval for such devices does not indicate that they are bad ideas, but only that there are no Coast Guard regulations requiring them on any vessel. The purpose of Coast Guard approval is not to provide marketing assistance to manufacturers, but to provide information to vessel owners concerning equipment that has been found to meet the regulatory requirements.

(c) What does the Coast Guard Certificate of Approval mean? The certificate of approval is issued to the manufacturer of the equipment and is normally valid for 5 years. The manufacturer will often supply the consumer a copy of the certificate to keep on board the vessel. The approval of the item covered by the certificate is valid only so long as the item is manufactured in conformance with the details of the approved drawings, specifications, or other reference data. No modification in the approved design, construction, or materials is to be adopted until the Coast Guard has presented the modification for consideration and confirmation received that the proposed alteration is acceptable.

Equipment required meeting standards listed in 46 CFR 110.10-1(b): Equipment required meeting standards found in 46 CFR 110.10-1(b) are usually certified by the manufacturer to be in accordance with these standards. The manufacturer's marking on the item usually indicates compliance with the standard.

3.C.1.a(2) (c) (cont'd) The regulations sometimes require equipment to meet UL Standards. For these items listing by UL is not required. The UL Listing Mark on the equipment is the manufacturer's representation that the completed product has been tested by UL to a nationally recognized safety standard. Those items that require certification from a nationally recognized testing laboratory or require listing marks will have the requirement specifically called out in the regulations.

b. Acceptance Standards.

(1) General. The standards that are referenced for electrical systems and equipment are listed in 46 CFR 110.10-1. Except where it is specified that equipment must be labeled in accordance with an industry standard, only general compliance with the standard is required. Equipment required to meet a UL standard need not have a UL label, though some equipment requires evidence of listing, such as fuses (46 CFR 111.53-1). Other equipment is required to be tested to a specified standard by a Coast Guard Accepted Independent Laboratory, for example hazardous area equipment (46 CFR 111.105, list of accepted labs available at: http://www.uscg.mil/hq/g-m/mse/mse-home.htm). Certain equipment, such as lifesaving and firefighting systems, is required to be formally approved in accordance with Subchapter Q. An agreement between the United States of America (US) and the European Community (EC) on mutual recognition of certificates of conformity of marine equipment became effective on 01 July, 2004. This agreement allows reciprocal approvals to be given by both the US and the EC for certain marine products where it has been found that the approval process is identical or equivalent. Complete information regarding this arrangement can be found in the "Guide to Marine Equipment Approvals Covered by US-EC MRA", COMDTPUB P16700.4, NVIC 8-04.

(2) Standards Updates. The regulations reference many industry standards. For the most part, these standards are dynamic and ever-changing. The "official" referenced edition of an industry standard is listed in the "Finding Aids section of the CFR. Often, that edition may not be the latest edition of the standard. This could create availability problems; where the requirements of a standard have changed, and where manufacturers have modified their equipment to meet the later version, equipment may not be available that meets the referenced edition. However, standard changes often respond to an identified problem or hazard, and usually result in safer equipment. In most instances, equipment constructed and tested in accordance with a more recent edition of a referenced document can be accepted as providing a level of safety equivalent to that provided by equipment constructed and tested to the edition identified in the CFR.

(3) Equivalency. One of the purposes of the Marine Inspection Program is to provide passengers and crew on U.S. flag vessels with an environment that has a level of safety comparable to that ashore. In most domestic "land" installations, electrical equipment is of U.S. manufacture and is listed by an independent

3.C.1.b (3) (cont'd) electrical equipment certification agency acceptable to the governing jurisdiction. In the majority of installations in this country, the equipment is listed by Underwriters Laboratories Inc. (UL). The existing Coast Guard Electrical Engineering Regulations evolved from this situation. With the movement of U.S. flag construction abroad, there has been an influx of electrical equipment that is constructed to meet other standards and that is listed by independent third party certifying agencies similar to UL. Some equipment is built to manufacturer's standards and is not third party certified. Both of these types of equipment need to be evaluated for equivalence to the standards referenced in the Electrical Engineering Regulations before acceptance for installation.

The Electrical Engineering Regulations require many electrical items to meet a specific UL Standard. For such items, listing by UL is not required. While evidence of such listing may be the most expeditious method to determine compliance, it is not the only method. 46 CFR 110.25-1 calls for the submission of plans and information to evaluate equipment required to meet a referenced standard. Equipment may be accepted by having evidence of listing, by manufacturer's certification, or by determining the standard it does meet is equivalent to the referenced standard.

(4) Manufacturer Certification. Equipment required to meet an IEEE or NEMA standard or a military specification (e.g. cable or switchgear) is usually certified by the manufacturer to be in accordance with the standard. Equipment manufactured in the U.S. is usually designed to these standards, and it is not uncommon for foreign equipment to be designed to these standards. The manufacturer's marking on the item usually indicates compliance with the standard. This is adequate to demonstrate compliance with the regulations.

(5) Standards Comparisons. More commonly, however, foreign equipment is designed to foreign national and/or International Electrotechnical Commission (IEC) standards, and compliance with, or equivalence to, the referenced document must be determined. The usual starting point for an equivalency determination has been the "line-by-line comparison" demonstrating that the construction and testing of the particular equipment meets, or is "equivalent" to, the referenced document.

(a) Standards Comparisons Guidelines. Evaluation efforts must involve the exercise of "good engineering judgment" to reduce the burdens of line-by-line comparisons imposed on a case-by-case basis. Although "good engineering judgment" is typically "something someone didn't have when something happened that shouldn't have," there are several basic guidelines that recognize limited review resources and that are appropriate in assessing electrical equipment equivalency:

i. The level of evaluation should be commensurate with the level of risk imposed by the item. For example, an outlet box is a relatively simple passive item,

3.C.1.b(5)(a)

i. (Cont'd) providing protection and access to a few simple components, while a circuit breaker is a complex active device that is designed to operate at varying times under both small overloads and large damaging faults, providing system-wide protection. The evaluation of a circuit breaker should be far more involved than the review of an outlet box. This does not mean that evaluation of an outlet box is not important; however, the evaluator should not need to spend an inordinate amount of time to obtain a reasonable level of confidence that the equipment will perform in a safe manner. The evaluator should ask some basic questions: "What will happen if this equipment fails? Will someone be shocked? Will it start a fire? Will a failure be readily apparent during normal operations or will it be hidden and gradually worsen? Does the system design provide additional safety measures that mitigate the effect of the failure? How likely is this failure?"

ii. The evaluator should have a reasonable level of confidence in the equipment. Obtaining this level of confidence with equivalencies often involves subjective judgments concerning the manufacturer as well as specific, technical determinations regarding the hardware itself. A well-known manufacturer that has been in business for an extended period, is a recognized leader in his field, has contributed to the development of industry standards, and has a solid reputation may not need close scrutiny. On the other hand, a "newcomer" to the equipment field or U.S. market place, or an organization that is outside its primary business, such as a shipyard that now decides to manufacture its own panelboards and lighting fixtures just for a particular vessel, may need a higher initial level of review to obtain that same level of confidence.

iii. The evaluator should look for the safety intent in referenced standards. Industry standards have evolved over many years, and for the most part, represent a national consensus by technical professionals of what is required to ensure that electrical equipment is safe. It is not easy to look at a standard, such as a UL standard and identify those requirements that are not related to safety. Nearly all requirements are safety related, either directly, such as by ensuring adequate dielectric strength or indirectly, such as by ensuring adequate mechanical strength so the equipment can safely withstand the rigors of installation and use. For equipment built to another standard, the evaluator should see if that standard adequately addresses the concerns addressed by the referenced standard.

Equipment evaluators should use the above guidelines in evaluating electrical equipment and in comparing it to the requirements of a referenced standard. To facilitate the review process, the following procedures may be used:

3.C.1.b(5) (b) Standards Comparisons, Industry Standards. For equipment required to be constructed to an industry standard (domestic or foreign) and either listed by a nationally recognized (domestically or in the foreign nation) independent testing laboratory or certified by the manufacturer to be in compliance with the standard:

i. Manufacturer should submit evidence of listing (listing number in bill of materials, copy of listing card or documentation provided by the laboratory) or affidavit of compliance. The documentation should identify the specific construction and testing standard.

ii. Evaluators should establish that the foreign standard is complete, applicable and comparable to the referenced standard. (They may request a copy of the standard and/or that a standards comparison be submitted). This comparison may establish whether the overall level safety provided by the foreign standard is comparable to that provided by the referenced standard, including applicable marine supplements.

iii. For specific items for which comparability has not been established by comparing standards, such as would be the case if the foreign standard was for "land type" equipment and did not have requirements comparable to those in the marine supplement of a referenced UL standard, the manufacturer should submit documentation demonstrating compliance with the supplement requirements.

iv. Once standard comparability has been established for similar applications, no further comparisons need be requested on subsequent submittals using the same foreign standard. If the edition of either the referenced standard, as identified in the Finding Aids Section of the CFR, or of the foreign standard has changed, the specific changes need to be re-evaluated. To this end, the evaluators should maintain a listing of acceptable "equivalent" foreign standards, citing the specific editions compared. Additionally, the specific submitter should be encouraged to reference the acceptance letter in future submittals.

(c) Standards Comparisons, Not National Standards. For equipment not constructed to nationally (foreign or domestic) recognized standards:

i. The equipment manufacturer should submit a complete line-by-line comparison of actual construction and testing to that required by the reference standard, including any applicable marine supplement. Testing may be performed by the manufacturer. For those areas that are not in complete compliance with the reference standard, the manufacturer should submit technical

3.C.1.b(5)(c)

i. (cont'd) arguments for equivalency. These should be evaluated using the guidelines previously discussed.

ii. Once equipment comparability has been established, no further comparisons need be requested for that specific equipment from that specific manufacturer when equipment use is proposed on another vessel (again, this assumes the referenced edition has not changed). Listings should be maintained and notifications should be made in a manner similar to that used for standards comparability. The manufacturer should provide a copy of the acceptance letter with subsequent submittals.

iii. For issues that can be resolved based upon on-site visual examination, the evaluator may defer the acceptability of that equipment to the inspection activity (Officer-in-Charge, Marine Inspection or an authorized Classification Society acting on behalf of the Coast Guard in accordance with 46 CFR 8). In such cases, the specific issue deferred should be fully identified and documented. The inspection activity should also document the acceptance or rejection, and provide the plan review activity with inspection comments on deferred issues. The above procedure is for equipment required to meet a referenced standard. It should NOT be used for equipment required to be listed or labeled by an independent third party certification agency (i.e. fuses and equipment for use in hazardous locations). Note that the Marine Safety Manual Vol. II, B.5.E.4 permits the OCMI to accept on vessels of the Military Sealift Command, equipment or materials complying with any of the following: (1) technical bureaus of the U.S. Navy; (2) MILSPEC's; (3) federal specifications for military purchases, and; (4) National Military Establishment (NME) specifications.

c. Testing. Equipment that is to be type-approved must be tested in accordance with the applicable requirements of Subchapter Q. These tests shall be performed by an independent testing laboratory as defined in 46 CFR 159.010-3, or by the manufacturer and witnessed by a Coast Guard inspector.

2. Equipment Lists, COMDTINST M16714.3.

a. Introduction. Officially this is published in hardcopy as COMDTINST M16714.3; the latest printing was in May, 1994. The Office of Design and Engineering Standards, Commandant (G-MSE), publishes on-line USCG approved and certificated equipment list (available at: http://cgmix.uscg.mil/). This equipment list contains specific lifesaving, firefighting, pollution abatement, navigation, electrical, and miscellaneous equipment used aboard vessels that are required by certain navigation and vessel inspection laws and regulations to be of types that are approved or certified by the Commandant. Much of the equipment requiring review by Commandant can be located in subchapter Q of Title 46. Drawings and specifications for equipment are examined to advise manufacturers and prospective

3.C.2 a. (cont'd) purchasers whether such items when manufactured or installed will be acceptable for marine use. The need to have approved or certified equipment aboard a particular type of vessel depends upon the requirements of the laws and regulations applicable to that vessel. General authority over and responsibility for the administration and enforcement of the navigation and vessel inspection laws and regulations applicable to instruments, machines, and equipment used on vessels are vested in the USCG District Commander.

b. Application of Listings. The equipment list is an aid for persons desiring to install equipment of a type required to be approved or certified by the Commandant, and lists most of those items approved or certified by the Commandant. If an installed piece of equipment is not in the Equipment List Index that does not necessarily mean that such equipment must be replaced with that listed in the Equipment Lists. In connection with certain items, approval has been required by the regulations after certain dates, as set forth in the regulations. The equipment installed and in use on those dates are permitted to be retained in service so long as it remains in good and serviceable condition. When a previously approved piece of equipment is no longer serviceable, it must be replaced with currently approved equipment. The approval or certification of the items listed applies only to those specific items and does not extend to other devices or products that may be produced by the same manufacturer. The products listed under the various headings are not necessarily equivalent for a specific service and such listing indicates only that the minimum requirements of the statutes and regulations in effect at the date of the listing were met. If any of the items listed are found in the marketplace not to comply with the requirements of the statutes or regulations, such information, together with details regarding the deficiencies or defects believed to exist, should be brought to the attention of the cognizant District Commander.

c. Limitations of Listings. To keep outstanding approvals and certifications current, most are limited to a definite period of time. Most approved and certified instruments, machines, and equipment are limited to 5-year periods. If there have been no changes in Coast Guard requirements and the manufacturer is still producing the item without modification, an extension for an additional 5-year period is granted, provided the manufacturer requests an extension from Commandant (G-MSE). If the equipment is no longer produced and the certificate expires, the equipment continues to be considered certified based on the date of manufacture, the vessel installation date and a valid certification for that time period. Certification cannot be transferred to another manufacturer without Commandant (G-MSE) approval. Any modification to the design or construction requires review by the Coast Guard, and if approved the manufacturer will be issued a modified certificate. To identify equipment in this group further, those items that comply with Coast Guard specifications and regulations are assigned individual approval or certification numbers. For example 160.017/105/1 represents the 105th chain (embarkation) ladder approved for service and the certificate has been modified once.

d. Approvals Under Subchapter Q. Subchapter Q electrical equipment (see 46 CFR 161) is required to be "approved" by the Commandant and is

3.C.2 d. (cont'd) listed in the Equipment List Index. The following electrical equipment receives approval under Subchapter Q:

ELECTRICAL EQUIPMENT:

(1). 161.002 — Fire-Protective Equipment.
(2). 161.006 — Searchlights, Motor Lifeboat, for Merchant Vessels.
(3). 161.010 — Floating Electric Waterlights. Inspectors should continue to submit equipment failure reports on defective waterlights. However, quite often these lights have had their approvals superseded by new approvals. Waterlights that are approved at the time of installation and then have their approvals superseded may continue in service as long as they are operational.
(4). 161.011 — Emergency Position Indicating Radiobeacons.
(5). 161.012 — Personal Flotation Device Lights.
(6). 161.013 — Electric Distress Light for Boats.
(7). 165.101 — Magnetic Compass
(8). 165.102 — Transmitting Magnetic Heading Device (TMHD)
(9). 165.103 — Gyrocompass
(10). 165.105 — Speed and Distance Indicating Device
(11). 165.106 — Rate of Turn Indicator
(12). 165.107 — Echosounding Equipment
(13). 165.110 — Heading Control System
(14). 165.111 — Auto-Tracking Aid
(15). 165.112 — Track Control
(16). 165.120 — Automatic Radar Plotting Aid (ARPA)
(17). 165.121 — Electronic Plotting Aid
(18). 165.122 — Chart Facilities for Shipborne Radar
(19). 165.123 — Electronic Chart Display and Information System (ECDIS)
(20). 165.124 — ECDIS Back-up Equipment
(21). 165.125 — Raster Chart Display System (RCDS)
(22). 165.130 — Global Positioning System (GPS)
(23). 165.131 — Global Navigation Satellite System (GLONASS) Equipment
(24). 165.132 — Differential Global Position System (DGPS) Equipment
(25). 165.133 — Differential Global Navigation Satellite System (DGLONASS)Equipment
(26). 165.134 — Combined Global Position System and Global Navigation Satellite System (GPS/GLONASS) Receiver Equipment
(27). 165.135 — LORAN-C Equipment
(28). 165.136 — Chayka Equipment
(29). 165.140 — Integrated Bridge System
(30). 165.141 — Integrated Navigational System
(31). 165.150 — Voyage Date Recorder (VDR)
(32). 165.155 — Shipborne Automatic Identification System (AIS)
(33). 165.160 — Radar Reflector
(34). 165.165 — Sound Reception System
(35). 165.166 — Daylight Signaling Lamp
(36). 165.203 — Gyrocompass for High Speed Craft
(37). 165.210 — Automatic Steering Aid (automatic pilot) for High Speed Craft
(38). 165.251 — Night Vision Equipment for High Speed Craft

Part 162 of Subchapter Q lists the Engineering Equipment also requiring approval by the Commandant and is listed in the Equipment

3.C.2 d. (cont'd) List Index. The Marine Safety Center has been delegated the responsibility for the following engineering equipment approvals MECHANICAL EQUIPMENT:

(1). 162.017 — Pressure Vacuum Relief Valves for Tank Vessels
(2). 162.018 — Liquefied Compressed Gas Safety Relief Valves
(3). 162.050 — Pollution Prevention Equipment:
(a) 15 ppm Oil-Water Separator (OWS)
(b) Cargo Monitor
(c) Bilge Monitor
(d) Bilge Alarm

3. Engineering Applications for Pollution Prevention.

a. Marine Sanitation Devices (MSDs).

(1) Introduction. Type I, II and some type III MSD's receive certification by the MSC Engineering Division, Machinery Branch and listed in the on-line Equipment List Index and MISLE (available online at: http://cgmix.uscg.mil). Type III systems that operate at ambient temperature and pressures do not require approval nor will they receive a certificate or be labeled as Coast Guard approved. The MSC reviews the chemical processes and mechanical tests involved for compliance with 33 CFR 159. A Coast Guard accepted Independent Laboratory that has met the requirements of 46 CFR 159.010 must perform all tests required by 33 CFR 159. Typically, the application for an MSD is submitted to the MSC through the independent lab. A list of approved independent labs is available on-line at the Commandant (G-MSE-3) website. MSD systems installed aboard inspected vessels must also comply with 46 CFR, Subchapters F and J IAW 33 CFR 159.97. Subchapter F compliance involves design and fabrication requirements of the tanks, piping, valves, and appurtenances that are combined to make up an MSD system for use in inspected vessels. Specific individual acceptance by the MSC is possible for MSD systems not labeled for inspected vessels.

(2) MSD Tanks. Non-pressure vessel type tanks must be constructed of acceptable materials listed in 46 CFR 56.60 or equivalent materials, and vented in accordance with 56.50-85. Tanks with a MAWP exceeding 15 psig must be designed as pressure vessels in accordance with Section VIII, Division 1 of the ASME Code for Pressure Vessels, as amended by 46 CFR 54.

(3) Piping Systems. Piping systems and appurtenances associated with pressure vessels must be designed in accordance with the Code for Power Piping, ASME B31.1, as limited or modified by 46 CFR 56. Piping systems and appurtenances associated with non-pressure vessel-type tanks must be constructed of acceptable materials listed in 46 CFR 56.60-1 or 46 CFR 56.60-25, or shown to be equivalent. Polyvinyl chloride (PVC) is an acceptable material in MSD systems based on U.S. Navy Report #DINS Roc-78/041. This report basically states that methane gas is not produced in a combustible quantity in shipboard MSD systems. However, the process temperature and chemicals must also be considered in material selection.

3.C.3.a (4) Electrical Systems. MSD electrical systems are reviewed for compliance with Subchapter J. Overcurrent protection shall be provided in accordance with 46 CFR 111.50. Wiring shall be in accordance with 46 CFR 111.60. Motors shall be rated to the ambient temperature of the space in accordance with 46 CFR 111.01-15.

(5) MSD's prior to 1/30/76. MSDs made on or before 30 January 1976 were not process tested to the FWPCA requirements. These older plants, and some custom-built systems, may be certified under 33 CFR 159.12(c), by Coast Guard letter to the manufacturer or vessel owner. A copy of the letter should be kept aboard the vessel as evidence of compliance. These MSDs shall not be labeled under 33 CFR 159.15.

b. Oily Water Separators (OWS).

(1) Introduction. These devices are likewise approved by the MSC, which reviews such systems for compliance with 46 CFR 162.050 and lists the approved equipment in Equipment List Index. 46 CFR 162.050-21 requires OWS's to comply with Subchapters F and J. Subchapter F compliance involves design and fabrication requirements for the tanks, piping, valves, and other appurtenances that are combined to make up an OWS. To comply with Subchapters F and J, the following requirements must be met:

(2) Tanks. Non-pressure vessel-type tanks must be designed in accordance with 46 CFR 58.50-1 and vented in accordance with 46 CFR 56.50-85. Tanks with a MAWP exceeding 15 psig must be designed as pressure vessels in accordance with Section VIII, Division 1 of the ASME Code for Pressure Vessels, as amended by 46 CFR 54. However, ASME stamping of OWS's is not necessary. Filters, coalescers, and similar devices must meet the applicable requirements of 46 CFR 56.15-1.

(3) Piping. Piping systems and appurtenances must be designed in accordance with ASME B31.1, as limited or modified by 46 CFR Table 56.01-5(a). [NOTE: Most OWS's, monitors, and alarm piping will be treated as Class II piping (46 CFR Table 56.04-2).] Materials for piping appurtenances must be selected from the specifications given in Table 56.60-1(a) or Table 56.60-2(a), or other acceptable specifications listed in 46 CFR 56.60.

(4) Valves. Valves must be designed in accordance with the requirements in 46 CFR 56.20. Materials for valves must meet the specification requirements of 46 CFR 56.60-1.

(5) Electrical. Overcurrent protection shall be provided in accordance with 46 CFR 111.50. All wiring shall be in accordance with 46 CFR 111.60. Motors shall be rated to the ambient temperature of the space in accordance with 46 CFR 111.01—15.

c. Incinerators.

(1) Introduction. Shipboard incinerators are used to reduce waste volumes generated on board vessels, thus reducing the storage, handling and cost to dispose of waste. This includes victual

3.C.3.c (1) (cont'd) wastes, oily residues, dunnage, paper, packing materials and possibly sewage. The waste heat of some incinerators may in turn be used for boiler applications. Items that are not allowed to be burned are: Annex I, II, and III of MARPOL 73/78 cargo residues and related contaminated packing materials; Polychlorinated biphenyls (PCBs); garbage, as defined in Annex V of MARPOL 73/78, containing more than traces of heavy metals; and refined petroleum products containing halogen compounds. The U.S. is signatory to Annexes I, II, III and V.

Incinerators installed on or after March 26, 1998 must meet the requirements of IMO resolution MEPC.76(40) and an application must be type approved by the Marine Safety Center. Incinerators in compliance with ISO standard 13617, "Ships and Marine Technology-Shipboard Incinerators-Requirements," are considered to meet the requirements of IMO resolution MEPC.76(40). Incinerators in compliance with both ASTM F 1323, "Standard Specification for Shipboard Incinerators" and Annexes A1-A3 of IMO resolution MEPC.76(40) are considered to meet the requirements of IMO resolution MEPC.76(40).

(2) Testing by Independent Labs. Before type approval is granted the manufacturer shall have emission tests conducted, or submit evidence that such tests have been conducted by an independent laboratory acceptable to the Marine Safety Center, in accordance with the emissions annex in MEPC.76(40), that:
(a) Has the equipment and facilities for conducting the inspections and tests required by this section.
(b) Has experienced and qualified personnel to conduct the inspections and tests required by this section.
(c) Has documentation indicating the laboratory's qualifications to perform the inspections and tests required by this section.
(d) Is not owned or controlled by a manufacturer, supplier, or vendor of shipboard incinerators.

(3) Standards. The EPA has established emissions testing standards that are laid out in Appendix A of 40 CFR 60. Methods 1, 3A, 5, 9 and 10 o f Appendix A may be utilized by the laboratory in determining emissions related information described in Annex A1.5 of Resolution MEPC.76(40). Alternatively ISO standard 9096 (1992) "Stationary source emissions - Determination of concentration and mass flow rate of particulate material in gas-carrying ducts - Manual gravimetric method" maybe considered as an alternative to Method 5 and ISO standard 10396 (1993) "Stationary source emissions - Sampling for the automated determination of gas concentrations" may be used in lieu of Methods 3A and 10.

(4) Testing after installation. Incinerators, upon installation, should be tested in accordance with section 7.3 of MEPC.76(40). This section describes the various installation tests to ensure safe operation. Examples of some of the tests include fuel supply, flame safeguard and combustion controls.

(5) Operations and Training. All ships with approved incinerators must possess a manufacturer's operating manual specifying how to

3.C.3.c (5) (cont'd) operate the incinerator within the limits described in Annex A1.5 of Resolution MEPC.76(40). Personnel responsible for operation of any incinerator must be trained in its operation and capable of following the procedures and instruction in the manufacturer's operating manual.

d. Pressure-Vacuum Relief Valves.

(1) Introduction. PV valves are devices installed on board product carriers such as tank vessels and barges, which prevent over and under pressurization of a cargo tank as well as the passage of flame into or out of the tank. The PV valve is particularly valuable during cargo operations when the tank is most vulnerable to pressure changes and explosive atmosphere conditions. PV valves typically use weighted discs whose resistance must be overcome to relieve pressure or reduce vacuum. Flame screens of 30x30 or two 20x20 mesh spaced ½" to1.5" apart are also required unless the valve is considered "high velocity" where the escaping vapors must travel at a velocity no less than 30 m/s (99 ft/s) thus avoiding the explosive range.

(2) Design Requirements. These devices are reviewed for compliance by the Marine Safety Center using the standards in 46 CFR 162.017 or alternatively the IMO's Marine Safety Committee Circular 677 entitled "Revised standards for the design, testing and locating of devices to prevent the passage of flame into cargo tanks in tankers" as amended by Circular 1009 of June 8, 2001. Circular 677 references ISO standard 15364:2000 "Ships and marine technology - Pressure/vacuum valves for cargo tanks." A valve meeting the construction and performance testing standards of either the U.S. or IMO regulation, which are functionally equivalent, will receive a Certificate of Approval good for five years. Both foreign and domestic manufacturing firms can submit applications for certification of valves installed on board vessels operating within U.S. jurisdiction.

(3) Fire Safety. Ideally, when flammable cargoes are transported in a vessel cargo tank, the vapor that forms in the ullage space is either too rich to burn or it is inerted (oxygen deficient) and, therefore, unable to burn. In each case, the vapor concentration is maintained outside of the cargo's flammability range.

The maximum vacuum pressure that one would not want to exceed for fear of damaging (imploding) the cargo tank is covered in 33 CFR 154.814(b). Conversely, 46 CFR 39.20-11(a)(4) dictates a minimum vacuum pressure that is established to prevent air (oxygen) from entering a tank and creating a flammable atmosphere within the ullage space. Specifically the vacuum valve must not open until the vacuum drops below -0.5 psi. For example, a valve which opened at a vacuum of -0.4 psi would not meet the regulations. 46 CFR 39.10-1(a) states that the regulations for vapor control systems are written for vapors of crude oil, gasoline blends, and benzene. Consult Commandant (G-MSO-3) for issues involving systems handling vapors of other flammable cargoes.

3.C.4. Special Equipment Approvals.

a. General. Certain lifesaving equipment, electrical equipment, engineering equipment, pollution abatement equipment, and materials are required by law to be "Coast Guard approved" under specifications in 46 CFR, Subchapter Q. Once such equipment is approved, it is listed in the applicable subpart section of Equipment List Index, http://cgmix.uscg.mil/. The approval or certification of items listed applies only to those specific items, and does not extend to other devices or products that may be produced by the same manufacturer. Most approvals are limited to 5-year periods. Extensions for additional 5-year periods may be requested when there have been no changes to Coast Guard requirements and the manufacturer has made no modifications to the equipment. "Approved" equipment should not be confused with the eliminated Manufacturer's Affidavit System, which listed acceptable manufacturers of valves, flanges, and fittings or with the list of acceptable hydraulic components. In 1989, this system was removed in favor of incorporating industry developed standards; see 54 FR 40598, October 2, 1989. (see Marine Safety Manual, Volume II, Materiel Inspection, COMDTINST M16000.7 (series))

b. Quick-Disconnect Couplings.

(1) Introduction. With new regulations concerning oil pollution prevention, the Engineering Branch was tasked with the review and granting of specific approvals for quick disconnect couplings (QDC's) (see 33 CFR 154.500-d(3) and 33 CFR 156.130-c(2)). Approvals granted before 19 July 1974 continue to be acceptable; however, revised or redesigned couplings must meet ASTM F-1122.

(2) Acceptance Procedures. In the past, QDC's plans and supporting data (calculations, test reports, material lists, etc.) were submitted to Commandant (G-MSE-3) for approval. QDCs no longer receive specific USCG equipment approval. QDCs must be designed, manufactured, tested and marked in accordance with ASTM F 1122, "Standard Specification for Quick Disconnect Couplings."

c. Flame Barriers.

(1) Introduction. Coast Guard regulations require flame barriers in various venting applications. The two types required are flame screens and flame arresters. Applicable regulations for flame screens are found in Subchapter D (46 CFR 30.10-25 and 32.55), Subchapter F (46 CFR 56.50-85), and Subchapter T (46 CFR 450). Flame screens may not be used where the regulations require an approved flame arrester. Flame screens are approved by the OCMI. Flame arresters are required where a more effective flame barrier than a flame screen is needed. The type of vapor present determines whether an arrester is required. Approved flame arresters may be accepted in lieu of flame screens on an equivalency basis. Arresters that consist of a cellular, tubular, or baffle-type "grids" retained by a housing or flanges, are approved by Commandant (G-MSO-3) and are assigned approval numbers. Approval is based on review of design and on the result of performance testing. Installation of a flame arrester must not be permitted unless the device bears the Coast Guard approval number 162.016.

3.C.4.c (2) Design Requirements. Flame barriers are intended to prevent passage of flames outside a tank vent into the tank. They must be designed with openings too small to allow flame passage, but sufficiently large not to obstruct vapor flow. These devices should normally be mounted at the opening of the vent or vent stack. Barriers installed in the vent away from the opening may not be effective since the flame front will rapidly accelerate once it enters the pipe. The safety of installations with screens or arresters away from the opening should be demonstrated by suitable testing. Flame barriers should be durable, corrosion resistant, and have a low susceptibility to fouling. Careful periodic inspection and cleaning are very important. Screen type elements are only effective if they are undamaged by punctures or tears in the wire mesh, and there are no holes or gaps around the periphery larger than the openings specified for the 20x20 or 30x30 mesh screen.

d. Navigation Equipment.

(1) Design Requirements. The 2000 SOLAS (Safety of Life at Sea) amendments came into force on 01 July 2002. Regulations V/18.1 and 18.5 of these amendments require navigation equipment installed on ships to be type approved by the Administration. The regulations also call for the Administration to require manufacturers to produce approved navigation equipment under a quality system audited by a competent authority. Approval of Navigation Equipment for Ships, COMDTPUB P16700.4, NVIC 8-01 CH-1, describes the standards, regulations and processes for the approval of navigation equipment.

e. Resiliently Seated Valves.

(1) Introduction. RSV's are valves that stop the passage of flow using resilient nonmetallic material instead of a metal-to-metal seat. Valves of this type must meet the specifications of 46 CFR 56.20-15. There are three categories, Positive shutoff, Category A, and Category B.

(2) Acceptable Locations. Positive shutoff valves are required in piping subject to an internal head pressure from a tank containing oil and must be located at the tank; see 46 CFR 56.50-60(d). Category A valves may be used in any location except where positive shutoff valves are required. Category A valves are required in the following locations:
(a) Valves at vital piping system manifolds;
(b) Isolation valves in cross-connects between two piping systems, at least one of which is a vital system, where failure of the valve in a fire would prevent the vital system(s) from functioning as designed; or
(c) Valves providing closure for any opening in the shell of the vessel.

Category B valves are not required to be tested and may be used in any location except where a Category A or positive shutoff valve is required.

3.C.4.e (3) Testing. Within these requirements, there are three possible ways for a manufacturer to certify that their valve is suitable for use as a Positive shutoff or Category A valve:

Pressure testing. The manufacturer must perform this test by removing all of the resilient material at testing full rated pressure and meet the flow requirements of 46CFR56.20-15 for either Positive shutoff or Category A as desired;

Calculation. Manufacturers may also demonstrate compliance through a method of calculation that is acceptable to Commandant (G-MSE-3) and are not limited to any particular calculation method to support their request for certification but are free to propose a method. For example, one method may be to use liquid capacity test data for valves of one size (with the resilient material removed) from a valve series to develop the flow coefficient for that valve size and then, following principles of dimensional similitude, scale up the flow coefficient for a valve of a different size (with the resilient material removed) within that same valve series. The liquid capacity test data could be obtained by maintaining constant pressure at the inlet side of the valve (with the resilient material removed) while adjusting pressure at the outlet side of the valve, then measuring the flow rate. Having calculated the flow coefficients for other valve sizes within the same valve series from the flow coefficient that was empirically derived from the liquid capacity test data, the flow rates for the other valves in the sizes within that valve series can then be calculated.

Fire testing. If a valve designer elects to use actual fire, Commandant (G-MSE-3) must accept the proposed calculation method or test plan, however the regulations do not specify any particular fire test that must be used. Some fire tests that may be acceptable include American Petroleum Institute (API) standard 607 “Fire Test for Soft Seated Quarter Turn Valves,” 4th Edition; API specification 6FA “Specification for Fire Test Valves”, 2nd Edition; or Factory Mutual Class 7440 that includes a cycling component in a fire test.

However, such tests would require that the valve be pressure tested at a pressure at least equal to the system pressure in which the valve would be utilized. Manufacturers are free to propose other fire tests to Commandant (G-MSE-3) for consideration in lieu of those mentioned above.

3.D. Vessel Inspection Alternatives.

1. References. Vessel inspection alternatives are discussed in Title 46, Code of Federal Regulations, Part 8. Additional information regarding the Alternate Compliance Program (ACP) is contained in the Marine Safety Manual, Volume II, Materiel Inspection, COMDTINST M16000.7 (series), Section B, Chapter 9. Additional information regarding the Streamlined Inspection Program (SIP) is contained in the Marine Safety Manual, Volume II, Materiel Inspection, COMDTINST M16000.7 (series), Section B, Chapter 10.

3.D 2. ACP Supplements. When a classification society applies to the Alternate Compliance Program a comparison is made between the classification society rules and the applicable sections of the CFR. Federal Register pages 7495 through 7499 of Volume 63, 13 February 1998, outlines the Critical Ship Safety Systems regulations that are reviewed in order to draft the supplement. When a classification society rules are used correctly in conjunction with the applicable supplement an equivalent level of safety as that provided by use of the CFR and SOLAS is provided.

Online: Supplements are available online and can be found by going to the Coast Guard homepage: http://www.uscg.mil. Once there, select "Marine Safety", then the "Marine Safety Index". Scroll down and select "G-MSE Office of Design & Engineering Standards". Under the Naval Architecture Division heading, select the "Alternate Compliance Program".

E. Mechanical Systems.

1. Engineering Materials.

a. Program Philosophy.

(1) Introduction. One phrase used throughout the vessel inspection regulations is "the component must be suitable for the intended service." A component's suitability depends upon a number of factors, one being the material from which it is made. In the design of a component, one of the most important considerations is the selection of material. This depends upon the physical shape and size of the component, its operating environment, useful life, and method of fabrication. The designer must match these design constraints to the mechanical and physical properties of the material and its behavior in the operating environment. These material properties are influenced by the chemical composition, the melting process, the method of forming, the method of fabrication, and any subsequent heat treatments. The infinite combination of these factors can make the material selection process very difficult. Fortunately, there are several standard organizations, such as the American Society for Testing and Materials (ASTM), ASME, and ANSI, that help make this selection process easier. The standards produced by these organizations place various constraints on the above factors, thereby ensuring consistent properties within a range for a given material over a period of time and among various producers. This consistency allows predictions to be made about the behavior of the material in various environments, so as to be able to place limitations on its use. For this reason, the Coast Guard usually accepts only materials that comply with one of these recognized standards. Not all standards are accepted. The consistency of the material's properties depends on the type of constraints used and how tightly these constraints are placed on the factors mentioned above. Another consideration is the amount of quality control required to ensure that the requirements have been met. Only standards that place adequate constraints and controls on the factors influencing the material's properties are accepted.

(2) General Acceptance Procedures. In general, the material specifications accepted specify the melting process, chemical

3.E.1.a (2) (cont'd) composition, mechanical requirements, and subsequent heat treatment necessary. These specifications also prescribe certain destructive and nondestructive tests to ensure that the material meets these chemical and mechanical requirements and that the material is free from injurious defects. In addition, a mill or manufacturer's certificate is required by most specifications and by regulations. The majority of the materials accepted are those listed in Sections I, III, or VIII of the ASME Code and ASTM specifications accepted by ASME B31.1.

(3) Fabrication Requirements. It is not enough, however, to know that a designer has selected one of the acceptable materials to ensure satisfactory service. Subsequent fabrication methods (e.g., severe cold work, forging, and welding) used in the manufacture of the component may substantially alter the material's properties. Therefore, to help ensure that these manufacturing operations are not detrimental, the Coast Guard has adopted certain industry standards (e.g., Sections I, III, and VIII of ASME B31.1) and regulations, which place limitations and requirements on these operations. These requirements are not all encompassing, especially for certain products such as valves. In addition, these requirements do not always provide adequate guidelines in the selection of the material for certain service constraints, such as corrosion. However, unless specific requirements prevent the desired application of a material, the Coast Guard does not restrict the designer's selection (i.e., the adequacy of the choice will usually not be addressed).

(4) Headquarters Action. Commandant (G-MSE-3) is responsible for determining which materials are generally acceptable for boilers, pressure vessels, and piping systems and any limitations on their use; providing guidance to the field on the acceptance of other materials that are not generally accepted; and participating on national technical committees to develop material standards that meet USCG requirements for quality control and certification.

(5) Field Technical and Inspection Action. MSC personnel are responsible for determining that the material selected for a component meets Coast Guard requirements and is suitable for its intended purpose. This requires the reviewer to exercise considerable judgment when specific guidelines or standards are not provided. For this reason, the reviewer should become familiar with the basic materials used and their limitations. The reviewer must recognize that the suitability of a material not only depends on how it reacts in a given environment, but also how it reacts to certain fabrication methods and design details. Inspectors must ensure that only approved materials are used, and the fabricator adheres to the approved drawings and applicable standards, such as the ASME Code.

b. Evaluation Of Materials.

(1) Certification. 46 CFR 50.25 requires the certification of material, depending on the product, by the following methods:
(a) A manufacturer or mill certificate;
(b) An affidavit; and
(c) Specific letter and approved plan.

3.E.1.b (1) (cont'd) A manufacturer's or mill certificate is required for such products as plates, castings, forgings, bar stock, bolting, piping and tubing, and standard pipe joining fittings. This certificate is used to verify that the material complies with the basic requirements of a material specification and any supplementary requirements specified on the order. The certificate, as a minimum, shall report for each heat or lot the material specification and grade to which the material complies, along with the chemical analysis, mechanical properties, and any heat treatments to which the material was subjected.

(2) Testing. The material specifications accepted require certain tests to be performed to ensure that the material has the desired properties. These tests depend on the type of product and its expected service. Most material specifications accepted require a chemical analysis and tension test. Other tests that may be required include:

(a) Impact tests for materials used in low temperature service;
(b) Bend tests for plates;
(c) Flattening tests for pipes;
(d) Certain nondestructive tests for castings and welded pipes;
(e) Hardness testing for heat treated materials; and
(f) Certain chemical tests to determine the material's susceptibility to corrosion.

When called out in the basic portion of the material specification, these tests must be performed on all heats of materials produced. It is interesting to note that the only things that may separate one material specification from another are the types of basic tests required (e.g., ASTM A576 and A675).

Most material specifications provide for tests in addition to those required in the basic specification. These supplemental tests may be required by the purchaser to ensure that the material has certain properties required for a specific application (e.g., low or high temperature service). The buyer must purchase a sufficient quantity of material (usually a mill run) to have the mill perform the tests and guarantee that the material will have the desired properties. This is done because the mill may have to use different melting practices, tighter controls on certain elements, etc., to meet the additional test requirements with greater confidence. For this reason, it is difficult to require a manufacturer to purchase material with supplemental test requirements. The reviewer should take this into account prior to making such a request.

(3) ASTM and ASME Specifications. The majority of material standards are developed by the ASTM. The ASTM has thousands of standard specifications in effect. These standards are published in a multi-volume set known as the Book of ASTM Standards. A great many of the ASTM standards are reprinted or specified by various building codes such as the ASME Code, which adopts many of the ASTM standards without changes. However, some ASTM standards are adopted with minor to major changes. These changes usually

3.E.1.b (3) (cont'd) involve the requirement for a material certification, the deletion of certain melting practices, changes in lot size, deletion of certain grades, etc. The ASME material standards are published in Section II of the code. Section II contains three parts: Part A - Ferrous Materials; Part B -Nonferrous Materials; and Part C - Welding Rods, Electrodes, and Filler Metals. Appendix B of Section VIII, Division 1 of the ASME Code outlines the code policy for approval of new materials. To facilitate identification, the material designations used by ASME are similar to those used by ASTM (e.g., ASME SA516 and ASTM A516 are similar materials).

(4) Equivalencies. 46 CFR 50.20-30 and 56.60-1(a)(2) permit materials other than those generally accepted to be used, provided they receive specific approval of the Commandant. This authority has been delegated to the MSC in the course of plan review. The task of determining the suitability of a material for a specific application is difficult. The task of determining the suitability of a material for a specific application material involves comparing the material with one that is generally accepted to get as close a match as possible. The differences are then analyzed for their relative importance to the specific application. If they are considered to be substantial, the material is either rejected or accepted with the provision that the requirements of the generally accepted material are met. The following is a list of some of the items that should be considered:

(a) Chemical requirements;
(b) Mechanical requirements, including location and configuration of the test specimens;
(c) Melting practices;
(d) Heat treatments;
(e) Quality control provisions;
(f) Fabrication processes;
(g) Design margin; and
(h) Directions of principal stresses, especially for plates.

[NOTE: These items are so interrelated that it is impossible to provide specific guidelines for their consideration.]

(5) Foreign Specifications. The majority of foreign material specifications reviewed for equivalency are Japanese Industrial Standards (JIS), British Standards (BS), and Deutsches Institute fur Normung e.v. (DIN). In general, the basic format of these specifications is similar to that of ASTM standards. Other than obvious differences in chemical and mechanical requirements, the reviewer must be careful to note the differences in test specimen size and other quality control provisions; for instance, in JIS 3101, the percent elongation for plates less than 5mm thick is based on a test specimen that has no ASTM equivalent. The JIS specimen with its shorter gauge length (50mm) would measure a higher percent elongation for the same thickness than the 200mm gauge length ASTM specimen. However, the JIS specimen's smaller width (25mm) and, therefore, smaller cross sectional area would measure a smaller percent elongation than the 40mm wide ASTM specimen.

3.E.1 c. High Temperature Service Materials.

(1) Introduction. When selecting materials for elevated temperature service, such factors as creep and stress rupture, fatigue, surface oxidation, structural changes within the material, and corrosion must be considered. Among these, creep and stress rupture represent two of the more important factors. Creep is defined as the time-dependent part of deformation that accompanies the application of a constant load. Usually, it is expressed as a deformation rate (e.g., 1 percent in 100,000 hours). Stress rupture is defined as the stress required to produce fracture in a specified time at a given temperature.

(a) Creep and Stress Rupture Properties. Creep and stress rupture properties are considerably influenced by the metallurgical characteristics of the material and the testing and service environments to which it is exposed. The most important metallurgical characteristics of the material are chemical composition, structure, and grain size, which are primarily controlled by prior processing and heat treatment. Composition is the most important variable. Improvements in creep and stress rupture properties by alloying additions generally may be related either to the amount and size of fine particles that are distributed within the structure of the metal, or to a general strengthening effect of the overall (matrix) structure without the formation of such particles. As a note of caution, the mere addition of alloying elements does not ensure higher creep and stress-to-rupture properties. The effect of grain size on these properties is related to the equicohesive temperature of the material. The equicohesive temperature (usually between 800 and 1000°F for low-alloy steels) is the temperature at which the grain strength is equal to the strength of the material at the grain boundaries. At temperatures above the equicohesive temperature, coarse-grained steels generally exhibit better creep and stress-to-rupture properties than do fine—grained steels. Below the equicohesive temperature, the trend reverses.

(b) Heat Treatments. Heat treatments are important primarily because of their effects on the structure of the metal. Heat treatment and cooling rates will affect the grain size of the material and the distribution of the structural constituents. A normalized and tempered steel is often superior to the same steel in the fully annealed condition. When heat-treated steels are employed at elevated temperatures, it is customary to use a tempering temperature at least 150°F above the expected service temperature. The heat treating temperature and cooling rate are very critical. A change of only a few degrees can cause a considerable difference in the microstructure of the material, which will result in a different resistance to creep. For this reason, the ability of the furnace to maintain a uniform temperature and the method of cooling to ensure a constant rate throughout the material are critical. This becomes more important as the size and thickness of the part increase. The relatively

3.E.1.c(1) (b) (cont'd) conservative safety factors applied on design help to offset these possible differences.

(2) Considerations for Prolonged High—Temperature Exposure. Just as heat treatment affects the microstructure of the material, so does prolonged exposure at high temperatures. When steels are exposed to temperatures above 800°F, some changes may take place in the microstructure. The higher the temperature, the more rapid the rates at which the changes occur. In low-carbon steels that have been normalized or annealed, the carbide gradually changes to the spherical form upon prolonged heating above 900°F. Chromium tends to delay this spheroidization until higher temperatures are reached. Some carbon steels and carbon-molybdenum steels are prone to graphitization when exposed to temperatures over 775°F. Primarily susceptible have been fine-grained aluminum-killed steels. Cast irons are also prone to graphitization. When it occurs in steels, graphite formation has been most pronounced in the heat—affected zones parallel to welds. High concentrations of graphite in these zones have caused severe embrittlement. [NOTE: 46 CFR 56.60-5(d) limits the maximum temperature for these steels to below the lowest graphitization temperature.] Another form of metallurgical instability involving carbon occurs in some types of austenitic stainless steels. When these steels are exposed, during fabrication or in service, to a temperature between 900 and 1500°F the carbon diffuses to the grain boundaries and combines with chromium to form chromium carbide particles. This instability is referred to as intergranular carbide precipitation and it reduces the resistance of the stainless steel to certain corrosive solutions

(3) Applications To Particular Materials.

(a) Steel. Carbon steels generally are not used at temperatures over 775°F. The 1/2% Mo steels are used as tubing in superheaters to about 850°F. The 1-1/4Cr - 1/2Mo steels are used in steam piping and boiler tubes for service up to 950 or 1000°F. The 2 - 1/4Cr - 1Mo grades are used in steam power service to temperatures of about 1060°F. They exhibit slightly better oxidation resistance than the 1- 1/4Cr-1/2Mo grades. The 5Cr - 1/2Mo, 7Cr - 1/2Mo, and 9Cr - 1Mo grades are used where better oxidation and corrosion resistance are required, at temperatures up to 1500°F.

(b) Stainless Steels. Among the martensitic stainless steels, Type 410 alloy is used where good strength is required at temperatures up to about 950°F. Among the ferritic stainless steels, Type 430 is used in heat exchangers, condensers, and special chemical applications. Among the austenitic stainless steels, Type 316 is generally superior to other commercial stainless steel grades and is used at temperatures up to 1050-1200°F. Type 304 exhibits good resistance to atmospheric corrosion and oxidation. Types 309 and 310 exhibit still greater resistance to oxidation because of their higher chromium and nickel contents. Type 310 is particularly preferred where intermittent heating and cooling are encountered since it forms a more adherent scale than

3.E.1.c(3) (b) (cont'd) does Type 309. For high-temperature service, tube materials frequently receive special solution heat treatments to provide a coarse grain size resulting in improved creep strength properties. Stainless materials so heat treated are designated as "H" grades, such as TP321 H. A number of special high—alloy austenitic stainless steel compositions have also been developed for high—temperature service. They generally contain higher nickel compositions than those of the ordinary austenitic stainless steels. These include Incoloy, Incoloy T, and Kromarc-58.

(c) Cast Gray Iron. Ordinary cast irons are limited for elevated temperature applications, due to the breakdown of carbides and growth of the component. This growth is a permanent increase in volume that occurs under certain conditions of heating and cooling; it is independent of stress. It is affected by the presence of superheated steam and certain corrosive fluids. In severe cases of growth, the volume may increase as much as 50 percent, with an attendant loss of strength and development of brittleness. High-alloy cast irons containing 14 percent nickel with additions of copper, chromium, or silicon have been developed; these resist growth and oxidation at temperatures up to 1500°F.

(d) High—Nickel Alloys. The temperature limits for the nickel and the ordinary nickel alloys are approximately 800 to 1000°F. Nickel, Monel (70 percent nickel, 30 percent copper) and numerous copper-nickel alloys (60 to 70 percent copper, 30 to 40 percent nickel) have been developed for valve trim and miscellaneous accessories handling steam.

(e) Copper and Copper Alloys. The use of copper and copper alloys for elevated temperatures is limited to temperatures below the lower recrystallization temperature for the particular alloy. This is the temperature at which cold—worked specimens begin to soften. Brasses containing 70 percent or more copper may be used at temperatures up to 400°F, while those containing only 60 percent of copper should not be used at temperatures over 300°F.

d. Low—Temperature Service Materials.

(1) Introduction. 46 CFR 54.25-10 defines low-temperature service as refrigerated service below 0°F. "Refrigerated service" is defined as service where the temperature is controlled in the process rather than being caused by atmospheric conditions. This temperature limit also applies to piping (see 46 CFR 56.50-105). Unexpected and sudden failures in piping, pressure vessels, and other structures, such as welded steel ships, have made engineers aware that some materials, especially steel, that behave ordinarily in a ductile manner may, under these three certain conditions, exhibit highly brittle characteristics:

(a) High stress concentrations (i.e., notches, internal flaws, or sharp changes in geometry);
(b) A high rate of straining; and
(c) A low ambient temperature.

3.E.1.d (2) Effects Upon Materials. The general effect of decreasing the exposure temperature is to increase the yield and tensile strengths of all structural alloys. However, the allowable stresses for materials used at low temperatures are usually based on room low service temperatures. [NOTE: 46 CFR 54.05-30 provides for an increase in allowable stress values at low temperature in ferrous and nonferrous material.] The effect of low temperatures on the elongation and reduction in area are variable depending on the alloy and testing temperature. The effect on ductility is most pronounced in steels. As the temperature is lowered from some high value, the ductility of steels decreases slowly until a certain temperature is reached. At this temperature the ductility falls off sharply. This continues until another temperature, known as the transition temperature, is obtained. Below this temperature ductility remains constant, or nearly so, as the temperature is lowered. The transition temperature is the temperature above which the steel behaves in a predominantly ductile manner and below which it behaves in a predominantly brittle manner. There is no singular transition temperature except for a particular set of conditions and one criterion of brittleness.

(3) Methods of Testing. Several testing methods have been developed for determining the notch toughness and crack toughness of structural alloys at low temperatures. The most common is the Charpy V-notch impact test (see ASTM A370). Several criteria are used to designate the transition temperature based on the results of a Charpy V-notch test. These are:

(a) The energy level absorbed, usually taken as 15 ft-lb;
(b) The percentage of ductile fracture in the fractured surfaces, usually 50 percent; and
(c) The amount of lateral expansion. Other methods are the precracked Charpy specimens, drop weight tear test specimens, and specimens for determining the nil-ductility transition (NDT) temperatures (see ASTM E208).

These procedures are basically qualitative, in that they can be used to compare one alloy against another. There is no quantitative relationship between the transition temperature and a safe minimum service temperature for a given alloy. Even so, standards based on these methods have been applied with definite success to minimize the occurrence of brittle fracture. A more quantitative type of fracture test is that produced under plane-strain conditions to obtain data on plane-strain stress intensity factors according to principles of fracture mechanics (see ASTM E399). The important factor of these tests is that the critical sizes of cracks and flaws may be estimated for a given service temperature and maximum service stress level based on the results of these crack-toughness tests (KIc values). 46 CFR 54.05 states the requirements for toughness tests of materials used in pressure vessels. This section requires either the Charpy V-notch or drop-weight test.

(4) Applications To Particular Materials.
(a) Steel. Metallurgical factors, such as deoxidation practice, chemical composition, rolling, forging or extruding practice,

3.E.1.d(4) (a) (cont'd) and subsequent heat treatment influence the transition temperature in steel. Under the worst conditions, the transition temperature may be above 100°F; under the best conditions, below -200°F. Fully killed (deoxidized) steels have lower transition temperatures than rimmed or semikilled steels. Such steels are sometimes referred to as being made in accordance with fine-grain melting practice. Carbon influences the transition temperature unfavorably, and is usually limited to 20-25 percent. High ratios of manganese to carbon may be beneficial. Other elements usually raise the transition temperature, with the notable exception of nickel. Steels that have been fully annealed have higher transition temperatures than those that are normalized. Tempering or stress relieving after welding is beneficial to lowering the transition temperature. Optimum properties are obtained by fully quenching and tempering to moderate strength levels. The minimum recommended service temperatures and special requirements for steel are specified in 46 CFR 54.25-10, 54.25-15, 54.25-20, and 56.50-105.

(b) Aluminum Alloys. Fracture toughness of most of the aluminum alloys in the 2000, 5000, and 7000 series is not significantly affected as the temperature is lowered. This, and the fact that the yield and tensile strengths increase as the temperature is lowered, makes these alloys good candidates for low temperature applications. Aluminum alloy 2219-T87 has a good balance of strength, toughness, and weldability. Alloy 5083-H113 is used where toughness and weld ability are of prime importance. For even greater toughness (e.g., for LNG tanks), 5083-0 alloy plate is used.

(c) Copper and Copper Alloys. These alloys tend to increase in strength as the temperature is lowered and retain their ductility. These alloys are generally not used in cryogenic equipment, except for accessories such as tank gauges, but are used extensively in refrigeration and liquefying equipment.

(d) Nickel—Base Alloys. These alloys exhibit increased strength and retain their ductility as the temperature is lowered. Invar, a 36% nickel-63% iron alloy, is used in Gas Transport LNG tanks because of its extremely low coefficient of expansion (0.0000004 per degree Centigrade).

e. Corrosion.

(1) Introduction. One factor that must be considered in the design of equipment is corrosion. This is especially true for equipment used in the marine environment. This subject is quite varied and complex and, therefore, can be discussed only in general terms. For this reason, the Coast Guard has few specific rules concerning corrosion. The basic types of corrosion fall into two categories: corrosion due to direct chemical attack, and corrosion due to electrochemical attack, which requires the presence of an electrolyte; seawater is the most common electrolyte encountered aboard ship. The basic types of corrosion are described below.

3.E.1.e (2) Regulatory Requirements.

(a) 46 CFR 54.01-35 requires pressure vessels to have a corrosion allowance of one-sixth of the required thickness or one-sixteenth of an inch, whichever is less. An exemption from this requirement may be granted if the pressure vessel is adequately protected from corrosion. [NOTE: Paint is not considered to provide adequate protection from corrosion. Also, when determining the corrosion allowance for pressure vessels made from pipe, the mill tolerance on the pipe wall thickness should be considered.]

(b) 46 CFR 56.60-3(a) requires ferrous pipe used for salt water service to be galvanized or be of extra heavy-schedule material.

(c) 46 CFR 56.60-20 cautions against the possibility of galvanic corrosion when using copper and aluminum alloys in conjunction with each other or steel. This section further points out the poor corrosion resistance of aluminum alloys with copper contents exceeding 0.6 percent. This is due to the fact that precipitation of the aluminum-copper constituent at the grain boundaries leaves the adjacent solid solution anodic. These depleted zones, being the most anodic, corrode selectively by an electrochemical process, producing notches or crevices that become stress raisers.

(d) Footnotes 7 and 9 of 46 CFR Table 56.60-2(a) require an ammonia vapor test for certain copper alloys. This test is used for the purpose of detecting the presence of residual (internal) stresses that contribute to stress-corrosion cracking of these materials.

(e) Footnotes to 46 CFR Table 58.50-10(a) prohibit galvanizing the interior of diesel fuel tanks. This is because diesel fuel reacts with the zinc to form a sludge, which can clog the fuel system (this is not true of gasoline).

(3) Galvanic Corrosion. Galvanic corrosion occurs when two dissimilar metals are electrically coupled in the presence of an electrolyte, such as seawater. Current will flow through the electrolyte from the anodic material to the cathodic material, thus causing accelerated corrosion of the anodic material. Marine Engineering, published by the Society of Naval Architects and Marine Engineers (SNAME), contains a listing of metals in seawater, arranged in approximate order from the most anodic in behavior (magnesium alloys) to the most cathodic in behavior (graphitized cast iron).

The suitability of a dissimilar metal couple in practice may depend on the relative areas of the anode and cathode. If the anode is small relative to the cathode, the anode may suffer a rapid rate of deterioration. However, if the cathode is small relative to the anode, the corrosion and average penetration rate of the anode may remain at a tolerable level. It may be possible to reduce corrosion of the anode with paint. However, the paint

3.E.1.e (3) (cont'd) should be applied to the cathode, not the anode. This is because any imperfection in the paint, if applied to the anode, would result in an even more unfavorable cathode/anode area ratio. For the same reason, care should be exercised when applying noble metal coatings on a less noble base metal (e.g. chrome plate on carbon steel). If the coating contains any imperfection, the large cathode to anode area ratio can cause severe corrosion of the base metal in the localized region of the imperfection.

(4) Pitting Corrosion. This form of galvanic corrosion occurs as the result of local cells that develop on the surface of a single material. These cells arise from local environmental differences. Aluminum alloys with heavy metal alloying elements, such as copper, nickel, and iron, are subject to severe pitting. This results from the anodic behavior of the aluminum matrix and the cathodic behavior of the heavy metal alloying elements. Metals that form a protective oxide film, such as the stainless steels, are highly susceptible to pitting. These, more so than carbon steels, pit greatly because any local breakdown of the film exposes a local active area of less noble character.

(5) Intergranular and Selective Phase Corrosion. This type of corrosion is due to heterogeneities in the metal that result in preferential corrosion of one of the components of the alloy. Several examples of this type are:

(a) Intergranular corrosion of austenitic stainless steels as the result of carbide precipitation at the grain boundaries;
(b) Dezincification of brass and bronze containing more than 15 percent zinc; and
(c) Dealuminization of some aluminum bronzes in which the aluminum-rich gamma phase is selectively attacked.

(6) Stress Corrosion. Stress corrosion is a form of local deterioration resulting from the combined action of static stress and corrosion, which leads to cracking of alloys. This corrosion only occurs in the presence of tensile stresses, which may be applied and/or residual. Stress corrosion of a particular material usually occurs only in specific environments, which may be only mildly corrosive in the absence of stress. Steels produced to a yield strength in excess of 150,000 psig are susceptible to stress corrosion in a marine environment. Many aluminum alloys in the 2000 to 7000 series are susceptible to stress corrosion in seawater.

f. Use Of Stainless Steel Materials.

(1) Introduction. Stainless steels develop a thin oxide layer that protects the metal from surface corrosion. The development of this protective film is known as passivating. Some authors define chromium-nickel steel as "stainless" if it contains as little as 10 percent chrome; others regard 11.5 percent chrome as the minimum possible amount for passivating to occur. Chlorides dissolve this passivating film. However, if ample oxygen is available, the oxide film restores itself as fast as it is broken down, and the surface remains protected. At any location where

3.E.1.f (1) (cont'd) oxygen is kept out, deep pitting may occur because the chlorides destroy the passive film and the spot becomes active. Active and passive spots on the same piece of stainless steel can be so galvanically different as to cause rapid deep pitting. Once a pit starts, it serves as an active spot where the chloride reaction products themselves keep the oxygen out and corrosion can continue. Stainless steel parts in stagnant saline water, located in such places as low points in piping where water accumulates or fuel tanks in bilges of small boats, may be subject to this type of concentrated and rapid pitting attack. Even when the surfaces are exposed to ample oxygen, crevices may become stagnant or fouled areas and, therefore, active pits may develop. Susceptibility to chloride action can be greatly reduced (although not totally eliminated) in several ways:

(a) By increasing the chromium content to 25 percent and the nickel content to 20 percent, rather than the common 18 percent and 8 percent mixes;

(b) By the addition of 2-3 percent molybdenum (316 and 316L);

(c) By decreasing the carbon content (304, 304L, 316L);

(d) By selecting chromium and nickel equivalents to keep more austenite and less ferrite in the metal. For equivalents and percentage of ferrites, see the Schaeffler diagram, Figure 65.5, of the AWS Welding Handbook, Volume 4 (6th ed.). However, some of the desirable corrosion-resisting additives also promote ferrite formation; or

(e) By avoiding sulfur and selenium, which are sometimes added to enhance free—machining properties.

(2) Extra—Chloride Corrosive Effects. In addition to pitting at any random point in the material as described above, pitting in the grain boundaries, intergranular corrosion, and stress corrosion cracking can occur. The same chloride attack is contributory, but these types of corrosion occur in the grain boundaries due to a depletion of chrome or a buildup of carbon, thus negating the benefits indicated in items (2) and (3) above. This effect can be reduced by:

(a) Not allowing the material to remain any longer than necessary at temperatures between 350 and 927°C (662-1700°F), or, if this has already occurred, by heat treating the material above 1010°C (1850°F) and quickly cooling. (See UHA-100 through 108 of Section VIII, Division 1 of the ASME Code.)

(b) Avoiding the edges of as-rolled plate. Rolling orients the grains in such a way that those grain boundaries perpendicular to the edge corrode more rapidly. Pit nuclei, therefore, exist at the edges of sheets, and fresh-cut edges are less likely to have active pits already started.

(c) Avoiding cold-working and hot-working. Such areas are likely to have intergranular problems somewhere within or adjacent

3.E.1.f(2) (c) (cont'd) to the affected area, unless the cold or hot-working is followed by heat treating as in (1) above.

(d) Adding titanium or columbium. For this purpose, there should be four to six times as much titanium, or eight to ten times as much columbium, as carbon. In welding electrodes, columbium is preferable to titanium.

(3) Consideration In The Use Of Stainless Steels.

(a) Introduction. From the above discussion, it is clear that stainless steel is not always "stainless" and should not always be considered a suitable substitute for carbon steel. For this reason, the reader is cautioned that the term "steel," when used in the regulations, may not include "stainless steel." For example, 46 CFR Table 58.50-5 lists "steel" as an acceptable material for independent fuel tanks. However, Note 4 requires that the "steel" be galvanized. Thus, "stainless steel" is not included in the general term "steel," and its use must be specifically approved. Although one specific material such as properly heat treated 316L is likely to be clearly best, the Coast Guard often must decide whether something less than the best is acceptable or unacceptable in a particular application.

(b) Certification by a Metallurgist. Engineers will differ as to where to draw the line between acceptable and unacceptable. If a material manufacturer's metallurgist, who is familiar with marine applications, certifies that the proposed material, design, welding, heat treatment and other pertinent details are an acceptable combination in the proposed location and service, this will generally be acceptable. A greater degree of documentation or testing may be required in new applications in vital or hazardous services. A lesser degree of information will often be acceptable in many routine applications.

(c) Restrictions in "Freshwater" Service. The pitting problem should not be disregarded for non—ocean service. Chloride ions exist in sufficient quantity to pit some stainless steels in many waters normally regarded as "fresh." Natural minerals, road salt runoff, industrial and agricultural pollutants, and brackish water in estuaries can all contribute chlorides in sufficient quantities to cause active pitting in the absence of ample oxygen for passivating. Also, evaporation will increase the chloride concentrations in bilges, crevices, and similar locations. Stainless steels should, therefore, generally not be accepted in stagnant water services, such as boat tanks located in bilges and other wet, unventilated areas. In dry, well-ventilated areas (such as the upper levels of engine rooms), the better marine alloys may be used without coatings and with reasonable control of crevices and cleanliness.

(d) Restrictions In Deck Equipment. On deck, the better marine alloys may be used without coatings, but with every effort to minimize crevices. Inspectors should be aware that such

3.E.1.f(3)

(d) (cont'd) items as LNG piping (which is generally made from such materials as 304L stainless steel, for other reasons) should be carefully examined for crevice corrosion around gaskets, at the edges of insulation where imperfect sealing may allow salt to collect, etc. [NOTE: Listing of an alloy in 46 CFR 56.50-105 as "acceptable for cryogenic piping" does not imply that it is acceptable in all locations aboard ship.]

(e) Restrictions Against Coatings. Coatings, which have been accepted for stainless steel boat fuel tanks under a previous policy, are a less desirable solution. Slight damage to coatings, such as peeling, cracking, etc., can concentrate pitting at the point of damage. Coatings may hide perforations of the metal due to internal pitting, which may occur when saline water gets into fuel tanks, until fire damage to the coating reveals that the supposedly fire-resistant stainless steel has been holed. In most cases, the use of stainless steels should be accepted without coating or prohibited. Only in special cases, as when a boat with existing stainless fuel tanks comes into inspected service, should acceptance of a coating be considered; acceptance in such cases should be limited to tanks that can be readily inspected inside and out.

(f) Use In Vessel Tanks. Because chloride pitting can completely hole a thin tank between required Coast Guard inspections, stainless steel tanks should be required to be no thinner than carbon steel tanks, in accordance with the tables in 46 CFR 58.50, and 182.440(A)(1), if permitted at all.

(g) Summary. All of the information above concerns normal and low temperature service. Chloride pitting becomes more severe very rapidly at high temperatures. In some alloys, this transition may occur at as low as 125°F. Different alloys may be better for hot, fast-flowing saltwater service such as cooling water discharges. Such special applications must be considered individually. The sources cited below do not show any actual data for corrosion at cryogenic temperatures, but the corrosion rate curves available seem quite flat throughout the ambient temperature ranges. Therefore, corrosion is likely to be the same or lower at very low temperatures, and should be evaluated at ambient temperatures unless data showing a significant reduction is submitted.

(4) Additional Information. Further information may be obtained through the following sources:

(a) Marine Corrosion: Causes And Prevention, Francis L. LaQue; Wiley, New York, 1975.

(b) The Corrosion Handbook, H.H. Uhlig, Ed.; Wiley, New York, 1948.

(c) Corrosion (2nd Ed.), Volumes 1 and 2, L. Shreir, Ed.; Newnes— Butterworths, London, 1976.

3.E.1.f(4) (d) Corrosion And Its Prevention In Waters, G. Butler and H.C.K. Ison; Reinhold, New York, 1966.

(e) UL Assignments 65WW32 & 65WW63, "Environmental Exposure Of Sample Model Marine Fuel Tanks," Files MM—36 & MM—10, Final Report Yacht Safety Bureau (YSB) R6—l—0469.

2. Boilers, Pressure Vessels, And Similar Equipment.

a. General Provisions.

(1) Introduction. Throughout the regulations concerning Coast Guard certificated vessels, it is common practice to refer to the Marine Engineering Regulations (46 CFR, Subchapter F) for general requirements for pressure vessels, boilers, thermal fluid heaters (TFHs), and similar equipment. It should be recognized, however, that some special types of pressure containing equipment, such as hazardous cargo tanks, pressure vessels for human occupancy (PVHO's), etc. are partially or completely outside the scope of Subchapter F. Requirements consist basically of industry safety codes and standards, with the bulk of the regulations addressing changes or modifications to bring these requirements in line with good marine practice. Because of our adoption of industry codes and standards, our committee participation is quite meaningful. Equipment repairs should meet requirements comparable to those for new equipment. Unless equipment is accepted as part of an existing ship being brought under Coast Guard certification for the first time, the regulations do not presently provide for acceptance of existing equipment. The provisions of 46 CFR 50.05-5 regarding existing boilers, pressure vessels, or piping systems apply only to equipment that was accepted by the Coast Guard when new, but which has deteriorated in service or has been out of service for some time.

(2) Approval Process. All boilers and TFHs are reviewed by the Marine Safety Center (MSC), with copies of the reviewed plans sent to the cognizant OCMI. The ASME stamp has been adopted for power and heating boilers in lieu of the Coast Guard plan approval and shop inspection that occurred prior to final rules issued on 8 March 1985. The final rules also require safety valves used on boilers to meet the ASME Code, and eliminate the requirement that they be Coast Guard approved. These regulations apply to propulsion boilers, auxiliary boilers, fired thermal fluid heaters, exhaust gas boilers, heating boilers, hot water supply boilers, and certain unfired steam boilers.

(3) Functions Of Boilers. A boiler is a unit that produces steam or high-temperature water for use external to itself. Steam boilers always produce a phase change by heating. Evaporators differ from unfired steam boilers in that they generate steam for distillation purposes. Unfired steam boilers produce steam from an external heat source (such as engine exhaust) to supply steam for some function such as heating, doing work, or removing water from oil. Hot water supply boilers supply water that is not returned to the boiler or otherwise retained. Hot water heating boilers usually produce hot water to use in a heating operation,

3.E.2.a (3) (cont'd) after which the water is normally returned to the boiler. Not fully understanding these differences has resulted in misapplication of regulations in the past.

(4) Historical Development. Although boilers have been used in marine industry for a long time, developments in marine boiler technology have evolved slowly. Early boilers resembled large teakettles. Need for reduced boiler size, increased efficiency, and improved safety, along with related developments in technology, have resulted in significant changes in design. These developments include:

(a) Introduction of welded construction;
(b) Development of safety valves and fusible plugs;
(c) Watertube designs;
(d) Enhancement of materials;
(e) Increases in design pressures and temperatures;
(f) Conversion to fuels other than coal;
(g) Use of single-wall construction;
(h) Improvements in burners and control systems; and
(i) Addition of features such as superheaters and economizers.

Reference should be made to 46 CFR Table 54.01-5(a) for applicability of regulations for various types of equipment. Boilers are divided into main and auxiliary boilers. Boilers whose primary function is to deliver steam for propulsion purposes are designated as "main" or "propulsion" boilers; all other boilers are auxiliary boilers, which may be either fired or unfired. The requirements for miniature boilers and organic fluid vaporizer generators should be noted in 46 CFR 52.25. These boilers are not widely used aboard ships, and are, therefore, not discussed further.

(5) Pressure Vessels. Pressure vessels are merely leak-proof containers for pressurized fluids. They vary in characteristics, from a simple component in a piping system to more sophisticated construction for extremes of pressure, temperature, or exacting performance requirements. [NOTE: Some fluid conditioner fittings are reviewed as pressure vessels (see 46 CFR 56.15-5]. In light of this, one should realize how difficult it is to develop general design requirements suitable for all applications. Because of the amount of energy stored in pressure vessels, preventing failure becomes a primary concern in design. Although failure may result from several causes that which first comes to mind is overstress of the material.

(6) Control of Stresses. Stresses in boilers and pressure vessels are maintained at an acceptable level by preventing overloading (as a result of overpressure, external loads, etc.); preventing reduction in load carrying cross section (as a result of corrosion, fatigue cracks, etc.); by avoiding "weak link" construction details; and by properly selecting materials. Materials, for example, must have suitable plastic as well as ductile properties so that local yielding can redistribute stresses to prevent failures that would occur in purely elastic materials. There is no perfect pressure vessel material for all applications and environments. Most pressure vessels are

3.E.2.a (6) (cont'd) designed with a "design margin" or "factor of safety" approach. However, as more is learned about design and material parameters, engineering and economic considerations will lead to increased use of refined analytical and experimental design procedures. Coast Guard engineers must keep abreast of factors affecting pressure vessel design, since they will be increasingly called upon to evaluate designs that more fully use material properties and advanced design methods.

b. Propulsion Boilers.

(1) Introduction. The importance of reliability in vessel propulsion becomes obvious as one considers the consequences of losing the main propulsion plant. The design effort devoted to reliability has been receiving increased emphasis in recent years due to growing complexity of equipment and the trend toward reduced manning. The cost of taking ships out of service for repairs has also increased the attention given to designing for reliability and maintainability. Although many operators consider two boilers necessary to ensure propulsion for the vessel in case one boiler is lost, the Coast Guard does not prohibit single boiler installations.

(2) General Requirements. Certain characteristics are important in marine boilers. It is desirable to keep the size of these components to a minimum to maximize availability of vessel cargo space. The center of gravity should be low to increase vessel stability. Boiler drums should be arranged fore-and-aft to minimize sloshing and water level control problems. Foundations must be designed to withstand loads from ship motions. Access must be carefully provided for inspections and repairs. Combustion controls must be suitable for shipboard service, which makes components such as mercury switches unacceptable. Special piping requirements help provide reliable supplies of fuel and water. Manning and automation requirements for boiler installations are geared to the increased attention required by boilers, as opposed to diesel installations. Marine boilers are designed for more potentially harmful vibration and shock loading than are shore-based boilers. These examples give some feel for special considerations relating to marine boilers and, when coupled with failure consequences typically more serious than for land-based boilers, point to the need for particular interest in reliability and safety.

(3) Main Boiler Safety Valves. The design, sizing, setting, and repair of main boiler safety valves are extremely important. The required safety valve capacities are based on the boiler overload ratings determined during design of the boilers. Re-heaters, air heaters, economizers, boiler design characteristics, and type of fuel affect these capacities. ASME does not certify or approve safety valves. When requested by ASME, the National Board of Boiler and Pressure Vessel Inspectors (NB) will survey a manufacturer's facility, valve designs, quality control systems, and flow test facility to establish valve capacity in accordance with the ASME Code. Capacity test data for each valve model, type, and size signed by the manufacturer and an authorized observer is submitted to the NB for certification. Certificates

3.E.2.b (3) (cont'd) must be renewed every 3 years. Valves certified by the NB are published in "Relieving Capacities of Safety Valves and Relief Valves Approved by the National Board," which includes relieving capacity data. Many considerations affect selection of safety valve set pressures and blowdowns. Improperly set valves can result in overpressure or overheating of the boiler, simmer, chatter, rapid cycling, frequent operation, or deterioration of the safety valves. Parts 67-73, Section I of the ASME Code contain a wealth of information on safety valves, some of which Coast Guard inspectors should know. For example, for service over 250 psig the tolerance on setting a valve is +/- 5 percent of the pressure marking on the valve. The setting of superheater safety valves may depend upon the pilot valve setting, the design pressure of the superheater, or the design pressure of the main steam piping.

Safety valves are repaired under the provisions of 46 CFR 59.01-5. Due to a previous history of unsatisfactory repairs, Repair Of Boiler Safety Valves", COMDTPUB P16700.4, NVIC 1-71, was written to set forth procedures by which the Coast Guard can accept repaired valves as equivalent in performance to that of a new valve (see below concerning the National Board).

(4) Superheaters. Of particular concern in the approval and inspection of boilers are the steam and tube metal temperatures of superheaters. Depending on the design and arrangement of superheater tubes and headers, steam temperatures in some parts of the superheater can be substantially higher than those in the superheater outlet. Tube metal temperatures also vary throughout the superheater. Highly sophisticated techniques of analysis and much experience go into predicting what these temperatures will be; these temperatures rarely turn out exactly as predicted, due to all the variables involved. For this reason, it is normal practice to outfit the first boiler in a class of vessels with thermocouple temperature monitoring systems. It is important to know what these temperatures actually are, because at high temperatures, temperature increases can result in tremendous loss of strength in the metal. Temperature increases of 250°F may result in reductions in material allowable stress of 25 percent or more, depending on the actual temperature and material. Concern for this delicate balance between temperature and allowable stress does not end with the boiler. The main steam piping from the boiler must be similarly designed for the high steam temperature. This is done by selecting appropriate allowable stress values to maintain required safety factors for pressure containment in keeping thermal expansion stresses at an acceptable level. This points to the importance of the requirement in 46 CFR 52.01-95(b)(2) for visible and audible alarms to indicate excessive superheat. All boilers with integral superheaters are approved for a maximum allowable superheater outlet temperature. For protection of both the superheater and the main steam piping, the alarm setting should not exceed this approved temperature. Recently, boiler fuel rates have become an important consideration, resulting in a trend to operate very close to the maximum allowable temperature to improve efficiency.

3.E.2.b (5) References. See 46 CFR Part 62 for information on main boiler controls, alarms and shutdowns, and how requirements for these features relate to levels of vessel manning. Additionally, see below for information on propulsion system automation.

c. Auxiliary Boilers.

(1) General. Auxiliary boilers include those shipboard units that are not used for propulsion. The high pressures and temperatures desirable for use with steam turbines make watertube boilers favored for main boilers. Auxiliary boilers, however, are supplied in quite a variety of forms, including both water and firetube types, for quite a variety of applications. These units are categorized in 46 CFR Table 54.01-5(a) as fired steam boilers, hot water heating boilers, hot water supply boilers, an unfired steam or hot water boilers (see table for applicable regulations). Except for some unfired boilers and some small electric water heaters, these units are designed, fabricated, and tested in accordance with Section I or IV of the ASME Boiler and Pressure Vessel Code, as modified by 46 CFR Parts 52-53 for Coast Guard purposes. Boilers that are not exempt from the requirements of 46 CFR Parts 52-53 must be equipped with appropriate safety valves. These valves will have quality construction, certified capacities, provision for sealing after setting the pressure, and other features required by the Coast Guard. The valves are not usually pilot-actuated on auxiliary boilers. Features and operating characteristics of boiler safety valves differ significantly from those of ordinary pressure relief valves.

(2) Fusible Plugs. Fusible plugs are also required on all boilers except watertube boilers and heating boilers operating at 30 psig or less (see 46 CFR 52.01-50). Although these plugs may relieve some pressure and provide some cooling of furnace temperature, their main purpose is to provide warning for the operator in case of extremely abnormal operation. The plugs are particularly important for a hand-fired or solid fuel boiler. Plugs are cleaned and inspected regularly to prevent unintentional failures. Low water is the usual cause of fusible plug failures, but excessive scale on the plug or adjacent metal can also melt the plug. How useful a fusible plug is in limiting furnace temperatures depends on the individual design of the boiler and controls, the plug locations, and the amount of forced draft.

(3) Relative Effects of Fuel Consumption. Fired auxiliary boilers include boilers fired by either oil or electricity. Generally, the specific requirements of 46 CFR 52 or 53 apply to these boilers, with appropriate requirements for automatically controlled boilers taken from 46 CFR 63.05 or 63.10. Control system requirements vary depending on the heat input rating, with more detailed provisions occurring for units with a heat input rate over 117 kW.

(4) Automatic Control Systems. Automatic control systems for auxiliary boilers will be reviewed by the MSC. Although approvals are issued on an individual vessel basis, standard design files

3.E.2.c (4) (cont'd) should be maintained to reduce redundant reviews. It should be noted that although nearly all auxiliary boilers are automatically controlled, the Coast Guard does not require them to be automatic. Boilers that do not meet all the requirements in 46 CFR Part 63 should be required to have a qualified operator, responsible for the operation of that boiler, present whenever the boiler is in operation.

[NOTE: This may impact on the manning requirements for the vessel aboard which the boiler is installed.]

(5) UL listings. Certain electrically fired hot water supply boilers (water heaters) may be accepted on the basis of listing by UL (see 46 CFR 53.01-10(c)). The scope of UL 174 has been substantially reduced since this regulation was written, so that it now applies only to household-type water heaters. UL has developed a new standard for commercial type heaters, UL 1453, that has been evaluated and adopted by the Coast Guard. [NOTE: the requirements found in 46 CFR 63.25-3 for water heaters not covered by UL 174 are intended to prevent water in any part of the storage tank from flashing to steam at atmospheric pressure. Some lack of clarity presently exists between the 46 CFR Part 53 and Part 63 requirements for relief of pressure for water heaters up 100 psig. What should be provided is either an approved safety valve and a temperature relief device or a pressure-temperature relief valve meeting ANSI Z21.22.]

d. Unfired Boilers. Because of an increased interest in energy conservation, increased numbers of waste heat boilers are being built for marine applications. Most of these units are exhaust gas types designed to recover usable heat that would otherwise be lost. The controls for these boilers are usually very simple; the generated steam can be used directly for heating or doing work, or routed to the drum of a fired auxiliary boiler aboard the vessel to supplement its capacity. When two boilers are connected in this manner, the system must be reviewed to ensure that adequate total safety valve capacity is provided and to verify that one boiler cannot be a source of overpressure for the other. The controls on the fired boiler must be sufficiently flexible for operation with or without input from the unfired unit. If the waste heat boiler is capable of being run dry, as most can (either intentionally or unintentionally), the boiler must be designed for the highest possible exhaust gas temperature, not the saturated steam temperature. Also, since most waste heat boilers are relatively low-pressure, low-temperature units, the consequences of failure are sometimes underestimated. Often, they are installed directly over the main source of power for propelling the vessel. In these cases, unless suitable warnings, alarms, or baffles are provided, a significant boiler leak (or a small leak over an extended time when the vessel is not underway) could result in loss of propulsion before anyone is aware of the leak. Such precautions are normally required where the exhaust gas temperature can exceed 800°F and plain carbon steel tubes are used. This is because the steel may deteriorate at higher temperatures due to the carbide phase of the steel being converted to graphite. This same problem may occur in carbon-molybdenum steel above 875°F.

e. ASME Code, Sections I And IV.

3.E.2.e (1) Introduction. The Coast Guard has, in 46 CFR 52-53, adopted Sections I and IV as the governing standards for design, construction, and testing of power, auxiliary, and heating boilers subject to Coast Guard inspection. These standards also apply to repairs made to new boilers. Prior to 1968, most of the requirements for boilers were actually contained within 46 CFR 52-53. However, welding requirements were in Part 56, testing in Part 61, and materials in Part 51. This made it extremely difficult to follow the requirements for new construction. The regulations now basically adopt the ASME Code, but do change or modify the code sections in some areas. For example, some piping areas covered in Section I have been replaced with the requirements of 46 CFR 56, to maintain consistency with other piping requirements of the Coast Guard.

(2) Applicability. The ASME Boiler and Pressure Vessel Code is recognized and accepted throughout the world. Worldwide use of this standard has become even more prevalent with the issuance of ASME Code symbol stamps to foreign manufacturers. [NOTE: The code is applicable to new construction only.] The rules are intended to provide minimum requirements for safety and serviceability. A designer must realize this and design for an intended service, while at the same time satisfying the minimum rules of the code. A boiler or pressure vessel designer can fully comply with code requirements, for example, without selecting materials appropriate for the intended service. A boiler must be designed for loads due to ship's motions, thermal conditions, etc., although the code provides no formulas for such loads.

(3) Historical Basis. The basic principles of design are shared between Sections I, IV and VIII of the code and will be discussed more fully later in this manual. The differences in applicability and details, however, are significant and must be fully understood by users. Section I, Power Boilers, was developed because of a rash of boiler explosions that occurred in the late 1800's and early 1900's. A catastrophic boiler explosion in a Brockton, Massachusetts, shoe factory that killed 58 persons, injured 117 others, and caused tremendous property damage resulted in the Commonwealth of Massachusetts enacting construction rules for boilers in 1907; the State of Ohio issued similar rules in 1908. ASME first published Section I, Power Boilers, in 1914. Due mostly to the development and adoption of these rules, failures of boiler pressure boundaries are practically nonexistent today. Section IV, Low Pressure Heating Boilers, was published in 1923. Section II, Materials, was published in 1925. Section VIII, Pressure Vessels, was published in 1925. Section IX, Welding Qualifications, was published in 1937. Section VIII, Division 2, Pressure Vessels, was published in 1968. The Coast Guard routinely works with these code sections, which are continually revised and updated. Coast Guard participation on code committees is an important aspect of the regulatory process.

(4) Summary. The prefaces of Sections I and IV contain important information regarding the scope of applicability of the sections.

3.E.2.e (4) (cont'd) It is important to know how the Coast Guard may adopt or modify these provisions. When are superheaters, economizers, or unfired steam generators designed in accordance with Section I, and when must they meet the requirements of Section VIII? Must a 25 psig heating boiler meet Section I or Section IV? Which steam piping must meet Section I, and which piping must meet 46 CFR 56? The answers to questions such as these must be clearly understood by Coast Guard marine safety personnel.

f. Thermal Fluid Heaters (TFHs).

(1) Introduction. TFHs are being used increasingly in marine applications, both in this country and overseas. Although these heaters may be either fired or unfired, fired heaters are by far the most common. There are many possible applications for thermal fluid heaters for heating, heat recovery, or cooling. These units may be used to maintain the temperature of heavy fuel, preheat lube oil or cooling water, space heating, unfired steam generation, tank washing heat exchangers, cargo pipe tracing, and other applications. The most common application with which Coast Guard personnel are involved is the heating of petroleum products or other chemicals carried as cargo on ships or barges. Many of these cargoes must be heated to maintain pumpability. Fires in connection with TFHs are a very real potential hazard. Most heat transfer fluids are combustible and are, of course, heated during TFH operation. Fuel is being pumped to the burners. Flames, hot surfaces, and electrical sources of ignition may all be present. Therefore, one should not underestimate the potential hazard of these units just because associated pressures may be low and steam is not being generated. It is recommended that special attention be given during inspections to operational testing and visual checks of piping, pipe connections, and mountings. Operating manuals approved for fired TFHs should include a detailed test procedure for controls, alarms, and shutdowns.

(2) Adherence to 46 CFR Parts 52 and 63. Table 54.01-5(a) shows that the requirements of 46 CFR 52 and 63 are applicable. Essentially, this is saying the heater will be constructed per ASME Code, Section I, and have controls, alarms, and shutdowns similar to those required for auxiliary boilers. In fired TFHs, forced circulation with a continuous positive control of fluid in each heating coil or tube is very important. In a "firetube" type of heater, it would not be possible to adequately control fluid velocity throughout the heater. The usual watertube boiler type design also inadequately controls heat flux rates throughout a fired TFH. The most popular shipboard design today employs a limited number of watertube coils to control circulation (sometimes only one coil is used). The smaller units may use only radiant heating, with larger units also having a convective section. Fluid velocities that are too low will result in high film temperatures and decomposition of the fluid. No phase change in the fluid should occur in a TFH, or upon leakage from the system. The coil design usually will not accommodate the installation of soot blowers, making manual cleaning necessary while the heaters are shut down. Expansion tanks should be mounted high enough in the system to provide a positive head to

3.E.2.f (2) (cont'd) prevent the ingress of cargo or other heated liquid if a tank coil or heat exchanger should fail. These tanks are left uninsulated to avoid heat buildup and fluid oxidation.

(3) Requirements for Fired TFHs. Fired TFHs must not be installed in hazardous locations. Heater fuel systems must comply with 46 CFR 56 requirements for fuel piping. Hot surfaces must be insulated as required by 46 CFR 56.50-1(k) to prevent injury to personnel. Relief valves must be installed to protect the heater in event of clogging or inadvertent valve closure. These valves normally relieve to the expansion tank. In the past, the Coast Guard has considered the flash point of the heat transfer fluid to be the practical safe limit of operating temperature for TFHs, and the high temperature cut-off settings are approved accordingly. A leak into a space is considered less hazardous in the form of a combustible liquid than as a potentially explosive cloud of vapor.

Simple heaters with non-corrosive fluids generally warrant less attention during operation and less maintenance on the heater proper than do steam units. However, the controls, alarms, and shutdowns should be regularly tested and maintained. Controls, alarms, and shutdowns for fired TFHs are similar to those required for boilers. Burner control can be on/off, high/low/off, or fully modulating, depending on type of fuel and heater size. Burner sequences are controlled by a timer, which is programmed to check the operation of controls and safety devices while monitoring the flame by photo-electric or ultraviolet sensing. Fluid temperatures are usually controlled by thermostats, with sensing elements typically installed at the inlet header and the outlet of each coil. Fluid flow, fluid level, and temperature measuring devices automatically shut down the burner under abnormal conditions. Requirements for controls and shutdowns are detailed in 46 CFR 63.

(4) Use of Heat Transfer Fluids. Most of the heat transfer fluids used today are mineral oils or synthetic hydrocarbons. Isomers and diphenyl-diphenyl oxide are also occasionally used. Other types of fluids are available for special applications. What makes these fluids better than steam for heating purposes? First, the economy and safety of a low pressure system can be realized, since the temperature is not pressure-dependent as in the case of steam. Lower pressure also decreases leakage potential and the possibility of contaminating the product being heated. Many chemicals that would react strongly with water are more compatible with heat transfer fluids. Thermal fluids may be pumped at low temperatures, and have no condensate return lines to freeze. Feed water treatment is eliminated. Internal scaling and corrosion are greatly reduced. These fluids do not form a vacuum in the system after shutdown, which would tend to contaminate the fluid. Despite these features, there are some problems with heat transfer fluids that should be understood:

(a) The fluids are combustible, requiring equipment and procedures to minimize fire risk. They also constitute a potential water pollutant.

3.E.2.f(4)

(b) The fluids may oxidize when exposed to air. Sensitive temperature control is required to prevent boiling, coking, scaling, or fluid deterioration due to high fluid film temperatures in the heater.

(c) Deterioration in service can result in lowering of the flash point and increase in carbon residue.

(d) The fluid should be handled cautiously since exposure to skin, eyes, lungs, or the digestive system can be irritating or cause illness.

(e) Heat transfer fluids have a lower coefficient of heat transfer on the inside tube surface than does steam, necessitating higher operating temperatures or more surface area for the same performance. Fluid circulating pumps can be high maintenance items.

(f) Also, although there are some offsetting factors in the cost of these fluids, they are expensive.

Work is being done to develop water-based heat transfer fluids to reduce costs. Water has some advantages over oil in that it has excellent heat transfer properties, low viscosity, low vapor pressure, high thermal conductivity, and high specific heat and density. It is not combustible or toxic. Additives are being developed to reduce its limitations regarding operating temperature, corrosion, freezing, etc. This use of water is promising but has had little success so far. [NOTE: The preceding discussion is intended as an introduction to TFHs used in marine applications. Large heaters found in the chemical processing industry are normally much more sophisticated in design.]

g. Pressure Vessels.

(1) General Requirements.

(a) Historical Basis. In the early 20th Century, materials and technology were such that pressure vessels were limited to a capacity of a few hundred pounds per square inch (psi) pressure. Even at that, explosions of such equipment were not uncommon. A real need was realized for the development of materials, design and fabrication methods, protective devices, and quality control procedures. Cities, states, and other jurisdictions began development of design, construction, and inspection rules to help prevent pressure vessel failures. As these rules were enforced, it became more and more difficult to construct a pressure vessel in one jurisdiction that would be accepted in another, due to conflicts in the applicable rules. Because of this lack of uniformity, the ASME Pressure Vessel Code was developed in 1925. This was an attempt to offer the various jurisdictions a standard set of design and construction rules for safe pressure vessels. Much progress has occurred since that time. Pressure vessels are now being built for service at pressures of several thousand psig and equally severe

3.E.2.g(1) (a) (cont'd) temperatures. The Code is continuously updated by the ASME Boiler and Pressure Vessel Committee to keep up with growth in the pressure vessel industry.

(b) Coast Guard Adoption of the ASME Code. On 1 July 1969, the Coast Guard adopted the ASME Code for pressure vessels under its jurisdiction. Section VIII, Division 1 is adopted for most, but not all, pressure vessels aboard Coast Guard certificated vessels. 46 CFR 54 adopts the code, while modifying some of its provisions to conform more appropriately to marine practice. Therefore, a comprehensive understanding of pressure vessel requirements can only be achieved by reading the ASME Code, along with the modifications from Part 54. The code applies to many types of welded and forged pressure vessels. However, there are many pressure vessels outside the scope of the code, as adopted, that must be reviewed on an individual basis. These include non-metallic vessels, wire-wound vessels, multi-layer vessels with shrink-fitted shells, vessels with design pressures in excess of 3000 psig, etc. These types of pressure vessels are normally submitted to Commandant (G-MSE-3) for review. There have been few marine applications of these vessels to date; however, the use of very high-pressure accumulators for hydropneumatic service is becoming more common.

(c) Exemptions From Compliance. 46 CFR Part 54 exempts certain categories of pressure vessels from plan review and shop inspection for various reasons. Some exemptions are conditional on the presence of the "U" or "UN" code symbol. The "U" stamp signifies that the pressure vessel complies with the applicable design, fabrication, and testing requirements of the code, and has been inspected by an authorized inspector. The "UN" stamp indicates code compliance, except that the independent third party inspection is not required (see paragraph U-1 of Section VIII, Division 1 for applicability of the "UM" stamp). The presence of a code stamp is not required to be on pressure vessels that must receive Coast Guard plan approval and shop inspection. The Coast Guard issued Final Rules, effective 21 June 1982, that require Class I, II, and III pressure vessels not containing hazardous materials to be inspected and stamped in accordance with the ASME Code. These rules replace previous requirements for plan approval and shop inspection by the Coast Guard. These rules require:

i. Certification of pressure vessel design drawings and analyses by a registered professional engineer (under 54.01-5(e));

ii. Coast Guard inspection of the completed pressure vessels prior to installation, 54.10-3(c); and

iii. Compliance with certain requirements which are optional under the ASME Code (see 54.01-5(d)).

3.E.2.g(1) (d) Revisions of the ASME Code. The Boiler and Pressure Vessel Committee meets regularly to consider proposed additions and revisions to the code and to formulate code cases. Proposed changes are published in ASME's magazine Mechanical Engineering for public comment from all interested persons. After the allotted time for public review and final acceptance by the ASME Council, the Addenda (which include the additions and revisions to individual sections of the code) are published twice a year. These addenda are accepted by the Coast Guard for new construction 6 months after their date of issue. Code cases do not revise the code. They are issued to clarify the intent of existing requirements or provide, when the need is urgent, rules for materials or construction not covered by existing Code rules. Code cases are published in two separate books, Boilers and Pressure Vessels and Nuclear Components. Code cases are not adopted by the Coast Guard unless specifically authorized by the Commandant.

(e) Coast Guard Modifications of the ASME Code.

i. One of the Coast Guard modifications to the code is the division of pressure vessels into various classes such as Class I, Class II-L, etc. These categories are used in defining exemptions from Coast Guard requirements, or in specifying additional requirements, such as for welded joints, nondestructive testing, or heat treatment (see 46 CFR Table 54.01-5(b)). These additional requirements provide for specific marine service and, in general, represent owner-option alternatives under the code. The jurisdiction of the code with regard to external piping ends at the first circumferential joint in welded end connections, the face of the first flange in bolted-flange connections, and the first threaded joint in threaded pipe connections.

ii. The requirements that 46 CFR 54 contain "modifications" to the adopted code are significant and straightforward, and should be reviewed by marine safety personnel approving or inspecting pressure vessels. They discuss loadings due to ship's motions, corrosion allowance and protection, external pressure, low temperature service, toughness testing of materials, inspections, stamping, data reports, pressure relief devices, pressure relief under fire conditions, welding, nondestructive examination, materials, and stress relief.

(2) Stress Calculation.

(a) Introduction.

i. To determine the allowable design stresses for multi-axial stress conditions that occur in pressure vessels, several theories of failure have been developed. Since all sections of the ASME Code do not base design requirements on the same failure theories, it is worthwhile to briefly consider these concepts. The

3.E.2.g(2)(a) i. (cont'd) purpose of the failure theories is to predict when failure will occur due to combined stresses on the basis of data gained from simple uniaxial tests.

ii. Section I and Section VIII, Division 1 are based on the "Maximum Stress" or "Rankine" Theory. Under this theory, failure occurs when one of the principal stresses reaches the yield point value in tension or compression. The principal stresses in a cylinder are axial stress, radial stress, and tangential or hoop stress. Section III (Nuclear Power) and Section VIII, Division 2 are based on the "Maximum Shear Stress" or "Tresca" Theory. Under this theory, failure occurs when the maximum shear stress reaches some critical value, which depends on what type of loading the pressure vessel part is experiencing. The equation for stress analysis known as the Lame Equation, which is frequently used in analysis of thick wall cylinders, is based on the maximum stress theory. The ASME modified membrane equation,

$$t = \frac{PR}{SE - 0.6P} + C$$

is in very close agreement with the Lame Equation, and also takes into account weld joint efficiency and corrosion allowance (see ASME Section VIII, Division 1, UG-27 for definition of symbols). In a thin cylinder under internal pressure, where the radial stress is close to zero, the maximum stress and maximum shear stress theories give approximately the same results. However, in thick-wall cylinders having a radial stress that is not small in comparison to axial and hoop stress, the maximum shear stress theory will give results that coincide more closely with experimental data. It should not be concluded, however, that a thin-wall pressure vessel designed under Section VIII, Division 1 will be the same as one designed per Section VIII, Division 2. Safety factors and other parameters in the code sections differ significantly, as will be discussed in more detail later. One important characteristic of the maximum shear stress theory is that it can predict the failure of a material under either static or fatigue loading with good accuracy. It also gives excellent agreement with experimental results in the case of high tensile steels.

(b) Alternate Stress Theories. Two other failure theories should be mentioned, although they are not widely used in pressure vessel design. In the "Maximum Strain Energy" Theory (also known as the "distortion energy" or "Von Mises" Theory), rupture occurs when the strain energy per unit volume reaches a critical value. In the "maximum strain" theory, the part will fail when the maximum strain equals the strain at the elastic limit under simple tension.

3.E.2.g(2)

(c) Application of Engineering Judgment. One cannot be satisfied with a determination of stresses from a design analysis until all loads have been adequately considered. Paragraph UG-22 of Section VIII, Division 1 lists several types of loading that may be imposed on a pressure vessel, and that should be taken into account by the designer. 46 CFR 54.01-30 adds to this list by including static and dynamic factors peculiar to marine applications. During plan approval, some engineering judgment must be applied in deciding which of these loads will have a potentially significant effect on vessel stresses. For example, large low pressure tanks containing liquids may be highly stressed by both static liquid head and saddle supports. Liquid contents raise the reaction forces of the saddles. Sloshing loads could also be high in large liquid-containing vessels when baffles are not provided. Changing orientation of a ship (list and trim) or dynamic characteristics of a particular ship may sometimes need to be determined and used in defining pressure vessel loads. In most cases when a ship's motions should be considered, a simplified method that has proven satisfactory in the past has been to apply a static weight factor of 2G downward, and a 1G force in the fore-and-aft and athwartships directions. For the vast majority of pressure vessels approved under Part 54, dynamic loading from ship's motions need not be checked. Good engineering judgment must be applied in every case.

(d) Design of Saddle Supports for Horizontal Pressure Vessels. This is usually done with the assistance of a paper written by L. P. Zick, although other methods (including finite element analysis) may be used. Zick's paper, "Stresses in Large Horizontal Cylindrical Pressure Vessels on Two Saddle Supports," was published in the Welding Journal, Res. Suppl. 30 (1951). Although Zick's paper may be modified to accommodate vessels on three saddle supports, use of more than two saddles should usually be discouraged on a flexible foundation such as a ship. If all supports are not perfectly aligned, additional loads will be imposed on the vessel. Although Paragraph UG-22 requires that loadings must be considered, it does not give clear information on how to do so.

(e) Additional References. Some other references that may be useful in approving pressure vessel plans are:

i. Process Equipment Design, by Brownell and Young; John Wiley and Sons, Inc.

ii. Pressure Vessels - The ASME Code Simplified, by Chuse; McGraw-Hill Book Company, Inc.

iii. Theory and Design of Modern Pressure Vessels, by Harvey Van Nostrand; Reinhold Publishing Company.

iv. Defects and Failures in Pressure Vessels and Piping, by Thielsch, Reinhold Publishing Company.

3.E.2.g(2)(e) v. Formulas for Stress and Strain, by Roark; McGraw-Hill Book Company, Inc.

(3) ASME Code, Section VIII, Division 1.

(a) Introduction. Since Section VIII, Division 1 of the ASME Code is so frequently used, this section is provided to detail these rules and their correct application. Most comments are intended to clarify or explain the basis of code requirements. Much of what is said will apply to Section I of the Code as well. The basic design criteria of Section VIII, Division 1 of the ASME Code is to provide adequate wall thickness in a vessel so that the maximum membrane stress does not exceed the allowable stress. The maximum allowable tensile stress values permitted for the various materials are given in Subsection C, Table UCS-23 of the code. The basis for establishing the allowable stress values is given in Appendix P. At temperatures below the creep range, except for bolting materials, the allowable stresses are generally based on the lowest value of the following:

i. 1/4 of the specified minimum tensile strength at room temperature;

ii. 1/4 of the tensile strength at temperature;

iii. 5/8 of the specified minimum yield strength at room temperature for ferrous materials;

iv. 5/8 of the yield strength at temperature for ferrous materials;

v. 2/3 of the specified minimum yield strength at room temperature for nonferrous materials; or

vi. 2/3 of the yield strength at temperature for nonferrous materials.

The code provides for increasing these allowable stresses for certain austenitic and nonferrous material. These higher allowable values are not recommended for flanges and other strain sensitive uses.

(b) Temperatures Below The Creep Limit. If bolting materials are used at temperatures below the creep range, with material strength increased by heat treatment or strain hardening, the following additional limits apply:

i. 1/5 of the specified minimum tensile strength at room temperature;

ii. 1/4 of the specified minimum yield strength at room temperature;

iii. At temperatures above the creep range, the allowable tensile stresses are based on the lowest value of the following:

3.E.2.g(3)(b)iii

a. 100 percent of the average stress for a creep rate of 0.01 percent in 1000 hours;
b. 80 percent of the minimum stress for rupture at the end of 100,000 hours; and
c. 67 percent of the average stress for rupture at the end of 100,000 hours.

The allowable compressive stress is the same as the allowable tensile stress value, or the value determined according to UG-23(b), whichever is lower.

(c) Localized and Secondary Bending Stresses. It is recognized that high localized and secondary bending stresses exist in code vessels. Design rules for construction details have been written to hold such stresses at a safe level consistent with experience. One reason for the 3,000 psig limit on the scope of Section VIII, Division 1, is that many of these construction details are not appropriate for higher pressure applications. The basic design of specific parts such as heads and shells are covered by code design rules. However, if a vessel is subjected to severe cyclic operation, is in some other severe service, or has a complex geometry not covered by the rules, additional stress analysis will probably be necessary. Since Division 1 is primarily for membrane vessels, stress in the radial direction is usually not considered.

(d) Hoop Stresses. The general design formulas are given in UG-27. The hoop stress formulas are limited to a wall thickness not exceeding one-half of the inside radius and pressure not exceeding 0.385 SE (symbols defined in the code). When these limits are exceeded, the UA-2 (A)(1)requirements must be followed. The longitudinal stress formulas are limited to a maximum thickness of one-half of the inside radius and a thickness not exceeding 1.25 SE, with UA-2 (A)(2) followed beyond these limits. In a thin-walled cylinder with hemispherical heads, the average hoop stress in the shell is about twice the average axial (longitudinal) stress in the shell and twice the average stress in any direction of the hemispherical head. The average radial stress on the cylinder and head is compressive and equals one-half the internal pressure. This shows that, for internal pressure, the average hoop stress usually controls. Design formulas for other than hemispherical heads are based on a combination of analytical stress analysis, experimental stress analysis, and experience. The flat head formula must be adjusted for various details of joint design.

(e) Failure Criteria. The failure criteria used for external pressure or axial compression is elastic instability (buckling) and yielding from compressive stress. Provisions are included for design of stiffening rings. The minimum required thickness is found by a trial-and-error method. Once again, some materials have lower temperature limits in the stress curves for external pressure than the same materials in the tensile stress tables.

3.E.2.g(3)

(f) Shell and Head Openings. Openings in shells and heads must be designed per UG-36 through UG-42. When this is not practical, the ligament efficiency rules of UG-53 may be used. In viewing a cross section of the opening, adequate excess material must exist in the vessel and nozzle wall, or be added around the opening, to replace the material missing in the corroded hole in the vessel wall. Appendix L gives examples of application of these rules that are very helpful. In addition to providing the area of reinforcement, adequate welds must be provided to attach the reinforcement metal, and the induced stresses must be evaluated. The goal is to compensate for the weakening effect of the opening with metal of a suitable profile so as not to introduce an overriding stress concentration itself.

(g) Welded Joints. In applying code requirements for welded joints, it must be remembered that they are minimum requirements; design loads may require construction that is more restrictive. Requirements for weld geometrics, sizes, and details are contained in Part 13W. Section VIII, Division 1, as it is presently written, generally bases allowable stresses on one-fourth of ultimate tensile strength, as discussed earlier. However, to allow this stress value and the associated wall thickness and safety factors, the code requires mandatory examination of all butt welds by radiography. When butt welds are not radiographed or where butt welds are not used, the wall thickness and safety factor required are increased by Factor E in the design formulas. Factor E is referred to as the "joint efficiency" of the weld. In fact, this terminology is not all that appropriate. It is a carryover from before 1930, when most pressure vessels were of riveted construction. "Joint quality factor" is a more appropriate term, but "joint efficiency" will be used for consistency with the code. The intent of the code is to have three quality levels, one where all butt welds in the vessel are fully or partially radiographed, one for spot radiography, and one for welds without radiographic examination.

(h) Code Distinctions Covering Welded Joints. It is important, when doing pressure vessel plan review for the Coast Guard, that one understand the purposes and differences between the following paragraphs:

i. UW-2 Service Restrictions;
ii. UW-3 Welded Joint Categories;
iii. UW-11 Radiographic Examination;
iv. UW-12 Joint Efficiencies; and
v. Table UW-12, Maximum Allowable Joint Efficiencies.

A reviewer must have a complete understanding of service restrictions, joint design, and joint examination requirements to be able to correctly apply the code. This understanding is best gained by careful study of the content and intent of the code rules. If the design formula used has an E value selected from Table UW-12, the quality factor is

3.E.2.g(3) (h) (cont'd) built in and no further consideration is required. However, formulas that do not contain an E value, which are used to calculate parts of vessels that include non-examined butt welds, require addition of an 80 percent quality factor or an 85 percent factor where spot radiography is used. Joint "category" designations are locations of joints in a vessel, and have no bearing on the type of joint. The February 1975 issue of ASME's Journal of Pressure Vessel Technology contains an article by G. M. Eisenberg that is of great assistance to understanding E factors and stress multipliers, and how they relate to requirements for radiography of butt welds; examples shown in Appendix "L" of the code will also be helpful. Since the degree of radiography affects the safety factor of a vessel designed to code rules, it helps to be reminded that no amount of radiography increases the strength of a weld. Only the assurance of weld quality is increased. [NOTE: Supplementary design rules are contained in Mandatory and Non-Mandatory Appendices of the code. Space does not permit discussion of all these provisions. However, those pages contain a wealth of requirements, recommendations, and information of which a code user should be aware.]

(4) ASME Code, Section VIII, Division 2.

(a) Introduction. Section VIII, Division 2 of the code contains alternative rules for pressure vessel design. Under Division 2, it is possible to design pressure vessels with a theoretical design margin (factor of safety) of three, based on the ultimate tensile strength of the material. This differs from Division 1, which essentially requires a design margin of five (which can be reduced to as low as 3.5 if certain procedures such as radiography are used).

These rules may not be used for portable pressure vessels other than pressure vessels for human occupancy (PVHO's) used in diving operations. Because of the demand for higher pressures and temperatures for pressure vessels and limitations on availability of materials, Division 2 was developed and published in 1968. Its main goal was to provide for better utilization of existing materials. What does this lower factor of safety really mean? Essentially, with the higher stresses allowed, it offers the possibility of manufacturing a lighter vessel, with thinner shells and heads and less weld metal; but the lighter vessel may carry a higher price tag. There are many restrictions on material selection; a very detailed stress analysis is required. Inspection and testing procedures are much more comprehensive than for Section VIII, Division 1 vessels. In fact, the costs of the extra engineering and inspection efforts will often outweigh the savings in material and fabrication costs.

(b) Professional Certification. One important feature of Division 2 is that the user of the vessel is required to present the manufacturer detailed information about intended operating conditions. This information must be certified by a registered professional engineer experienced in pressure

3.E.2.g(4) (b) (cont'd) vessel design. The manufacturer's design report and the design calculations must also be certified by a registered professional engineer. This is to ensure that all loadings and service conditions, such as cyclic service, corrosive environments, low temperature applications, etc. have been properly taken into account. [NOTE: The quality control procedures required for Section VIII, Division 2 vessels is comparable to those required in Section III for nuclear vessels.]

(c) Stress Evaluation and Design Review. Stresses in Division 2 are divided into various categories, and allowable stress values vary according to the type of stress being evaluated. Much of the stress terminology used in Division 2 is foreign to Division 1. For example, allowable stress values are expressed in terms of "stress intensities." As noted above, Division 2 is based on the Maximum Shear Stress Theory of failure. Under this theory, the yield stress of a material is equal to the difference of the maximum and minimum principal stresses, or twice the maximum shear stress. In Division 2, the specified yield stress is called the "stress intensity" of the material. How does Section VIII, Division 2 permit higher allowable stresses without reduction in safety? This is accomplished by requiring a rigorous analysis, and classification of all types of stresses and loading conditions. This is called "design by analysis." Manufacturing and inspection procedures are also better controlled. Certified design specifications and a formal stress analysis document, both signed by a professional engineer involved in pressure vessel design, are required. Section VIII, Division 2 vessels are normally reviewed by Commandant (G-MSE-3).

h. Heat Exchangers.

(1) Introduction. Heat exchangers are widely used aboard ship to transfer heat from one gas or liquid to another. Shell-and-tube exchangers are the most common marine type, except that deaerating feedwater heaters are often a direct-contact type. The more simple variety has straight tubes, fixed tubesheets, and are single-pass (i.e., the tube side fluid flows in one direction only); a two-pass unit has the inlet and outlet connections at the same end.

Some units, such as oil coolers, may have a floating tubesheet at one end to accommodate differential thermal expansion between the shell and tubes. Shell expansion joints and U-tube designs are also used. In coolers using seawater as the cooling medium, galvanic protectors (usually zinc) are used to protect the parts from galvanic corrosion. The joint most likely to leak in a heat exchanger is the tube-to-tubesheet joint. The tubes are normally expanded into the tubesheet using a mandrel, and care must be taken to use a correct procedure to ensure a tight joint. Tubes sometimes are fitted with fins to increase the heat transfer area of the exchanger. Sometimes baffles are installed in the shell to direct the shell-side flow and to provide tube supports. Marine heat exchangers are usually designed to perform in

3.E.2.h (1) (cont'd) conditions up to a 30 degree roll. Copper-nickel alloys, bronze, and various product forms of steel are the common materials used in marine heat exchangers. Marine heat exchangers are designed and located to facilitate cleaning and inspection in what is often a tight space. Inspection requirements must be taken into account in designing and locating the equipment.

(2) General Requirements. The designer of a marine heat exchanger must be attentive to the reliability of the heat exchanger in doing its job, while at the same time meeting requirements of TEMA, ASME, a classification society, the owner, and the Coast Guard. The Coast Guard, being primarily interested in the safety of the heat exchanger as a pressure vessel, places more emphasis on the design of the pressure envelope than on performance requirements. The criteria for acceptance as a heat exchanger is basically that of acceptable performance after installation. As a pressure vessel, however, the unit must meet the appropriate requirements of 46 CFR 54, unless exempted by 54.01-15(a)(4) or (5). Exemptions based on volume should be determined through the net internal volume of the shell (excluding tube volume). Some heat exchangers may at times operate with a vacuum, and consequently must be designed for external pressure. Any part of the exchanger must be designed for the greatest pressure differential that may occur across that part, including failure of an adjacent pressure boundary. Thus, shells must survive tube failures. Tubesheets or partitions with positive pressure on one side and vacuum on the other must be designed for the maximum total pressure differential to which the part may be subjected.

(3) Fuel Oil Heaters. Fuel oil heaters normally use steam as the heating medium. Close control of the heat is needed to provide temperatures high enough for proper fuel atomization, but low enough to keep carbon residues from forming in the heaters. Electric element immersion heaters must meet the requirements of 46 CFR 111.85. If fluid from a fired thermal fluid heater is used to heat fuel, it is recommended that the piping for the heat transfer fluid be so arranged that the heat transfer fluid pressure will be higher than the fuel pressure. This should be the case whether the system is operating or shut down.

This will reduce the risk of fuel leaking into the heat transfer fluid and being pumped through the thermal fluid heater.

This arrangement can be accomplished by maintaining a head on the fluid side with an expansion tank at a location higher than the fuel being heated; an alternative is to provide an intermediate heat exchanger. The U.S. Navy sometimes uses double-tubesheet exchangers to avoid contamination of one fluid by another. [NOTE: Unfired steam generators are boilers, rather than heat exchangers, for purposes of applying 46 CFR 54 requirements.]

(4) Pressure Relief Requirements. Pressure relief device requirements for heat exchangers are found in 46 CFR 54.15. Essentially, if the shell pressure is lower than the tube pressure, the shell side should be adequately protected in the case of a tube failure. If the only source of pressure on the high pressure side is an upstream pump, then a relief valve in

3.E.2.h (4) (cont'd) the piping between the pump and the heat exchanger may be used in lieu of a device installed directly on the high-pressure side of the heat exchanger.

i. Authorized Inspectors And Holders of ASME Code Symbol Stamps.

(1) Introduction. To assure integrity in the manufacture, installation, and testing of pressure vessels, independent third party inspection is required. Because of the special interests involved, manufacturers and users are not solely relied upon to ensure compliance with Coast Guard or ASME Code requirements. Coast Guard personnel inspect nearly all pressure vessels installed aboard certificated ships. However, some pressure vessels are exempt from Coast Guard plan review and shop inspection by 46 CFR 54 based on the presence of an ASME Code Symbol Stamp on the vessel. In these cases, the Coast Guard accepts the services of an "authorized inspector" (Al) in lieu of shop inspection by Coast Guard personnel (see paragraph UG-91 of Section VIII, Division 1 concerning Al's). In accepting pressure vessels with an official "U" or "UM" stamp, as set forth in Section VIII, Division 1, the Coast Guard is assured that certain quality control procedures are being followed by the manufacturer to provide compliance with code requirements. To receive a Certificate of Authorization to use a "U" or "UM" stamp, a manufacturer must have and demonstrate a quality control system established to meet code requirements.

(2) National Board of Boiler and Pressure Vessel Inspectors.

(a) Introduction. With headquarters in Columbus, Ohio, the National Board (NB) was formed to promote safety and uniformity in construction, installation, and inspection of boilers and pressure vessels, and to establish reciprocity between the United States and Canada. All Canadian provinces and most U.S. states require boilers and pressure vessels to be inspected during fabrication by an inspector holding a NB commission, and then to be stamped with a NB standard number. Qualified authorized manufacturers must be registered with the NB, and a data form for each vessel is maintained on file by the NB. To receive an NB commission, an inspector must meet minimum requirements of experience and education, pass a written examination, and be employed by a jurisdiction or an authorized inspection agency (such as a company that insures boilers and pressure vessels). The inspector may be employed by the manufacturer only if the products will be used exclusively by that company.

(b) Activities. Companies applying for an ASME Code Symbol Stamp are thoroughly investigated by the jurisdiction or by the NB before the company is authorized to manufacture ASME Code vessels. The Al assigned to that shop continually audits compliance of that shop with code requirements. Code requirements for manufacturers are contained in paragraph 13-2 of Section VIII, Division 1 of the ASME Code. The NB also administers the capacity certification of safety valves and safety relief valves constructed in accordance with ASME Code requirements. Since Coast Guard requirements are primarily

3.E.2.i(2) (b) (cont'd) based on ASME Code rules, valve capacities published by the NB may be used in approving valves for specific installations.

j. Foreign Manufacturers Of New Equipment.

(1) Boilers. Foreign-manufactured boilers to be installed aboard U.S. vessels must meet the requirements of 46 CFR 52 or 53.

(2) Pressure Vessels. Foreign-manufactured pressure vessels to be installed aboard U.S. vessels must meet the requirements of 46 CFR 54. If the pressure vessel requires shop inspection, this should be arranged well in advance to ensure availability of a Coast Guard inspector.

3. Piping Systems.

a. Introduction. Piping aboard inspected vessels is subject to regulation for various reasons. Failure of piping may endanger vessels, personnel, or the marine environment by:

(1) Failing to perform an essential function;
(2) Releasing energy or projecting missiles;
(3) Releasing harmful substances (hot, very cold, flammable, combustible, toxic, caustic, polluting, etc.); or
(4) Allowing the spread of fire, smoke or flooding.

Piping systems subject to requirements of 46 CFR 56 are considered to be in one or more of these categories. Unregulated systems are not regarded as being in any of these categories, and need only be safe from an occupational safety viewpoint. Such systems are required to meet commercial standards, such as being insulated, if hot, or keeping water away from electrical systems (see 46 CFR 56.04-10).

b. Piping Components.

(1) Introduction. The term "piping systems and appurtenances," as used in 46 CFR 56, includes several types of components defined in Subparts 56.10, 56.15, 56.20, 56.25, and 56.35. Questions frequently arise as to the distinctions between various types of fittings. In general, anything that is not clearly a pipe, tube, valve, flange, pressure vessel, or machine and is a pressure-containing component or appurtenance of a piping system is considered some kind of fitting. Fittings that serve no purpose other than joining pipe or tube (such as elbows and tees) are called "pipe joining fittings," unless they are covered by Subpart 56.30 or 56.35. The latter, such as "dresser" couplings, are called "special-purpose fittings"; all other fittings are called "fluid conditioner fittings." While this term refers to fittings that act on fluid (such as strainers, filters, or traps), it also applies to miscellaneous parts of the pressure boundary of a piping system (such as thermometer wells) (see 46 CFR 56.07-5(d) for more examples).

(2) General Requirements. All piping systems must have the necessary components for the safe and efficient operation of the vessel,

3.E.3.b (2) (cont'd) under 46 CFR 56.01-1(b), in combination with the "general equivalency regulations" (50.20-30, 30.15-1, 90.15-1, etc.). This appears to give the Coast Guard inspector and staff engineer nearly unlimited design authority; this is not the intent. 46 CFR Part 56 establishes requirements for typical ship piping systems.

The specific requirements of Part 56 should be used to determine what level of safety is intended. Only when systems, components, or materials not like those envisioned by the regulations are encountered should the broad authority of the general regulations be exercised. In such cases, this authority should be exercised to ensure an equal level of safety, occupational health, environmental protection, etc., and not to raise or lower the requirements. In such cases, recommendations for additional features may be made, but a clear distinction between the requirements and the recommendations must be provided. There are piping systems not subject to the requirements of 46 CFR Part 56 but still are considered of interest to the Coast Guard:

(a) Industrial systems aboard MODUs are regulated under section 58.60. The old exemption, allowing the use of any American Petroleum Institute (API) standard in any petroleum industrial piping, is no longer in effect for new vessels.

(b) Liquefied petroleum gas (LPG) cooking and heating piping and refrigeration piping are regulated by 46 CFR 58.16 and 58.20 respectively.

(c) Internal combustion engine exhaust piping is regulated by 46 CFR 58.10; Part 56 applies only to the extent called for by 46 CFR 58.10-5(d) and -10(a).

(d) Fluid power and control piping is subject to 58.30. For those systems requiring full review under 58.30, all Part 56 requirements not modified by 58.30 are applicable.

(3) Plan Review. When a system is regulated by 46 CFR 56, the requirements for plan review may be found in 56.01-10. These requirements are explained in Recommendations for the Submittal of Merchant Vessel Plans and Specifications, COMDTPUB P16700.4, NVIC 8-84. In brief, it is the intent of the Coast Guard to require only the necessary plans, material lists, calculations, analyses, etc. to verify compliance with all applicable regulations. Providing a high quality diagram and a bill of materials may relax the requirement for an arrangement plan.

(4) Classes of Piping Systems. Piping systems regulated by 46 CFR Part 56 have been divided into classes, based on the degree of hazard in the event of a failure that releases the contents. The flammability, toxicity, temperature, compressibility, and other such factors have been considered. 46 CFR Tables 56.04-1 and -2 may be used to determine the class of system in each case. This data is needed during review and inspection because many requirements, such as weld and joint details, design safety factor, etc. vary depending on class. The least hazardous systems are Class II. High-pressure or high-temperature systems

3.E.3.b (4) (cont'd) are Class I. Systems that may be below 0°F for reasons other than the surrounding weather are Class I-L or II-L instead of Class I or II.

c. Philosophy. Merchant ships do not carry large numbers of personnel as do Navy and Coast Guard ships. Therefore, the merchant ship substitute for active "damage control" is passive damage resistance. Piping is expected to resist noncombatant types of damage without intervention by the crew. Piping systems designed in accordance with 46 CFR 56 are assumed to have this resistance because they meet appropriate standards in each case for pressure-temperature safety factors, fire resistance, duplication, shock resistance, etc. The basic design standard is American National Standards Institute (ANSI) B31.1, the code used by the steam power plant industry ashore. It is comparable to the American Society of Mechanical Engineers (ASME) Boiler and Pressure Vessel Code in that it is based on a safety factor of four for primary ultimate tensile stresses, and the material properties are guaranteed by the use of acceptable specifications that call for both chemical and physical testing of each lot of material and other elements of quality control. ASME B31.1 is amended for marine use by several specific requirements of 46 CFR 56.

d. Impact of SOLAS. The International Convention for the Safety of Life at Sea (SOLAS) (discussed in volume II of the manual) has the force of law. Accordingly, some of the Marine Engineering Regulations in 46 CFR Part 56 provide for differences for vessels on international or domestic voyages. Differences are in the areas such as fire mains, bilge systems, hull penetrations, overflows, overboard discharges, and collision bulkheads.

e. Design Standards. As mentioned above, the design standards for piping systems are largely taken from ANSI B31.1, the "Power Piping" volume of the American National Standard Code for Pressure Piping. As a result of recent reorganization within ANSI and ASME, B31.1 will remain an American national standard, but will be called ASME B31.1. Any reference in this manual and in the Code of Federal Regulations to ANSI B31.1 applies equally to ASME B31.1, unless otherwise specified. This code, intended for steam power plants ashore, is modified for marine use by 46 CFR 56. General design requirements appear in subparts 56.07 and 56.60; specific design requirements are found throughout Part 56, particularly in 56.50. The basic design standard has a safety factor of four or five (between maximum primary membrane stress encountered in service and ultimate tensile strength of the material) for generally acceptable material specifications, depending on the level of design analysis, nondestructive examination, and hazard. When materials with lower levels of quality control are permitted, the safety factor should be increased proportionately. This safety factor may be as high as ten when completely untested but otherwise acceptable components are involved. It is thus difficult to separate "design" and "material" requirements in practice. Component standards like ANSI B16.5 and B16.34 provide excellent examples of the interplay between design details, pressure, temperature, material, and quality control. This is as true for systems as it is for components. The design standards are modified for marine application as follows:

3.E.3.e (1) Table 56.01-5(a) lists changes to ASME/ANSI B31.1 noted above.
(2) Section 56.01-10 shows which systems are regulated.
(3) Section 56.07-10 establishes design criteria, including the following:

(a) The maximum allowable working pressure (MAWP) must be no lower than the maximum pressure the system could be subjected to. This must be assured by the pump stall head or a relief valve, not by a regulator or control switch alone;

(b) Dynamic effects of ship motion, collision, etc., should be addressed; and

(c) Allowable stress values of acceptable materials are set, and 80 percent of these values must be used for Class I, I-L, and II-L systems not subjected to extra testing and analysis (this provides the safety factor of 5 as noted above).

(d) Section 56.60 describes acceptable materials, lists those that are generally acceptable but not listed in Sections I, III, or VIII of the ASME Boiler and Pressure Vessel Code, explains how to obtain acceptance of other materials, and states specific limitations on various materials.

[NOTE: Many of the materials listed in Tables 56.60-1(a) and -2(a) become generally acceptable as a result of changes in the allowable stresses and quality assurance provisions made by the tables and their footnotes.]

4. Specific Piping Systems.

a. Vital Systems. This term is used in several places in regulations and other documents without formal definition. A system should be regarded as "vital" if it must start or continue working to protect the vessel, personnel, or the marine environment from serious harm. This includes, but is not limited to: propulsion and its necessary auxiliaries; ship's service and emergency electrical generation and necessary auxiliaries; steering; firefighting; bilge pumping; and cargo containment systems. However, once a system or a portion of a system has been defined as vital, the specific regulatory requirements should not be applied arbitrarily. For example, aluminum and other heat-sensitive materials should not be used in vital parts of systems without specific authorization. If the vital system is one that may not continue to function after a major fire, such as propulsion or steering, the use of some aluminum components that would not be damaged by minor fires may be authorized. Dry fire mains and dry foam mains, on the other hand, must resist major fires while dry, then function properly later. Aluminum components should not be authorized in this type of system. [NOTE: In the past, the term "vital" has sometimes been used to cover "hazardous" systems as well. A hazardous system may or may not be vital. For example, a high-pressure air system used only for tools and industrial machinery could contain a great deal of stored energy and could injure personnel or even damage the ship if it failed violently. However, it is not "vital" because it could be placed out of commission at any time, even during a casualty or in a maneuvering situation, with no

3.E.4 a. (cont'd) risk to personnel, vessels, or the marine environment. Non-vital hazardous systems are subject to most regulations, but not to those specifically limited to "vital" systems.]

b. Hydraulic System.

(1) General. If a hydraulic system is of fail-safe design and is not identified in any subparagraphs of 46 CFR 58.30-1(a), it is not subject to all of the detailed requirements of subpart 58.30, but must meet the requirements of subpart 58.30-50. A hydraulic system is regarded as fail-safe under 58.30-1(a)(2) or (11) if it is equipped with features that prevent damage or injury upon failure of the power source or the system itself.

(2) Fail Safe Designs. The most common form of fail-safe feature is a spring-loaded brake that requires hydraulic pressure to release it before the system can operate. Such brakes can stop a crane load or boom in place when either the hydraulic system develops a severe leak or the power to the pump fails. This is the preferred (and typically employed) method. A second type of fail-safe feature such as slow and controlled release of the load for hatch covers is sometimes acceptable.

This variation has two potential problem areas. Normally, there will be one part, often a cylinder, that must remain intact for the fail-safe feature to remain operational. Also, slow lowering is not truly a safe failure if the system operates a crane used to hoist a diving bell or transfer personnel to and from a drill rig, so that it passes over water, over a rack of loose pipes, or through any other area where slow lowering would not actually be safe.

c. Low-Temperature Systems.

(1) Introduction. Low temperature or "cryogenic" systems are those containing a fluid, usually a liquefied gas, at a temperature below 0°F. These systems share several common hazards:

(a) Leakage of cold liquid can cause instant frostbite injuries;
(b) The cold makes many materials, including system piping and most grades of deck and hull steels, brittle and prone to sudden and severe cracking;
(c) The quantities of stored energy are enormous. Liquefied natural gas, for example, occupies only one six-hundredth of the space the same weight of gas occupies at normal pressures and temperatures;
(d) Many of the fluids are flammable, fire-reactive, or toxic, and vaporize rapidly upon release.

Therefore, in addition to the normal requirements of Part 56, specific requirements are found in 46 CFR 38, 56.50-105, 56.70, 57, 98.25, 151, and 154. These requirements deal mainly with material selection, avoidance of notches and crevices, welding qualification, containment, and vapor handling.

(2) Cryogenic Welding. In particular, the review of cryogenic welding procedures requires special consideration. The

3.E.4.c (2) (cont'd) applicable regulations and the ASME Code sections cited therein are easy to misinterpret. Normally, these procedures are submitted or forwarded to the MSC for review. The MSC will then approve the procedures subject to qualification testing to the satisfaction of the cognizant officer in charge, marine inspection (OCMI). Personnel wishing to become familiar with the review of cryogenic welding procedures should first read 46 CFR 57.03, as well as all references cited directly or indirectly by this regulation, including several parts of 46 CFR 54 and Sections VIII and IX of the ASME Boiler and Pressure Vessel Code. Sections A, IIB and IIC of the Code and the American Welding Society (AWS) Handbook should also be available for reference, particularly for the characteristics of the particular materials involved.

(3) Hypothetical Calculations. Consider the question "If two pieces of A312 Gr. 316L pipe are welded to each other for liquefied natural gas (LNG) service at -260° F, where must Charpy V-notch specimens be taken and what must the result be?" The answer is three specimens at the weld center only, tested at -270° F, 15 mils lateral expansion. A more complex version of the same type of question is "If a piece of A-312 Gr. 316L pipe is welded to a piece of A-333 Gr. 1 pipe for ammonia service at -28° F, where must Charpy V specimens be taken and what must the result be?" In this case, the answer is three specimens each at the weld center, fusion line, and 1, 3, and 5mm into the heat-affected zone on the carbon steel side only, tested at -38° F, 20 ft-lb if full-size Charpy specimens can be obtained.

d. Use of ANSI B16.5 And B16.34. Carbon and low-alloy steel, stainless steel and nickel alloy flanges, flanged fittings, flanged valves, and butt-weld end valves are covered by ANSI B16.5 and B16.34. These standards are unusual in that markings, materials, pressure ratings, and quality control are generally comparable to Coast Guard requirements. When the symbol B16, the material specification and/or grade, and the rating class can be read off the component body and/or label plate, B16.5 or 16.34 provides the acceptable pressure at the service temperature. Checks of §56.60 should be conducted to ensure there is no specific restriction on the material (like plain carbon steel limited to 775°F) and 56.07-10(c) to determine whether the full ANSI pressure rating or 80 percent of it applies. In some cases (e.g., small fittings, components with lost label plates, old stocks marked to previous editions of the standards, and blind flanges marked to the 1977 editions), the marking may be insufficient. In these cases, a mill or manufacturer's certificate, catalog data, or equal should be used to supplement the marking on the component if necessary to determine suitability for the intended service.

5. Steering Gear.

a. Introduction. The steering gear system is one of the most critical systems aboard ship. The disastrous results that can occur after the loss of steering capability in a maneuvering situation or inability to regain steering capability in a short time have been graphically demonstrated by the SEAWITCH, AMOCO CADIZ, and other casualties. Extensive activity in the development of steering gear requirements has taken place both internationally and nationally. The first set

3.E.5 a. (cont'd) of Amendments to the International Convention for the Safety of Life at Sea (SOLAS), 1974 was effective on 1 September 1984. These amendments contain the latest requirements for steering gear systems (Regulations 29 and 30). Corresponding Coast Guard regulations are found in 46 CFR 58.25 (machinery) and 33 CFR 164.39 (U.S. and foreign tanker requirements).

b. Regulatory Developments. Regulation projects have been completed to incorporate not only the steering gear sections, but also all of the SOLAS amendments into Titles 33 and 46, CFR. Most of the electrical requirements for steering gear systems have already been updated in Subchapter F. Major improvements to the steering gear systems include the steering control systems, indicating and alarm systems, and the regaining of some steering capability after a single failure. Steering gear hydraulic systems are vital fluid power and control systems. As such, the requirements of 46 CFR 56 as modified by subpart 58.30 are applicable. Portions of the systems exceeding a MAWP of 225 psig are Class I piping systems. Particular attention should also be given to mechanical connections. These are required to be only of sound and reliable construction, in many cases they represent single failure points in the steering gear system. For more on inspection of steering gear, see Volume II of this manual.

F. Vital System Automation (46 CFR 62).

1. Introduction. In 1975, the Intergovernmental Maritime Consultative Organization (IMCO) [now International Maritime Organization (IMO)] adopted Resolution A.325 (IX), "Recommendations Concerning Regulations for Machinery and Electrical Installations in Passenger and Cargo Ships." This resolution addressed, among other things, periodically unattended machinery spaces; it recommended that governments apply as soon as possible regulations set out in the resolution, in conjunction with the applicable requirements of SOLAS 74, which entered into force on 25 May 1980. 46 CFR Part 62 addresses, in part, the condition of periodically unattended machinery spaces and incorporates the principles contained in "Automated Main and Auxiliary Machinery; Supplemental Guidance On", COMDTPUB P16700.4, NVIC 6-84 and Enclosure (1) of "Automated Main and Auxiliary Machinery", COMDTPUB P16700.4, NVIC 1-69. Often, Part 62 is incorrectly presumed to apply only to machinery or electrical installations that reduce vessel manning requirements; it applies to all automatically or remotely monitored or controlled systems or equipment.

2. NVIC's 1-69,1-78, and 6-84. "Automated Main and Auxiliary Machinery; Supplemental Guidance On", COMDTPUB P16700.4, NVIC 1-69, and "Automated Main and Auxiliary Machinery", COMDTPUB P16700.4, NVIC 6-84, are effectively superseded by 46 CFR 62. Similarly, "Automation of Offshore Supply Vessels of 100 Gross Tons and Over", COMDTPUB P16700.4, NVIC 1-78 is superseded by 46 CFR 130. It is expected that these NVICs will be reviewed in the future, any still pertinent info will be transferred to this chapter of the Marine Safety Manual, and they will be cancelled.

3. Automatic Auxiliary Boilers (46 CFR 63).

a. General. 46 CFR 63 contains regulations for control systems for automatic auxiliary heating equipment, steam boilers, water heaters, fluid heaters, and electric storage tank water heaters. This part was

3.F.3 a. (cont'd) first published December 12, 1968. Prior to that date, only automatic steam boilers operating at pressures exceeding 30 psi, used for purposes other than propulsion, were covered by regulations under 46 CFR 162.026 (Requirements for Boilers, Auxiliary, Automatically Controlled, Packaged, for Merchant Vessels). In actual practice, portions of Subpart 162.026 had been applied to other heating equipment. Certain portions of 162.026 were used in Part 63; however, the preponderance of Part 63 requirements were new at that time.

b. Incinerators. Incinerators installed on U.S. Coast Guard certificated and inspected vessels must comply with Title 46 of the Code of Federal Regulations (46 CFR) Subpart 63.25-9. 46 CFR 63.25-9 requires that incinerators meet the standards in International Maritime Organization Resolution MEPC.76(40), be tested for its emissions at an independent laboratory acceptable to the U.S. Coast Guard, and also be type approved by the U.S. Coast Guard. Type approvals are conducted by the Marine Safety Center.

G. Electrical Systems.

1. Introduction.

a. Overview of Electrical Systems. Electrical regulations are provided to set forth uniform minimum requirements for electrical equipment and systems aboard vessels in accordance with the intent of various statutes, the International Convention for Safety of Life at Sea (SOLAS), and other treaties that contain requirements regarding electrical installations. These requirements are intended to ensure that electrical installations aboard vessels provide services necessary for safety under both normal and emergency conditions and protect passengers, crewmembers, and other persons from electrical hazards. In addition, environmental concerns have played a major role in the development of various sections of the Electrical Engineering Regulations. Navigation and Vessel Inspection Circulars (NVIC's) and the Marine Safety Manuals (MSM), Volumes I-X, COMDTINST M16000 (series), augment regulations with clarifications and explanations.

b. Purpose of MSM Guidance. The Electrical Engineering Regulations, 46 CFR Subchapter J, can be difficult to understand. Regulatory intent, equivalency information, inspections aids, and examples are not provided. This section of the MSM provides information to fill the void caused by the limitations of the regulations as they apply to electrical equipment and systems on merchant vessels and mobile offshore drilling units. It also promulgates information on equipment, systems, materials and methods that have been deemed by the Commandant (G-MSE) to provide an equivalent level of safety.

This guide's purpose is not to repeat the regulations, but to augment them. Nothing contained in this guide shall be taken as amending the Code of Federal Regulations, nor as limiting the authority of the Officer in Charge, Marine Inspection (OCMI) in the determination of acceptable materials, systems, and installation methods.

c. History. Since the first electrical installations on the passenger ships "CITY OF BERLIN" and "MENDOZA" in 1879, a complex set of standards and regulations has evolved to address the hazards presented and the benefits provided by electrical equipment and

3.G.1 c. (cont'd) systems. Domestically, early efforts involved the early Bureau of Marine Inspection and Navigation (predecessor to the Coast Guard's Marine Inspection Program) and the American Institute of Electrical Engineers (predecessor to the Institute of Electrical and Electronics Engineers). Internationally, these involved the individual classification societies, the Intergovernmental Maritime Consultative Organization (predecessor to the International Maritime Organization) and the International Electrotechnical Commission. In the last few decades, the number of standards-making bodies affecting the marine electrical community has increased significantly.

d. The Electrical Program. The Marine Inspection Program uses plan review, and on-site inspection to ensure that electrical installations are designed, built and maintained in a manner to promote the safety of the vessel, its crew and passengers. The Electrical Engineering Regulations provide uniform minimum requirements for electrical equipment and systems in accordance with the intent of various statutes, the International Convention for Safety of Life at Sea (SOLAS), and other treaties that contain requirements regarding electrical installations. These requirements are intended to ensure electrical installations aboard vessels provide services necessary to protect passengers, crewmembers and other persons from electrical hazards.

e. Electrical Safety. Electrical Safety on ships includes the prevention of shock, fire and panic.

On a steel hulled vessel, a person is usually walking on or touching ground at all times, and is usually within reach of power cables or electrical equipment containing lethal voltages. The currents that can flow from an energized conductor to ground can be very large, even in an ungrounded system. Currents as low as twenty-five thousandths of an ampere (25 milliamps) that pass through the heart can cause death. Currents of a non-fatal magnitude, or currents having a path to ground through other parts of the body can cause severe burns and injury. Minor shocks can also create severe secondary injuries when muscles contract involuntarily.

Fire is the greatest dread of seamen, and electricity is one of the most frequent causes of fire. A fire hazard can exist wherever electrical potential is present, and on a ship, the electrical installation covers a far greater area than any other type of installation.

How can electricity start a fire? Current flowing through a conductor encounters resistance. This resistance generates heat. If the conductor is properly sized, the heat is harmlessly dissipated. Where the conductor is not adequate sized for the current, or where the heat generated by the current is prevented from properly dissipating, whether it is the normal current, an overload current, or a fault (high or low impedance) current, the heat can become excessive, and can start a fire in nearby combustible materials, such as cable insulation.

Electrically-caused fires most often involve wire and cable. Most vessels have many miles of cable run throughout the entire vessel spreading their risks to all locations. Whenever the protective

3.G.1 e. (cont'd) insulation of a wire or cable is damaged by heat, moisture, oils, corrosive materials, vibration, abrasion, or impact, or where faulty installation or operating conditions result in loose connections, the threat of fire exists.

Motors are also a frequent source of electrically-caused fires. Motor fires can be caused by overheating, such as would be caused by overloading, single phasing, inadequate ventilation, malfunctions, such as internal faults and arcing, and bearing failure caused by inadequate lubrication.

Proper shipboard electrical installations also help reduce or prevent panic during an emergency. Put an individual, such as a vessel passenger, in the dark, in a strange place, in threatening circumstances, and the stage is set for panic. Electrical installations are designed to keep the lights on, power vital equipment, and allow needed information to be passed to passengers and crew.

f. Regulations and References. The Electrical Engineering Regulations, 46 CFR Parts 110 - 113 (Subchapter J), contain the primary standards for the review of electrical installation on USCG certificated vessels. See Table 3G-1 for vessel types and their primary/ secondary applicable subchapter of the 46 CFR regulations.

Table 3G-1
Applicable Electrical Regulations

Vessel Type	Primary / Secondary Subchapter
MODU	I-A / J
Offshore Supply Vessels	L
Small Passenger Vessels > 150 passengers or with overnight accommodations >49 people.	K
Small Passenger Vessels Under 100 Gross Tons < 150 passengers or with overnight accommodations <49 people, > 6 passengers.	T
Passenger Vessels (100 GT or more)	H / J
Tank Vessels	D / J
Uninspected Vessels	C
Cargo & Miscellaneous Vessels	I / J

g. Maintenance of Standards. 46 CFR 110.10-1(b) lists the industry specifications, standards, and codes that are incorporated by reference and supplement the Electrical Engineering Regulations. For the most part, these standards are dynamic. Therefore, references and associated amendments are listed with publication dates to inform

3.G.1 g. (cont'd) the user of the official referenced standard. At times, that edition may not be the latest edition of the standard thus causing confusion within the industry. Since most standard changes often respond to an identified problem or hazard, and usually result in safer equipment, the USCG has allowed for equivalency determinations (46 CFR 110.20-1). In most instances, equipment constructed and tested in accordance with a more recent edition of a referenced document can be accepted as long as they provide a level of safety equivalent to that provided by equipment constructed and tested to the edition identified in the CFR.

2. Equipment.

a. Systems Approach. The Electrical Engineering Regulations are a combination of equipment and system requirements designed to ensure that electrical installations are both safe and functional. They consist of general requirements related to across-the-board "good marine practice," and specific requirements related to the various apparatus, their proper design, installation and use.

In years past, emphasis was placed on equipment design requirements, as the system was considered the sum of the components (equipment). Today, equipment quality has generally improved and manufacturers have become more aware of product safety and liability. Comprehensive industry standards now exist and are used for most apparatus. This is allowing the review emphasis to shift towards a systems approach. As indicated previously, evaluations of equipment should consider overall safety comparability. With today's limited resources for plan review and inspection, concentration should be on proper application of equipment, effect of failures on required system functions, and on vital safety features.

Emphasis should be on evaluating the "system" -

Is the apparatus enclosure appropriate for the location?

Is the fixture adequately grounded to reduce the shock hazard? -

Is the fixture enclosure fire retardant and not surrounded by combustibles?

Will the first upstream overcurrent device safely clear a fault in the fixture so that other parts of the electrical system are not needlessly affected?

If it is a vital safety system, is the failure indicated and an alternative or back-up provided?

Do the components go together?

This is the "systems" approach. This does not imply that individual equipment design details are not important, but stresses that where there are limiting constraints, the system should be given a higher priority.

A recent casualty can be used to illustrate the necessity of "systems" thinking. While working on a motor controller, a crew

3.G.2 a. (cont'd) member's screwdriver caused a short circuit. The upstream circuit breaker on the main board became damaged and did not open. Eventually, the generator circuit breaker tripped, but only after the switchboard had been destroyed, with the bus bars torn from their bases and internal components and wiring destroyed by fire. Two separate items, a faulty circuit breaker and the cleaning fluid used in the switchboard months before, were initially blamed. However, upon further analysis, improper system design features became suspect. The upstream circuit breaker probably did not clear the fault because it did not have adequate interrupting capacity for the available fault current. The switchboard was damaged because it was not braced for the available fault currents. The common denominator was the fault current analysis. The existing components were not appropriate for the system in which they were installed. The electrical plant was, either in the original design or during subsequent modifications, most likely considered an assembly of components. These components may have been acceptable if used within their design limitations, but were not adequate when used in a system with high available fault currents.

The systems approach usually begins with an analysis of the "one-line diagram" and it's supporting information. The plan review section of this chapter, 3.B.2.b(2), contains a "typical" shipboard electrical one-line diagram and index to the applicable requirements in 46 CFR Subchapter J, the National Electrical Code, IEEE-45, etc.

For electrical equipment on ships, it is not the intent of the regulations to require a separate class of "marine electrical equipment." The intent is to permit normal, off-the-shelf commercial and industrial equipment to the maximum extent practicable, with additional "marine" requirements only when needed. The acceptance of this type of equipment is made possible by careful consideration of equipment application, location and placement. Subchapter J contains general requirements for electrical equipment to ensure that passengers, crew, and other persons, and the vessel are protected from electrical hazards. It also ensures that equipment necessary under both normal and emergency conditions is located in a manner that allows for routine maintenance and testing, thus helping to ensure that the equipment will function properly when needed.

b. Location and Placement (46 CFR 111.01-3). Optimal equipment location should be sought. In general, electrical equipment should be located in as dry a location as practicable and electronic equipment located in a controlled environment. In evaluating location, both normal and abnormal conditions should be considered. Abnormal conditions include items such as piping leaks (overhead for lower pressures and "in the vicinity" for higher pressures). For more critical equipment, such as the main switchboard, the regulations provide specific construction and location details. Generally, equipment should be located where it would not be subjected to oil, vapors, steam or dripping liquids. However, where relocation is not practicable, or where additional safeguards are warranted, the equipment should be designed to withstand these influences. Equipment should also be located to minimize the risks to personnel when routine service is being performed.

c. Degrees of Enclosure (46 CFR 111.01-9). Where exposed to the weather, or in a space exposed to seas, washdowns, or similar

3.G.2 c. (cont'd) moisture, equipment must be in a watertight enclosure (NEMA 4 or 4X or IEC IP56). A watertight enclosure is one that does not leak when subjected to a specified hose or immersion test. Motors must be waterproof. Waterproof motors may experience some leakage when subjected to the hose test, however, the leakage must not hinder operation, or enter any oil reservoir, and provision must be made for automatic draining before the level becomes damaging. Where dripping liquids could fall on equipment, that equipment enclosure should be dripproof. Dripproof equipment is ordinarily designed to prevent falling drops of liquid or solid particles from interfering with the operation of the equipment when striking the enclosure downward at any angle from 0 to 15 degrees from the vertical. Some equipment is designed for angles up to 45 degrees. It should be verified during vessel inspection that electrical equipment is suitably located - away from damaging liquid (unless impracticable, in which case it must be suitably designed), and accessible for inspection, adjustment and testing.

d. Corrosion (46 CFR 111.01-11). The corrosiveness of the marine environment is well known, and protection can usually be accommodated at the design stage. Much of the equipment that finds its way to sea was originally intended for a commercial or industrial installation on land, and could quickly fail in a salt-water environment if additional precautions are not taken. For this reason, equipment located in the weather, or in other locations subjected to salt water, must be evaluated to ensure corrosion resistance. Not only must the enclosure be corrosion-resistant, but current-carrying components and internal parts whose failure would create an unsafe condition must also be corrosion-resistant.

e. Porcelain (46 CFR 111.01-13). Porcelain should not be used for lamp sockets, switches, etc. unless resiliently mounted. The concern is that rigidly mounted porcelain may fail under shipboard vibration and create a shock, fire or other hazard to the vessel and its personnel. Some off-the-shelf equipment, designed for typical land installations, only comes with rigidly mounted porcelain insulated components. In these instances, it may be necessary to add resilient mounts to the porcelain insulating material. Only in instances where porcelain failure would not create a hazard, or where there is data available to support a shipboard application, such as vibration and shock (impact) testing, should such rigid installations be evaluated for general safety equivalency.

f. Temperature (46 CFR 111.01-15). The present regulations assume an ambient temperature of 40 degrees Celsius (104° F), except for engine rooms, boiler rooms, and auxiliary spaces, which are assumed to be 50 degrees (122° F) (unless shown or designed to be less, in which case 40 degrees Celsius is assumed). There are, however, differences in national and international standards on assumed values of ambient temperatures. IEEE-45 allows for both 45 and 50 degree ambient temperatures for engine rooms, and allows switchboard apparatus (other than molded case circuit breakers) rated for 40 degrees to be used in 50 degree environments under some conditions (see Section 17.6 of IEEE-45). The American Bureau of Shipping's Rules assume a 45-degree ambient for engine rooms, but indicate that rotating machinery is to be rated for a 50 degree ambient. ABS is in agreement with the requirements in the IEC standards. In looking at the

3.G.2 f. (cont'd) differences in these standards, it must be remembered that assumed ambient temperatures reflect an opinion on the overall average or the typical or expected temperatures, not the range of temperatures that equipment may be expected to experience under all conditions of operation. It must also be remembered that although consensus opinions concerning a standard may change, the length of time it takes to implement those changes varies widely.

g. National Electrical Code. The National Electrical Code (NEC) indicates that for Code applications with Code wiring, the ampacity of the conductors connected to molded-case circuit breakers should be limited to that of 60 or 75 degrees Celsius wiring, even though the attached conductors may have a higher rating. Shipboard requirements in the Electrical Engineering Regulations do not impose this limit; such a limitation does not apply on ships and MODUs. Ship systems do not use Code wiring, and are not typical of common applications addressed by the Code. Cable constructed to the electrical engineering regulations have ampacities based upon rated conductor temperatures up to 100 degrees Celsius. Shipboard cables may be connected to circuit breakers without consideration of the NEC limitation.

3. Grounded Systems and Ground Detection (46 CFR 111.05).

a. Equipment Ground (46 CFR 111.05-3). The term "grounding" is often misunderstood due to use in several different concepts. A basic understanding of the various uses is important. There are three basic applications of "grounding" associated with safety of personnel or protection of electrical equipment. These are:

(1) The grounding of metal frames or housings of electrical equipment (chassis ground);
(2) The grounding of the neutral current-carrying conductor of an electrical distribution system; and
(3) The grounding of an electrical source of power in such a manner that the earth (or its substitute such as the hull) is used as a current-carrying conductor.

The first application is one of the most important uses of grounding to protect personnel from electric shock. Fixed equipment is usually grounded by its method of attachment to the vessel. Isolation mounted equipment is usually grounded by a flexible grounding strap between the enclosure and the hull. Portable equipment is usually grounded with a grounding conductor in the supply cable. This should connect the equipment housing to the vessel's hull. Under normal conditions, the housing is not energized. However, internal insulation breakdown or other failure can bring energized components in contact with the housing. If the housing were not grounded, the voltage on the housing could equal the voltage of the power source, and a person touching the housing would be exposed to this voltage. Grounding the equipment reduces the shock hazard. Conductors used to ground equipment are called grounding conductors. On an extension or portable tool cord, this is the green insulated conductor. Portable equipment such as power tools that are identified as "double insulated" need not have a grounding conductor in the attachment cord. These items have a basic (functional) insulation system and a supplemental (protective)

3.G.3 a. (cont'd) insulation system, with the two insulation systems physically separated so that they are not simultaneously subjected to the same deteriorating influences.

The second application is the intentional grounding of a single pole or terminal of the power supply of an electrical distribution system. This is accomplished by connecting a low resistance conductor from the pole to the ground (the hull).

The purpose of grounding one of the conductors is to limit the voltage that the system can be subjected to under certain fault conditions. Grounding can also be accomplished through a resistor (resistance grounding) or through an inductor (inductive grounding). In these methods, the resistor or inductor is used to limit the line-to-ground fault current; these require special considerations and analysis.

It is important that a grounded system have only a single point of connection to the hull, regardless of the number of power sources, and that it be accessible for inspection. Multiple grounding points could create potentially dangerous and damaging circulating currents through the hull. The neutral of each generation and distribution system must be grounded at the generator switchboard, except for the neutral of an emergency power generation system. This must have no direct connection to ground at the emergency switchboard. The emergency switchboard neutral bus must be permanently connected to the neutral bus on the main switchboard, and there must not be any fuse, switch, or circuit breaker that opens the neutral conductor of the bus-tie feeder.

Grounded distribution systems of less than 3000 volts line-to-line are prohibited on tank vessels by SOLAS. The concern is that fault currents going through the hull may cross discontinuities, such as riveted joints, ladders, etc., and there may be an arc and subsequent ignition of flammable vapors. Systems greater than 3000 volts may be grounded provided any resultant fault current would not flow through the cargo tank area. This is usually not a problem as electrical loads operating at these voltages (other than possibly a bow thruster) are typically not located separate from the machinery space.

On some merchant vessels, the electrical distribution systems are ungrounded. There is no intentional connection to ground. This is primarily for circuit reliability. The electrical system can sustain damage that "grounds" one of the conductors and still function (i.e. provide continuity of service).

There is often the assumption that a person can contact an energized conductor in an ungrounded system, and not receive an electric shock since there is no return path for the current to flow back to the distribution system. Such an assumption can lead to fatal consequences. In practical applications, there is always a return path, and a system is always "grounded" to a certain extent. Paths exist through deteriorated or damaged insulation, and moisture, salt and other contaminants that are ever present. The issue is one of "degree." In ungrounded alternating current systems there is always a capacitance between conductors and between conductors and ground.

3.G.3 a. (cont'd) This impedance can effectively "ground" an intentionally ungrounded system.

The third application is the grounding of a power supply and an electrical load such that the hull is used as a normal current-carrying conductor. This is commonly referred to as "hull return" and is prohibited on vessels except for systems listed in 46 CFR 111.05-11. Acceptable examples include impressed current cathodic protection systems and limited and locally grounded systems such as engine cranking batteries. Insulation level monitoring systems and welding systems (on other than tank vessels) may also use the hull as a current-carrying conductor. One of the problems with hull return pertains to galvanic corrosion. Where the hull current passes through a welded joint or a joint of dissimilar metals, corrosion can occur.

b. Ground Detection (46 CFR 111.05-21, 23). Grounds can be a source of fire and electric shock. In an ungrounded system, a single ground has no appreciable effect on current flow. However, if low resistance grounds occur on conductors of different potentials, very large currents can result. In a grounded system, a single low impedance ground can result in large fault currents. To provide for the detection of grounds, the regulations require that ground detection means be provided for each electric propulsion system, each ship's service power system, each lighting system, and each power or lighting system that is isolated from the ship's service power and lighting system by transformers, motor generator sets, or other device. This indication need not be part of the main switchboard but should be co-located with the switchboard (i.e. at the engineering control console adjacent to the main switchboard). The indication may be accomplished by a single bank of lights with a switch which selects the power system to be tested, or by a set of ground detector lights for each system monitored.

In an ungrounded three-phase system, ground detection lamps are used. The ground lamps are connected in a "wye" configuration with the common point grounded. A normally-closed switch is provided in the ground connection. This is illustrated in the figure below.

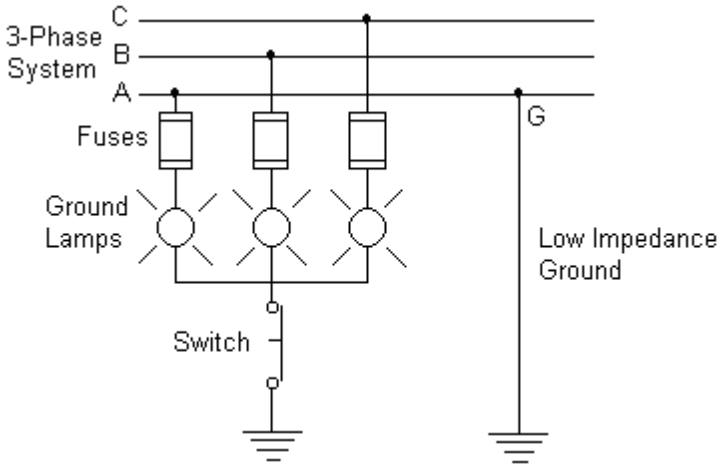

If no ground is present on the system, each lamp will see one-half of the phase-to-phase voltage and will be illuminated at equal

3.G.3 b. (cont'd) intensity. If line "A" is grounded at point "G" by a low impedance ground, the lamp connected to line "A" will be shunted out and the lamp will be dark. The other two lamps will be energized at phase-to-phase voltage and will be brighter than usual. If a low resistance ground occurs on any line, the lamp connected to that line will be dimmed slightly and the other two lamps will brighten slightly The switch is provided to aid in detecting high impedance grounds that produce only a slight voltage shift. When the ground connection is opened by the switch, the voltage across each lamp returns to normal (phase voltage) and each lamp will have the same intensity. This provides a means to observe contrast between normal voltage and voltages that have shifted slightly. Lamp wattages of between 5 and 25 watts when operating at one-half phase-to-phase voltage (without a ground present) have been found to perform adequately, giving a viewer adequate illumination contrast for high impedance grounds. Should a solid ground occur, the lamps will still be within their rating and will not be damaged. For lesser grounds, the lumen output of the lamps will vary approximately proportional to the cube of the voltage. This exponential change in lamp brightness (increasing in two and decreasing in one) provides the necessary contrast.

On grounded dual voltage systems, an ammeter is used for ground detection. This ammeter is connected in series with the connection between the neutral and the vessel ground. To provide for the detection of high impedance grounds with correspondingly low ground currents, the regulations specify an ammeter scale of 0 to 10 amperes. However, the meter must be able to withstand, without damage, much higher ground currents, typically around 500 amperes This feature is usually provided by the use of a special transducer such as a saturable reactor in the meter circuit. Some ammeters use a non-linear scale to provide for ease in detecting movement at low current values. An example of this is shown in the figure below.

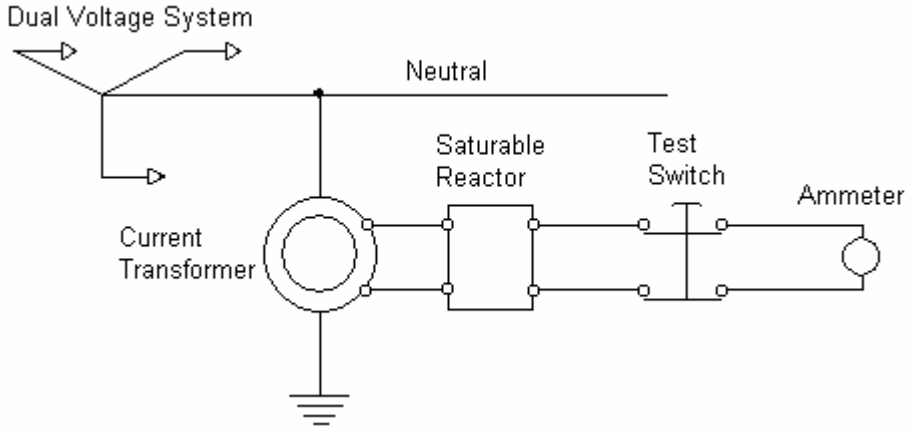

Other types of solid-state devices are becoming available that can provide ground detection. They should not be prohibited, but should be evaluated to determine that they are functionally equivalent to the lights and ammeters historically used. Some systems also include a visual and/or audible alarm at a preset level of ground current.

3.G.3 c. Overcurrent (46 CFR 111.05-37). In the case of over current devices that are heat dependent, such as a fuse or the thermal trip on a circuit breaker, temperature is important, as it relates to the time it takes to remove an undesirable condition (overload). A device in a temperature lower than it is rated for will be slightly slower to trip on overload. If the temperature is higher, it will trip more quickly. In specific instances, either of these could be the undesired event. In the fault current range, the time effect is negligible. It should also be noted that many of these mass produced devices do not perform uniformly.

4. Power Supply (46 CFR 111.10).

a. Capacity. Determining the number and size of generating sets needed for a vessel requires a careful analysis of the normal and maximum demands during various phases of operation, including at sea, maneuvering, and in port.

Also, any special or unique operational considerations should be addressed. It is the intent of the regulations to ensure all normal "ship's service" loads can be kept energized with the largest generator out of operation, and without use of the emergency generator. It is not the intent of the regulations to ensure that the vessel can continue to perform an industrial function, such as drilling or dredging, with a generator in reserve. Ship's service loads are defined in detail in 46 CFR 111.10-1.

Of special note is that refrigerated container loads are considered "ship's service" loads. This is so cargo preservation attempts will not require sacrificing the more traditional ship's service loads should an operating generator fail. Other arrangements, such as a separate generating system, or a reefer load-shedding/load management system can provide an equivalent level of safety.

Procedures for conducting a thorough load analysis, typical ship's service operating load factors, and a sample load analysis are contained in section 3.B.2.b(3)(d) of this chapter.

b. Main Engine Dependent Generators. The most commonly used prime movers for ship's service generators are dedicated diesel engines and steam turbines supplied by the propulsion boiler(s). However, due to escalating fuel costs, owners and designers are always looking for less expensive means to provide the necessary electric power. Shaft-driven generators, power take-off (PTO) generators, and waste heat driven turbogenerators offer flexibility and greater efficiency. In many cases, however, they are constrained to certain main engine speed and power operating ranges.

SOLAS states that the arrangements of the ship's main source of power shall be such that the ships service loads can be maintained regardless of the speed and direction of the main propelling engines or shafting. This is reflected in 46 CFR 111.10-4(b) and (c), which require that ship's service electrical power be provided continuously, regardless of propulsion shaft speed or direction. In the worst case, this means that an "engine stop" or "full astern" command on the bridge propulsion control lever while operating at the

3.G.4 b. (cont'd) minimum engine speed for full generator output must not result in interruption of ship's service power.

Generators may be mechanically driven by the main diesel engine directly by the line shaft, by means of a PTO from the engine, or through intermediate gearing. Because changes in main engine speed would normally result in changes in the generator speed (and, therefore, frequency), a variety of methods has been developed to maintain constant frequency. These include the operation of the main diesel engine at a constant speed with the pitch of a controllable pitch propeller independently controlled, the use of a constant speed gear drive to give a constant output shaft speed over a range of input shaft speeds, and the application of a static rectifier-inverter combination to transform variable frequency AC to constant frequency AC.

Waste heat energy from the main diesel engine can be recovered in an exhaust gas boiler to generate low pressure steam to drive a turbogenerator. This generator can be operated only when sufficient exhaust heat is available, so start-up and shutdown are usually manually initiated. To optimize the recovery of exhaust heat, a generator loading control system may be used with load-sharing and speed (governor) controls to maximize turbogenerator loading when operating in parallel with other generators. Any main engine or waste heat driven generator which is not capable of providing power under all operating conditions, including maneuvering and in port, cannot be counted towards the required ship's service generating capacity. Such a generator may however, be provided as a supplemental generator. In any case, one of the required generators must be independent of the main propelling engines and shafting.

Where a supplemental generator is used to supply power for ship's service loads, it must provide a continuous and uninterrupted source of power under normal operational conditions, including any speed change or throttle movement. Automatic start-up of and load transfer to a standby diesel generator must be provided to prevent power interruptions when conditions are such that the supplemental generator is unable to supply the ship's service load. A finite time is required to start, synchronize, and parallel a standby diesel generator, and the main engine-driven generator must remain on line until the standby generator has assumed the load. A signal from the propulsion control and a shaft speed signal may be used to automatically initiate connection of the standby generator. Once a throttle change has been made, the time required for the main engine to slow to the point where the generator cannot supply the ship's service load depends on the original speed as well as the coast-down characteristics of the hull and propulsion plant. In many cases, the coast-down time for a two-stroke slow speed main diesel engine is long enough to allow the standby generator to assume the load without power interruption. If it is not, the disconnection of the shaft or PTO generator must be delayed. To prevent power interruptions from occurring, the speed of the main engine may be automatically held at or above the lower operating threshold for generator operation for approximately 10 seconds. This delay, automatically activated only when needed, is considered to be comparable to the time necessary for crew response to maneuvering bells in a manned engineroom. Since the typical main engine dependent generator installation employs

3.G.4 b. (cont'd) automated start and synchronization controls for the standby generator(s), careful design and detailed review to the requirements of 46 CFR Part 62 is generally required to ensure compliance with 46 CFR 111.10-4.

c. Ship's Service Supply Transformers. The regulations state that where transformers are used to supply the ship's service distribution system, there must be at least two separate ship's service supply systems. The intent is to duplicate supplies to the ship's service switchboard, as is done with generating sets. This would normally exist on a vessel generating at a higher voltage, such as 600 or 4160 volts. It is not the intent, nor is it required, that transformers fed by the ship's service switchboard, such as 460/120 volt transformers be duplicated.

Each transformer must have the capacity to supply the ship's service loads. The duplicated supply should consist of transformers, overcurrent devices, and cables. Automatic changeover upon a transformer failure is not required. It could be inferred from the transformer/generator analogy of SOLAS 11-1/45, that automatic transformer transfer is required by the SOLAS 11-1/53 requirements for automatic starting and connection of a stand-by generator. That analogy has, however, not been applied to transformers since the precise wording of Reg. 53 addresses generators, and not "essential parts of the electric supply system." Additionally, the reliability and availability of a "static" transformer, and its cable and overcurrent device is much better than a rotating generator, its prime-mover and control system. Transformer faults are rare, and the requirement for duplication is considered from a "come-home" standpoint. (This is similar to the requirement for a split bus arrangement on a ship with a large electrical system. There is no requirement to automatically disconnect switchboard sections and attempt to maintain power upon a switchboard fault. The requirement for splitting the bus is to provide the capability for onboard engineers to be able to isolate a fault and restore limited service.)

5. Generator Construction and Protection (46 CFR 111.12). Generator excitation, construction, and voltage regulation, should meet ABS Rules as outlined in 46 CFR 111.12-1. Generator protection, provided by power circuit breakers, should meet the specific requirements in the Electrical Engineering Regulations. There are many types of circuit breaker trips: inverse time, instantaneous, reverse-power/current, under and overvoltage, ground fault, under and over frequency, and trips operated by auxiliary contacts. 46 CFR 111.12-11 specifies the required trips for generator circuit breakers. The inverse time trips are devices that open the circuit breaker in a time that relates to the amount of overcurrent. The greater the overcurrent, the quicker they open the circuit. They are adjustable and should be set so that downstream or feeder breakers have had the opportunity to open and clear faults on the feeder circuits. Instantaneous trips are quick-acting devices that have no intentional time delay in opening the circuit breaker under high-level currents. Instantaneous trips are not permitted for generators unless three or more generators can be paralleled. This is to provide continuity of service under a fault condition. Reverse-power or reverse current trips are required where generators can be paralleled. These are quick-acting devices that will open the circuit of a generator that has current from other generators feeding into it. Additional information is provided on circuit breakers.

3.G 5. (cont'd) Generator overcurrent protective devices must be on the ship's service switchboard and the switchboard and a generator must be in the same space. An adjacent dedicated switchgear and SCR room on a MODU, and a control room inside the machinery casing are not considered separate spaces even though they may be separated by a watertight bulkhead. In unusual installations where the switchboard and a generator are separated by a bulkhead or enclosure that is not required for either subdivision or fire protection purposes, the spaces may also be treated as a single space for the purpose of this requirement. Additional precautions may be needed, such as current sensing at the generators that, upon sensing excessive overcurrent, removes excitation and shuts down the prime mover.

The Marine Engineering Regulations contain the requirements for prime movers in 46 CFR 58.10. Additional requirements for prime movers for emergency generators are found in 46 CFR 112.50, and are discussed later in section 3.G.19. Each diesel engine prime mover must have an overspeed device that is independent of the normal operating governor and is adjusted so that the speed cannot exceed the maximum rated speed by more than 15%. Additionally, the prime mover should automatically shut down upon loss of lubricating oil pressure to the generator bearings. These shutdowns should be tested at each inspection for certification.

6. Batteries and Battery Installations (46 CFR 111.15).

a. Electrical Storage Batteries. Electrical storage batteries have many shipboard applications, including engine starting, temporary or final emergency power source, and backup power supply. In general, the requirements of 46 CFR Subpart 111.15 are applicable to all such battery installations. Note that storage batteries used for required emergency power and lighting systems must comply with Subpart 112.55.

b. Battery types & Equivalencies. Battery types & equivalencies: Batteries may be classified according to the chemical composition of their plates and/or the type of electrolyte solution -- thus the terms lead-acid, alkaline, nickel-cadmium (Ni Cad), etc. A nickel-cadmium battery is a particular type of alkaline (electrolyte) battery. Storage batteries other than the lead-acid or alkaline type may be accepted provided they do not spill electrolyte when the battery is inclined at 30 degrees from the vertical, are suitably constructed to comply with 46 CFR 111.15-2(a), and generate hydrogen at a rate not to exceed that of an equivalent lead-acid battery installation under worst case conditions.

c. Gel-Cell Batteries. Gel-Cell Batteries may be preferable due to lower maintenance than wet-cell batteries. Since there is no need to check and add electrolyte to the Gel-Cell batteries, as is required with the wet-cell batteries, the use of Gel-cell batteries reduces the exposure of personnel to this potentially hazardous maintenance activity. Additionally, storage of the electrolyte, a hazardous material, is eliminated. The gel-cell battery requires extra care with regard to charging and is typically charged with an automatic temperature-sensing, voltage-regulating battery charger. Caution must be observed when determining the correct charging system as improper charging can cause damage to the battery. Failure of a gel-cell battery installed in an emergency or vital system such as an emergency generator could have an adverse operational impact.

3.G.6 d. Hazardous Locations. The Electrical Engineering Regulations categorize battery installations into one of three types, based upon the power output of the battery charger and the corresponding amount of highly flammable hydrogen gas, which may be generated. Each room, locker, and box containing storage batteries must be arranged or ventilated to prevent the accumulation of this gas. Large battery installations may be located only in a dedicated battery room or in a box on deck. Such a battery room is considered to be a hazardous location; only electrical equipment approved for use in a Class I, Division 1, Group B location may be used in such a battery room.

The regulations do not define the hazardous area as extending to a radius of 10 feet (3 meters) from doors, hatches, or other openings into the battery room. However, the use of explosion proof or intrinsically safe electrical equipment or apparatus and the avoidance of ignition sources near such openings are recommended.

Where flammable gases or vapors may be present, such as on the drill floor of a Mobile Offshore Drilling Unit or in the pumproom of a tankship, special precautions must be taken to ensure that electrical equipment is not a source of ignition. Subpart 111.105 of the Electrical Engineering Regulations contains the requirements for electrical equipment and wiring in locations where fire or explosion hazards may exist. In these locations, it is necessary to exercise more than ordinary care with regard to the selection, installation, and maintenance of electrical equipment and wiring. A primary objective of design should be to minimize the amount of electrical equipment installed in hazardous locations. Through the exercise of ingenuity in the layout of electrical installations for hazardous locations, it is frequently possible to locate much of the equipment in less hazardous or in non-hazardous areas and thus reduce the amount of special equipment and installations required.

The Electrical Engineering Regulations incorporate by reference Articles 500 through 505 of the National Electrical Code, with the exceptions listed in 46 CFR 111.105-3. Non-explosion-proof equipment can be allowed in accordance with the NEC.

The Electrical Engineering Regulations also incorporate by reference the IEC 60079-XX "Electrical apparatus for explosive gas atmospheres" series of standards. The big difference between the two referenced ways of classifying a hazardous location is the use of Zones (IEC) and Divisions (NEC). In 1998, the NEC Article 505 adopted the alternative way to classify hazardous areas and included Class I Zones 0, 1 & 2 locations.

The obvious main difference between the Zone and Division systems are the wiring practices and the more prevalent use of plastics in the Zone system. Another notable difference is the size of the equipment used in hazardous areas. For example, NEMA starters are larger and built for easy selection, use and maintenance. IEC starters, on the other hand, are built smaller, minimizing the use of materials but requiring much more attention to selecting the correct starter for the specific application.

e. Classification of Battery Installations. The classification of battery installations based upon the power output of the charger may

3.G.6 e. (cont'd) not be appropriate for some types of batteries (such as gel-cells) which generate very little to no hydrogen gas. In such cases, the quantity of gas generated should be compared to the amount released by lead-acid batteries to determine whether the installation should is large, moderate, or small. The battery manufacturer, designer, or shipbuilder should provide this comparison to the USCG.

Sealed batteries, which release gas only when a relief valve opens following an over-voltage charge, may also be accepted. However, their installation must consider the over-charge condition, and allow released gas to be safely dissipated. The lining requirement of 46 CFR 111.15-5(g) allows the acceptance of plastic battery trays and liners certified by the manufacturer as resistant to the corrosive effects of the battery electrolyte. Battery chargers that meet UL 1564 (Industrial Chargers) plus the marine supplement to UL 1236 may be accepted as equivalent to those meeting UL 1236.

f. Emergency Power Batteries. Automotive-type batteries are not suitable for emergency power applications, as indicated in NEC Article 700-12. Automotive batteries are designed for frequent, short duration, high current loading; emergency power systems usually operate less frequently, for longer periods, at lower current levels. Automotive batteries also have a shorter life (3 - 5 years) than lead-acid storage batteries designed for use in emergency power systems (15 - 20 years). Storage batteries for emergency power service have either a threaded stud or a rectangular blade for connection of a bus link. They usually have external cell connectors. Automotive batteries have either side terminals that can accept a threaded bolt, or top round posts for an automotive battery cable.

7. Transformers (46 CFR 111.20).

a. Sectionalized And Redundant Transformers (46 CFR 111.10-9). Sectionalized buses increase the ability to provide ship's service power in the event of a casualty to part of the switchboard. On a single voltage level system (i.e., where generated voltage is the ship's service switchboard voltage), the devices used to connect the sections of the buses must be manually operable. In a dual level system, (i.e., in which the generators connect to a medium-voltage bus which in turn supplies the low-voltage ship's service switchboard) at least two transformers or transformer banks are required by 46 CFR 111.10-9. If the medium-voltage bus is required to be sectionalized and the total capacity of these transformers exceeds 3000 KW, the low-voltage ship's service switchboard must also be subdivided. On a dual level system, automatic control of the sectionalizing may be permitted when it is part of a load management system allowing for increased system flexibility.

b. Transformers – Protection (46 CFR 111.20-15). The overcurrent protection for each transformer is required by 46 CFR 111.20-15 to meet Article 450 of the NEC or IEC 60092-303. The transformer overcurrent protection specified in Section 450-3 is intended to protect the transformer alone; the primary and secondary conductors may not be adequately protected. Be careful to ensure that conductor protection is provided. Note that where the primary feeder to the transformer is provided with overcurrent protective devices that are set per section 450-3, it is not necessary to install an individual

3.G.7 b. (cont'd) overcurrent device at the transformer. The primary conductors must then be sized so that their ampacity is greater than or equal to the rating or setting of the primary overcurrent protective device(s); see 46 CFR 111.50-3(a), (b), and 111.50-5(a). Secondary conductors supplied by a transformer must be protected in accordance with their ampacity. The secondary conductors of a single voltage single-phase transformer which satisfies the requirements of 46 CFR 111.50-5(a)(4) do not require overcurrent protection at the supply (the transformer) to the secondary side conductors. Aluminum-wound transformers are acceptable. They should be fully encapsulated by the manufacturer and all connections should be made in accordance with the guidelines for aluminum current-carrying parts in section 3.G.8 of this guide. See the next section for full load current ratings for single-phase and three-phase transformers.

c. Miscellaneous Tables.

Current Rating, Rectangular Bus Bars on Edge, 50 C Rise, IEEE 45-1983, A27 Single Bars in Parallel, Copper		
SIZE (inches)	DC	AC, 60HZ
3/4 x 1/8	250	250
1 x 1/8	330	330
1-1/2 x 1/8	500	500
1-1/2 x 3/16	580	570
2 x 3/16	760	745
1 x 1/4	490	480
1-1/2 x 1/4	685	675
2 x 1/4	920	900
3 x 1/4	1380	1280
4 x 1/4	1730	1650
5 x 1/4	2125	2000
6 x 1/4	2475	2300
8 x 1/4	3175	2875

Minimum Switchboard Spacing (inches)			
	LIVE PARTS, OPP. POLARITY,		BETWEEN LIVE PARTS & GROUNDED
Voltage	Over Surface	Thru air	Dead metal
125V or less	3/4	1/2	1/2
126V - 250V	1 - 1/4	3/4	1/2
251V - 600V	2	1	1

From NEC Table 384-26

Neutral Grounding Conductors, AC Systems	
A.W.G. OF LARGEST GENERATOR CONDUCTOR OR EQUIVALENT FOR PARALLEL	A.W.G. OF GROUND CONDUCTOR
Up to #2	#8
#2 - #0	#6
#0 - 3/0	#4
3/0 - 350 MCM	#2
350 MCM - 600 MCM	#1
600 MCM - 1100 MCM	2/0
Greater than 1100 MCM	3/0

See 46 CFR 111.05-31(b).

3.G.7.c (cont'd)

Generator Continuous Full Load Ampere Ratings.													
3 - Phase 0.8 Power Factor													
		115%		115%		115%		115%		115%		115%	
KW	KVA	208V	FLA	230V	FLA	240V	FLA	460V	FLA	480V	FLA	600V	FLA
5.0	6.3	17.5	20	15.8	18	15.2	17	7.9	9	7.6	9	6.1	7
7.5	9.4	26.1	30	23.6	27	22.6	26	11.8	14	11.3	13	9.0	10
10.0	12.5	34.7	40	31.4	36	30.1	35	15.7	18	15.0	17	12.0	14
15.0	18.7	52.0	60	47.0	54	45.0	52	23.5	27	22.5	26	18.0	21
20.0	25	69.4	80	62.8	72	60.1	69	31.4	36	30.1	35	24.1	28
25.0	31.3	87.0	100	78.6	90	75.3	87	39.1	45	37.6	43	30.1	35
30.0	37.5	104.1	120	94.1	108	90.2	104	47.1	54	45.1	52	36.1	42
35.0	50.0	138.8	160	125.5	144	120.3	138	62.7	72	60.1	69	48.1	55
40.0	62.5	173.5	200	156.9	180	150.3	173	78.4	90	75.2	86	61.1	70
45.0	75.0	208.2	239	188.3	217	180.4	207	94.1	108	90.2	104	72.2	83
50.0	93.8	260.4	300	235.4	271	225.6	259	117.7	135	112.8	130	90.3	104
60.0	125.0	347.0	399	313.8	361	300.7	346	156.9	180	150.4	173	120.3	138
75.0	156.0	433.0	498	391.6	450	375.3	432	195.8	225	187.6	216	150.1	173
80.0	187.0	519.1	597	469.4	540	449.8	517	234.7	270	224.9	259	179.9	207
100.0	219.0	607.9	699	549.6	632	526.7	606	274.8	316	263.3	303	210.7	242
125.0	250.0	694.0	798	627.6	722	601.4	692	313.8	361	300.7	346	240.6	277
150.0	312.0	866.1	996	783.2	900	750.5	863	391.6	450	375.3	432	300.2	345
175.0	375.0	1040.1	1196	941.3	1082	902.1	1037	470.7	541	451.1	519	361.0	415

Notes:
(1) Generator cables shall be capable of carrying at least 115 percent generator continuous F.L.A. (see 46 CFR 111.60-7).
(2) Generator circuit breaker long time overcurrent trip shall not exceed 115 percent generator continuous F.L.A. (see 46 CFR 111.12-11).
(3) KW = KVA * PF
(4) Amperes = $\frac{\text{KVA x 1000}}{\text{Volts x 1.732}}$

Transformer Full Load Currents.						
3-Phase Transformers Voltage (Line to Line)						
KVA Rating	208	240	480	800	2400	4180
3	8.3	7.2	3.6	2.9	0.72	0.415
6	16.6	14.4	7.2	5.8	1.44	0.83
9	25	21.6	10.8	8.7	2.16	1.25
15	41.6	36.0	18.0	14.4	3.6	2.1
30	83	72	36	29	7.2	4.15
45	125	108	54	43	10.8	5.25
75	208	180	90	72	18	10.4
100	278	241	120	96	24	13.9
150	416	360	180	144	36	20.8
225	625	542	271	217	54	31.2
300	830	720	360	290	72	41.5
500	1390	1200	600	480	120	69.4
750	2080	1800	900	720	180	104
1000	2775	2400	1200	960	240	139
1500	4150	3600	1800	1440	360	208
2000	5550	4800	2400	1930	480	277
2500	6950	6000	3000	2400	600	346
5000	13900	12000	8000	4800	1200	694
7500	20800	18000	9000	7200	1800	1040
10000	27750	24000	12000	9600	2400	1366

3.G.7.c (cont'd)

For other KVA Ratings or Voltages : Amperes = $\frac{\text{KVA x 1000}}{\text{Volts x 1.732}}$

Full Load Currents.						
Single Pase Transformers Voltage						
KVA Rating	120	208	240	480	600	2400
1	8.34	4.8	4.16	2.08	1.67	0.42
3	25	14.4	12.5	6.25	5.0	1.25
5	41.7	24.0	20.8	10.4	8.35	2.08
7.5	62.5	36.1	31.2	15.6	12.5	3.12
10	83.4	48	41.6	20.8	16.7	4.16
15	125	72	62.5	31.2	25.0	6.25
25	208	120	104	52	41.7	10.4
37.5	312	180	156	78	62.5	15.6
50	417	240	208	104	83.5	20.8
75	625	361	312	156	125	31.2
100	834	480	416	208	167	41.6
125	1042	800	520	260	208	52.0
167.5	1396	805	698	349	279	70.0
200	1666	960	833	416	333	83.3
250	2080	1200	1040	520	417	104
333	2776	1600	1388	694	555	139
500	4170	2400	2080	1040	836	208

For other KVA Ratings or Voltages : Amperes = $\frac{\text{KVA x 1000}}{\text{Volts}}$

8. Switchboards (46 CFR 111.30 - 25 & 111.30-27).

a. Location. SOLAS II-1/42.1.3 and 43.1.3 and 46 CFR 112.05-5(e) all state that the emergency generator room and a category A machinery space should not be adjoining, except where other arrangement is not practicable. Note that the CFR specifies the spaces will not be "adjoining", SOLAS requires not "contiguous", both indicating the spaces will not border each other horizontally or vertically. The intent is to maintain the integrity of the emergency electrical distribution system if there is a fire, flooding, or other casualty in the main machinery space. When the arrangement has been shown to be impractical, the installation of an A-60 bulkhead between the emergency generator room and the category A machinery space has been accepted. It is recommended that the steel bulkhead be insulated to A-60 on both sides. Any contiguous boundary between the emergency generator room and any category A machinery space or space containing the main source of electrical power, associated transforming equipment, if any, and the main switchboard must be avoided.

b. Removable Breakers (46 CFR 111.30-4). The Electrical Engineering Regulations require molded-case circuit breakers on switchboards to be mounted so that the breaker can be removed from the front without first unbolting the bus or cable connections or de-energizing the supply to the breaker. The intent of this requirement is to make possible the safe removal of a circuit breaker for repair or replacement without de-energizing other essential loads. This

3.G.8 b. (cont'd) requirement is for circuit breakers in ship's service switchboards; removable or draw-out breakers are not required for dedicated industrial switchboards, but are recommended for safety. Where the main ship's service bus is subdivided into two sections, a comparable level of safety can be provided by an arrangement where all circuits necessary for the safe navigation of the vessel can be supplied by either section of the bus. This would allow for de-energizing one section without the loss of essential loads. Note that although the Subchapter J requirement to sectionalize the main bus is not applicable to Mobile Offshore Drilling Units, self-propelled MODU's seeking an IMO MODU Code certificate must meet this requirement (MODU Code Chapter 7, Section 9).

c. Bus Bars (46 CFR 111.30-19). Each bus must be sized so its rating is not less than the capacity required in 46 CFR 111.30-19(a). [NOTE: Bus bars for motor control centers are to be rated per NEC 430-24.] Table A27 of IEEE Standard No. 45 (1983 edition, section 7.10 of IEEE 45 1998 edition) gives minimum bus bar sizes, based on the cross section and spacing required for the bus current rating and the allowable temperature rise.

Bus bars must be braced to withstand the mechanical strains imposed by inrush currents and the maximum available short-circuit current. These currents can generate electromagnetic fields of considerable magnitude. The mechanical forces resulting from these fields can bend the bus bars, shatter insulation, and physically tear the switchboard apart.

Switchboard manufacturers should indicate the fault current their boards are designed to withstand. The spacing between bus bars and bare metal parts within the switchboard must meet Section 384-26 of the National Electrical Code.

d. Aluminum Busbars. There has been continued interest in the use of aluminum as a bus bar material, due primarily to the relative costs of copper and aluminum. Both marine and shore industrial experience has shown that careful attention must be paid to materials, joint design, and quality of workmanship if unsatisfactory and unsafe aluminum bus bar installations are to be avoided. The switchboard regulations, in 46 CFR 111.30-19, refer to IEEE Standard No. 45 for bus bar installations Section 17.11 of IEEE-45 permits aluminum to be used in switchboards. The panelboard regulations are found in 46 CFR 111.40-1. Aluminum must only be used in applications and in a manner permitted by the regulations. Certain problems and properties associated with aluminum bus bars are discussed below. For vessels operating only in fresh water, the corrosion problem may be minimal; the other three problems are equally applicable to fresh water and saltwater service.

(1) Corrosion - Aluminum in contact with certain other metals, such as steel, forms a galvanic couple susceptible to accelerated corrosion in the marine environment. Aluminum alloys containing copper are particularly subject to corrosion in a damp salt atmosphere, even when not in contact with a dissimilar metal.

(2) Oxide Build-up - Most aluminum alloys form a hard, inert oxide coat whenever a fresh surface is exposed to air. This layer of

3.G.8.d (2) (cont'd) aluminum oxide has a high electrical resistance and can create a hot spot at connection points.

(3) Creep - Aluminum exhibits a phenomenon known as creep, which is a plastic deformation that occurs at stresses below yield strength. Periodic tightening of many types of aluminum connections is required to prevent connections from becoming loose. If connections do become loose, the surface contact area is reduced, permitting the oxide coat to form. This, in turn, causes high-resistance hot spots.

(4) Thermal Properties –

(a) As the load increases, the bus bar temperature will increase and the bus bars will expand. The linear coefficient of thermal expansion of aluminum alloys is significantly larger than that for steel or copper. Provisions must be made in the design to account for these different expansion rates. High stresses can occur in aluminum-bodied connectors, especially when used with bolts of a dissimilar metal or which have thermal expansion characteristics different from those of the aluminum device.

(b) The thermal conductivity of aluminum, while alloy dependent, is approximately half that of copper. Heat is not conducted away from a hot spot in aluminum as quickly as with copper.

The use of aluminum bus bars in switchboards, large switchboard-type panelboards, and motor control centers are generally acceptable. The design and practices recommended below, or equivalents, should be considered. Aluminum bus bars are generally not suitable for use in panelboards and motor controllers. The small size and scattered locations of many panelboards and controllers may discourage the periodic inspections which should be made to detect unsafe deterioration of aluminum bus bars and connections. The following design and assembly recommendations will help ensure a satisfactory installation of aluminum bus bars: All aluminum current carrying parts should be made of alloy 6101 or other alloy with a maximum of 0.1 percent copper. In areas of contact, the bus bars, including any copper bars, should be plated with silver, nickel, or tin after all drilling has been completed. This plating should be performed at the manufacturer's facility and not in the field. Copper cable or wire should be connected to the aluminum bus using plated compression-type terminal connectors. Where aluminum bodied connectors and fittings are used, they should be packed with oxide-inhibitor paste. These fittings should be suitable for use on aluminum. A shrinkable sleeve should be used to seal the wire to the terminal connector. A generous amount of joint compound should be applied to all joint surfaces before assembly to seal out air and improve corrosion resistance. A bead of compound should appear all around the edges of each joint when the connection is tightened. Excess compound squeezed out of the joint may be left as is or removed. Abrasive joint compounds should not be used on flat-bar connections. A plated copper bar or plated copper terminal fitting may be connected to a plated aluminum bar. The connection should be made with a plated steel bolt, plated Belleville spring washers, and wide series plated steel washers.

3.G.8 d. (cont'd) The Belleville washer should be installed with the crown or neck against the nut or bolt head and the concave side bearing on the flat washer. The nut should be tightened until the Belleville washer is just flat. An aluminum-to-aluminum connection may be made with either plated aluminum or plated steel bolts. If steel bolts are used, the recommendations of the paragraph above should be followed. Aluminum bolts should be made of a high strength aluminum alloy. Aluminum bolts, nuts, and washers should be made of an alloy containing not more than 0.1 percent copper.

A plug-in type circuit breaker should not be directly connected to an aluminum bus. Circuit breakers or fused switches may be attached to an aluminum bus if a bolt or plug arrangement is used with joint preparation as described above. The plug-in type circuit breaker may be used with a copper bus feeder. A plated bus bar surface should not be wire brushed or treated with abrasive cleansers prior to assembly.

e. Shore Power (46 CFR 111.30). Electrical shore power connections are not required by the Electrical Engineering Regulations. Where provisions are made to use shore power, the connection boxes and switchgear must meet 46 CFR 111.83 and 111.30-25(f) for AC switchboards or 111.30-27(f) for DC switchboards. As an alternative to the standard shore power connection box, the use of military specification (MILSPEC) hardware is acceptable. The use of reverse-power or reverse-current relays should be considered when shore power is used extensively. In addition, interlocks are recommended to prevent the paralleling of shore power with the ship's generators.

9. Power Semiconductor Rectifier Systems (SCRs 46 CFR 111.33).

a. Introduction. The term SCR refers to the solid state equipment for the conversion of alternating current to direct current which has been called a silicon controlled rectifier, semiconductor controlled rectifier, and semiconductor rectifier. Many electric propulsion systems, thrusters, and pieces of drilling machinery use DC motors in order to obtain more precise speed control. SCR's are the most common means of converting the ship's service AC power to DC. Solid state SCR power converters offer the advantages of high efficiency and low maintenance (compared to motor-generator sets), but are sensitive to heat and humidity and are frequently located in suitably air-conditioned spaces.

Subpart 111.33 is applicable to any SCR used as part of the vessel's electrical power distribution system. Small SCR's, which form part of utilization equipment, such as a semiconductor rectifier battery charger, need not meet these regulations.

b. Requirements. The intent of the regulations is to ensure that the continuity of power to equipment supplied by SCR's is not jeopardized by unsuitable SCR design or installation. An adequate means of heat removal is the primary concern. Due to the criticality of the propulsion system to the safe navigation of the vessel, additional requirements apply to SCR's in electric propulsion systems; see 46 CFR 111.33-11.

c. Check-Off List. SCR System Check-Off List:

3.G.9.c (1) Meets the requirements of 46 CFR 111.33, and for a switchboard and/or electric propulsion installation. 46 CFR 111.30-11, -19, -21.
(2) Name plate data.
(3) Heat removal system.
(4) Cooling.
(5) lmmersed type with non-flammable liquid and no leakage with vessel inclined.
(6) Located away from heat sources.
(7) Temperature rating and operating range.
(8) Unrestricted air circulation if naturally cooled.
(9) Inlet air temperature within design limits.
(10) Loss of cooling shutdown.
(11) Inlet cooling water temperature.
(12) watertight or dripproof rectifier stack.
(13) Vent exhaust does not terminate in a hazardous area.
(14) Vent exhaust does not impinge on electrical equipment in enclosure.
(15) High temperature alarm or shutdown.
(16) SCR propulsion systems:
(a) Meet ABS Section 35.84.4 (1983).
(b) Current and current rate limiting circuit.
(c) Overcurrent protection.
(d) High temperature alarm set below shutdown temperature.
(e) Internal overcurrent device coordination.
(f) Blown fuse detection system.
(g) In dry place.
(17) SCR motor control:
(h) Overspeed trip; loss of load (series); loss of field (shunt).
(i) Shunt motor field excitation interlock.

10. Electrical Propulsion (46 CFR 111.35-1). The reference to the ABS "Rules for Building and Classing Steel Vessels" in 46 CFR 111.35-1 is out-of-date. Sections 4-8-5/5.5, 4-8-5/5.11, 4-8-5/5.13, 4-8-5/5.17.8(e), 4-8-5/5.17.9, and 4-8-5/5.17.10 of the 2003 edition of the ABS Rules may be used for guidance, or section 4/3.5.3 of ABS Rules for Building and Classing Mobile Offshore Drilling Units as appropriate. The general provisions of the SOLAS II-1/31, 49, and 52 are applicable to all propulsion arrangements, including electric propulsion.

11. Panelboards (46 CFR 111.40).

a. Ratings. The current rating of a panelboard must not be less than the feeder circuit capacity. To meet 46 CFR 111.40-15, the load on any overcurrent device in a panelboard must not exceed 80 percent of that device's rating if the normal load duration is 3 hours or more. This requirement does not apply, however, when the panelboard and the overcurrent device are rated for continuous duty at 100% of the rating.

b. Location. The main switchboard is required by 46 CFR 111.12-11(g) and 111.30 to be located in a machinery space that contains at least one ship’s service generator. This requirement is consistent with the SOLAS Amendments, Chapter 11-1, and Regulation 41.3. A control room that is located within the machinery casing or a dedicated switchgear and SCR room on a Mobile Offshore Drilling Unit, which is adjacent to and on the same level as the generator machinery space, is not

3.G.11 b. (cont'd) considered to be a separate space. Any such control room containing the main switchboard should, as far as practicable, be located so that the generator(s) are in sight and direct access to the generator(s) is facilitated. Each switchboard must be located in as dry a location as possible. Dripshields are required by 46 CFR 111.30-5(b). An equivalent installation is a switchboard that extends to the overhead and which cannot be subjected to leaks or falling objects. Piping above or adjacent to switchboards should be avoided. Piping which must be located in the vicinity of a switchboard must be provided with suitable spray shields and have only welded joints.

12. Circuit Protection Devices.

a. Purpose. Overcurrent devices, the two most common types being fuse and circuit breakers, offer protection against currents in excess of the rated current of equipment or the current-carrying capacity (ampacity) of a conductor. The purpose of properly coordinated overcurrent protection is to recognize, locate, and isolate faulted portions of the power system in order to minimize the damage to equipment and conductors, danger to personnel, and interruption of electrical power which may result from an overload, short circuit, or ground fault.

b. Circuit Breakers (46 CFR 111.54). Circuit breakers are devices which permit manual opening and closing of a circuit and which open the circuit automatically for a predetermined fault condition (usually overcurrent, but sometimes reverse power flow, under-voltage, or under-frequency) without damage to themselves when applied within their ratings. In effect, they are high current interrupting capacity switches with automatic trip elements. The circuit breakers most commonly found in marine applications respond to overcurrent, tripping when the current magnitude exceeds a specific value for a specific length of time. Low voltage (600 volts AC and below) circuit breakers are usually constructed with an integral overcurrent trip element within the circuit breaker housing.

In medium voltage systems, instrument transformers and protective relays separate from the circuit breakers are often used. Current transformers and voltage transformers are connected to the power system and allow the protective relays to "see" the conditions in the system without exposing them to the high system current and voltage levels. Protective relays interpret the information provided by the instrument transformers to discriminate between tolerable and fault/intolerable conditions. Upon detection of an intolerable condition, the protective relay initiates a tripping impulse to the circuit breaker, which isolates the faulted part of the power system.

When a circuit breaker opens an energized circuit, an arc is drawn between the opening contacts. This arc must be extinguished in order to interrupt the circuit. Circuit breakers are commonly classified according to the medium in which the contacts open. The common designations are air circuit breaker (which includes molded case circuit breakers), vacuum breakers, and SF6 (sulfur hexafluoride) breakers. Air circuit breakers are the most common type found in low voltage, relatively low current circuits for which the air around us serves as a suitable dielectric, preventing continued arcing between

3.G.12 b. (cont'd) the contacts after they have parted. Most air circuit breakers employ a bank of metal fins around the contacts to quickly extinguish arcs. As the arc passes between the fins it is split, cooled, and extinguished.

A molded-case circuit breaker is a type of air circuit breaker that is assembled as an integral unit in an insulated housing. Most molded-case breakers are provided with both a thermal trip for sustained overloads and a magnetic trip for instantaneous tripping on high fault currents. The operating mechanism that opens and closes the contacts includes a powerful spring that is charged when the breaker is closed. The trip actuator may have a number of inputs, but it must have a common mechanical output that releases the operating mechanism and uses the spring energy to open the contacts. Traditional circuit breakers have, for each pole a bimetallic thermal trip element and an electromagnetic (instantaneous) trip unit that initiate the mechanical motion of the trip bar which, in turn, releases the operating mechanism to open the contacts. Note that actuation of the common trip bar opens all the poles of the breaker simultaneously. This is illustrated in the figure below.

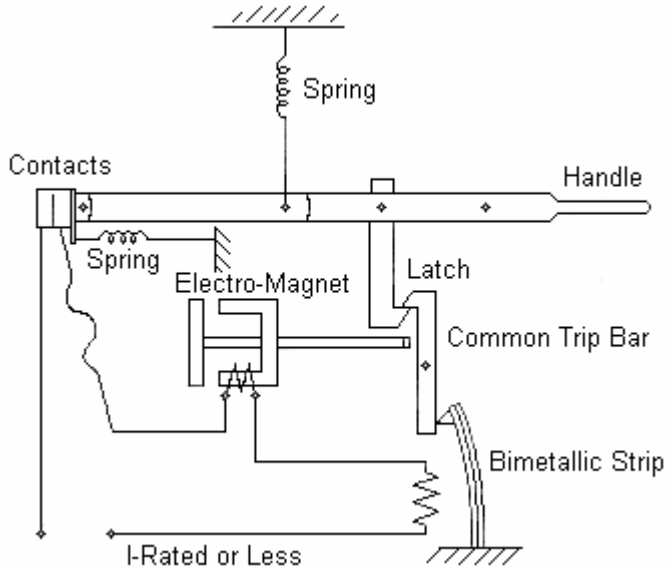

Electronic trip systems have been developed which replace the moving thermal-magnetic devices with solid-state electronic sensors and a single trip solenoid. By reducing the number of mechanical moving parts used to release the operating mechanism, electronic trip units can be made inherently more vibration and shock (impact) resistant. In addition, the electronic trip unit can be more closely adjusted and is less sensitive to ambient temperature because no motion of the trip actuator occurs until the trip signal is sent to the solenoid by the electronic circuit. With these advantages and the option for additional protection features, electronic trip units may soon replace thermal-magnetic elements for overcurrent protection.

The interrupting rating of a circuit breaker is the highest RMS (Root Mean Squared) current at rated voltage that the breaker is intended to interrupt in normal service. In practical circuits containing both resistance and reactance, most short-circuit currents will be

3.G.12 b. (cont'd) asymmetrical during the first few cycles after the short occurs. This asymmetry, due to a DC current component, will decay during the first few cycles until the current becomes symmetrical. The asymmetrical current, although it lasts only a short time, can greatly exceed the corresponding symmetrical fault current and the circuit breaker must be able to withstand the asymmetrical value. Under the ANSI standards presently applicable to low voltage fuses and circuit breakers, interrupting ratings are expressed in terms of the symmetrical RMS current to facilitate equipment comparison and selection. Circuit breakers meeting UL 489, although having only a symmetrical rating, are tested under conditions that evaluate their ability to withstand the "worst-case" asymmetrical current. It is not necessary to evaluate the device for asymmetrical current. Medium voltage circuit breakers have a first-cycle asymmetrical rating.

The continuous current rating of a circuit breaker is the continuous current the breaker will carry, without tripping, in the ambient temperature for which it is calibrated. Higher current will initiate tripping, though the current level must be sustained for some minimum length of time in order to actually trip the breaker. Circuit breakers trip on overcurrent according to a time-current response curve established by the manufacturer. A typical circuit breaker time-current characteristic curve is shown in the figure below.

Time-Current Response Curve

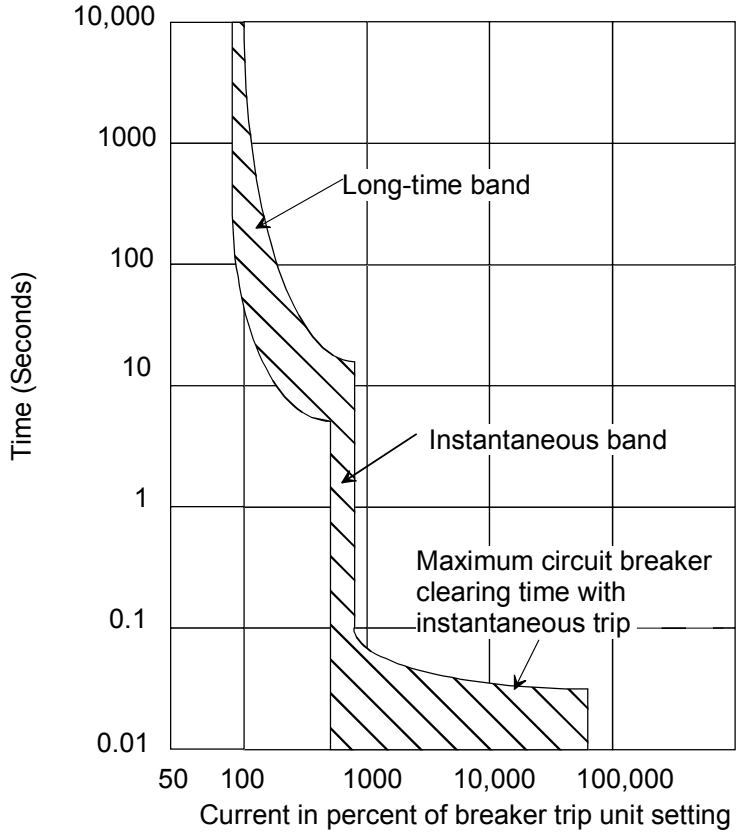

Circuit breakers that respond to overcurrent may have an inverse-time trip, an instantaneous trip, or both.

3.G.12 b. (cont'd) The term "instantaneous" here means only that no intentional time delay has been introduced, although some finite minimum time is required for any circuit breaker to interrupt a circuit. The curves indicate the length of time a particular current level must be sustained in order to trip a particular breaker. These and similar time-current curves for fuses are used in the process of coordinating the various overcurrent devices in the power system.

c. Fuses (46 CFR 111.53). Fuses are overcurrent protective devices containing a circuit-opening fusible element that is heated and severed by the passage of overcurrent. Fuses are among the few components required by the Electrical Engineering Regulations to be listed by an independent laboratory recognized by the Coast Guard (see 46 CFR 111.53-1(a)(3)). Fuses listed or labeled by a "nationally recognized testing laboratory" which has received recognition by OSHA are acceptable. Only "one-time" fuses may be used; renewable link cartridge-type fuses and Edison-base fuses (the screw-in type formerly used in residential fuse boxes) may not be used.

The interrupting rating (or capacity) refers to the highest RMS alternating current (or direct current depending upon the application), which the fuse is designed to interrupt without charring or cracking of the fuse tube or external arcing. The continuous current rating, or ampere rating, is the current level which the fuse will carry continuously without deterioration or excessive temperature rise. While fuses are often regarded as instantaneous circuit interrupting devices, they follow an extremely inverse time-circuit characteristic curve as shown below.

Fuse Characteristic Curve

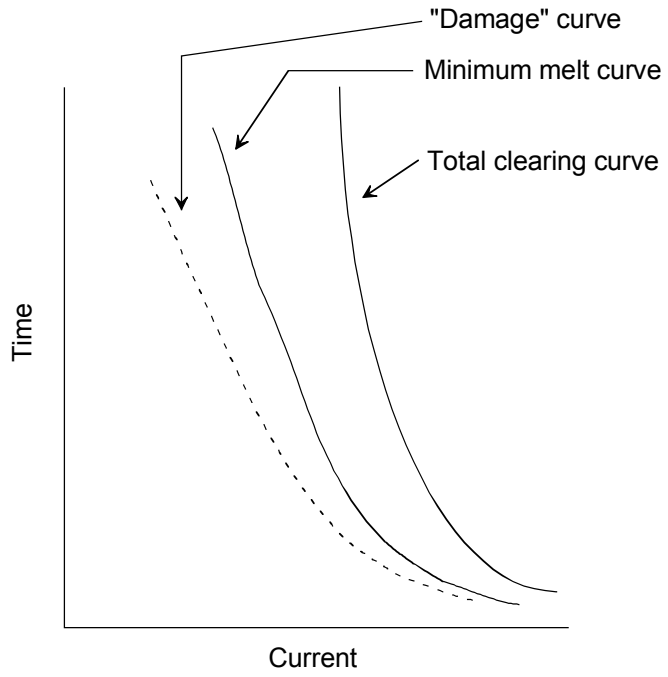

The total clearing time curve shows the maximum time, including arcing time and manufacturing tolerances, for the fusible element to open the circuit. The minimum melt curve represents the minimum time

3.G.12 c. (cont'd) required for the fusible element to begin to melt. An assumed "fuse damage," curve, approximated at 75% of the minimum melting curve, is used to provide a margin of safety so that applications avoid operation in the time-current band between the minimum melt curve and the total clearing curve, where current levels may cause thermal damage to the fuse without opening the circuit.

Current-limiting fuses are used to limit the magnitude and duration of extremely high fault currents during the total clearing time. Current limiting becomes effective only above a specific threshold current and interrupts the circuit in less than one-half cycle after occurrence of a fault, before the fault current reaches its maximum magnitude. Current-limiting fuses can be used in combination with circuit breakers to provide protection of the circuit breaker against high fault currents while retaining the time delay thermal and instantaneous magnetic trips for overcurrents of lower magnitude. The heat energy developed in a circuit during the fuse's clearing time, expressed in ampere-squared-seconds as I2t, is used as one measure of a fuse's current-limiting ability.

d. Applications. Overcurrent devices are generally required to be located at the point of supply of the circuit to be protected. The Electrical Engineering Regulations contain specific exceptions for overcurrent protection for generators, shore power cables, and transformer secondary circuits. Most conductors must be provided with overcurrent protection to protect against thermal damage caused by current in excess of the ampacity rating of the conductor.

This level of overcurrent protection is not desirable in circuits that would affect vessel operation if unexpectedly opened. Only short-circuit (not overload) protection, set not less than 500% of the expected current, is allowed in electric propulsion control, voltage regulator, and circuit breaker tripping control supply circuits. Exceptions are also made for applications such as motor circuits where a higher trip rating may be necessary to avoid tripping on motor inrush currents. Similarly, the overcurrent protection requirements for transformers contained in Article 450 of the National Electrical Code reflect the need to avoid improper tripping due to magnetizing inrush currents while providing adequate protection against sustained overcurrent. Due to the vital role of the steering system in the overall safety of a vessel, only limited fault-current protection is permitted in steering gear motor feeder, motor controller, control, and indicating and alarm circuits. It would be dangerous to "protect" a steering-gear motor against a moderate overload if, by tripping the motor during a maneuvering situation, steering were lost and the safety of the vessel jeopardized. The fault-current protection required for steering systems is intended to protect against fire; components of the system may be sacrificed in order to maintain control of the vessel for as long as possible in emergency situations. Steering gear and propulsion circuits must meet 46 CFR 111.70.

13. Fault Current Analysis & Coordination (46 CFR 111.52).

a. Purpose. To provide for an electrical system that minimizes disruption from fault conditions, a fault current analysis and a coordination study must be performed. The fault current analysis is

3.G.13 a. (cont'd) used to determine the magnitude of available fault current throughout the system so that interrupting devices can be selected to safely open that magnitude of current. The coordination study is performed so that the overcurrent devices can be selected or set so that the device immediately upstream from the fault trips before devices further upstream, thereby limiting the power loss to equipment downstream of the fault.

Theory: The available short-circuit current at a given location in the power system is defined as the maximum current which the power system, when operating with the maximum generating capacity that can operate in parallel and the largest "probable" motor load, can deliver to a zero-impedance (bolted) three-phase fault. The sources of short-circuit current are the generators, synchronous motors or synchronous condensers, and induction motors in operation in the system. The connected (spinning) motors function as generators for a short time after a fault occurs, contributing current towards the fault. The subtransient reactance should be used to determine the contribution of induction motors to the fault current during the first few cycles after the occurrence of the fault.

The current that will flow toward the fault depends upon the power available from the source(s), the voltage at the fault (assumed to be zero for a bolted three-phase fault), and the impedance of the circuit components such as transformers, conductors, and other equipment between the fault and the power source(s). Short-circuit currents should be assumed to be asymmetrical during the first few cycles after the short occurs. The asymmetry will be maximum at the instant the short circuit occurs; in practical circuits containing both resistance and reactance, the current generally becomes symmetrical after several cycles. The rms value of the available asymmetrical current must be within the interrupting rating of the overcurrent device. Note that this maximum asymmetrical current is the average of the three phases at a particular instant in time and is not the maximum current in any one phase.

Low-voltage air circuit breakers operate nearly instantaneously for currents near their interrupting ratings. These breakers must be capable of interrupting the maximum current which can flow in the circuit However, since the interrupting ratings of low voltage circuit breakers are only expressed in terms of symmetrical rms amperes, only the symmetrical fault current needs to be determined. The breaker frame size should be selected to have a (symmetrical) interrupting rating at least equal to the calculated symmetrical short-circuit current.

Calculation Procedures: There are a number of methods, of various degrees of accuracy and simplicity, which can be used to determine the available fault current. The Electrical Engineering Regulations permit the use of the assumptions contained in 46 CFR 111.52-3 in lieu of detailed short-circuit calculations for systems with an aggregate generating capacity below 1500 kilowatts.

This refers to the condition where the maximum number of generators which can operate in parallel are operating, generating the maximum power which can be supplied to the system. Detailed calculations may utilize any of the following methods:

3.G.13.a (1) Exact calculations using actual impedances and reactance's of the electrical equipment in the system.

(2) Estimated calculations using the Naval Sea Systems Command Design Data Sheet DDS 9620-3, "A.C. Fault Current Calculations."

(3) Estimated calculations using the International Electrotechnical Commission (IEC) Publication 363 (1972), "Short-circuit Current Evaluation with Special Regard to Rated Short-Circuit Capacity of Circuit Breakers in Installations in Ships."

(4) Estimated calculations using an established, commercially available fault current analysis procedure for utility or industrial applications, provided sufficient documentation regarding the procedure is submitted to verify its applicability. The estimated calculation procedure often contain certain "simplifying assumptions" regarding the reactance-to-resistance (X/R) ratios for generators, motors, and transformers, as well as the power factor and efficiency of induction motors. Low voltage systems are generally assumed to experience no voltage drop throughout the system. The maximum fault current is normally calculated at the first half-cycle. Simplifying assumptions may be used, consistent with good engineering judgment. The use of such assumptions must be noted in the calculations.

b. Coordination. Coordination, sometimes called selectivity, refers to the location of overcurrent protective devices in the system and the selection of proper trip ratings or settings and coordination time intervals so that only the smallest practicable portion of the power system will be isolated following a fault. The protection system can be viewed as a set of overlapping zones of protection with each zone encompassing a segment of the power system including at least one circuit breaker or fuse, as shown in the figure below.

Protection System Zones

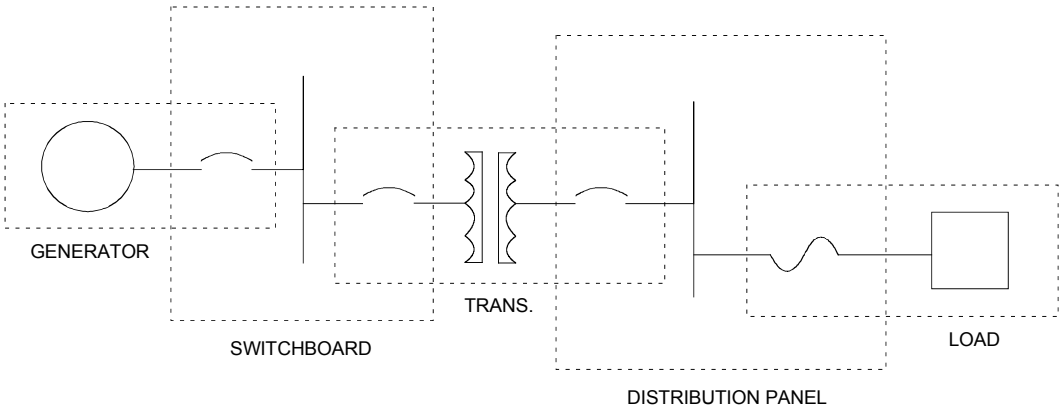

In a properly coordinated radial system, the first circuit interrupting device on the source side of the fault should respond (by opening the circuit) the fastest, so that no other interrupting devices open and maximum continuity of power is provided to the remainder of the system. Each circuit-interrupting device should

3.G.13 b. (cont'd) provide backup protection for the interrupting devices downstream of it; that is, each interrupting device should be able to open the circuit for any fault that the next downstream device fails to clear, but only after allowing sufficient time for the downstream device to act. The coordination time interval is the time difference between the slowest operating time for the primary protection and the fastest time for the backup protection.

Proper coordination of protective devices requires an analysis of the fault currents available at the various points in the system, selection of the circuit breakers and fuses so that each will clear the anticipated fault currents in an acceptable time, and verification that each breaker or fuse provides adequate backup protection for the circuit interrupters downstream. In general, "instantaneous" or extremely inverse characteristic circuit breakers, or fuses, are used at loads (the farthest downstream devices) with progressively less inverse time-current characteristic breakers employed as one approaches the source(s). An exception is the requirement of 111.12-11(c)(2) for an instantaneous trip on the generator circuit breaker where three or more generators can be paralleled.

Coordination of molded case circuit breakers having thermal magnetic trips is sometimes difficult. In view of this, non-selective overcurrent protection may be accepted for circuits that supply only non-vital equipment. A fault on such circuits must not affect the continuity of electric power to equipment vital to the propulsion, control, or safety of the vessel.

14. Wire and Cable (46 CFR 111.60).

a. General. A wire is a conductor with functional insulation only, for use inside an enclosure. A cable consists of one or more insulated conductors provided with a protective covering of either a watertight metallic sheath or an impervious non-metallic sheath compatible with the insulation. Most shipboard wiring is accomplished using multiconductor cable.

Wire and conduit may be used for shipboard wiring. Where it is used, the installation requirements of the NEC should be followed (i.e., requirements for sizes and fill, bends and bending methods, couplings and connectors, and support methods and locations), and the additional aspects of a marine installation (corrosion, moisture, watertight bulkhead penetrations, and flexing) should be addressed. Additionally, the wire must meet the requirements of 46 CFR Subpart 111.60 for insulated conductors.

The design emphasis for merchant vessel cable has historically been placed on the harsh ship construction environment (nearby welding, pulling cable through bulkheads, and subjecting cable to constant mechanical abuse), as well as on the shipboard operating environment (clamped assemblies, large cable bundles, and exposure to a wide range of temperatures, high humidity, and oil). Additional considerations for vessels have included longitudinal water propagation resistance, overload conditions, and circuit integrity under fire conditions.

3.G.14 b. Types of Cable. The regulations for the construction of shipboard electrical cable are contained in 46 CFR 111.60. A current copy of the regulations should be referenced as types of acceptable cable may be changing.

For cables listed by UL for 90°C, use the (E,X) column ampacities. If UL listed for 75°C, use the (T) column ampacities. These ampacities should be used regardless of the actual insulation composition of the cables. The ampacities of cables having a UL shipboard listing may be found in Table 9.1, of IEEE-45 (1998 edition).

All UL cable listings for shipboard applications must be for a maximum conductor temperature of 100°C or less. The 100°C limitation does not apply to DC cable utilized in MODU industrial systems. As an alternative to the cable construction and sizing requirements of 46 CFR 111.60, DC cables on MODUs may meet the requirements of the International Association of Drilling Contractors (IADC) Standard DCCS-1, "Interim Guidelines for Industrial System DC Cable for Mobile Offshore Drilling Units". In accordance with this standard, marine cables may be listed by UL for up to 110°C. The current-carrying capacity of 110°C rated cables is 1.14 times the 90°C (E,X) rating column in IEEE-45. If the UL listing is for 100°C or less, however, the cable cannot be used at the 110°C rating. Industrial system cable rated and utilized (sized) at 110°C may be run with other cables, without maintained spacing (i.e., banked) if derated in accordance with Note 6 of Table 9.1 of IEEE-45.

It should be noted that some types of cable constructed in accordance with MIL-C-915 are not required to meet the flame propagation requirements of IEC 60332-3-22 or IEEE Standard 1202. Therefore, it may be necessary to verify that a MIL-C-915 cable type meets the flammability test of IEC 60332-3-22 or IEEE Standard 1202.

The Naval Sea Systems Command (NAVSEA) publishes two military specifications on the construction of shipboard electrical cable. The first specification, MIL-C-24640 (Cable, Electrical, Lightweight, for Shipboard Use), addresses lightweight power, lighting, and communication cable with a crosslinked polyolefin jacket. The second, MIL-C-24643 (Cable and Cord, Electrical, Low Smoke, for Shipboard Use), addresses electrical cable which exhibits low smoke generation characteristics when subjected to specific smoke and flame tests. The ampacities for these Navy cables may be found in "Cable Comparison Handbook, HDBK-299, issued 3 April 1989." Although this handbook addresses standard Navy cable size designations, it should also be used for the AWC sized cables of MIL-C-24640 having similar (not necessarily identical) cross-sectional areas. Industry needs have led to modifications to acceptable cable construction on vessels. In most cases, these modifications are superior to the minimum requirements and should be permitted. Although NEC Article 310-3 permits solid conductors for size No. 10 AWG and smaller, solid conductors are unacceptable for shipboard power cables. Nicks on solid conductors from insulation removal are likely to lead to conductor breakage with shipboard vibration. Electrical Engineering Regulations require shipboard cable to meet the flammability requirements of the standard the cable was constructed to.

3.G.14 b. (cont'd) Shipboard cable flammability was addressed internationally in IMCO Resolution A.325 (IX), which was adopted on November 12, 1975. Paragraph (e)(ii) of Regulation 23 of that Resolution requires that all electric cables be at least of a flame retardant type and installed in a manner that does not impair their original flame retarding properties. This requirement is found in 2001 Amendments to SOLAS 1974 / II-2 Regulation 45.5.2. Attempting to provide guidance on how to meet the SOLAS Amendments, IEC Technical Committee 18 developed guidelines which stated that cables should either be qualified using a flame propagation test procedure for bunched cables or that special precautions be taken. These special precautions can be achieved by the use of fire barriers as follows:

(1) Fire stops having at least B-O penetrations are to be fitted:
   (a) At cable entries at the main and emergency switchboard,
   (b) Where cables enter engine control rooms,
   (c) At cable entries at centralized control panels for propulsion machinery and essential auxiliaries,
   (d) At each end of totally enclosed cable trunks.

(2) In enclosed and semi-enclosed spaces, cable runs are to:
   (a) have either a fire protection coating applied:
      i. to at least 1 meter in every 14 meters for horizontal runs; and,
      ii. to the entire length of vertical runs; or,
   (b) be fitted with fire stops having at least B-O penetrations every second deck or approximately 6 meters for vertical runs and at every 14 meters for horizontal runs.

The cable penetrations are to be installed in steel pipes of at least 3 mm thickness extending all around to twice the largest dimension of the cable run for vertical runs and once for horizontal runs, but need not extend through ceilings, decks, bulkheads or solid sides of trunks. In cargo areas, fire stops need only be fitted at the boundaries of the spaces.

In 2000, IEC developed a new series of tests on electric cables under fire conditions- test for vertical flame spread of vertically mounted bunched wires or cables. IEC 332 part 3 has been replaced by IEC 60332-3-22 Cat A which is the acceptable test for all cable constructed to IEC 60092-353.

In addition to the standards referenced in 46 CFR 111.60-1, cable constructed in accordance with one of the following can be accepted:
(1) Cable having a UL shipboard cable listing;
(2) For DC industrial systems on MODUs, cable meeting the requirements of IADC Standard DCCS-1;
(3) Cable constructed in general accordance with an above standard but modified in a manner clearly superior to the minimum requirements specified. Examples of such modifications have been discussed above.

c. Unique Application. Special purpose cables may be used for unique applications where there is a compelling reason for deviating from the cable construction standards discussed above in order to satisfy system requirements. Such special purpose cables may include coaxial, triaxial, and low noise signal cables. Exceptions to the construction

3.G.14 c. (cont'd) and testing requirements for such cables exist in both Section 9.1 of IEEE-45 and SOLAS II-1/45.5.2. The primary concern with these cables is flame propagation. If a particular cable type cannot be shown to comply with the IEEE-1202 or IEC 60332-3-22 (Cat A) fire tests, then the special precautions discussed earlier should be used to achieve a flame propagation resistant installation. If special purpose cables are run singly (not in or near bundles or cable trays with other cables), then self-extinguishing construction is acceptable.

As discussed in Section 7 of this guide, cables in intrinsically safe circuits need not meet the cable construction requirements of 46 CFR 111.60. These cables must have sufficient dielectric strength for the maximum voltage in the circuit, and must be of self-extinguishing construction and run singly, comply with the IEEE-1202 or IEC 60332-3-22 (Cat. A) fire tests, or be installed using the special precautions to achieve a flame propagation resistant installation.

Fiber optic cable is addressed in 46 CFR 111.60-6. Since fiber optic cables present no shock or ignition hazards, concern is limited to the flame propagation issue. Fiber optic cables must meet the flammability test of the standards listed in 46 CFR 111.60-6(a) or be installed in accordance with the special installation precautions discussed earlier.

d. Ampacity. The ampacity of a cable is the maximum current-carrying capacity of the cable, based on the cross-sectional area of the conductors, maximum allowable conductor temperature for the insulation used, and the ambient temperature. The temperature rating of a conductor is the maximum temperature, anywhere along its length, that the conductor can withstand for a prolonged period without serious degradation of its insulation. Conductors with a temperature rating above the maximum ambient temperature must be used. Tabulated ampacities should be corrected for the anticipated ambient temperature and method of cable installation (banking of cables) using the ampacity correction factors applicable to that table. Adjacent or closely spaced cables both raise the ambient temperature and impede heat dissipation. It is important to read the notes for each table to know the ambient temperature and method of cable installation upon which the tabulated ampacities are based, so that the proper correction factors may be applied.

The existing cable application guidance in 46 CFR 111.60-3 uses some old standard editions, for example the 1983 edition of IEEE Std 45. Newer standard editions are under consideration for incorporation. During the interim, the following may be used on an equivalency basis with the standards listed in 46 CFR 111.60-3: Cable constructed according to IEEE Std 1580 (2001) that meets the provisions for cable application of section 24 of IEEE Std 45 (2002), and is derated in accordance with Table 25, Note 6, of the same standard. Cable for special applications defined in section 24 of IEEE Std 45 (2002) that meets the provisions of that section. Cable constructed according to IEC 60092-353 (1995) or UL 1309 (1995) that meets section 24 of IEEE Std 45 (2002), except 24.6.1, 24.6.7, and 24.8. Cable constructed according to IEC 60092-353 (1995) may meet IEC 60092-352 (1997), Table 1, for ampacity values, and be derated according to IEC

3.G.14 d. (cont'd) 60092-352 (1997), paragraph 8. UL 1309 (1995) cable ampacities are contained in the appendix of that standard.

The ampacity of a four-conductor cable, where one conductor is the neutral which carries only the unbalanced current (normally small) from the other conductors, is the same as that of a three-conductor cable. Where four or more current-carrying power conductors are used in a cable, as in a MODU topdrive system, the maximum current carrying capacity of each conductor must be reduced in accordance with the number of power conductors in a cable (not in a tray).

e. Minimum Conductor Size. The Electrical Engineering Regulations specify minimum cable conductor sizes of 22 AWG for thermocouple and pyrometer cables, 14 AWG for lighting and power cables, and 18 AWG for other cable conductors. The regulations also require each wire to be at least 18 AWG, and wires in switchboards to be at least 14 AWG. These minimum sizes are considerably larger than the conductors commonly found in ribbon cables, used to interconnect printed circuit boards and computer system components.

Where ribbon cables or similar small conductor size cables are recommended for use in low-power instrumentation, monitoring, and control circuits by the equipment manufacturer(s), the use of such cables may be permitted. Additional mechanical protection may be required to protect the conductors from parting due to mechanical damage or flexing. Ribbon cables are usually found within equipment or consoles. However, they are sometimes used externally to interconnect modules. The location of the cable aboard the vessel and the function of the circuit will determine the extent of mechanical protection required, if any.

The requirement for 14 AWG minimum wire in switchboards was written with full voltage, field-wired switchboard equipment in mind. Wire smaller than 14 AWG may be considered for low voltage, low-power circuits within switchboards.

f. Fiber Optic Cables Cord. Each fiber optic cable must be constructed to pass IEEE Std 1202 or IEC 600332-3-22 (Category A) flammability test. Fiber optic cable must be installed in accordance with 46 CFR 111.60-2.

g. Flexible Cord. Flexible electric cords and cables may be used only as allowed by Table 400-4 and Sections 400-7 and 400-8 of the NEC, per 46 CFR 111.60-13. They must not be used for fixed wiring, unless they are dual rated as either flexible cable or cord and shipboard cable listed by UL. No. 18 AWG conductors are permitted in power and lighting circuits only for portable applications.

h. Color Coding. The Electrical Engineering Regulations do not require the use of any particular conductor color coding scheme. The only requirement is that an insulated equipment grounding conductor in a cable must have green braid or insulation, per 46 CFR 111.05-33(b). Different color codes for circuit conductors may be found in the incorporated cable construction standards and NEC Sections 210-5 and 310.12. Although the regulations do not require the use of a specific color scheme for the ungrounded conductors of a circuit, it is recommended that some consistent coloring or marking practice be used

3.G.14 h. (cont'd) for multiwire circuits in order to provide positive identification of circuit conductors and facilitate troubleshooting and repair.

i. Cable Installation. Each cable installation must meet the general requirements of the standard to which they were constructed. The use of nylon or plastic cable straps is explicitly recognized for horizontal runs where the cable will not fall if the strap fails. They are permitted where the cable strap is used to maintain spacing and not for support of the cables. IEEE Standard 45 requires metallic band strapping to be a minimum of 5/8 inch wide. Deviations from this dimension may be permitted where the width of the strap provides sufficient mechanical strength to support the cables and does not cause chafing of the cable jacket when the strap is tightened.

Twist-on wire connectors, or "wire nuts," (TM) are pressure-type connectors which may be used per 46 CFR 111.60-17. Connections using twist-on connectors must be made within an enclosure. The use of insulating electrical tape over connectors is recommended. Twist-on connectors are not recommended for use on small vessels due to the pounding motions frequently encountered. Additionally, they are not recommended for use in vital circuits, such as those powered from the emergency switchboard. Pressure connectors are typically designed for non-marine-stranded conductors. This may present a problem, especially with smaller conductors. Some twist-on connectors have sharp metallic inserts that could sever individual wires as they cut their way into the copper. Installations must be carefully examined to ensure that connections are tight, and that conductors have not been damaged.

When pressure type connectors are used, the proper size is important. The connection must be tight, yet it must not be necessary to remove strands to fit the connector body to the conductor. This can sometimes present problems since marine cable has a different conductor diameter than NEC constructions.

Methods of connection of conductors to terminal parts, other than those listed in 46 CFR 111.60-17, may be accepted provided they insure a sound mechanical and electrical connection without damaging the conductors. A twisted, soldered loop may be used to connect a stranded conductor to a terminal screw on receptacles and lampholders where supplied by a circuit having a grounded conductor, a lampholder of the screw-shell type should have the grounded conductor connected to the screw-shell.

Requirements for cable splicing are contained in 46 CFR 111.60-19, which references section 20.11 of IEEE Std. 45. Splicing may be used to connect cables in one subassembly to cables in another subassembly, or to facilitate modular construction techniques. Splicing is also acceptable during alterations to extend a circuit, or to facilitate installation of an exceptionally long cable. Sections of replacement cable may be spliced in to replace damaged areas if the remainder of the cable is proven to be safe. A cable may not be spliced in a hazardous area, except in intrinsically safe systems.

3.G.14 i. (cont'd) The safety and reliability of a spliced cable is dependent upon the careful selection of the proper connectors, insulation and jacket replacement material, installation tools, and installation procedures. It is most important that the right size connector be used for the cable, with no trimming of the conductors. Selection of the proper connector for the conductor, the proper compression die for the connector, and the proper compression tool for the die is critical to the mechanical and electrical integrity of the splice. The type of crimp is not really important, as long as it does not leave sharp edges that may damage insulation. Manufacturer's certification of material compatibility is generally acceptable. The replacement insulation material need not match the cable jacket material as long as the temperature characteristics and materials are compatible.

Heat shrinkable or pre-stretched tubing is acceptable, as well as poured epoxy, polyurethane, and vulcanized replacement jackets. Flame propagation is not a major concern for the short lengths of cable splices. While splices made in the open are prohibited in hazardous locations, cables may be connected in hazardous locations in junction boxes (explosion proof in Division 1 and Zone 0). Note that flexible cables or cords with conductors of 12 AWG or larger may be spliced for repairs, per 46 CFR 111.60-13(e).

(j) Cable Armor. 46 CFR 111.105-17 recommends the use of armored cable to enhance ground detection capabilities. Another purpose of the recommendation for armor is to give added mechanical protection to avoid possible arcing from an accidentally severed cable as well as enable quicker detection, via the ground detection system, of damaged cable insulation. With intrinsically safe systems used in hazardous locations, the armor is unnecessary for this purpose since the energy available in the system is insufficient to constitute an ignition hazard. However, if there is insufficient cable separation, or there is no grounded partition, then a metal weave or shield around the cable is required to prevent the possible induction of current within the intrinsically safe circuit. This metallic covering may be inside an outer cable jacket. See 111.105-11(b) on the use of shielded cables.

An exception to the recommendation for armored cable in hazardous locations is when flexible cord or cable must be used to connect electrical equipment. This flexible cable need not be joined to armored cable immediately beyond the section that requires flexing service. Rather than make such a connection in an explosionproof junction box within the hazardous location, it is generally preferable to extend the flexible cable to its point of supply outside the hazardous area. However if a run of flexible cable is particularly vulnerable to mechanical damage, connection to armored cable or some other means of mechanical protection may be required.

3.G.14 j. (cont'd) Where single-conductor cables are used for AC circuits or DC circuits with high ripple content, the following precautions should be observed in order to avoid undesirable induced currents and generated heat:

(1) Cable armor, if any, should be of non-magnetic material;
(2) There should be no closed magnetic circuit around any conductor unless it encircles all conductors of the circuit; where installed in steel conduits, pipes, or casings, the cables should be bunched so that all conductors and the neutral, if any, are enclosed by the same conduit, pipe, or casing;
(3) No magnetic material should be located between single-conductor cables of a circuit; where such cables pass through a steel deck or bulkhead, all the conductors of the circuit should pass through a non-ferrous plate or gland so that no magnetic material is located between the conductors.

Cable routing and segregation requirements are contained in 46 CFR 111.60-9 and 111.60-5, which references IEEE-45 Sections 20 and 22, except 20.11. Section 20.3 requires cables to be so routed as to avoid, so far as practicable, galleys, firerooms, and other spaces where excessive heat and high risk of fire may be encountered. SOLAS II-1/45.5.3 includes laundries in this category of spaces to be avoided.

15. Motor Circuits (46.CFR 111.70).

a. General (46 CFR 111.70-1). With the exception of steering gear motor circuits, propulsion motor circuits (which must meet 46 CFR Subparts 111.70 and 111.35, respectively) and certain special requirements applicable to fire pump motor circuits, each other motor circuit, controller, and protection must meet the requirements of ABS Rules for Building and Classing Steel Vessels (RSV Rules) or ABS Rules for Building and Classing Mobile Offshore Drilling Units (MODU Rules), as applicable. 46 CFR 111.70-1 currently references sections 4/5A5.13, 4/5B2.13, 4/5B2.15 and 4/5C4 of the 1996 RSV Rules; these correspond to sections 4-8-2/9.17, 4-8-3/5, and 4-8-4/9.5 of the 2003 RSV rules. Sections 4/3.87 through 4/3.94 and 4/3.115.6 of the 1994 MODU Rules correspond to Part 4, Chapter 3, sections 4/7.11 and 4/7.17 of the 2001 MODU Rules. Previously 46 CFR 111.70 relied on Article 430 of ANSI/NFPA 70, the National Electrical Code (NEC). In 1996 subpart 111.70 was revised to reflect internationally recognized classification society standards, practices and requirements which do not rely solely on the shoreside code of the National Electrical Code (NEC). Referencing section 430 of the NEC may still be useful as indicated in the following sections, but is no longer binding.

Diagram 430-1 in the NEC is a useful diagram of a motor circuit. The diagram serves as a guide to the applicability of the various sections of Article 430; the NEC does not require all motor circuits to be arranged as shown in the diagram. In fact, the vast majority of shipboard low-voltage motor circuits consist of the motor, a combination motor controller containing overload protection which meets NEC 430 Part C and a disconnecting means which meets 430 Part H, fuses or a circuit breaker which provide branch-circuit short-circuit and ground-fault protection per 430 Part D, and motor branch-circuit conductors meeting 430 Part B.

3.G.15 b. 600 Volts and Above. Part K of NEC Article 430 adds to or amends the other provisions of the article for motor circuits over 600 volts. Specifically, 430-124 permits motor conductors to have an ampacity not less than the motor overload protective device trip current, which may be 100% of the rated full-load current. This applies to medium-voltage motors for applications such as thrusters and compressors. Cables for DC motors for drilling equipment (draw-works, rotary table, mud and cement pumps) may be sized in accordance with the International Association of Drilling Contractors "Interim Guidelines for Industrial System DC Cable for Mobile Offshore Drilling Units," IADC-DCCS-1. This standard is under section 3.G.15.d.

c. Motor Protection. Motor overload protective devices are required for most motors in order to protect the motors, motor control equipment, and motor branch-circuit conductors against excessive heating due to sustained motor overload, failure to start, or motor stalling. Continuous-duty motors of more than 1 horsepower must generally be provided with a separate overload device set to trip at not more than 115% of the motor rated full-load current. In most cases, overload relays with heater coils responsive to the motor current are included in the motor controller. The Electrical Engineering Regulations generally permit the use of only two motor overload devices for three-phase motors in lieu of the three specified in NEC Table 430-37; see 46 CFR 111.70-1(b). The size of the overload protective device should be based upon the actual nameplate full-load current rating. The values listed in columns "C" and "D" of the Quick Reference tables in section 3.G.15.e may be used to check the maximum values for running protection.

Part D of Article 430 specifies the protection of motor circuits rated 600 volts or less against overcurrent due to short circuits or grounds. A single protective device may be used to provide both branch circuit/ground-fault and motor overload protection where the overload requirements of 430-32 are met; see NEC 430-55. NEC 430-52 permits a motor short-circuit protector (MCP) to be used in lieu of the protection specified in Table 430-152 where the motor short-circuit protector is a part of a combination controller which has both motor overload protection and short-circuit and ground~fault protection in each conductor and where it will operate at not more than 1300 percent of motor full-load current.

Motor controllers, also called "starters," are used to manually or automatically start electric motors from a local or remote location. Motor controllers basically consist of a relay or "contactor," which is used to connect the motor to the AC line by a pushbutton switch, liquid level switch, pressure switch, temperature switch, etc. The two types of controllers used are "low voltage release" (LVR) and "low voltage protection" (LVP). Both can appear to be identical, but their electrical circuits will vary. LVR controllers are required for vital systems to ensure that the equipment will re-start following either a loss of power or a reduction in voltage below the "drop-out" value of the operating coil. These controllers are usually energized by contacts that mechanically remain closed when power is lost. LVP controllers are energized by momentary contacts, such as a

3.G.15 c. (cont'd) pushbutton. They will not re-start following a power outage until the momentary pushbutton contact is again depressed.

Motor controllers are furnished with the thermal overload elements mentioned above. These elements are used to open (or close) contacts which are used either in the control circuit itself or to provide an overload alarm to another circuit.

Some of these elements are adjustable but most often the non-adjustable type is specified. Most motors are stopped by these (normally closed) contacts when an overload occurs. For vital systems, such as steering, these devices are used only to signal the overload condition in a separate circuit.

Safety disconnects: Each motor circuit must have a disconnecting means capable of disconnecting both the motor and the controller from the circuit. The disconnect and the controller may be contained within the same enclosure; the disconnect must, however, open all ungrounded supply conductors to the controller and motor control circuits. Switches and circuit breakers used as disconnecting means for low-voltage motor circuit must have ampere rating of at least 115 percent of the motor full-load current. The use of fuses as disconnects, although permitted by the NEC, is specifically prohibited by 46 CFR 111.70-1(c). Electric heaters in motor controller enclosures should not be accepted from the disconnecting requirements in 46 CFR 111.70-5(a). The purpose of this requirement is to eliminate the shock hazard posed to personnel by an enclosure with more than one source of potential, and is consistent with the intent of NEC 430-113. To allow for safe access during maintenance and inspection shutdown periods, a disconnecting device for an electric heater in a motor controller enclosure, or one of the protection features required by 111.70-7(d) for control, interlock or indicator circuits should be provided.

d. Interim Guidelines For MODUs. Reference 3.G.15.b

INTERNATIONAL ASSOCIATION DRILLING CONTRACTORS

Street Address: 15810 Park Ten Place, Suite 242
Houston, Texas 77084-5134
Phone 713-578-7171
Telex # 516985
Telefax 713-578-0589

Mailing Address: P.O. Box 4287
Houston, Texas 77210-4287

INTERIM GUIDELINES
FOR INDUSTRIAL SYSTEM DC CABLE
FOR MOBILE OFFSHORE DRILLING UNITS
IADC-DCCS-1

I. Purpose

These interim guidelines have been prepared to establish a method for the selection, installation and acceptance of DC electrical cables used on industrial drilling systems on mobile offshore drilling units. These systems are drawworks, pumps and rotary table. These interim guidelines will provide the necessary

3.G.15 d. (cont'd) guidelines for DC cable on MODUs until a final standard has been prepared and issued.

II. Single Conductor Cable Selection

For all cable types, the following shall apply:

A. The interim guidelines shall apply to DC motors nominally rated 750 volts DC armature voltage.

B. The cable size per polarity shall have a current-carrying capacity determined by multiplying the duty factor times the lesser of:

1. The continuous current rating of the motor; or
2. The continuous current limit setting of the power supply.

C. The duty factors to be used are:

1. Mud pumps, cement pumps: 0.80;

2. Drawworks, rotary: 0.65.

D. The cable need only be sized for a maximum ambient temperature of 45 C in machinery spaces as determined by the U.S. Coast Guard, the American Bureau of Shipping and the Marine Transportation Committee of the Institute of Electrical and Electronic Engineers.

E. The cable shall meet the flame retardancy requirements of IEEE-383-1974 or IEEE-45-1977. Manufacturer shall supply to the owner of the vessel a certificate of compliance with this requirement.

F. The voltage rating of the cable shall be 1000 volts minimum.

G. For this specification, the cable insulation and jacket shall meet or exceed the requirements of the latest edition of one or more of the following standards as it applies to the construction of a single conductor power cable. Where the following standards do not specifically list AAR-sized cable, the insulation and jacket thickness shall conform to the next larger size cable listed.

1. Rubber-insulated Wire and Cable for the Transmission and Distribution of Electrical Energy (ICEA S-19-81);

2. Cross-linked Thermosetting Polyethylene-insulated Wire and Cable for the Transmission and Distribution of Electrical Energy (ICEA S-66-524);

3. Ethylene-Propylene Rubber-insulation Wire and Cable for the Transmission and Distribution of Electrical Energy (ICEA S-68-516);

4. Specification for Single Conductor Cleaning-stripping Ethylene-Propylene Rubber-insulated 0-600 Volt (see A and E of this interim guideline) Chlorosulfonated Polyethylene-jacketed Cable for Locomotive and Care Equipment (AAR Specification 591). NOTE: The insulation and jacket thickness of AAR 591 are suitable for 1000 volts based on comparison with ICEA S-68-516 for 0-2000 volt rating.

3.G.15 d. (cont'd) The manufacturer shall test, certify and label the cable with appropriate voltage ratings.

5. American Association of Railroads (AAR) Wiring and Cable Specifications S-501.

6. IEEE Recommended Practice for Electrical Installations on Switchboards (IEEE-45).

7. General Specifications for Cable and Cord Electrical for Shipboard Use (Military Specification MIL-C-915E).

8. Any UL-listed Marine Shipboard Cable

e. Motor Circuit Information.

Figure 1, reference 3.G.15.c

3-Phase, 208 VAC Motor Branch Circuit Quick-Reference Table for Single Banked Cables									
A	B	C	D	E	F	G	H	I	J
HP	FLA	Running Prot. 115% FLA.		Starter Size	Disconnect Size	Max. Prot. Device Full Volt Start			
		Adj.	Non-Adj.			Code C.B. 200%	B-E Fuse 250%	Code C.B. 250%	F-V Fuse 300%
.25	1.23	1.41	2	00	30	15	15	15	15
.33	1.48	1.7	2	00	30	15	15	15	15
.5	2.0	2.3	3	00	30	15	15	15	15
.75	2.8	3.22	4	00	30	15	15	15	15
1	3.6	4.14	4	00	30	15	15	15	15
1.5	5.7	6.56	8	00	30	15	15	15	20
2	7.8	8.97	10	0	30	20	20	20	25
3	10	11.5	12	0	30	20	30	30	30
5	17	19.6	20	1	60	35	40	50	60
7.5	24	27.6	30	1	60/100	50	50	70	80
10	31	35.7	40	2	100	70	70	90	100
15	46	52.9	60	3	100/200	100	100	125	150
20	59	67.9	70	3	200	125	125	150	200
25	75	86.3	100	3	200/400	175	175	200	250
30	88	101	110	3	200/400	200	200	125	300
40	114	131	150	4	400	250	250	300	350
50	143	164	200	4	400/600	300	300	400	450
60	170	196	225	5	400/600	350	350	500	500
75	212	243	250	5	600	500	500	600	-
100	273	314	350	5	600	600	600	-	-
125	343	394	450	6	-	-	-	-	-
150	396	455	500	6	-	-	-	-	-
200	528	607	800	6	-	-	-	-	-

Figure 1, reference 3.G.15.c (cont'd)

3-Phase, 208 VAC Motor Branch Circuit Quick-Reference Table for Single Banked Cables (cont'd)						
	K	L	M	N	O	P
HP	125%	Three Conductor Branch Cable				
		AWG (IEEE 45, 50 C)			TSGA - ( )	
		T	E, X	AVS	40 C	50 C
.25	1.54	14	14	14	4	4
.33	1.85	14	14	14	4	4
.5	2.51	14	14	14	4	4
.75	3.5	14	14	14	4	4
1	4.5	14	14	14	4	4
1.5	7.13	14	14	14	4	4
2	9.75	14	14	14	4	4
3	12.5	14	14	14	4	4
5	21.3	12	14	14	9	9
7.5	30.0	10	10	12	9	9
10	38.8	7	8	10	9	14
15	57.5	5	6	7	23	23
20	73.8	3	4	5	30	30
25	93.8	1	2	3	40	50
30	110.0	1/0	1	2	50	60
40	142.5	3/0	2/0	1/0	75	100
50	178.8	4/0	3/0	2/0	125	125
60	212.5	300	250	4/0	150	150
75	265.0	400	350	250	200	250
100	341.3	600	500	400	300	400
125	428.8	-	-	-	400	-
150	495.0	-	-	-	-	-
200	660.0	-	-	-	-	-

Figure 2, reference 3.G.15.c

3-Phase, 460 VAC Motor Branch Circuit Quick-Reference Table for Single Banked Cables									
A	B	C	D	E	F	G	H	I	J
HP	FLA	Running Prot. 115% FLA.		Starter Size	Disconnect Size	Max. Prot. Device Full Volt Start			
		Adj.	Non-Adj.			Code C.B. 200%	B-E Fuse 250%	Code C.B. 250%	F-V Fuse 300%
.5	1	1.15	2	00	30	15	15	15	15
.75	1.4	1.61	2	00	30	15	15	15	15
1	1.8	2.07	3	00	30	15	15	15	15
1.5	2.6	2.99	3	00	30	15	15	15	15
2	3.4	3.91	4	00	30	15	15	15	15
3	4.8	5.52	6	0	30	15	15	15	15
5	7.6	8.74	10	0	30	20	20	20	25
7.5	11	12.65	15	1	30/60	25	30	30	35
10	14	16.1	20	1	30/60	30	35	35	45
15	21	24.15	25	2	60/100	45	60	60	70
20	27	31.05	35	2	60/100	60	70	70	90
25	34	39.1	40	2	100/200	70	90	90	110
30	40	46	50	3	100/200	90	100	100	125
40	52	59	60	3	200	125	150	150	175
50	65	74.75	80	3	200	150	175	175	200
60	77	88.55	90	4	200/400	175	200	200	250
75	96	110.4	125	4	400	200	250	250	300
100	124	142.6	150	4	400	250	350	3350	400
125	156	179.4	200	5	400/600	350	400	400	500
150	180	207	225	5	600	400	450	450	600
200	240	276	300	5	600	500	600	600	-

Figure 2, reference 3.G.15.c (cont'd)

3-Phase, 460 VAC Motor Branch Circuit Quick-Reference Table for Single Banked Cables (cont'd)						
	K	L	M	N	O	P
HP	125%	Three Conductor Branch Cable				
		AWG (IEEE 45, 50 C)			TSGA - ( )	
		T	E, X	AVS	40 C	50 C
.5	1.25	14	14	14	4	4
.75	1.75	14	14	14	4	4
1	2.25	14	14	14	4	4
1.5	3.25	14	14	14	4	4
2	4.25	14	14	14	4	4
3	6	14	14	14	4	4
5	9.5	14	14	14	4	4
7.5	13.75	14	14	14	4	4
10	17.5	14	14	14	4	9
15	26.25	10	10	12	9	9
20	33.75	8	10	10	9	9
25	42.5	7	8	8	14	14
30	50	6	7	7	14	23
40	65	4	5	6	23	23
50	81.25	2	3	4	30	40
60	96.25	1	2	3	40	50
75	120	2/0	1/0	1	60	75
100	155	3/0	2/0	1/0	100	100
125	195	250	4/0	3/0	125	150
150	225	300	250	4/0	150	200
200	300	500	400	300	250	300

(1) Examples of AC Motor Circuits. Examples of 3-Phase AC Motor Circuits (reference 3.G.15.e). Use Quick-Reference Columns, Figure 1 above:

(a) Example No. 1. Single motor, 25 horsepower, 460V, code letter J, full voltage start, non-adjustable overloads, branch circuit breaker, Type T, IEEE 45 Cable, in 50 C ambient temperature space.
From Quick-Reference Columns, Figure 1:

D - Standard overload size nearest 115 percent full load; current is 40 amperes.

E - Starter size is 2.

F - If a disconnect is used near the motor, a 100 ampere size is sufficient, provided it is not fused above 100 amperes (if fusible). If part of a combination starter, the complete unit must be rated to handle the 25-horsepower motor.

I - The maximum standard size for the branch circuit protective device is a 90 ampere breaker.

3.G.15.e(1) (a) (cont'd) L – The cable used to power the motor must be rated for at least 42.5 amperes. For Type T cable in a 50 C ambient location Type T-7 is required

(b) Example No. 2. A 460 volt Motor Control Center (MCC) supplying one 30 HP, one 15 HP, and two 5 HP motors in 50 C ambient space. One 5 HP motor is a steering system pump. All are full-voltage starting; the 30 HP motor starter has protection with circuit breakers. Navy-type cable TSGA is used. First get data for each load; assume code letters F-V.

Quick-Reference Columns, Figure 2:							
Col. A	Col. B	Col. C	Col. E	Col. F	Col. I	Col. K	Col. P
HP	Full Load Amps	Adj. Over Load Size	Starter Size	Std. Disc. Size, If Used	Max. Branch Circ. Bkr (250%)	125% F.L.A.	50 C TSGA -()
30	40	46	3	100	100	50	23
15	21	24.2	2	60	60	26.3	9
5	7.6	8.7	0	30	N/A	9.5	4

Subchapter J does not address motor control centers directly; one must refer to NEC 430-24 and 430-62(a). Per 430-24, bus or cable in MCC must be sized for 125 percent of the largest plus 100 percent of the remaining motor full load currents, 50+21+7.6+7.6 = 86.2 amperes. If the MCC has spare sections, allowance shall be made for future growth. Breaker protecting entire MCC must not be larger than the largest rating or setting of the branch-circuit short-circuit and ground fault protection (based on Table 430-152) for any motor in the group, or 100+ 21+ 7.6+7.6 = 136.2 amperes.

A 125 amp circuit breaker would be adequate.

The 5 HP steering pump motor should be protected with a circuit breaker having adjustable, instantaneous (magnetic) type tripping only. This breaker must be set to open the motor circuit at 175 to 200 % of the locked rotor current. As will be shown, this setting should be 79 to 90 amperes.

(2) Tables.

NEMA AC General purpose, Class A Full Voltage Controllers, Single-Speed Squirrel Cage Motors.					
3-Phase Non-Jogging Duty					
Size	Continuous Duty Amps	200 VAC	Horsepower 230 VAC	460 VAC	Limit Amps
00	9	1.5	1.5	2	11
0	18	3	3	5	21
1	27	7.5	7.5	10	32
2	45	10	15	25	52
3	90	25	30	50	104
4	135	40	50	100	156
5	270	75	100	200	311
6	540	150	200	400	621
7	810		300	600	932

3.G.15.e(2) (cont'd)

3-Phase Jogging Duty					
Size	Continuous Duty Amps	200 VAC	Horsepower 230 VAC	460 VAC	Limit Amps
0	18	1.5	1.5	2	21
1	27	3	3	5	32
2	45	7.5	10	15	52
3	90	15	20	30	104
4	135	25	30	60	156
5	270	60	75	150	311
6	540	125	150	300	621

Note: From NEMA ICS 2-321 B

Motor Conversion Formulas.			
TO FIND	DC	AC - Single Phase	AC 3 Phase
AMPS when HP is known	$\frac{\text{HP x 746}}{\text{Volts x Eff}}$	$\frac{\text{HP x 746}}{\text{Volts x Eff x PF}}$	$\frac{\text{HP x 746}}{\text{Volts x 1.73 x Eff x PF}}$
AMPS when KW is known	$\frac{\text{KW x 1000}}{\text{Volts}}$	$\frac{\text{KW x 1000}}{\text{Volts x PF}}$	$\frac{\text{KW x 1000}}{\text{Volts x 1.73 x PF}}$
AMPS when KVA is known		$\frac{\text{KVA x 1000}}{\text{Volts}}$	$\frac{\text{KVA x 1000}}{\text{Volts x 1.73}}$
Kilowatts KW	$\frac{\text{AMPS x Volts}}{1000}$	$\frac{\text{AMPS x Volts x PF}}{1000}$	$\frac{\text{AMPS x Volts x 1.73 x PF}}{1000}$
KVA		AMPS x Volts	AMPS x Volts x 1.73
Power Factor PF		$\frac{\text{KW}}{\text{KVA}}$	$\frac{\text{KW}}{\text{KVA}}$
HP Output	$\frac{\text{AMPS x Volts x Eff}}{746}$	$\frac{\text{AMPS x Volts x Eff x PF}}{746}$	$\frac{\text{AMPS x Volts x 1.73 x Eff x PF}}{746}$

Notes: (1) Power Factor and Efficiency should be expressed in decimals.

(2) If Power Factor is not given, assume 0.8.

(3) If Efficiency is not given, assume 0.8.

Single Phase Motor: Approximate Full Load Current.			
HP	115V	HP	115V
.33	7.2	2	24.0
.5	9.8	3	34.0
.75	13.8	5	56.0
1.0	16.0	7.5	80.0
1.5	20.0	10	100.0

Notes: (1) Values are for motors of normal speed and torque.

(2) For additional values, see NEC Table 430-148.

(3) For other KW ratings, voltages, and power factors:

$$\text{AMPS} = \frac{\text{KW x 1000}}{\text{1.732 x Volts x PF}}$$

3.G.15.e(2) (cont'd)

Motor Locked Rotor Current.												
Max.	115VAC 1 Phase			208VAC 3 Phase			230VAC 3 Phase			460VAC 3 Phase		
HP	100%	175%	200%	100%	175%	200%	100%	175%	200%	100%	175%	200%
2	144	252	288	43	75	86	39	68	78	20	35	40
3	204	357	408	59	103	118	54	95	108	27	47	54
5	336	588	672	99	173	198	90	158	180	45	79	90
7.5	480	840	960	145	254	290	132	231	264	66	116	132
10	600	1050	1200	178	312	356	162	284	324	84	147	168
15				264	462	528	240	420	480	120	210	240
20				343	599	686	312	546	624	156	273	312
25				422	739	844	384	672	768	192	336	384
30				515	901	1030	468	819	936	234	410	468
40				686	1201	1372	624	1092	1248	312	546	624
50				825	1444	1650	750	1313	1500	378	662	756
75				1221	2137	2442	110	1943	2220	558	977	1116
100				1624	2874	3248	1476	2583	2952	738	1292	1476

Notes: (1) These values are to be used only if motor code letter is not provided.

(2) Values above calculated from NEC Tables 430-150, 430-151.

(3) If motor nameplate code letter is provided, the following applies

(a) See NEC Table 430-7(b) for code letter KVA/HP; and

(b) Locked rotor current, IL:

$$\text{3-phase motors IL} = \frac{\text{HP x (KVA/HP) x 1000}}{\text{1.73 x Volts}}$$

$$= \frac{\text{577 x HP x (KVA/HP)}}{\text{Volts}}$$

$$\text{1-phase motors IL} = \frac{\text{HP x (KVA/HP) x 1000}}{\text{Volts}}$$

3.G.15.e(2) (cont'd)

Continuous-Duty, 3-Phase Motor Approximate F.L.A.						
HP	Squirrel Cage			Wound Rotor		
	208V	220V	440V	208V	220V	440V
.5	2.1	1.9	.95			1.0
1	3.7	3.4	1.7	5.9	5.4	2.7
1.5	5.5	5.0	2.5	7.5	6.8	3.4
2.0	6.9	6.3	3.1	8.8	8.0	4.0
2.5	8.4	7.6	3.8	9.7	8.8	4.4
3.0	9.9	9.0	4.5	11.5	10.5	5.3
5.0	16.0	14.5	7.2	17.6	16.0	8.0
6.0	18.9	17.2	8.6	19.8	18.0	9.0
7.5	23	21	10.5	25.3	23	11.5
9.0	27.3	24.8	12.4	28.6	26	13
10	28.6	26	13.5	31.9	29	14.5
20	57.2	52	26	59	54	27
25	71.5	65	32	75	68	34
30	86	78	39	88	80	40
35	101	92	46	103	94	47
40	112	102	51	114	104	52
45	128	116	58	128	116	58
50	139	126	63	141	128	64
60	167	152	76	169	154	77
75	207	188	94	207	188	94
100	275	250	125	275	250	125
125	341	310	155	341	310	155
150	407	370	185	407	370	185
200	539	490	245	539	490	245

Notes: (1) To be used in lieu of nameplate data (see NEC 430-6).

(2) Not to be used to size motor running overloads; use nameplate data.

(3) For multi-speed, low speed, special motors, use nameplate data.

(4) For additional information, see NEC Table 430-150.

(5) Ranges: 220V 220-240VAC
440V 440-480VAC

16. Navigation Lights (46 CFR 111.75-17).

a. General. Annex I of the International Regulations for Preventing Collisions at Sea, 1972, (72 COLREGS) and the 1980 Inland Navigation Rules, (80 RULES), specify navigation light requirements in terms of color, arcs, range of visibility, and position. Lights that act as aids to navigation, such as lights on a dredge pipeline, do not have to meet 46 CFR 111.75-17. The regulations for these lights are found in 33 CFR 88.15.

b. Fixtures & Fixture Marking. Label fixtures in accordance with 46 CFR 111.75-20. The regulations applicable to electric navigation light fixtures are also contained in 46 CFR 111.75-17. There are no

3.G.16 b. (cont'd) regulations that specifically prohibit the use of non-electric lights, except where the use of open flames is prohibited. However, the requirement for a navigation light indicator panel generally precludes the use of non-electric lights on vessels subject to the requirements of Subchapter J.

c. Horizontal Sector. Annex I of both sets of Rules gives specific arcs in which certain intensities of light are required. For example, sidelights as fitted on the vessel must, in the forward direction, reach "practical cut-off" (i.e., one-eighth of the minimum required sector intensity) between 1 and 3 degrees outside the prescribed sector. The 72 COLREGS have been interpreted as requiring the intensity between 0 and 1 degrees outside the prescribed sector to be greater than the practical cut-off value. This allows both sidelights to be visible dead ahead of the vessel, at a distance dependent upon their separation. This may present a problem for some vessels. For example, containers stacked forward of the sidelights could act as large screens, preventing the 1-degree "spillover." A Certificate of Alternative Compliance (CAC) is not appropriate in such cases; the lights should be relocated or the obstruction removed.

d. Vertical Sector. Annex I of both sets of Rules also establishes requirements for vertical sectors of navigation lights. Previously, this parameter was not even considered.

e. Masthead Separation. Masthead lights must be separated by a horizontal distance of one-half the length of the vessel but the separation need not be more than 100 meters (Annex I 3.(a)). Most vessels with a midship house were built with the after mast located amidships and will not meet this separation requirement without moving the mast(s). Also, moving the after mast from the midship house to the after house generally requires the after mast to be higher than original to meet height separation requirements. For this reason, Rule 38 permanently exempted vessels under 150 meters (492.1 ft.) and gave larger vessels 9 years to comply.

This extension was made with two-house vessels in mind and in consideration of the economic hardships involved with moving/raising masts. Therefore, CAC's would not be appropriate for masthead separation unless moving the masts would interfere with the special purpose of the vessel.

f. Sidelight Placement. Sidelights must not be "in front" of the forward masthead light (Annex I 2(g), 3(b)). This rule also applies to single masted vessels and will require sidelight repositioning on many vessels in the 20-50 meter range. Some vessels (i.e., tugboats, workboats, or fishing vessels) may qualify for CAC's due to the special purpose of the vessel.

Acceptance and conformance to Underwriters Laboratories Inc. standard UL 1104 is based on the requirements of the 72 COLREGS and construction requirements that address lighting fixtures in weather locations. The regulations do not require UL listing of navigation light fixtures; they require that the fixtures meet the UL standard. This allows the manufacturer to do their own testing and submit the reports for acceptance.

3.G.16 f. (cont'd) Premature bulb failure on vessels such as tugs and barges, problems with vibration and shock (impact) have been reported. Although navigation lights are subjected to stringent vibration testing, with bulb failure as a rejection factor (evidenced by one manufacturer failing this test and having to re-design the fixtures), the accepted fixtures are not tested for impact shock. When shock or vibration is a problem, shock mounting the fixture is recommended. This shock mounting can take two forms. The first is internal isolation of the bulb. This is a manufacturer's modification and could involve retesting of the fixture. The second is to isolation mount the fixture on the vessel.

Another factor that has contributed to premature failure of lamps is inadequate voltage regulation. A 10% increase in voltage will reduce bulb life to approximately 25% of its rated life. Thus, any action to ensure proper voltage at the fixture will help to extend bulb life.

Screens. Annex I of the International Regulations for Preventing Collision at Sea, 1972 (72 COLREGS) and Annex I of the 1980 Inland Navigation Rules require sidelights on vessels over 20 meters in length to have external screens. These screens are to be painted matte black. Therefore, all sidelight fixtures on U.S. Coast Guard certificated vessels greater than 20 meters in length must have screens painted matte black for the sidelights.

The sidelight screens may be utilized to obtain the required cut-off angles for the sidelights as required by Section 9 of Annex I to the 72 COLREGS and section §84.17 of the 1980 Inland Rules. If the sidelight fixtures are fitted with internal screens that provide the proper cut-off angles, an external screen must still be provided to meet the 72 COLREGS as well as the Inland Rules. The installation of an internally screened sidelight in conjunction with an inboard external screen, if properly aligned, would meet the requirements.

In addition to sidelights, other navigation lights (such as masthead and anchor) have horizontal sector cut-off requirements. Most manufacturers have used internal screens to achieve the required cut-off, but external screens would also be acceptable, although they are not required. These fixtures would be required to be marked with an indication that they are to be installed with external screens.

g. Barge Lights (Battery Powered) Exemptions. International Regulations for Preventing Collisions at Sea, 1972, (72 COLREGS); Lights for Unmanned Barges, COMDTINST M16672.3 (series) has exempted battery powered barge lights from the vertical sector cut-off requirements of the 72 COLREGS. It is only applicable to unmanned barges without machinery for the generation of electricity or with such machinery intended for operation only while moored. The 1980 Inland Rules permanently exempt electric navigation lights on unmanned barges from the vertical sector requirements.

17. Hazardous Locations (46 CFR 111.105).

a. General. Where flammable gases or vapors may be present, such as on the drill floor of a Mobile Offshore Drilling Unit or in the pumproom of a tankship, special precautions must be taken to ensure that

3.G.17 a. (cont'd) electrical equipment is not a source of ignition. Subpart 111.105 of the Electrical Engineering Regulations contains the requirements for electrical equipment and wiring in locations where fire or explosion hazards may exist. In these locations, it is necessary to exercise more than ordinary care with regard to the selection, installation, and maintenance of electrical equipment and wiring. A primary objective of design should be to minimize the amount of electrical equipment installed in hazardous locations. Through the exercise of ingenuity in the layout of electrical installations for hazardous locations, it is frequently possible to locate much of the equipment in less hazardous or in non-hazardous areas and thus reduce the amount of special equipment and installations required.

b. Protection Types. The various methods by which electrical and electronic equipment is made safe for use in hazardous areas may be divided into two major categories: (1) protection by enclosure or other physical separation between the electrical equipment and the hazardous atmosphere; and (2) protection by electrical design (making the circuitry unlikely to produce ignition of the hazardous atmosphere). Examples of the first category include explosion-proof and purged and pressurized enclosures, as well as oil immersion. The second category includes the intrinsically safe and nonincendive safety techniques.

(1) Ignition Protection. Ignition-protection is another type of protection by design. Ignition-protected devices are intended for use aboard recreational boats and uninspected vessels in enclosed spaces that may occasionally contain gasoline vapors. They meet the testing requirements of UL 1500, which are not as stringent as those for explosion-proof or intrinsically safe equipment. Ignition-protected equipment is not suitable for use in hazardous locations on inspected vessels other than oil recovery vessels.

(2) Intrinsically Safe. This is the only method that uses electrical protective measures to prevent ignition from electrical faults. Intrinsically safe equipment is used in both Zones 0 and 1 and Division 1 areas.

(3) Explosion Proof Vs. Flame Proof. Explosion proof enclosures are used in the U.S. and Canada while flameproof enclosures are used elsewhere. Both types of enclosure have flame paths that cool the gases as they escape from the enclosure. What is notable here is that flameproof equipment is designed to meet IEC 60079-1 and/or CENELEC Standard EN50018. With a choice of standards to conform to, there are varying differences in flameproof equipment from country to country.

(4) Type "n" Protection. Type of Protection "n"- (Article 505 of the NEC and IEC 60079-15) Type "n": protection is a type of protection applied to electrical equipment such that in normal operation, the electrical equipment is not capable of igniting in a surrounding explosive gas atmosphere and a fault capable of causing ignition is not likely to occur. This type of equipment is allowed in Europe, U.S. and Canada in Class 1 Zone 2 areas.

3.G.17 c. Classification. National and international codes and regulations classify materials and locations based upon the experimentally determined properties of flammable vapors, gases, liquids, or combustible dusts or fibers that may be present and the likelihood that a flammable or combustible concentration or quantity is present. North American standards identify hazardous locations by Class and Division using the scheme described in Tables 1 and 2 (3.G.17.f). International standards (such as IEC Standard 60079-10) use a different nomenclature, but their classification philosophy is mostly the same.

For Class I locations, gases and vapors are divided into groups A, B, C, or D, depending upon experimentally determined maximum explosion pressure, maximum safe clearance between parts of a clamped joint in an enclosure, and the minimum ignition temperature of the atmospheric mixture. For Class II locations, dusts are divided into Groups E, F, and C, depending upon the tightness of the joints of assembly and shaft openings for preventing entrance of dust into the dust/ignition proof enclosure, the blanketing effect of layers of dust on the equipment that may cause overheating, electrical conductivity of the dust and the ignition temperature of the dust. In general, equipment must be approved not only for the Class, but also for the specific Group of the gas, vapor, or dust that may be present. Flammable and combustible liquid cargoes may be further classified according to their vapor pressure and flashpoint. These liquids may be assigned both a Group and a Grade (Grade designation relates to flashpoint). In cases where differing requirements apply or several different hazardous atmospheres may be present, the most hazardous condition is presumed to exist and the most restrictive requirements should be applied.

Once a specific location is classified, and specific materials that may be present are identified, the permitted types of electrical equipment are easily determined. For example, an area containing gasoline vapors would require Class I, Group D equipment. Where vapors would be present under normal conditions, the area would be a classified as Division 1, and equipment must be suitable for use in a Class I, Division 1, Group D location.

This classification system requires the use of some individual judgment, especially in the designation of "Division." To promote consistency and ensure safety, standard setting bodies and regulatory agencies have developed detailed standards, recommended practices, codes, and regulations applicable to specific situations.

The IEC 60079-XX “Electrical apparatus for explosive gas atmospheres” series of standards are based upon the concept of Zones. These standards separate the North American classification of Division I into Zone 0 and Zone 1. Zone 0 identifies those areas where “flammable gases are present continuously or for long periods of time and takes more restrictive measures to protect against electrical ignition”. Thus only intrinsically safe apparatus or equipment can be used. Explosion-proof and pressurized equipment are not allowed for use in Zone 0 classified areas.

Zone 1 is classified as less hazardous then Division 1. In an area classified as Zone 1, less restrictive practices other than explosion

3.G.17 c. (cont'd) proof or purging can be used. Arcing devices, however, must still be housed inside explosion-proof enclosures.

d. Specific Hazardous Areas. Locations where flammable gases or vapors can exist on commercial vessels include battery rooms, paint lockers, pumprooms and weather deck locations above cargo tanks on tank vessels, mud pit rooms and the drill floor of Mobile Offshore Drilling Units, and operating rooms where anesthetics are administered on passenger vessels and hospital ships. 46 CFR 111.105 defines specific hazardous locations for combustible liquid cargo vessels, flammable liquid cargo vessels, liquid sulphur carriers, inorganic acid tankships, bulk liquefied gas and ammonia carriers, MODU's, vessels carrying coal, and vessels (such as ferries and RO-RO's) with spaces for the carriage of vehicles using gasoline or other highly volatile motor fuels. Typical hazardous location classifications are illustrated in section 3.G.17.d (7). Note the IEC "Zone" approach is also allowed by 46 CFR 111.105 and the NEC.

The Electrical Engineering Regulations define particular areas to be Division 1 or Division 2 locations; there is no "Division 0" in the Division scheme comparable to the IEC Zone 0 designation. In the Division scheme, spaces where the hazard is assumed to be present under normal conditions are classified as Division 1 locations. There is no "higher" classification (i.e., Division 0). Enclosed locations comparable to tank vessel pumprooms typically do not exist in National Electrical Code applications. On shore, such installations are usually located in the weather, and spread-out over a much larger area. In Coast Guard regulations, spaces comparable to "Zone 0" locations such as pumprooms on tank vessels, while not given a Division 0 designation, are permitted only limited electrical equipment (i.e. explosion-proof lights, intrinsically safe systems, and cables) similar to IEC Zone 0 requirements.

Combustible liquids (see definition in 46 CFR 30.10-15) are often referred to as Grade D and Grade E cargoes. Similarly, flammable liquids (defined in 46 CFR 30.10-22) may be classified as Grade A, B, or C cargoes. Due to the high flashpoints of Grade E liquids, vessels carrying only Grade E cargoes need only meet the requirements of 46 CFR 111.105-29 for combustible liquid cargo carriers. The requirements of 111.105-31 apply to vessels carrying combustible or flammable cargo with a closed-cup flashpoint lower than 60°C (140°F), as well as liquid sulphur and inorganic acids. Note that in accordance with 46 CFR 30.10-15 Grade D cargo may fall above or below the 140°F cutoff. Flammable hydrogen sulfide gas evolves from liquid sulphur, and many inorganic acids produce hydrogen gas when in contact with a number of common construction metals.

(1) MODU's. On MODU's, a specific classification for crude oil cannot always be given, since crude is a mixture of widely varying hydrocarbons. Locations are usually, however, designated Group D due to the presence of natural gas. Hydrogen sulfide, which is frequently encountered during drilling operations, has a Group C designation. Drilling operators often utilize electrical equipment that is suitable for both hazard groups C and D, especially when this equipment is readily available, and there is no economic penalty. It should not be inferred from the presence of some Group C equipment that the area has been classified as a

3.G.17.d (1) (cont'd) Group C area. A Group D classification should be adequate when drilling in a region where the known or suspected mixture of hydrogen sulfide and natural gas is less than 25 percent hydrogen sulfide (by volume). Coal carriers and vessels carrying bulk grain and other agricultural products may be subject to dust explosion hazards. Just as with flammable gas or vapor explosions, the initial ignition source of a dust explosion may be a small spark or flame. However, an initial explosion may dislodge settled dust from the surrounding area that may then be ignited by the residual energy to cause a second and larger explosion.

Undispersed dust that has accumulated in layers will not explode but may burn or char; generating heat that may ignite dispersed dust. NEC Article 502 lists the primary hazards that must be avoided as the admission of dusts into electrical equipment enclosures, reaching the heat of ignition due to the insulating characteristics of accumulated dust, and the formation of current paths of conductive dusts.

Explosion hazards due to agricultural dusts are not specifically addressed in the Electrical Engineering Regulations. However, 46 CFR 111.105-17 and 111.105-35 do give the requirements for electrical installations in Class II locations and specific requirements for vessels carrying coal. NVIC 9-84

(2) Agricultural Dust Areas. Electrical Installations in Agricultural Dust Locations further defines the classification of hazardous areas due to agricultural dusts. It must be remembered that the enclosure protection method is different for dust than it is for a gas or vapor, and that "dust ignition-proof" and "explosion-proof" are two different concepts. For a dust, the enclosure keeps dust out and does not build-up excessive temperatures when blanketed with dust. For a vapor, the enclosure allows vapor to enter and be ignited, yet prevents the internal explosion from propagating to the surrounding atmosphere. Equipment acceptable for use in a dust atmosphere is not generally suitable for use in a gas atmosphere, and vice-versa.

(3) Coal. Vessels carrying coal may be subject to the double hazard of explosive gas as well as explosive dust. Freshly mined coal releases methane gas that had been contained within the pores of the coal. Release of methane can continue for days and even weeks after the coal is mined. If freshly mined coal is stored in an enclosed space, such as a bunker or closed hold on a ship, this methane may collect in sufficient quantity to cause an explosion.

(4) Battery & Paint Stowage Rooms. Battery rooms and paint stowage or mixing spaces must meet the electrical requirements of 46 CFR 111.15 and 111.105-41 & 43, respectively. The regulations do not explicitly state that these spaces are defined as hazardous. However, equipment within these spaces must be suitable for installation in Division 1, Zone 0 or Zone 1 locations. The hazardous locations are considered to exist only inside these spaces; the regulations do not define a hazardous area as extending any specific radius from doors, hatches, or other openings into these spaces. The use of only explosion-proof or

3.G.17.d (4) (cont'd) intrinsically safe electrical equipment and the avoidance of open flames and sparking near such openings is, however, strongly recommended.

(5) Armored Or Mineral Insulated Cable. The Electrical Engineering Regulations require armored or mineral insulated cable for most installations in hazardous locations. Unarmored cable is permitted for intrinsically safe systems, portable equipment, applications requiring flexible cable, and in Division 2 locations. Industrial systems may use an armored type cable construction, but the cable must also meet the installation and flammability test requirements of 46 CFR 111.107-1(c) if it penetrates a deck or bulkhead. Conduit systems that meet the applicable requirements of the NEC provide an equivalent level of safety and can be permitted.

(6) Stowage Of Vehicles With Gasoline In Tanks. The minimum safety requirements for electrical equipment located in spaces intended for the stowage of vehicles with gasoline in their tanks and batteries connected are contained in 46 CFR 111.105-39. These requirements apply to spaces designated as specially suitable for vehicles" on passenger and cargo vessels It should be noted that SOLAS II-2/37.1.6, 37.2.2, and 37.3.2 contain somewhat different requirements for ventilation and precautions against ignition of flammable vapors in "special category spaces", which are those vehicle stowage spaces on passenger vessels normally accessible to passengers. Regulations 38.3 and 38.4 address these issues for other vehicle cargo spaces on passenger vessels. Similarly, SOLAS 11-2/53.2.3 and 53.2.4 state the ventilation and ignition prevention requirements for vehicle spaces on cargo vessels, including RO/RO spaces. While 46 CFR 111.105-39 is considered to provide sufficient minimum requirements for the prevention of ignition by electrical equipment, closed spaces for fueled vehicles should be provided with ventilation per ABS Section 5-10-4/3 and SOLAS 11-2/53.2.3.

(7) Specified Hazardous Location Table.

Specified Hazardous Locations				
Locations	Class I Div. 1	Class I Div.2	Class II	Class III
Cargo Tanks*	NA	NA	NA	NA
Cargo Handling Rooms*	NA	NA	NA	NA
Cofferdams*	NA	NA	NA	NA
Battery Rooms	X	NA	NA	NA
Paint Storage Rooms	X	NA	NA	NA
Paint Mixing Rooms	X	NA	NA	NA
Oil Storage Rooms	X	NA	NA	NA
Anesthetic Handling Area	X	NA	NA	NA
Tank Vessel Weather deck 10 ft. Rule	X	NA	NA	NA
Tank Vessel Weather deck Cargo Block	X	NA	NA	NA
Flammable Gas Handling Room*	NA	NA	NA	NA

Specified Hazardous Locations				
Locations	Class I Div. 1	Class I Div.2	Class II	Class III
Flammable Liquid Handling Room*	NA	NA	NA	NA
Adjacent to Class I, Div. 1 w/Communication	X	NA	NA	NA
Tank Vessel Enclosed Space Adjacent to Cargo Tank*	NA	NA	NA	NA
Grain Handling Area	NA	NA	X	NA
Coal Handling Area	NA	NA	X	NA
Coal Pulverizing Area	NA	NA	X	NA
Carpenter Shop	NA	NA	NA	X
Fiber Handling Area	NA	NA	NA	X
Vent Duct	Same as Space Served			
Tank Vessel Cargo Hose Stowage Space*	NA	NA	NA	NA
Space Containing Cargo Piping only, on Tank Vessels*	NA	NA	NA	NA
LFG Barrier Space*	NA	NA	NA	NA
Enclosed Space Opening to Weather Deck Haz. Area	X	NA	NA	NA
Tank Vessels Within 8’ of Cargo Containment System	X	NA	NA	NA
Tank Vessels, Within 10’ of Cargo Handling Room Door or Vent	X	NA	NA	NA
Vessel Fuel Oil Tanks, 10’ Rule Does not Apply	X	NA	NA	NA
Tank Vessel, A-D Cargoes, Area From 3m to 5m of PV Valves	(see SOLAS II-2/59.1.7.2)			
	NA	X	NA	NA
Tank Vessel, A-D Cargoes, Area From 3m to 10m of Vent Outlets for Free Flow of Vapors and H.V. Vents for Loading or Discharge	(see SOLAS II-2/59.1.9.3)			
	NA	X	NA	NA

Note: These areas are considered more hazardous than Class I, Division 1 and therefore carry specific requirements in 46 CFR 111.105-29, 111.105-31, and 111.105-32

e. Electric Heat Tracing. Questions frequently arise concerning the acceptability of electric heat tracing in hazardous locations. Heat tracing is permitted in Division 2 locations by NEC Article 501-10(b)(1). Since the NEC requires wiring in Division 1 locations to be in conduit, it does not recognize heat tracing cable installations in Division 1 locations. However, since shipboard Division 1 installations use cable, not conduit, and Subchapter J does not reference the NEC for Division 1 wiring methods, electric heat tracing may be used in Class I Division 1 locations. The heating cable must not exceed 80% of the auto-ignition temperature in degrees Celsius of any gas or vapor involved on any surface, which is exposed to the gas or vapor, when continuously energized at the maximum rated ambient temperature. Any thermostats, controllers, power supplies,

3.G.17 e. (cont'd) and other associated equipment must be provided with enclosures approved for Class I Division 1 locations or be located outside of the designated hazardous areas.

f. Hazardous Area Drawings. Hazardous area drawings and a corresponding bill of materials are normally reviewed by the Marine Safety Center, or cognizant OCMI, prior to the installation of any electrical equipment in a hazardous location. Hazardous area drawings and equipment lists should be maintained to reflect the current arrangement and inventory of electrical equipment in those locations.

A proper hazardous area drawing is an arrangement plan showing the boundaries and classification of all hazardous areas, and the location of all electrical equipment in those areas. It should be accompanied by a bill of material or equipment list that identifies each item by manufacturer, model number, and Class and Group for which approved, and should provide evidence of approval by a nationally recognized testing laboratory. In addition, the operating temperature of the electrical equipment must not exceed the auto-ignition temperature of the gases or vapors likely to be present. Confirmation of equipment temperature is usually beyond plan review capabilities, since it is not usually provided in approval listings. This information is required on the label of explosion-proof equipment in the form of an operating temperature identification code number on the equipment if the temperature exceeds 100 degrees C. (see Table 3 at 3.G.17.j(2)). Normally, the only equipment installed in hazardous locations having a temperature code will be incandescent lighting fixtures and motors. When such equipment is used in a machinery space, a 50 degrees C. ambient is assumed. The labeled operating temperature is usually referenced to a 40 degree C. ambient. Unless the equipment has thermally actuated sensors that limit the operating temperature to that specified on the label, equipment in high ambient temperature locations should be derated.

NVIC 8-84, "Recommendations for the Submittal of Merchant Vessel Plans and Specifications" provide additional guidance on hazardous area submittals.

RECOMMENDED PLAN REVIEW CHECK-OFF FOR HAZARDOUS LOCATIONS

1. Has sufficient information been provided?

(a) Hazardous cargoes;

(b) An arrangement plan identifying hazardous and non-hazardous areas, cargo system or hazards, electrical equipment type and locations;

(c) A complete and detailed Bill of Materials;

(d) Elementary and one-line wiring diagrams, showing all wiring;

(e) Electrical installation details;

(f) Nationally Recognized Testing Laboratory (NRTL) label or listing for explosion proof (EP) and intrinsically safe (Is) equipment and systems; and

3.G.17.f.1 (g) Maximum temperature ratings of electrical equipment in hazardous areas.

2. Identify hazardous characteristics:

(a) Class and group;

(b) Flashpoint and grade;

(c) Minimum ignition temperatures; and

(d) Special requirements, including material compatibility.

3. Confirm boundaries of hazardous locations and suitability of equipment installed.

4. Confirm that the installation meets:

(a) Subchapter J;

(b) Intended application by a NRTL (currently UL, FM, CSA, and MET are Acceptable to the Coast Guard)

(c) Specific requirements for the cargo/material; and

(d) General considerations of this NVIC.

Table 1

Classification of Properties of Hazard-Producing Materials

Class I -- Locations where flammable gases or vapors may be present, including:

Group A: Atmospheres containing acetylene.
Group B: Atmospheres such as butadiene, ethylene oxide, propylene oxide, acrolein, or hydrogen (or gases or vapors equivalent in hazard to hydrogen)
Group C: Atmospheres such as cyclopropane, ethyl ether, ethylene, or gases or vapors of equivalent hazard.
Group D: Atmospheres such as acetone, alcohol, ammonia, benzene, benzol, butane, gasoline, hexane, lacquer solvent vapors, naphtha, natural gas, propane, or gases or vapors of equivalent hazard.

Class II -- Locations where combustible dust may be present, including:

Group E: Atmospheres containing combustible metal dusts or other combustible dusts or similarly hazardous characteristics.

Group F: Atmospheres containing combustible carbon black, charcoal, coal, or coke dusts.
Group G: Atmospheres containing combustible agricultural or plastic dusts.

Class III -- Locations where easily ignitable fibers or flyings, such as cotton fibers, sawdust, and wood shavings, may be present.

3.G.17.f (cont'd)

Table 2

Classification of the Probability that Material May Be Present in Flammable or Combustible Quantities

Division 1: (Zone 1)	Where material can exist under normal operating conditions, or frequently because of repair, maintenance, or leakage.
Division 2: (Zone 2)	Where material can exist under abnormal conditions (accidental rupture or breakdown, abnormal operations, etc.), or locations adjacent to a Division 1 location where material may occasionally be present.

Note: International standards use the term "Zone" instead of "Division" and include a "Zone 0" designation for locations where vapors are assumed to be present, such as inside a tank or in a tankship pumproom. A comparable "Division 0" does not exist in the Division classification scheme. Coast Guard regulations achieve the same effect as a "Division 0" by limiting electrical installations in applicable locations to the type permitted for Zone 0 locations. Many domestic standards as well as Coast Guard regulations now include the Zone approach.

g. Equipment. Specific requirements for electrical equipment in hazardous locations are contained in 46 CFR 111.105. In that subpart, certain equipment is required to be listed an independent laboratory recognized by the Commandant (G-MSE-3) for use in the hazardous location in which it is located. "Listed" means equipment included in a list published by an U.S. Coast Guard accepted independent test laboratory concerned with product evaluation, that maintains periodic inspection of listed equipment and whose listing states either that the equipment meets appropriate standards or has been tested and found suitable for use in a specified manner.

(1) Division 1 Equipment. The following general considerations apply to equipment selection and installation: Division 1 equipment is satisfactory for Division 2 applications with the same Class and Group. Note that the explosion-proof equipment label may not say "Division I." If the label says it is suitable for Class I Group (__) locations, it means it is suitable for both Division 1 and Division 2 locations.

(2) Class 1 Division 2 Make And Break Contacts. NEC Section 501-3(b)(l) requires devices in Class I, Division 2 locations, with make-and-break contacts to be within an enclosure approved for Class I, Division 1 locations or to be in a general-purpose enclosure with the current interrupting contacts either immersed in oil, enclosed in a hermetically sealed chamber, or in only nonincendive circuits.

Examples of make-and-break contacts include relays, circuit breakers, servo-potentiometers, adjustable resistors, switches, connectors, and motor brushes. A nonincendive circuit is a

3.G.17.g (2) (cont'd) circuit in which any arc or thermal effect produced under intended operating conditions of the equipment is not capable of igniting the specified flammable gas or vapor-air mixture. A hermetically sealed device is one which is manufactured so that it is completely sealed against entrance of an external atmosphere and in which the seal is made by soldering, brazing, welding, or fusion of glass, or the like.

(3) General Purpose Enclosures. NEC Section 501-3(b)(2) permits general-purpose enclosures to be used in Class I, Division 2 locations for resistance devices and similar equipment used with meters, instruments, and relays provided such equipment is without make-and-break or sliding contacts and the maximum operating temperature of any exposed surface will not exceed 80% of the ignition temperature of the gas or vapor involved.

(4) Belt Drives. Belt drives are acceptable if the belt is conductive and the equipment is grounded in accordance with NFPA 77. Acceptable belts have a resistance of approximately 6 mega ohms or less over an eight inch length, as determined by an industry standard test procedure, and are commonly designated as "static conductive."

(5) Cables. Cables must not be located in any tanks containing flammable or combustible liquids, except to supply equipment or instrumentation specifically designed for, and compatible with, such location, and whose function requires installation in that location.

(6) Vent Ducts. Vent ducts have the same classification as the space they serve. Fans for ventilating hazardous locations must be nonsparking as defined in ABS 4-8-3/11. Nonsparking construction is not generally indicated by an independent laboratory listing, and must usually be verified by review and/or inspection. Vent fan motors must either be approved for the hazardous location or located outside the duct, 10 feet from the duct termination, in a non-hazardous area.

(7) Alloys. Alloys of aluminum, magnesium, and titanium, when struck by rusty steel, react with the iron oxide to produce a highly exothermic "thermite reaction." Care must be taken to provide adequate physical separation and/or surface coatings where these metals are used in moving components around steel. The most important thing to remember is that equipment rated for Division 1 or 2 can be used in Zone 1 or 2 respectively. However, equipment rated for Zones cannot be installed in areas classified as Division 1 or 2.

h. Intrinsic Safety and Nonincendive Systems. For low power applications, such as instrumentation, control, and operation of solenoid valves, the use of intrinsically safe and nonincendive systems can reduce the likelihood of fire or explosion due to the ignition of flammable gas mixtures by electrical arcs or high temperatures. However, safety depends on their proper application, as these two forms of protection are not equal.

3.G.17 h. (cont'd) Section 501-3 of the NEC states: In Class 1, Division 2 locations, switches, circuit breakers, and make-and-break contacts shall have enclosures approved for Class 1, Division 1 locations. EXCEPTION: General-purpose enclosures shall be permitted, if current-interrupting contacts are... in circuits that under normal conditions (emphasis added) do not release sufficient energy to ignite a specific ignitable atmospheric mixture, i.e., are nonincendive. The word "nonincendive" means that under the conditions specified, there is insufficient energy to cause ignition. Nonincendive systems are only permitted in Division 2 and non-hazardous locations.

(1) Nonincendive Systems. Nonincendive circuits are similar to intrinsically safe circuits, but no fault conditions or safety factors are applied, as the existence of a hazardous atmosphere in a Division 2 location is itself considered a fault condition.

In the past, much of the nonincendive circuitry that found its way into Division 2 locations was neither designed nor intended for use in hazardous locations. Only when a Division 2 application arose for a specific item was the circuit examined to see if it was nonincendive. Regulatory bodies typically reviewed manufacturer's analyses to see if voltage and current levels fell below the appropriate ignition curve with a reasonable margin of safety. If they did, the circuit was accepted to be nonincendive.

Today, much of the equipment installed in Division 2 locations has been designed to be nonincendive. This is especially true of sophisticated electronic equipment used in the drilling industry. Furthermore, manufacturers are recognizing the value of independent third-party approvals. In North America, standard setting bodies, such as the Instrument Society of America, Underwriters Laboratories Inc., and the Canadian Standards Association, have published or are presently developing safety standards for nonincendive equipment. Third-party certification agencies are using these standards to evaluate and list or label nonincendive equipment.

Listed or labeled equipment provides the end user with a greater degree of confidence that the nonincendive equipment has been properly evaluated and will not present an unnecessary risk of fire or explosion. However, manufacturer certification of nonincendive circuits is acceptable; certification by a third-party testing agency is not required, and many acceptable nonincendive circuits bear no label or other marking by these agencies.

(2) Intrinsically Safe Systems. Section 500- 4(e) of the 1987 NEC states: Intrinsically safe apparatus and wiring shall be permitted in any hazardous (classified) location for which it is approved. Intrinsically safe equipment and wiring shall not be capable of releasing sufficient electrical or thermal energy under normal or abnormal (emphasis added) conditions to cause ignition of a specific flammable or combustible atmospheric mixture in its most easily ignitable concentration. Additional guidance on intrinsically safe installations is expected to be included in Article 504 of the NEC.

3.G.17.h (2) (cont'd) Intrinsically safe portable battery-powered equipment, such as walkie-talkies and combustible gas detectors, are evaluated based on their internal circuitry. However, equipment that is interconnected to other equipment, such as to the vessel's electrical system, is evaluated on a system basis. Since evaluations for intrinsic safety consider failure modes, faults in connected apparatus such as power supplies, meters, and recorders (regardless of their location, i.e., hazardous or non-hazardous) may affect energy levels in the circuit, and are fully evaluated.

In determining available energy levels, abnormal conditions include opening, shorting, and grounding of wires connected to the enclosures in the intrinsically safe portion of the system. In North America, two "reasonable" simultaneous faults are considered in assessing available electrical and thermal energy. Industry standards give detailed criteria for determining reasonable failure modes. Evaluations usually involve an in-depth circuit analysis, supplemented by actual ignition testing.

Intrinsically safe systems and portable equipment must be tested and approved for the intended application by a nationally recognized testing laboratory. For installed systems, listing reports should be reviewed to ensure that restrictions placed upon the equipment by the certification agency are recognized in the installation. In general, switches and other simple devices that do not store energy can be in hazardous locations when used with approved intrinsic safety (Zener) barriers that limit the energy in the circuit.

(3) Installation. Safety also depends on proper installation. It is necessary to ensure that the system is connected correctly and that unsafe energy levels are not induced in intrinsically safe circuits by nearby non-intrinsically safe circuits. In evaluating intrinsically safe systems, it is important to know the restrictions imposed by the certification agency, and to have the installation information available that verifies that the restrictions, such as installed cable impedance, have been met. The following installation requirements should be followed:

(a) Cables for use in intrinsically safe installations should meet the standards of 46 CFR 60-1. However, since intrinsically safe circuits are inherently power limited, cable constructions other than those specified in 111.60 may be accepted, provided the cable has an adequate voltage rating.

Many specialty cable types, which are not constructed to meet the standards referenced in 46 CFR 111.60, are used in intrinsically safe circuits, particularly in industrial systems such as down-hole well testing instrumentation. Flame propagation is a concern with any cable that penetrates a deck or bulkhead. If a particular cable type is self-extinguishing, but cannot comply with the IEEE-45 or IEC 60332-3 (Cat. A) fire tests, then it may be run singly (not in or near bundles or cable trays with other cables).

3.G.17.h(3)

(b) Equipment in weather locations must be made watertight.

(c) Cable insulation must be compatible with the environment. Some installations may be in cargo tanks.

(d) As a general rule, conductors should be no smaller than #18.

(e) Cables for intrinsically safe systems must be isolated from other cables to prevent compromise due to induction or insulation breakdown. This is to be accomplished by maintaining two inch spacing, or by using grounded metal barriers or shielded cable.

(f) At a termination, intrinsically safe circuits must be isolated from other intrinsically safe circuits, other low-energy level circuits, and all power circuits (see ISA RP 12.6).

(g) More than one intrinsically safe circuit of the same system may be run in a multiconductor cable (see ISA RP 12.6).

(h) Cables containing conductors for intrinsically safe systems must not contain conductors of non-intrinsically safe systems.

(i) In general, an intrinsically safe barrier should be located in a non-hazardous location. If it is in a hazardous location, the barrier itself must be suitable for the location.

(j) Energy storing equipment must be explicitly approved by the certification agency when used with a barrier.

(k) Passive devices that do not store energy, such as switches, thermocouples, resistances, and LED's may be connected to barriers without further certification, provided they are not part of a unit containing other electrical circuits.

For low power applications, intrinsically safe systems offer advantages over "add-on" protection, such as explosion-proof or purged and pressurized enclosures.

A missing or loose bolt, a scratched flange, an unpoured cable seal, a stuck interlock, or mechanical damage does not jeopardize intrinsic safety. The intrinsically safe circuit is less maintenance dependent and provides a lifetime of protection with relatively little care.

Although the Electrical Engineering Regulations reference the 1976 edition of ISA RP 12.6 for cables in intrinsically safe systems, that standard may also be used for other aspects of intrinsically safe installations. The guidelines of the 1995 revision of this standard may also be followed. This later edition contains information on the combination of intrinsically safe apparatus under the entity concept, which allows users to determine acceptable combinations of intrinsically safe apparatus and connected associated apparatus that have not been tested and

3.G.17.h (3) (cont'd) approved for interconnection in such combination. This approach requires each intrinsically safe apparatus to have a control drawing that specifies parameters for the selection of the associated apparatus. The manufacturer provides the control drawing to specify the allowed interconnections between the intrinsically safe and associated apparatus.

i. Purged Or Pressurized Equipment. Purged or pressurized equipment and enclosures are permitted by the Electrical Engineering Regulations (46 CFR Subchapter J) for the protection of hazardous area equipment. The regulations require that this type of equipment be constructed to the National Fire Protection Association (NFPA) Standard 496, Purged and Pressurized Enclosures for Electrical Equipment.

Purged or pressurized systems pressurize the atmosphere within an enclosure with a non-hazardous gas (usually air from a non-hazardous location), thereby preventing the hazardous atmosphere from coming in contact with electrical equipment within the enclosure.

The NFPA standard addresses pressurized instrumentation and other small enclosures in Class I locations, power equipment enclosures in Class I locations, pressurized instruments and other small enclosures in Class II locations, and pressurized power equipment in Class II locations. The standard defines pressurization and purging as follows:

Pressurization: The process of supplying an enclosure with clean air or an inert gas with or without continuous flow at sufficient pressure to prevent the entrance of combustible dusts.

Purging: The process of supplying an enclosure with clean air or inert gas at sufficient flow and positive pressure to reduce to an acceptably safe level the concentration of any flammable gas or vapor initially present and to maintain this safe level by positive pressure with or without positive flow.

(1) Types. There are three types of purging protection in NFPA 496, Type X, Type Y, and Type Z. Type Z reduces the classification within an enclosure from Division 2 to nonhazardous. With type Z purging, a hazard is created only if the purge system fails at the same time that the normally nonhazardous areas become hazardous. For this reason, it is not considered essential to remove power from the equipment upon failure of the purge system.

Type Y purging reduces the classification within an enclosure from Division 1 to Division 2. The equipment and devices within the enclosure must be suitable for Division 2. This requires that the enclosure not contain an ignition source under normal conditions. Thus, a hazard is created within the enclosure only upon simultaneous failure of the purge system and of the equipment within the enclosure. For this reason, it is not considered essential to remove power from the equipment upon failure of the purge system.

Type X purging reduces the classification within an enclosure from Division I to nonhazardous. Because the probability of a hazardous atmosphere external to the enclosure is high and the

3.G.17.i (1) (cont'd) enclosure normally contains a source of ignition, such as a hot element or arcing contact, it is important that any interruption of the purging results in deenergizing the equipment. Also, it is essential that the enclosure be tight enough to prevent the escape of sparks. When type X purging is used in purged power equipment enclosures in Class I locations, power to the equipment should be immediately removed upon loss of pressurization, unless immediate loss of power would result in a more hazardous condition, such as not allowing for the safe shutdown of a process or system.

The NFPA standard presents some diagrams of acceptable installations for Types X, Y and Z purging. These diagrams are shown in 3.G.17.i(2). The NFPA standard requires that a nameplate be mounted on the enclosure in a prominent location so that it can be seen before someone opens the enclosure. The nameplate should contain the following statement (or equivalent):

"Enclosure shall not be opened unless the area is known to be nonhazardous or unless all devices within have been de-energized. Power shall not be restored after enclosure has been opened until enclosure has been purged for minutes." (Note: The blank must be filled-in by the manufacturer with the proper purge time).

It is apparent from this requirement that purged or pressurized enclosures should be designed in such a manner that normal operation of the equipment does not require that the enclosure be opened. Therefore, openings in the enclosures for inserting computer disks or slots for computer printouts and normal procedures that require the enclosure to be opened to retrieve data or take readings is not acceptable.

All three types of purging require the warning nameplate. Type X purging generally requires an interlock that immediately de-energizes all circuits that are not suitable for Division 1 areas. Type Y purging does not require an interlock but requires an alarm which operates when the enclosure is opened. Type Y is suitable for Division 1 if the internal components are suitable for Division 2. Type Z purging is suitable for Division 2 and requires an alarm, but does not place restrictions on internal components.

Purged or pressurized equipment may be used in lieu of explosion-proof equipment for all hazardous locations. Purged or pressurized equipment may not be used as a substitute for intrinsically safe apparatus. Purged or pressurized systems need not be approved by an independent testing agency, but are reviewed and approved for the particular application during vessel plan review.

Special care must be taken to ensure that the protective gas is from a non-hazardous source and cannot be contaminated by a hazardous source. Vent fan operation should be monitored by airflow, not simply by motor operation. Where it is necessary to open a purged or pressurized enclosure, for maintenance/repair, gas detection equipment maybe required so that a flammable atmosphere does not become trapped within the enclosure.

3.G.17.i (1) (cont'd) NFPA 496 recognizes the use of purged control rooms in Class I locations and pressurized control rooms in Class II locations. The requirements for control rooms may be used both for spaces that are structurally part of the vessel and for containerized compartments such as may be used for industrial functions aboard a MODU. Compressed air operated lighting fixtures (turbine lights) are both powered and purged by the air supply. These fixtures are acceptable for use in cargo handling rooms.

(2) Purged and Pressurized Drawing.

Typical Type X Purging

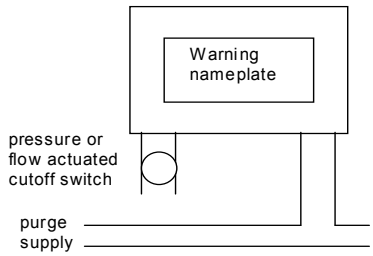

Typical Type Y and Type Z Purging

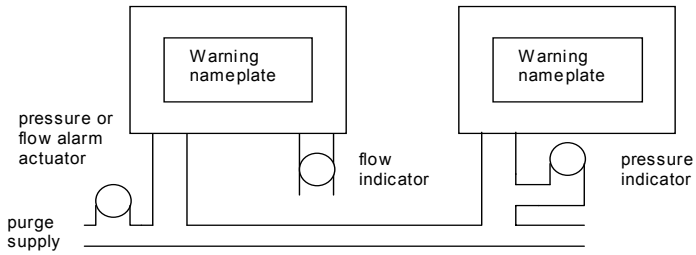

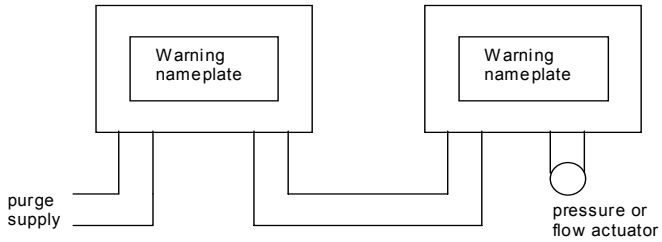

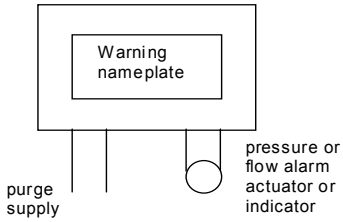

j. Explosion-Proof Equipment.

(1) Enclosures. When electrical equipment is installed where flammable gases and vapors may be present, an "explosion-proof"

3.G.17.j (1) (cont'd) enclosure may be used to allow the equipment to operate safely. The explosion-proof enclosure concept recognizes that flammable gases and vapors may enter the enclosure, and assumes that a source of ignition will create an internal explosion. The enclosure is designed to withstand the explosion and prevent it from propagating to the hazardous atmosphere surrounding the enclosure. Explosion-proof enclosures are not designed to be gastight, but are normally intended to "breathe." Flammable gases or vapors may enter an enclosure as it breathes due to changes in atmospheric pressure, ambient temperature, or both.

Conversely, gastight equipment is not explosion-proof. Explosion-proof enclosures usually have covers that can be removed or opened for making connections and adjustments, and for maintenance. The dimension of the gap between an enclosure's flanges and metal-to-metal joints determine its effectiveness. An explosion will propagate through this gap if the gap's width is greater than the maximum experimental safe gap (MESG). If the gap is less than the MESG, the velocity of the emerging jet of hot gases and the velocity of the external gases mixing with the jet are so great that cooling takes place and ignition cannot occur. When the hot gases from an explosion pass through this region, some energy is absorbed by the expansion of gases (refrigeration effect), and hot gases mixing with cool gases outside of the enclosure absorb some energy. Sufficient amount of energy must be transferred from the hot gases to the surrounding air or enclosure; otherwise, an explosion will occur.

Several explosion-proof enclosure cover types are used, depending on their application. The most simple and effective cover is a threaded joint. When an explosion occurs, the cover threads are forced tight against the body threads. Hot gases are cooled as they spiral along these threads. A gasket under the cover's flange is located outside of the cooling region and does not interfere with the metal-to-metal contact of the threads. Other types of enclosure openings or accesses include flanged and cylindrically shaped openings. These enclosures use precision-machined metal-to-metal joints that provide a straight path from inside the enclosure to the outside atmosphere. During an explosion, numerous cover screws prevent flange and enclosure distortion. Explosion-proof equipment in weather locations must be made watertight or waterproof. Explosion-proof enclosures are not normally designed to be watertight. In making these enclosures watertight, care should be taken that there is not interference with the flame-quenching surfaces and that gaskets are external to these surfaces.

When a flame ignites a gas, it may result in an explosion that causes a large increase in pressure. Due to the rapid increase in pressure, less energy is required for further ignition and flame propagation. An explosion occurs rapidly, causing a front between burned and unburned compressed gas. If the expanding gas is restricted, channeled, or impeded, pressure piling will occur. Pressures can occur which are ten times higher than pressures that occur when there is no impediment to expansion. Pressure piling is particularly serious in pipes and conduit. To reduce the effects of pressure piling, cable seal fittings must be

3.G.17.j (1) (cont'd) installed within eighteen inches of the enclosure for each conduit. Where two explosion-proof enclosures are connected and located less than 36 inches apart, only one seal is necessary in the conduit between them.

(2) Equipment. Equipment which is required by the Electrical Engineering Regulations to be explosion-proof must be specifically tested and approved by a nationally recognized testing laboratory for use in a Class I Division 1 location and the group of the hazard present, and be labeled as such.

In typical test programs, the enclosure is placed in a test chamber that has explosion pressure-recording devices attached to it. Both the enclosure and the chamber are charged with a specified gas. The gas inside the enclosure is ignited, and the resulting explosion is observed for propagation to the surrounding chamber's atmosphere. The explosion tests are repeated over the entire explosive range of the gas or vapor's fuel-air mixture. The enclosure must withstand the internal pressure from the explosion without bursting or loosening its joints. Explosion damage to equipment inside the enclosure must not occur during testing unless the damaged equipment can readily be replaced. All tests are conducted using maximum loads, short circuit, or worst-case conditions. Typically, ten tests are conducted over the entire flammable range for each device. Enclosures are tested for a period of one (1) minute using a hydrostatic pressure based on the max observed internal explosion pressure. Seals must withstand for one (1) minute a hydrostatic test pressure of four times the maximum explosion pressure.

Equipment that generates heat is evaluated to ensure that its surface temperature is not high enough to cause auto-ignition of the surrounding hazardous atmosphere. North American practice recognizes 14 temperature ratings for Class I locations. The Class I temperature ratings are listed in NEC Table 500- 5(e) and the Class II temperature limits are in NEC Section 500- 5(f).

TABLE 3
NEC ART. 500 - TABLE 500-3(b)

MAX. TEMP		
°C	°F	MARKING
450	842	T 1
300	572	T 2
280	536	T 2 A
260	500	T 2 B
230	446	T 2 C
215	419	T 2 D
200	392	T 3
180	256	T 3 A
165	329	T 3 B
160	320	T 3 C
135	275	T 4
120	248	T 4 A
100	212	T 5 *
85	185	T 6 *

Marking shall not exceed auto ignition temp of the atmosphere encountered.
* Non-heat producing equipment, with a temp of 100°C or less, need not be marked.

3.G.17.j(2) (a) Flame Arresters. Flame arresters are sometimes used in explosion-proof enclosures to reduce maximum explosion pressure and to protect any incoming air lines. Types of flame arresters include porous metal plugs made of sintered metal, a baffle-type breather similar to an automobile muffler, a special fitting with a loosely fitted thread, and a spiral wound corrugated metal fitting. These configurations causes the flame to spread through paths which cool the gases by heat transfer to the metal from the atmosphere or make the escaping explosion's hot gases turn sharp corners, allowing them to cool.

(b) Explosion-Proof Receptacles & Plugs. Explosionproof receptacles and plugs are designed as a pair. Mechanical interlocking is used between the plug and receptacle. When a plug is inserted, electrical contact cannot be made until the automated plug and receptacle assembly has established its explosionproof integrity. To prevent explosions from propagating, many threads are usually engaged before electrical contact is made or broken.

An explosionproof enclosure is not effective without sealed conductor entrances. Seal fittings allow an explosion to be contained within an enclosure; to prevent pressure piling and prevent the transmission of gases or vapors between enclosed electrical systems install in Division 1, Division 2, and ordinary locations. Seal fittings are usually attached by a short piece of rigid conduit to an enclosure for switches, circuit breakers, fuses, relays, resistors, or other apparatus which may produce arcs, sparks, or a high temperature. Not more than eighteen (18) inches of pipe or rigid conduit may be used, and at least five (5) full nipple threads must be engaged at each end. Explosionproof unions, couplings, elbows, capped elbows, and conduit bodies are the only permitted fittings between the sealing fitting and the enclosure. All such components, including the seal fitting and seal compound, must be approved by the testing laboratory for the intended purpose. Seal fittings are either shop fabricated or poured in the field. The cable gland is a relatively new type of seal. Use of a cable gland allows for a cable to be assembled in a clean shop environment and for simple field connection and installation. A more traditional sealing method uses a "poured" seal, which is completed in the field. The seal is poured after the cables have been brought into the enclosure. Mineral insulated cables require a different type of explosionproof seal fitting than shipboard marine cables.

k. Alterations &/or Repairs. Alterations to explosionproof equipment may destroy explosionproof protection. Explosionproof enclosures approved for certain applications, such as the installation of terminal strips, relays, etc., and may be internally modified to meet these intended applications within the limits specified in the approval. Explosionproof assemblies may not be modified in any way.

Enclosure modifications must are limited so that they do not affect piling from internal volume changes, impair flame-quenching paths and

3.G.17. k. (cont'd) surfaces, or reduce enclosure structural strength. Alterations different from the configuration, as tested by UL, FM, CSA, or other approved laboratories, void the approval.

Equipment that is certified for hazardous locations should usually be repaired by a qualified facility. Product certification agencies usually qualify repair facilities that have demonstrated their knowledge, expertise, and capability to repair explosionproof equipment. Each facility is qualified to repair specific types of equipment such as motors, generators, telephones, etc.
When the explosionproof equipment is repaired, a label is usually affixed to indicate that the equipment conforms to the same rules that applied when it was new. The following guidelines can be used to maintain explosionproof equipment:

(1) All cover screws and bolts must always be tight while circuits are alive. Leaving one screw or bolt loose can render equipment unsafe. Bolts or screw types other than those provided with the equipment should not be used.

(2) Hammers and other tools must not be allowed to damage threaded joints or flat machined surfaces of flanged joints. All surfaces that form part of a flame path must be protected from scratches and other mechanical defects.

(3) Flange surfaces and threaded joints should be cleaned free of old grease and other foreign materials. An appropriate light non-flammable lubricant should be applied to both sides of the joint immediately before assembly. When reassembling, there should be no foreign particles on joint surfaces.

(4) Threaded covers, flat joints, surfaces, rotating shafts, bearings, and operating shafts should be lubricated to protect against corrosion. Abrasives or files should never be used to remove corrosion products from threaded or flanged joints. Equipment that is corroded should be replaced.

(5) Explosionproof equipment must not be modified, except as allowed by the approval laboratory, and the equipment nameplate should not be obscured.

18. Industrial Systems (46 CFR 111.107).

a. Philosophy. Subpart 111.107 of the Electrical Engineering Regulations states that systems on Mobile Offshore Drilling Units that are used solely for the industrial function of the unit (drilling) may be considered as industrial systems. Industrial systems need not be restricted to MODU's, nor must they be related to petroleum exploration and exploitation functions; the concept of industrial systems can be extended to systems, which serve only an industrial function on other types of vessels. Subchapter F, Marine Engineering, 46 CFR 56.01-1(c), provides alternative requirements for piping and pressure vessels in industrial systems on MODUs. However, the Marine Safety Manual indicates that this can be extended to other vessels in individual cases under the general equivalency regulations if the designer prefers to meet the requirements of 58.60. Similarly, 111.107 can be extended to other industrial systems. An example of

3.G.18. a. (cont'd) such an industrial system is the crane power generation and distribution system on a craneship. Unlike the machinery (piping) design, the electrical aspects of industrial systems are not covered by a registered professional engineer's certification. Compliance with 46 CFR 111.107 must be established by plan review and/or inspection.

b. Generators. Industrial systems may be provided with dedicated generators or they may be supplied by the ship's service power distribution system. Where any generator, installed or portable is tied to the main switchboard so that it can be used to provide ship's service power, that generator must be considered a ship's service generator. The generator and switchboard regulations contained in 46 CFR Subparts 111.12 and 111.30 would then be applicable, as would the requirements for fault current analysis and (possibly) automatic load shedding. Dedicated industrial system generators, including containerized generator sets which are not tied to the main switchboard and have no provision to supply any ship's service loads, need, from an electrical standpoint, only meet the general safety criteria of the National Electrical Code and 46 CFR Subpart 111.107. Note that as discussed in 3.G.19.a, the emergency generator is not intended to be used as an "in port generator".

19. Emergency Lighting and Power Systems (46 CFR 112).

a. General. SOLAS II-1/42, 43, and 44 contain the requirements for emergency lighting and power systems, as does 46 CFR 112. These two sets of requirements (USCG and SOLAS), are generally in agreement. Vessels in some categories are permitted shorter periods of operation of the emergency power supply by 46 CFR Table 112.05-5(a) than by the SOLAS regulations; these vessels would not normally carry SOLAS certificates due to their size and/or limited operating routes. The Electrical Engineering Regulations permit manually connected emergency power sources only for cargo vessels less than 500 GT or cargo vessels of less than 1600 CT on other than ocean, Great Lakes, or coastwise routes and not on international voyages.

Diesel and gas turbine engines used as emergency generator prime movers must be capable of starting at an ambient temperature of 32 degrees F (0 degrees C). Electric water jacket heaters are permitted to ensure ready starting. Due to the impracticality of testing this capability in warm climates, the manufacturer's certification is generally accepted. A thermostatically controlled electric lubricating oil heater may be provided to reduce the accelerated wear, which may result from placing the generator load on a cold engine. Where detached electric motor-driven pumps are provided to circulate warm oil through the engine while it is stopped, a low oil level alarm should be installed to indicate any loss of oil through a leak in the pumps or external piping.

SOLAS 11-1/44.2 requires each emergency generating set to be equipped with a starting device with a stored energy capability for at least three starting attempts, with a second source for an additional three starts to be provided within 30 minutes unless manual starting (not just manual initiation of the start per 46 CFR 112.35-5) is practicable. This differs somewhat from the Electrical Engineering Regulations. The requirements for hydraulic, electric, and compressed

3.G.19. a. (cont'd) air starting Systems in 46 CFR 112.50 call for a capacity for at least six cranking cycles, with the capacity for three of these cranking cycles to be held in reserve until manually released.

The emergency generator is not intended to be used as an "in port generator"; it may be used to supply necessary electrical power to start the ship's machinery plant from a dead ship condition. When used in this manner, the emergency generator must be sized to provide power to all required emergency loads in addition to any loads on the emergency switchboard (not bus-tie loads) that are used for starting the ship's main propulsion machinery.

b. Location. SOLAS II-1/42.1.3 and 43.1.3 and 46 CFR 112.05-5(e) all state that the emergency generator room and a category A machinery space should not be adjoining, except where other arrangement is not practicable. Note that the CFR specifies the spaces will not be "adjoining", SOLAS requires not "contiguous", both indicating the spaces will not border each other horizontally or vertically. The intent is to maintain the integrity of the emergency electrical distribution system if there is a fire, flooding, or other casualty in the main machinery space. When the arrangement has been shown to be impractical, the installation of an A-60 bulkhead between the emergency generator room and the category A machinery space has been accepted.

It is recommended that the steel bulkhead be insulated to A-60 on both sides. Any contiguous boundary between the emergency generator room and any category A machinery space or space containing the main source of electrical power, associated transforming equipment, if any, and the main switchboard must be avoided.

c. Emergency Loads. The temporary and final emergency loads listed in 46 CFR Subpart 112.15 must be supplied by the emergency power source(s). Additional safety devices and systems (i.e., vital) may be connected to the emergency power system provided the emergency source is sized to supply these loads at 100% load factor. Additional loads which are intended to improve the safety or survivability of the vessel in certain operating modes (i.e., non-vital) and which have not been considered in sizing the emergency generator (such as the addition of a secondary deballasting system on a semisubmersible MODU) may be allowed to be connected to the emergency power supply when arranged to be functionally equivalent to a bus-tie - configuration. The following conditions would apply:

The non-vital loads must automatically trip off the emergency switchboard by means of an undervoltage or underfrequency trip or equivalent. When the normal power supply is lost; these loads must only be manually reconnected to the emergency bus, (this may be done remotely) and the non-vital loads must be shed automatically prior to overloading of the emergency generator. On a case-by-case basis, the emergency power system may be used to supply non-emergency circuits such as bilge pumps that are provided on Open-top Containerships to dewater cargo holds. These pumps are considered non-vital in the sense that with all the holds flooded, the ship is still seaworthy. With these additional non-emergency pump motor loads connected to the emergency bus, acceptable measures must be taken to safeguard independent emergency operation of vital loads under all

3.G.19. c. (cont'd) circumstances. Remote load monitoring and manual disconnection of required emergency loads is allowed, but automatic load shedding of the non-vital loads is necessary to maintain the integrity of the emergency power system.

Secondary Deballast Systems on MODUs may be electrically connected to the emergency switchboard via a transfer switch. This transfer switch may be an automatic bus transfer switch provided automatic load shedding is provided. Or manual if the emergency generator is sized to carry all the loads attached to the emergency bus. Upon shifting to emergency power, the Secondary Deballasting System must only start by manual initiation. This manual starting may be accomplished from the vessel control room.

None of the regulations in Subchapter J prohibit manually disconnecting required emergency loads at the operator's discretion. This may be accomplished via a remote start/stop switch located in the vessel control room.

Sizing of the Emergency Generators on Open-Top Containerships: Neither SOLAS consolidated edition 2001 nor ABS Rules require the emergency generator to be sized to supply the total connected load. Also, neither rule prohibit the connection to the emergency source of power, loads not specified in the requirements. SOLAS consolidated edition 2001, Chapter II-1, Regulation 43.2 and ABS rule 4-8-2/5.5 merely require the electrical power available to be sufficient to supply all those services that are essential for safety in an emergency with due regard given to those services that may be operated simultaneously. SOLAS consolidated edition 2001, Chapter II-1, Regulation 43.1.4 permits the emergency generator to be used to supply non-emergency circuits from the emergency switchboard "provided that suitable measures are taken for safeguarding independent emergency operation under all circumstances".

On an open-top containership conversion, the owner proposed to power the open-hold bilge pumps through manual transfer switches which would allow the pumps to be supplied from both the main and the emergency switchboards. There must also be an automatic means of disconnecting the pumps from the emergency switchboard when there is a failure of the main source of power.

Any bus-tie between a main switchboard and an emergency switchboard must not have automatic feedback of power from the emergency source to the main switchboard. When operating in a feedback mode, the bus-tie must open automatically upon overload before the emergency power source is tripped off line. Each bus-tie should be provided with short-circuit protection by a circuit breaker or fuses at both the main and the emergency switchboards.

Cables from the emergency switchboard, other than those which supply equipment in the machinery spaces, must not be run through the engineroom, boilerroom, or the casings of these spaces. Emergency power cables must not be run along decks or bulkheads that form the boundaries of these spaces. Again, the intent is to maintain the integrity of the emergency power system by protecting emergency power cables from thermal damage should there be a fire in the machinery spaces.

3.G.20. Communication and Alarm Systems.

a. Fire detecting And Alarm Systems. An automatic fire detecting and alarm system consists of a power supply, a control unit on which are located visible and audible fire and trouble signaling devices, and fire detector and alarm circuits, as required, originating from the control unit. Detector and alarm circuits consist of initiating and indicating devices and alarms. Initiating devices are smoke, heat or flame detectors and manual fire alarm boxes. Indicating devices are audible and visual alarm devices such as bells and strobe lights.

The Coast Guard approves systems on two separate levels. Fire detection system manufacturers obtain "Type-approval" of a system meeting the requirements of 46 CFR 161.002 from the Commandant (G-MSE-4). All of the components that compromise the system must be incorporated in the type approval submittal. Systems are approved for use on individual vessels by the Marine Safety Center based on compliance with the manufacturer's type system approval. Approved systems are required in designated areas of Passenger Vessels (46 CFR 76.05), Cargo and Miscellaneous Vessels (46 CFR 95.05), and in machinery spaces of inspected vessels where automated systems are provided to replace manual control and observation, such as minimally attended machinery spaces with centralized control rooms or unattended machinery spaces (46 CFR 62.50-20(c) and Table 62.35-50). Approved Systems are also required in cargo spaces intended for the carriage of dangerous goods per SOLAS 74, as amended, Regulation II-2/54. NVIC 7-80 "Use of Fire Detection Systems Which Are Not Approved under 161.002" must be consulted for guidance on systems for areas where detectors may be installed but are not required.

Listing by an U.S. Coast Guard recognized independent testing is not sufficient evidence of compliance with the type-approval requirements found in 46 CFR 161.002. Approval of systems designed for specific vessels may be obtained from Commanding Officer, Marine Safety Center, U.S. Coast Guard, 400 7th St. S.W, Room 6308, Washington, DC 20590-0001. Arrangements of the systems must be submitted in triplicate and all approved components should be readily identifiable. Only approved components should be used.

The requirements for location of equipment for all systems are found in 46 CFR 76.27 and 35. Additional requirements for vessels requiring SOLAS Certificates are found in SOLAS 74, as amended, Chapter II-2. Further guidance on locating detectors can be found in NFPA 72. Ventilation effects should be considered when locating detectors. 46 CFR 76.33 describes the allowable area to be monitored by an accumulator. Accumulator spacing may vary based on the fire detection system manufacturer's assurance that the spacing as proposed will provide adequate coverage of the spaces concerned.

b. General Alarm. A general alarm system meeting 46 CFR Subpart 113.25 must be provided on each manned vessel of over 100 gross tons, except barges, scows and similar vessels to alert the crew and passengers to the existence of an emergency situation and the need to report to their muster stations. Components of the general alarm system, including vibrating bells and flashing lights, do not require type approval by the Commandant. Only the system design and equipment installation need now be approved.

3.G.20 b. (cont'd) The general alarm must only be initiated manually and is intended to be sounded by the person on watch or other responsible member of the crew only after the determination has been made that an emergency situation exists which warrants mustering the crew and passengers (if any). SOLAS II-2 Regulation 13.1.4 permits the general alarm to be sounded automatically by a safety monitoring system, such as a fire detection and alarm system, if an initiating fire alarm is not acknowledged within a reasonable time (two minutes). This is permitted for spaces other than passenger spaces.

An integrated general alarm, fire alarm and public address system may be considered for equivalence to the intent of 46 CFR 113.25 and to satisfy SOLAS Chapter II-2, Regulation 40.5 for a public address system. Any such arrangement must give priority to the general alarm function. Such a system would function similarly to the multi-purpose 1MC Emergency Announcing System commonly used on naval vessels. Speakers and electronic tone generators may be used to produce a bell-like signal or tone distinct from any other audible signal on the vessel. The location of speakers and the generated sound level must meet 46 CFR 113.25-9. Either a distinct sound signal or intermittent operation of the general alarm bells (or speakers producing bell-like sounds) may be used to warn of fire. An integrated system must meet the following criteria:

(1) The fire alarm activating switch must be in a normally manned space, which can receive alarms from the master fire alarm panel and which has a general alarm contact maker.
(2) The general alarm signal must have priority over the fire alarm signal.
(3) The fire alarm switch should be marked "Fire Alarm" in red letters on a corrosion-resistant plate or sign.
(4) Operation of the fire alarm switch may also activate a fire alarm page via the public address system. This must not interfere with the normal operation of the general alarm.
(5) If the fire alarm signal is generated external to the general alarm system, loss of power to it must not affect the general alarm system.
(6) The fire alarm signal must be distinct from those signals required by 46 CFR 109.503 for MODUs.

The emergency signals required by 46 CFR 109.503 for Mobile Offshore Drilling Units differ considerably from those used on other types of vessels. The intent of this was to recognize and standardize existing industry practice that was different than for vessels.

This promotes consistency among offshore rigs, both mobile and fixed, so that an offshore oil worker can recognize the same sound signal and respond in the proper manner to similar emergency situations on either kind of installation. The emergency signals specified in 46 CFR 109.503 should be used for "emergency stations" and "abandon unit" situations only.

c. MODU'S. Other signals, such as fire warnings, must be distinct from these required signals. Vessels have been allowed, on a case-by-case basis, more than one general alarm contact maker in addition to those required under 46 CFR 113.25-5(a), (b), or (c) where justification was presented. Additional contact makers may be permitted where their

3.G.20 c. (cont'd) installation results in an increase in vessel safety. Any additional contact makers should meet the construction requirements of 46 CFR 113.25-11 and should be labeled per 113.25-20(b). Contact makers in weather locations should be provided with suitable weatherproof enclosures. Where jack boxes are used for these additional contact makers, there must be cut-out switches in the wheelhouse that can isolate the jack boxes from the rest of the general alarm system.

There are no switches available which satisfy the requirements of both 113.25-11 for contact makers and 111.105 for electrical equipment in hazardous areas. For contact makers that must be in hazardous locations, the requirements of 111.105 apply. These switches should be labeled as required for contact makers by 113.25-20(b) and 113.25-11(d), as applicable.

Flashing red lights which augment the general alarm bells must be supplied by the general alarm system power supply, except for flashing red lights in the main machinery space supplied from the emergency source of power through relays operated by the general alarm system. In general, the use of the emergency source of power for all general alarm system flashing red lights meets the intent of 113.25-10(c).

d. Alarm Signals. The minimum sound pressure levels for the emergency alarm tone in interior and exterior spaces must be a sound level of not less than 80dB(A) measured at 10 feet on the axis; and at least 10dB(A) measured at 10 feet on the axis, above the background noise level when the vessel is underway in moderate weather unless flashing red lights are utilized in accordance with 113.25-10(b) of this subpart. Alarm signals intended for use in sleeping compartments may have a minimum sound level of 75dB(A) measured 3 feet (1m) on axis and at least 10dB(A) measured 3 feet (1m) on axis, above ambient noise levels with the ship underway in moderate weather.

e. Sound Powered Telephones. Section 37.22 of IEEE Standard 45 and military specification MIL-T-15514 may be used as guidance for construction, installation, and performance standards for sound-powered phones.

Sound-powered telephone headsets and jack boxes are not permitted on any telephone system that includes any station required by the regulations, except for use at engineroom local control stations; see 46 CFR 113.30-20(c). The objections to the use of these portable headsets are:

(1) Headsets are often not there when needed.
(2) Headsets have been more prone to damage than fixed handsets.
(3) Headsets introduce noise on the circuit because the earphone is always on and acts as a microphone.
(4) Jack boxes frequently corrode and short the circuit contacts, causing unreliable circuit operation.

A hard-wired (no jack) headset with a push-to-talk button, a watertight storage/connection box, and a cut-out switch can overcome these objections and may be accepted for use in locations with high background noise~levels, such as steering gear rooms.

3.G.20. f. Engine Order Telegraph (EOT, 46 CFR 113.35). The engine order telegraph is a communication system that is necessary under temporary emergency conditions. Where an electric EOT is installed, 46 CFR 112.15-1(h) is applicable. Electric EOT systems must either be provided with an independent storage battery source of backup power or be arranged so that they can be energized from the temporary emergency power source. 46 CFR 113.35-5 also contains additional requirements for an electric EOT.

46 CFR 113.35 requires the EOT transmitter in the wheelhouse to have a "handle." The intent is to provide for rapid visual determination of engine order from throughout the wheelhouse, and if necessary, a determination by feel. This intent should be met by an EOT considered a secondary or standby device, as well as an EOT used as a primary control device. In most instances, this precludes consideration of a flush mounted, knob-type transmitter as an equivalent arrangement. Transmitters that provide rapid visual and tactile determination of orders, such as some push-button type transmitters, may be evaluated for equivalency.

g. Emergency Loudspeaker Systems. Subpart 113.50 of the Electrical Engineering Regulations requires an emergency loudspeaker system on each ocean and coastwise passenger vessel certificated to carry 500 or more persons, including officers and crew, and each passenger vessel that has lifeboats stowed more than 100 feet (30.5 meters) from the navigating bridge. The system permits two-way conversation between the navigating bridge and each lifeboat or embarkation station. SOLAS Chapter III, Regulation 6.4.1 requires an emergency means of two-way communication between emergency control stations, muster and embarkation stations, and strategic positions on board as part of the lifesaving arrangements for both passenger and cargo ships.

A combined public address, music distribution, and emergency loudspeaker system may be used for the system required by 113.50, provided the emergency loudspeaker function is given priority. If a separate public address or music system is used, a means to silence that system must be provided at the emergency loudspeaker system control panel.

H. Novel Vessel Design.

1. High Speed Craft. Rapidly occurring changes in technology often require the adaptation of existing requirements to new situations. Dynamically supported craft such as hydrofoils, surface effect ships, and air cushion vehicles are unique vessel designs that likely will require research and evaluation on an individual basis. The Marine Safety Center leads the concept review of novel designs and will determine what guidance to apply. Modern vessels operating over a 30 knot threshold will likely be classified as a high speed craft, particularly if they are engaged in passenger service. Coast Guard guidance for domestic high-speed craft can be found in: “Guidance for Enhancing the Operational Safety of Domestic High-Speed Vessels”, COMDTPUB P16700.4, NVIC 5-01. Coast Guard guidance for vessels built to international standards can be found in: “Plan Review, Inspection, And Certification Guidance For Vessels Built To The International Code Of Safety For High-Speed Craft And Additional Information Regarding Non-Code High-Speed Vessels”, COMDTPUB P16700.4, NVIC 6-99.

3.H.2 Deep Water Ports (DWP's).

a. Introduction. The Federal Register Volume 69, dated 06 January 2004, page 724, institutes a Temporary Interim Rule for Deep Water Ports. The Federal Register is available online at: http://www.gpoaccess.gov/fr/index.html . For general information on offshore platform regulations see Volume II, Section B, Chapter 8, of this manual. The involvement and responsibilities of Commandant (G-MSE-3) with DWP's has primarily been to provide electrical technical assistance. This assistance was needed as a result of 33 CFR 149.205(c), which states that "each electrical installation on a platform must be designed, to the extent practicable, in accordance with 46 CFR 110-113." Commandant (G-MSE-3) became increasingly involved with the DWP project upon issuance of Final Deepwater Ports Regulations, Subchapter RN, on 10 November 1975. Since the Electrical Engineering Regulations (Subchapter J) are referenced therein, interpretations of their requirements (e.g., "to the extent practicable") were necessary. The "exemption petition" procedures were established by the DWP project, and many of these were considered and acted upon by the branch's electrical staff. Interpretations regarding the application of Coast Guard Shipboard Electrical Regulations to the fixed structure of a deepwater port were made each time an "exemption petition" was considered.

b. Loop Project. The most involved "exemption petition" concerned a request from the Louisiana Offshore Oil Port (LOOP) for relief from the use of Subchapter J for classification of hazardous areas. LOOP proposed to use the American Petroleum Institute's (API's) recommended practice (API RP 500B), strengthened by the other rules of typical industry practice. The focal point of the difference is that Coast Guard regulations assume hazardous concentrations of flammable vapors to exist periodically in the vicinity of cargo pipe flanges, pumps, and valves because of leakage. This assumption renders the spheres within 10 feet of these fittings as Class 1, Division 1, while "the industry standard" assumes the vapors will be contained in the cargo piping, escaping only in case of abnormal operation at breakdown (Class 1, Division 2). After several appeals, the decision to enforce the Coast Guard regulations was made. Significant exemptions that have been granted to LOOP are as follows:

(1) UL 57 electrical lighting fixtures (industrial standard) have been allowed for installation inside the control building in lieu of UL 595 marine fixtures;

(2) Cable requirements have been relaxed where conduit systems are used, provided certain criteria are met;

(3) Silicon dielectric-type transformers have been allowed for certain applications if dry-type transformers are not available;

(4) Ship motion and other strictly shipboard-related requirements have been deleted where judged inappropriate or not practicable;

Special requirements have been set for the higher voltage systems used on the deepwater port.

MARINE SAFETY MANUAL

CHAPTER 4. CONSIDERATIONS FOR SURVIVAL SYSTEMS

CONTENTS

SECTION		PAGE
4.A.	Introduction	4-1
4.B.	Functions Of The Survival Systems Branch	4-1
4.B.1.	"In-House" Functions	4-1
4.B.2.	External Activities	4-1
4.C.	Areas Of Branch Interest	4-2
4.C.1.	General Equipment Approvals	4-2
4.C.2.	Approvals Based Upon Unpublished Specifications	4-2
4.C.3.	Approvals Of Recently Developed Equipment	4-2
4.D.	Sources Of Information	4-2
4.D.1.	Equipment Lists, Commandant Instruction (COMDTINST) M16714.3	4-2
4.D.2.	Approval Record Cards	4-2
4.D.3.	Navigation And Vessel Inspection Circulars (NVIC's)	4-2
4.D.4.	Marine Safety Manual (MSM)	4-3
4.D.5	"Distribution Letters"	4-3
4.D.6.	Policy-Related Correspondence	4-3
4.E.	Specific Branch Activities	4-3
4.E.1.	Design And Plan Review Activities	4-3
4.E.2.	Lifesaving Systems	4-3
4.E.3.	Control Assumptions	4-4
4.E.3.a.	General	4-4
4.E.3.b.	For Passenger Vessels	4-4
4.E.4.	Human/Mechanical Factor	4-4
4.E.4.a.	General	4-4
4.E.4.b.	Consideration Of Special Cases	4-4
4.F.	Review Of Lifesaving Equipment Installations And Designs	4-4
4.F.1.	Authority	4-4
4.F.2.	General Care In Review	4-5
4.F.3.	Identification Of Primary Equipment	4-5
4.F.3.a.	Regulatory Citations	4-5
4.F.3.b.	Plans For Boat Deck Arrangement	4-5
4.F.3.c.	Lifesaving Equipment	4-6
4.F.3.d.	Workboats And Associated Equipment	4-6
4.F.3.e.	Personal Flotation Devices (PFD's)	4-6
4.F.4.	Required Lifeboat Winches	4-7
4.F.4.a.	Regulatory Citations	4-7
4.F.4.b.	Lifeboat Winches	4-7
4.F.5.	Location Of Lifeboat Winches	4-7
4.F.5.a.	Regulatory Citations	4-7
4.F.5.b.	Acceptable Configurations	4-7
4.F.6.	Anticorrosion Precautions	4-10

CONTENTS

SECTION		PAGE
4.F.7.	Launching Gear Foundation Drainage	4-10
4.F.8.	Strength Criteria For Launching Gear	4-10
4.F.8.a.	Regulatory Citations	4-10
4.F.8.b.	Designed Safety Factors	4-10
4.F.8.b.(1)	In Structural Installations	4-10
4.F.8.b.(2)	In Fittings	4-11
4.F.8.b.(3)	For Lifeboat Davits Aboard Liquefied Natural Gas (LNG) Carriers	4-11
4.F.9.	Lifeboat Falls	4-11
4.F.9.a.	Regulatory Citations	4-11
4.F.9.b.	Breaking Strength Of Wire Ropes	4-12
4.F.9.c.	Breaking Strength Calculations	4-12
4.F.9.c.(1)	General	4-12
4.F.9.c.(2)	Calculation Requirements	4-12
4.F.10.	Location Of Lifeboats Relative To Propeller(s)	4-14
4.F.10.a.	Regulatory Citations	4-14
4.F.10.b.	General Requirements	4-14
4.F.11.	Access To Stowed Lifeboats	4-14
4.F.11.a.	Regulatory Citations	4-14
4.F.11.b.	Lifeboats Retained On Gravity Davits	4-14
4.F.12.	Lifeboat Davit Tricing Pendants And Frapping Lines	4-14
4.F.12.a.	Regulatory Citations	4-14
4.F.12.b.	General Requirements	4-16
4.F.13.	Davit Span Wires/Lifelines	4-16
4.F.13.a.	Regulatory Citations	4-16
4.F.13.b.	General Requirements	4-16
4.F.14.	Lifeboat Skates And Skid Stanchions	4-16
4.F.14.a.	Regulatory Citations	4-16
4.F.14.b.	General Requirements	4-18
4.F.15.	Overboard Discharge Openings	4-18
4.F.15.a.	Regulatory Citations	4-18
4.F.15.b.	General Requirements	4-18
4.F.16.	Embarkation Ladders For Lifeboats/Life Rafts	4-18
4.F.16.a.	Regulatory Citations	4-18
4.F.16.b.	General Requirements	4-18
4.F.16.c.	Exceptions	4-20
4.F.17.	Pilot Ladders	4-20
4.F.17.a.	Regulatory Citations	4-20
4.F.17.b.	General Requirements	4-20
4.F.17.c.	Requirements Under SOLAS	4-20
4.F.17.d.	Alternate Arrangements	4-21
4.F.18.	Deck Cover Guards For Lifeboat Falls	4-21
4.F.18.a.	Regulatory Citations	4-21
4.F.18.b.	General Requirements	4-24
4.F.19.	Guards In Dangerous Places	4-24
4.F.19.a.	Regulatory Citations	4-24
4.F.19.b.	General Requirements	4-24
4.F.20.	Illumination Of Lifeboat Stowage Areas	4-24

CONTENTS

SECTION		PAGE
4.F.20.a.	Regulatory Citations	4-24
4.F.20.b.	General Requirements	4-24
4.F.21.	Stowage Of Inflatable Life Rafts	4-24
4.F.21.a.	Regulatory Citations	4-24
4.F.21.b.	General Requirements	4-26
4.G.	Pollution Abatement Measures	4-26
4.G.1.	Marine Sanitation Devices (HSD's)	4-26
4.G.1.a.	Introduction	4-26
4.G.1.b.	Testing And Inspection	4-27
4.G.2.	Listings	4-27
4.G.3.	Use Of Chemicals	4-27
4.G.3.a.	Introduction	4-27
4.G.3.b.	Disposal Procedures	4-28
4.G.4.	Gas Generation	4-28
4.G.5.	Oil Pollution Abatement Devices	4-28
4.G.5.a.	Introduction	4-28
4.G.5.b.	Approval Testing	4-28
4.G.5.c.	Equipment Types	4-29
4.G.5.d.	Requirements For Oily-Water Separators	4-29
4.H.	Fire Protection Systems	4-29
4.H.1.	Approval Of Structural Materials	4-29
4.H.1.a.	Introduction	4-29
4.H.1.b.	Deck Coverings	4-30
4.H.1.c.	Non-Combustible Materials	4-30
4.H.1.d.	Structural Insulation	4-30
4.H.1.e.	Bulkhead Panels	4-30
4.H.1.f.	Interior Finishes	4-31
4.H.2.	Materials Testing	4-31
4.H.2.a.	In The U.S.	4-31
4.H.2.b.	Foreign Testing	4-31
4.I.	Approval Of Equipment And Systems	4-31
4.I.1.	Portable Fire Extinguishers	4-31
4.I.2.	Semi-Portable Extinguishers	4-33
4.I.3.	Fixed Extinguishing Systems	4-33
4.I.3.a.	Introduction	4-33
4.I.3.b.	Approval Of Fixed Water Spray Systems	4-33
4.I.3.c.	Approval Of Carbon Dioxide Systems	4-33
4.I.3.d.	Approval Of Halon 1301 Systems	4-33
4.I.3.e.	Approval Of Foam Systems	4-33
4.I.4.	Combination Fire Hose Nozzles	4-34
4.I.5.	Respiratory Protective Equipment	4-34
4.I.6.	Flame Safety Lamps	4-34

CHAPTER 4. CONSIDERATIONS FOR SURVIVAL SYSTEMS

A. Introduction. The functions of the Survival Systems Branch, Commandant (G-MVI-3), stem from various duties imposed upon the Commandant by federal statutes relating to the safety of life and property on the high seas and on the waters subject to the jurisdiction of the United States.

B. Functions Of The Survival Systems Branch.

1. "In-House" Functions. Under the direction of the Chief, Merchant Vessel Inspection Division (G-MVI), the Survival Systems Branch administers the federal approval program for marine lifesaving, firefighting, and pollution abatement equipment and systems, through the following activities:

   a. Development of regulations, policy decisions, and standards for equipment and systems;

   b. Analysis of manufacturers' designs for compliance with regulations;

   c. Provision of information and instructions to Coast Guard field personnel, naval architects, shipbuilders, vessel operators, recognized inspection/testing organizations, and manufacturers;

   d. Conferences with representatives of other agencies dealing with these subjects, such as the American Bureau of Shipping (ABS), the Environmental Protection Agency (EFA), the National Fire Protection Association (NFPA), the National Bureau of Standards, the National Cargo Bureau, Inc. (NCB), and state law enforcement agencies;

   e. Recommendations and conduct of research and development projects in these subjects;

   f. Familiarity with current technical trends and industrial developments, by participation in technical society committees and review of casualty data and failure reports;

   g. Maintenance of a uniform policy for the approval of vessel lifesaving, fire protection, and pollution abatement equipment arrangements and materials at the Marine Safety Center (MSC) and the field inspection offices; and

   h. Conduct of a compliance program through Coast Guard marine inspection units and civilian inspection/testing services recognized by the Commandant, to ensure that items approved for production comply with the standards under which they were approved.

2. External Activities. The Survival Systems Branch represents the U.S. at meetings of the International Maritime Organization (IMO) concerning technical and policy issues bearing upon maritime safety and pollution

4.B.2. (cont'd) abatement. The branch also provides policy, technical support, and administration of federal approval programs in support of the Offices of Marine Environment and Systems (G-W) and Boating, Public and Consumer Affairs (G-B), other Headquarters staffs, and field units in areas related to lifesaving, fire protection, and pollution abatement.

C. Areas Of Branch Interest.

1. General Equipment Approvals. The Survival Systems Branch approves the following types of equipment based upon regulations in 46 CFR, Subchapter Q (Specifications), which are reprinted each October:

   a. Primary lifesaving equipment and related major items;

   b. Personal flotation devices (PFD's) and related materials;

   c. Pyrotechnic signals and line-throwing appliances;

   d. Firefighting, emergency breathing, and structural fire protection items;

   e. Marine sanitation/pollution abatement systems; and

   f. Miscellaneous life safety-related items.

2. Approvals Based Upon Unpublished Specifications. Approvals have also been given for some items based on unpublished specifications that date from World War II. These involve sea anchors, lifeboat compasses, and signal mirrors.

3. Approvals Of Recently Developed Equipment. A third area of approval concerns recently developed items, specifications for which await publication in the Federal Register. The branch maintains a supply of reprints of the various specifications for distribution to manufacturers and other interested parties.

D. Sources Of Information.

1. Equipment Lists, Commandant Instruction (COMDTINST) M16714.3. This publication lists approved items by groups derived from Subchapter Q (e.g., No. 160.051/2/0 identifies a particular model of inflatable life raft). Equipment Lists further identifies each device by manufacturer, type or model designation, and assigned approval number.

2. Approval Record Cards. Each marine inspection unit receives card copies of approval certificates (Form CGHQ-10030), which provide basic information about each approved item.

3. Navigation And Vessel Inspection Circulars (NVIC's). NVIC's explain and interpret the requirements of the equipment specifications and vessel regulations. An NVIC most frequently deals with the particulars of some problem affecting shipboard use of equipment.

4.D.4. Marine Safety Manual (MSS). The MSM is revised periodically to permit timely changes to inspection and technical policies and procedures for Coast Guard personnel. It is available to public subscribers through the Government Printing Office (GPO) (see volume I of this manual).

5. "Distribution Letters." These are letters to manufacturers on product data, approval details, or procedures related to the products they manufacture. They serve as a speedy means of disseminating information without writing separate letters to individuals.

6. Policy-Related Correspondence. Occasionally, decisions made by the branch relating to the unusual circumstances of an individual case will have widespread and lasting consequences. After such decisions are made part of the branch's working policy, they are incorporated in the regulations, the MSM, or an appropriate NVIC.

E. Specific Branch Activities.

1. Design And Plan Review Activities. The Survival Systems Branch provides the initial review of drawings related to lifesaving, firefighting, and pollution abatement items submitted for approval. This activity permits the MSC to concentrate its effort on plan review for vessels under construction. Unusual survival and environmental protection systems, proposed as "equivalents" under 46 CFR 90.15, etc., and safety equipment not specified under Subchapter Q are also reviewed by the branch for approval. A guide for lifesaving plan review is included in section 4.F below to maintain a uniform interpretation of the vessel regulations applicable to lifesaving equipment.

2. Lifesaving Systems. Analyses of vessel abandonment problems have given rise to a "philosophy" of the function of lifesaving systems. Briefly, this philosophy is that:

a. There should be a place in a survival craft for every person on the vessel under all anticipated casualty scenarios;

b. Abandonment should be possible in a minimum amount of time, using procedures that are as simple and efficient as possible;

c. The survival craft should provide the means for its complement to survive under expected conditions until rescue;

d. The vessel and its survival craft both should have effective means of alerting rescuers to a casualty and to the location of survivors;

e. The survival craft should be arranged in such a manner as not to hamper recovery of the craft or survivors by ship or aircraft;

f. The vessel should have the means for recovery of persons in the water and for coming to the aid of other vessels in distress; and

g. Effective training on and maintenance of such equipment is vital.

4.E.3. Control Assumptions.

a. General. The International Convention for Safety of Life at Sea (SOLAS) requirements and U.S. regulations translate this philosophy into specific requirements, based on certain assumptions made about typical vessels of various types. For example, the first factor is met by having a combined capacity of survival craft on each side of the vessel adequate to accommodate all persons aboard; if the craft on one side of the vessel are inaccessible due to damage or excessive listing, those on the other side will be sufficient. Life rafts arranged to float free from a sinking vessel and inflate automatically are provided as secondary equipment, so that survival craft are at hand should the vessel sink so rapidly that lifeboats cannot be launched.

b. For Passenger Vessels. Such vessels are required to meet certain standards of subdivision intended to prevent sinking so rapid that lifeboats cannot be launched. Therefore, the "primary" lifesaving gear on a passenger vessel includes sufficient lifeboats (and, in some cases, davit-launched life rafts) to accommodate everyone aboard. These are distributed on both sides of the vessel, and additional life rafts sufficient to accommodate 25 percent of the total persons aboard are provided in the event the primary equipment is damaged or otherwise unusable.

4. Human/Mechanical Factor.

a. General. Equipment encompasses only one half of the survival philosophy; the other entails the human factor. The crew must be properly trained to carry out their duties in case abandonment or another shipboard emergency endangers the vessel. Effective training cannot be limited to a "routine" fire and boat drill. Crewmembers must know what to do in various situations, how to respond when shipmates are killed or injured, what to do should the casualty make it impossible to fulfill the duties outlined in the station bill, and how to use survival and emergency equipment. Posters and written instructions should be clear and accurate. This means that a standard form may not be appropriate in every case.

b. Consideration Of Special Cases. Generally, the regulations result in lifesaving arrangements that are appropriate for the vessel. However, special cases may arise that were not envisioned by the regulations. Required equipment may not be available to the vessel or may be inappropriate, or special training measures may be necessary so that crewmembers can react appropriately to emergency conditions.

F. Review Of Lifesaving Equipment Installations And Designs.

1. Authority. The general authority for Coast Guard review of a vessel's lifesaving equipment drawings to verify compliance with regulatory requirements is contained in the following regulations:

4.F.1. a. Tankers: 46 CFR 31.01-5(a), 31.10-5(a) and Part 33;

b. Passenger Vessels: 46 CFR 71.65-5(g) and Part 75,

c. Cargo and Miscellaneous Vessels: 46 CFR 91.55-5(g) and Part 94;

d. Small Passenger Vessels: 46 CFR 177.05 and Part 180 (if drawings are required); and

e. Oceanographic Research Vessels: 46 CFR 189.55-5(g) and Part 192.

2. General Care In Review. With the exception of 46 CFR 35.01-20 requirements for tankers, installations of pilot ladders need not be shown on drawings submitted for review. When these installations are not shown, however, problems can result (see paragraph 4.F.17 below). In light of the increased emphasis on pilot ladders resulting from the 1974 SOLAS Convention, reviewing officers should ensure that features of the vessel's design do not preclude proper fitting and use of pilot boarding gear (e.g., decks that project past the skin of the vessel and outward-opening doors for boarding ports at a height that endangers pilot craft coming alongside). In some instances, lifeboat and life raft installation drawings may not be incorporated on the same sheet. Care must be taken by the reviewer to ensure that the design location of life raft stowage areas does not impede the launching of lifeboats.

3. Identification Of Primary Equipment.

a. Regulatory Citations.

(1)	Tankers	46 CFR 33.01 and 33.05
(2)	Passenger Vessels	46 CFR 75.05 and 75.10
(3)	Cargo/Miscellaneous Vessels	46 CFR 94.05 and 94.10
(4)	Small Passenger Vessels	46 CFR 180.05 and 180.10
(5)	Oceanographic Research Vessels	46 CFR 192.05 and 192.10

b. Plans For Boat Deck Arrangement. The vessel's boat deck arrangement drawing shall identify each item of primary lifesaving equipment by its approval number, manufacturer, capacity rating in number of persons, and principal dimensions as indicated in Equipment Lists. The "List of Materials" on the drawing is the logical place to include identification data, but notations made elsewhere on the drawing are acceptable. "Certificate of Approval" cards (Form CGHQ-10030) on file at the MSC provide additional data to that given in Equipment Lists. Aboard passenger vessels, one of the boats on each side shall be the "leadoff" or emergency lifeboat and shall be checked against its approval card as being suitable for this purpose (see 46 CFR 75.10 10(a)(3)). For tankers, passenger ships, cargo and miscellaneous vessels, and oceanographic research vessels (ORV's)

4.F.3. b. (cont'd) (see 46 CFR 33.01-30(g), 75.10-5(e), 94.10-5(e), and 192.10-5(e), respectively), the suitability of a rescue boat is determined by the officer in charge, marine inspection (OCMI). Therefore, in such matters the MSC shall coordinate its activities with the OCMI.

c. Lifesaving Equipment. The following primary lifesaving equipment, including their types and locations, shall be identified (see 46 CFR 33, 75, 94, and 192): lifeboats, lifeboat davits/winches, rigid and inflatable life rafts, lifefloats, other buoyant apparatus, embarkation ladders, and rescue boats. The term "lifeboat" includes open and totally enclosed lifeboats and survival capsules. The following should be considered during plan review, as well as specific details:

(1) Type of vessel;

(2) Intended use;

(3) Sufficiency of lifeboats and their capacities;

(4) Sufficiency of davits and their capacities;

(5) Sufficiency of winches and their capacities;

(6) Sufficiency of life rafts and their capacities; and

(7) Approval of this equipment.

d. Workboats And Associated Equipment. Workboats and their launching gear are not considered part of an oceanographic research vessel's lifesaving equipment. However, to ensure structurally safe installation of these items, the OCMI should require the tests provided in 46 CFR 189.35 that are judged relevant to be performed. These tests will verify the soundness of such items as falls, hooks, and attachment fittings. After the OCMI is satisfied with the installation of the workboat, a noncorroding plate shall be affixed to the launching equipment for record purposes. The plate shall be stamped with the working load (in pounds), the unit identification, the letters "USCG," and the date.

e. Personal Flotation Devices (PFD's). As stated in 46 CFR 180.10-.1(b), PFD's are not primary lifesaving equipment aboard a "T-boat." However, the locations of their stowage shall be considered in plan review, in accordance with policy set by the Commandant following a capsizing incident in 1977 with loss of life (see "M/V DIXIE LEE II, COMDT(G-MMI-1) Casualty File CV-73387; Action by the Commandant," dtd 15 Aug 78). The term "life preserver" may be used interchangeably with the terms "personal flotation device" and "PFD."

4.F.4. Required Lifeboat Winches.

a. Regulatory Citations.

(1)	Tankers	46 CFR 33.10-5, -10(b)
(2)	Passenger Vessels	46 CFR 75.30-5, -10
(3)	Cargo/Miscellaneous Vessels	46 CFR 94.30-5, -10
(4)	Oceanographic Research Vessels	46 CFR 192.30-5, -10

b. Lifeboat Winches. These are required:

(1) With all gravity davits (which are required for launching lifeboats whose weight exceeds 5,000 pounds when fully equipped, without passengers); and

(2) With a lifeboat davit of any type installed on a deck, the height of which exceeds 20 feet above the lightest seagoing draft.

When lifeboat winches are installed, wire rope falls are required. Figure 4-1 shows how the requirements of 46 CFR 160.015-2(b) differ for the wire rope drums of winches installed with gravity and mechanical davits. A winch used with a mechanical davit has nongrooved drums, in contrast to the grooved drums required with gravity davit winches. Lead sheaves to drums shall be located to provide fleet angles of not more than 8' for grooved drums and not more than 4' for nongrooved drums. [NOTE: The fleet angle is the angle between an imaginary line from the lead shears perpendicular to the axis of the drum and the line formed by the wire rope led from the lead shears to either extremity of the drum.] Fleet angles exceeding 8' reduce the service of the wire rope, which will mash and jam from its uneven overwinding and pile up on the drum.

5. Location Of Lifeboat Winches.

a. Regulatory Citations.

(1)	Tankers	46 CFR 33.10-5(e), -10(j)
(2)	Passenger Vessels	46 CFR 75.30-15(a)
(3)	Cargo/Miscellaneous Vessels	46 CFR 94.30-15(a)
(4)	Oceanographic Research Vessels	46 CFR 192.30-15(a)

b. Acceptable Configurations. Figure 4-2 indicates the acceptable distance between the side of a vessel and the end of the brake lever handle of a lifeboat winch.

FIGURE 4-1

WINCH DRUMS AND FLEET ANGLES

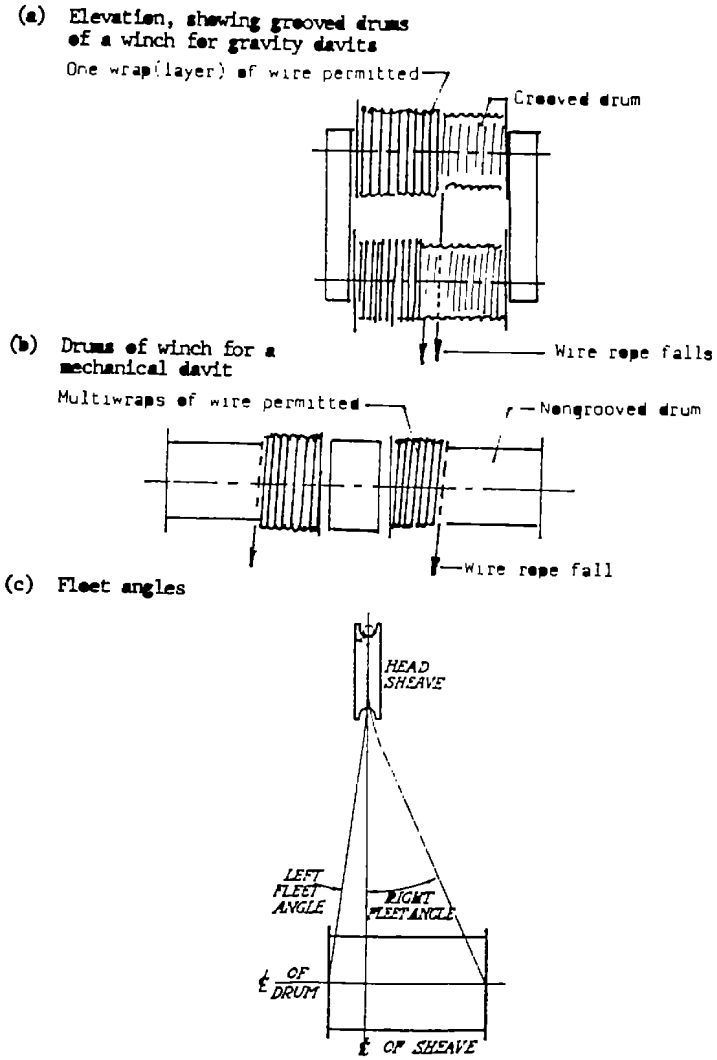

FIGURE 4-1
MARINE SAFETY MANUAL

FIGURE 4-2
LOCATION OF LIFEBOAT WINCHES

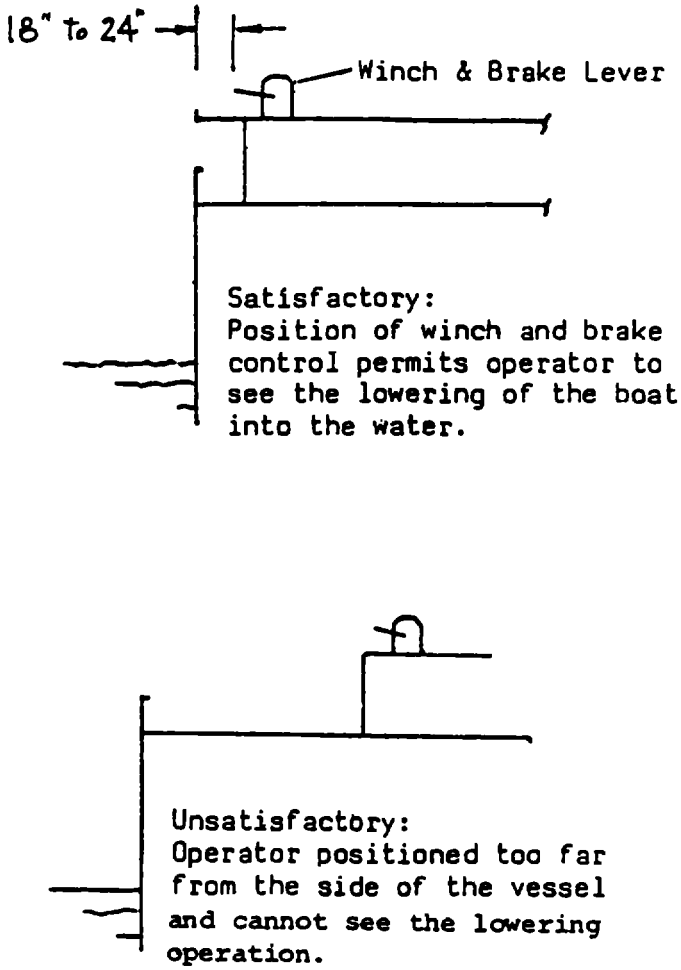

4.F.6. Anticorrosion Precautions. Military Specification MIL-E-16400 (Navy), Electronic Equipment, Naval Ship and Shore - General Specification, provides guidance for resolving problems of salt water corrosion and galvanic corrosion of dissimilar metals. Special precautions are necessary to prevent galvanic corrosion betweens vessel and its davits and winches wherever dissimilar metals are employed. Because certain aluminum davits and winches have been approved, the vessel's lifesaving equipment drawings shall indicate which of these units (if any) are made of aluminum. This information is included on the Certificate of Approval cards. It is referred to in the use of stainless steel foundation bolts, washers, and nuts in conjunction with micarta or fibrous glass reinforced plastic shims and gaskets to prevent galvanic corrosion. The steel fittings and steel wire rope for the gripes of an aluminum lifeboat shall be sheathed in plastic or other organic material to prevent galvanic corrosion.

7. Launching Gear Foundation Drainage. The details on the drawing for the foundations of davits and winches shall indicate drain holes to prevent the accumulation of water.

8. Strength Criteria For Launching Gear.

a. Regulatory Citations.

(1)	Tankers	46 CFR 33.10-10(a)
(2)	Passenger Vessels	46 CFR 75.33-5(a)
(3)	Cargo/Miscellaneous Vessels	46 CFR 94.33-5(a)
(4)	Oceanographic Research Vessels	46 CFR 192.33-5(a)

b. Designed Safety Factors. A safety factor of 6.0, calculated by the maximum allowable working load and ultimate strength of the material, is specified in these regulations for the hardware and equipment used for launching a lifeboat. These criteria are provided for during the design and manufacture of the equipment. However, the strength of the installation of the lifesaving equipment to the vessel must be reviewed to ensure that the same level of safety is maintained.

(1) In Structural Installations. Foundations and stiffening under and adjacent to lifesaving equipment are necessary so that loads produced by the equipment are not imposed too abruptly on the vessel's structure. The foundation and reinforcement of the decks and bulkheads in way of the davit and winch are functionally part of the launching system. As such, the requirement for a factor of safety of 6.0 on the ultimate strength of the material should carry through to the ship structure supporting the equipment. That is, the weight of the equipment on the ship plus the loads imposed by launching the lifeboat at any angle of heel ranging between 15' high side and 15' low side should not result in stresses exceeding one-sixth of the ultimate strength of the material. Normally, this is not a

4.F.8.b. (1) (cont'd) problem as equipment foundations and the adjacent ship structure tend to be amply designed for this purpose. Nevertheless, the designer should produce calculations to show that the launching loads have been analyzed thus and found acceptable. Reaction loads and moments for the critical connection points of the equipment can be obtained from the davit/winch manufacturer.

(2) In Fittings. The safety factor of 6.0 shall be applied to the design of all fittings from which persons may be suspended, such as padeyes for attaching embarkation ladders and workboat falls, etc., that are not covered by specific regulations. The strength data given in manufacturers' catalogues will be satisfactory for safety calculations of falls, shackles, turnbuckles, etc.

(3) For Lifeboat Davits Aboard Liquefied Natural Gas (LNG) Carriers. The lifeboat davits for LNG vessels, while required by 46 CFR 154.1445 to be operable on the low side at a final angle of heel exceeding that specified by SOLAS, do not involve equipment of extra strength, special construction, or special approval. With the exception of their tricing pendants, LNG vessel davits are identical to those approved under 46 CFR 160.032. To meet the requirements of 154.1445, for a greater angle of heel the normal tricing pendants are shortened, relocated, and installed in conjunction with two-part frapping tackles to bring the lifeboat back to the embarkation deck. The review of lifeboat davits for LNG vessel installations shall ensure compliance with two fundamental requirements:

(a) First, it must be established that the lifeboat can be safely launched despite possible obstructions posed by an increased angle of heel, the submergence of the vessel's gunwale, or any features peculiar to a particular vessel.

(b) If the lifeboat is provided a clear path to the water, the second requirement involves a comparison of the stresses caused by the increased heel with those of the proportional limit of the material used in the davit. If the davit maintains a level of stress that is less than the proportional limit, the reduced factor of safety is acceptable and davits approved under 46 CFR 160.032 may be employed. Under this condition, the unusual tricing/frapping arrangement discussed previously shall be included.

9. Lifeboat Falls.

a. Regulatory Citations.

(1)	Tankers	46 CFR 33.10-10
(2)	Passenger Vessels	46 CFR 75.33-5, -10, -15

4.F.9.a. (3) Cargo/Miscellaneous Vessels 46 CFR 94.33-5, -10, -15

(4) Oceanographic Research Vessels 46 CFR 192.33-5, -10 -15

b. Breaking Strength Of Wire Ropes. Data for determining breaking strength of the wire ropes most commonly used for lifeboat falls is available in the following publications:

(1) Federal Specification RR-W00410 (Navy-Ships), Wire Rope and Strand;

(2) Military Specification MIL-W-24228 (Ships), Wire Rope, Aluminized; and

(3) Catalogues of wire rope manufacturers.

c. Breaking Strength Calculations.

(1) General. Under 46 CFR 160.032-3(a), a lifeboat must be lowered safely with its full complement of persons and equipment. Accordingly, the strength of a davit is calculated on the basis of the lowering of the boat. As shown in Figure 4-3, the davit moves from its stowed position to the embarkation deck, where its descent is interrupted by a stopper bar. During the lowering process, the falls support the weight of the boat, its equipment, and its rated complement (with each person assigned a weight of 165 lbs.). The davit arms are ignored because their weight rests on the stopper bar at the embarkation position.

(2) Calculation Requirements. Calculation of the safety factor is generally done during the initial approval process. However, as shipyards often have favored sources of supply and selection criteria for wire rope (6 x 19, 6 x 37, etc.), calculations should be made for the falls as in the following example: A davit has an approved working load of 22,000 lbs. per set (11,000 lbs. per arm) and with two-part falls on each arm. Breaking strength of the wire rope as given in the catalogue is 45,200 lbs.

(a) Load per arm 11,000 lbs.

(b) Load per wire 5,500 lbs.

(c) Factor of Safety 45,200/5,500 = 8.2

These falls are satisfactory because the minimum safety factor of 6.0 is attained.

FIGURE 4-3
LIFEBOAT FALLS

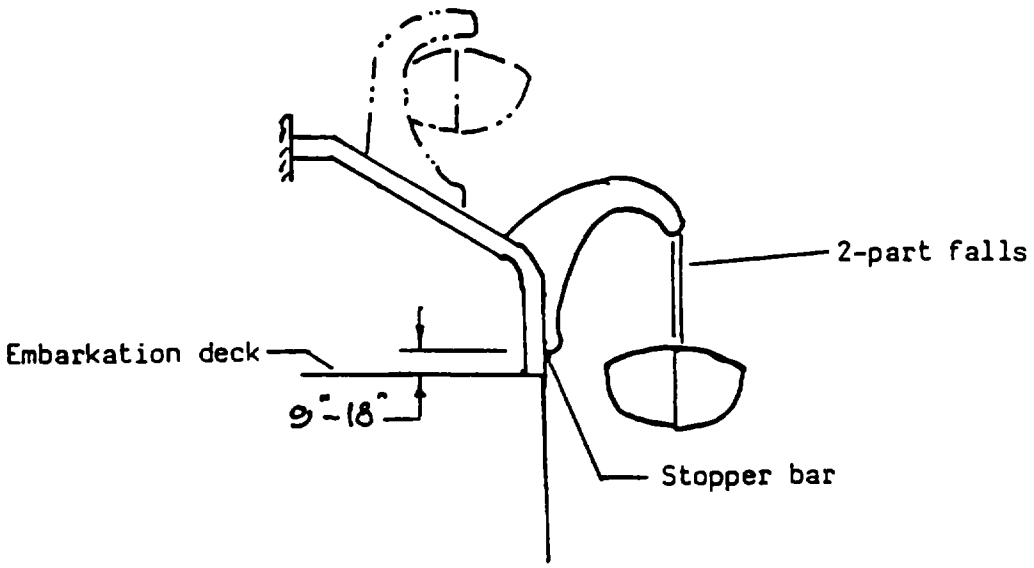

4.F.10. Location Of Lifeboats Relative To Propeller(s).

a. Regulatory Citations.

(1)	Tankers	46 CFR 33.05-3(c)(2), 33.20-1(d)
(2)	Passenger Vessels	46 CFR 75.15-10(b)(4)
(3)	Cargo/Miscellaneous Vessels	46 CFR 94.15-10(b)(4)
(4)	Oceanographic Research Vessels	46 CFR 192.15-10(b)(4)

b. General Requirements. When lifeboats are launched, they must not become fouled in the propeller(s) of a vessel. The requirements for tankers and oceanographic research vessels are explicit. For passenger and cargo/miscellaneous vessels, an acceptable horizontal clearance will be the lesser value of 40 feet or 1.5 lifeboat lengths from the aft end of the boat to the forward edge of the propeller aperture (see Figure 4-4). Such clearance is not required for slab-sided or tunnel-sterned vessels, the designs of which provide sufficient protection for lifeboats launched close to a propeller.

11. Access To Stowed Lifeboats.

a. Regulatory Citations.

(1)	Tankers	46 CFR 33.20-1(e),-10
(2)	Passenger Vessels	46 CFR 72.10-40(a), 75.15-10(b)(2)
(3)	Cargo/Miscellaneous Vessels	46 CFR 92.10-40(a), 94.15-10(b)(2)
(4)	Oceanographic Research Vessels	46 CFR 190.10-40(a), 192.15-10(b)(2)

b. Lifeboats Retained On Gravity Davits. Such craft are stowed at a considerable height above the embarkation deck. For such installations, access by boat crews is provided by a permanently installed ladder from the deck to the upper inboard end of s trackway, together with a jackstay (handhold) and a foot tread, or a catwalk running from an adjacent deckhouse. Variations similar to the details shown in Figure 4-5 are acceptable.

12. Lifeboat Davit Tricing Pendants And Frapping Lines.

a. Regulatory Citations.

(1)	Tankers	46 CFR 33.20-1(f)

FIGURE 4-4
LOCATION OF LIFEBOATS RELATIVE TO PROPELLER

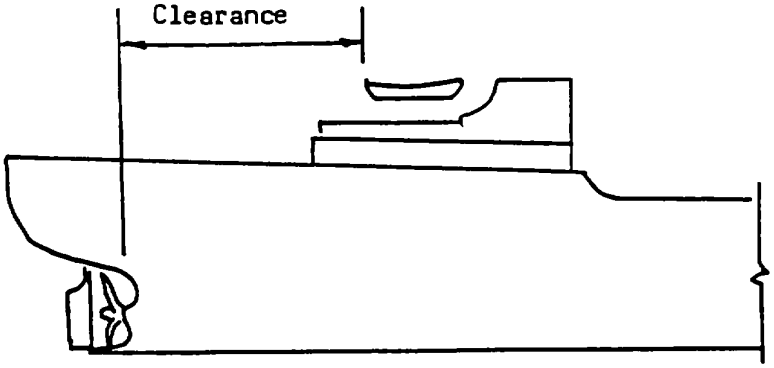

FIGURE 4-5

ACCESS TO STOWED LIFEBOATS

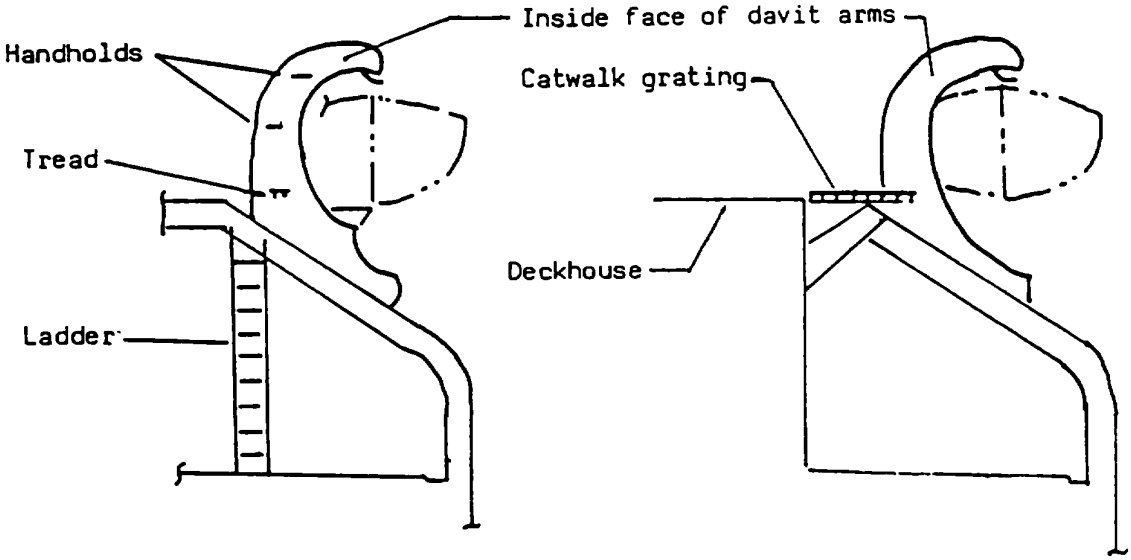

4.F.12.a. (2) Passenger Vessels 46 CFR 75.15-10(a)(4) and (b)(7), 75.25-5(d)

(3) Cargo/Miscellaneous Vessels 46 CFR 94.15-10(a)(4) and (b)(6), 94.25-5(d)

(4) Oceanographic Research Vessels 46 CFR 192.15-10(a)(4) and (b)(6), 192.25-5(d)

b. General Requirements. To achieve the boat launching performance required by these regulations, it is necessary to provide tricing pendants and frapping lines on gravity davits and frapping lines on mechanical davits, as well as a cleat near each davit arm to secure the frapping lines. Although these additions are not detailed in the regulations, evidence of their need is shown in the launching instructions contained in the Manual for Lifeboatmen, CG-175. These illustrate a "McCluney" hook used to release the tricing pendants after persons have embarked in a lifeboat. Wire rope tricing pendants are installed on gravity davits to pull the unloaded boat into the side of the vessel as it is being lowered to the embarkation deck. Since tricing pendants are not intended to support the weight of a loaded lifeboat, adequate strength can be attained if they maintain the specified safety factor on the basis of one-half the unloaded weight of the boat. Tricing pendants and frapping lines are not required with gravity davits handling boats whose passengers board the boat at its inboard stowage position. This is permissible because such boats, by omitting the stop at an embarkation deck, eliminate the need for such gear.

13. Davit Span Wires/Lifelines.

a. Resulatory Citations.

(1) Tankers 46 CFR 33.20-1(c)(2)

(2) Passenger Vessels 46 CFR 75.25-10(b),-15(b)

(3) Cargo/Miscellaneous Vessels 46 CFR 94.25-10(b),-15(b)

(4) Oceanographic Research Vessels 46 CFR 192.25-10(b)

b. General Requirements. Each gravity and mechanical davit installation for an open lifeboat shall be fitted with a span wire for supporting at least two lifelines. The lifelines shall be long enough to reach the vessel's lightest draft with the vessel listing 15' either way (see Figure 4-6).

14. Lifeboat Skates And Skid Stanchion

a. Regulatory Citations.

(1) Tankers 46 CFR 33.20-1(e)(5)

FIGURE 4-6
DAVIT SPAN AND LIFELINES

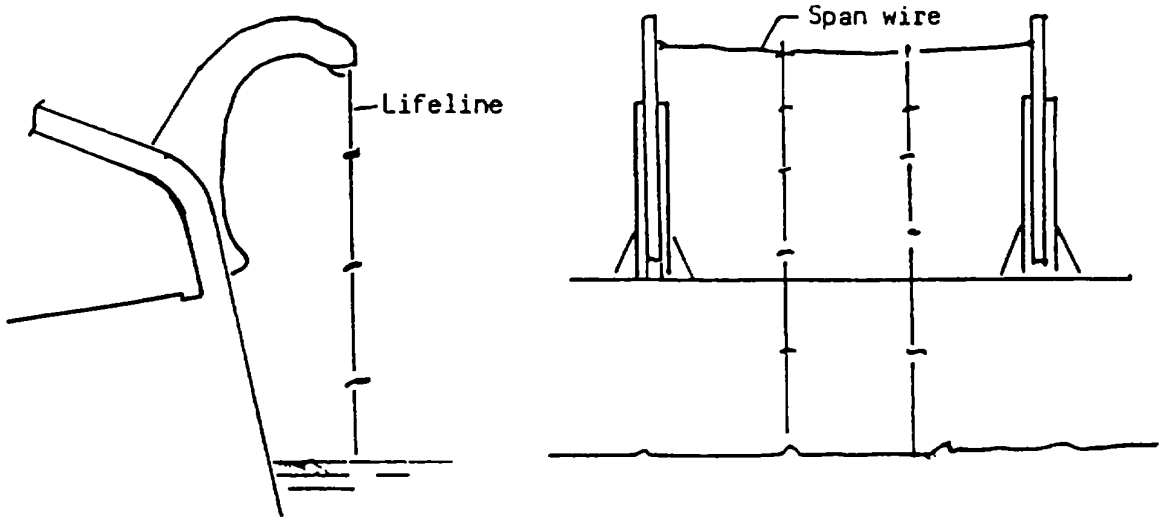

4.F.14.a. (2) Passenger Vessels 46 CFR 75.15-10(b)(8)

(3) Cargo/Miscellaneous Vessels 46 CFR 94.15-10(b)(7)

(4) Oceanographic Research Vessels 46 CFR 192.15-10(b)(7)

b. General Requirements. Figure 4-7 illustrates skates and skid stanchions as required by these regulations. Vertical skid stanchions are also installed on the vessel to enable a lifeboat to be lowered across any large openings of a deckhouse or between deck levels that would be too extensive for the skates to cross. The need for skid stanchions is not explicitly stated in the regulations, but may be inferred from the general requirements of 46 CFR 33.20-15(a), 75.15-10(a)(4), 94.15-10(a)(4), and 192.15-10 (a)(4).

15. Overboard Discharge Openings.

a. Regulatory Citations.

(1) Tankers 46 CFR 33.20-1(c)(4)

(2) Passenger Vessels 46 CFR 75.15-10(b)(10)

(3) Cargo/Miscellaneous Vessels 46 CFR 94.15-10(b)(8)

(4) Oceanographic Research Vessels 46 CFR 192.15-10(b)(8)

b. General Requirements. These regulations involve openings from which a continuous stream of water will be flowing. Figure 4-8 illustrates a split-pipe baffle used with such openings. Deck scuppers and small drains discharging infrequently do not require baffles.

16. Embarkation Ladders For Lifeboats/Life Rafts.

a. Regulatory Citations.

(1) Tankers 46 CFR 33.20-1(c)(1), -3(a)

(2) Passenger Vessels 46 CFR 75.50-5(a)(2), -7(a)

(3) Cargo/Miscellaneous Vessels 46 CFR 94.50-5(b)(1), -7(a)

(4) Oceanographic Research Vessels 46 CFR 192.50-5(b)(1), -7(a)

b. General Requirements. A chain embarkation ladder approved under 46 CFR 160.017 is required at each set of lifeboat davits and at locations where inflatable life rafts are substituted for lifeboats. Although not specified by these regulations, the ladder is usually coiled or faked on a wooden platform and stowed slightly forward of the after davit. This stowage area prevents the ladder from being crushed by the boat, being kicked over the side and falling on persons

FIGURE 4-7
LIFEBOAT SKATES AND SKID STANCHIONS

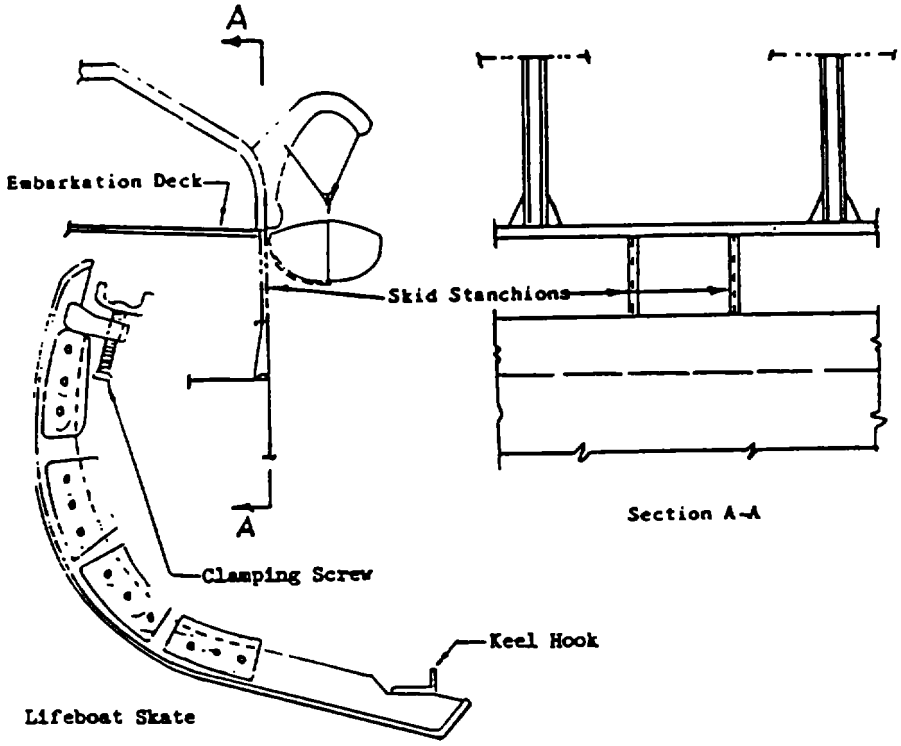

FIGURE 4-8
OVERBOARD DISCHARGE OPENINGS

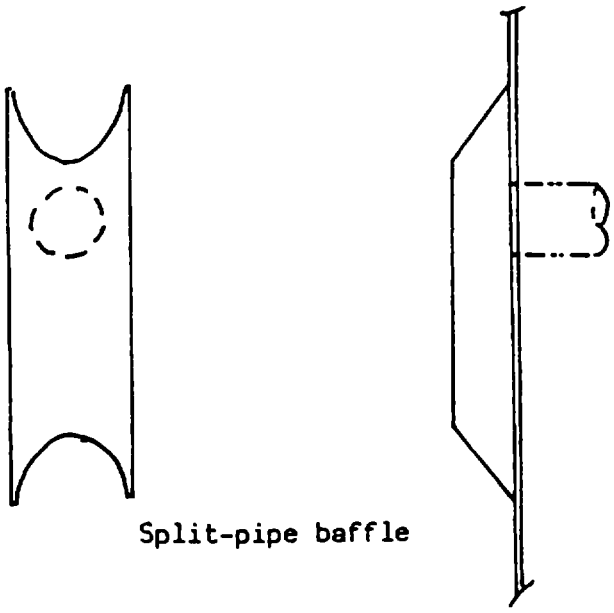

4.F.16. b. (cont'd) in the boat, or holing the boat. A ladder suspended from this position also permits easy access to the lifeboat when it is waterborne and riding slightly aft on its sea painter (see Figure 4-9 for illustration). A new SOLAS revision effective in 1986, requires rope ladders for this application. In anticipation of this requirement, some rope ladders are now approved as equivalent to chain ladders and have a 160.017 approval number.

c. Exceptions. An exception to the design illustrated in Figure 4-9 is necessary for a ladder installed with "Miranda" gravity davits (which are made by two different firms). With this design, the lifeboat rides on a cradle whose end frames are connected by fore-and-aft bracing. As the location of the bracing close to the side shell of the vessel does not provide any clearance, an embarkation ladder must be located at the "Miranda" location shown in the place. With a "Miranda" davit, all launching operations are controlled from within the lifeboat. Consequently, the embarkation ladder is of reduced utility, as there is no need for the winch operator and the frapping line handlers to descend to the boat following its launching.

17. Pilot Ladders.

a. Regulatory Citations.

(1)	Tankers	46 CFR 35.01-20(a)
(2)	Passenger Vessels	46 CFR 75.50-5(a)(3)
(3)	Cargo/Miscellaneous Vessels	46 CFR 94.50-5(b)(2)
(4)	Oceanographic Research Vessels	46 CFR 192.50-5(b)(2)

b. General Requirements. These regulations stipulate that a rope embarkation/debarkation ladder, approved under 46 CFR 163.003, with suitable spreaders, a "man rope," and a safety line, are required by all vessels engaged in ocean, coastwise, and Great Lakes trade. Pilot boarding, while not an emergency situation, involves similar personnel risks to those dealt with in lifesaving system design. It is included here since design considerations are similar. [NOTE: Provision for boardings at sea by persons other than pilots should be given the same consideration.] Pilot boarding is a frequent occurrence during the life of a ship and it must be properly addressed to minimize risk to life. Since it is routine, it is often neglected in basic ship design, and can pose a number of problems to owners and operators-and to pilots.

c. Requirements Under SOLAS. The SOLAS Convention and its participating administrations specify the design details for pilot ladders and powered pilot hoists and their arrangements. The basic design principle provides a straight, clear side to permit the ladder to lie flat against the vessel, from the bottom of the ladder to the point of

4.F.17. c. (cont'd) access with a straightforward direct transfer over the gunwale. Provision for boarding at either side should be made. The location of pilot hoists and ladders should be resolved early in the design so that complicated solutions, such as placing boarding ports below freeboard decks, can be avoided. Pilots should not climb ladders for more than 30 feet (9 meters) or less than 5 feet (1.5 meters). For greater distances, an accommodation ladder leading aft or other means should be provided. Side ports should be of adequate size and height to facilitate safe entry, and any closure should be designed to not interfere with pilot boat operations (including radio antennae). Provision for over-the-side lighting should be made as well as for the deck landing area. Design features that complicate safe boarding include:

(1) Decks projecting beyond the vessel's side;

(2) Nonvertical sides;

(3) Rounded bulwarks;

(4) Outward-opening doors that get in the way of the pilot boat;

(5) Boarding ports too low to permit quick and safe boarding via the ladder;

(6) Rubbing bands;

(7) Overboard discharges; and

(8) Lack of adequate handholds.

d. Alternate Arrangements. Figures 4-10 and 4-11 depict relevant features of possible solutions for pilot ladder arrangements. A recent development that is gaining popular acceptance is a pilot hoist raised by a power winch. Provision is made for this portable unit on permanent platform locations, port and starboard. This installation is particularly advantageous on larger vessels.

18. Deck Cover Guards For Lifeboat Falls.

a. Regulatory Citations.

(1)	Tankers	46 CFR 32.01-15
(2)	Passenger Vessels	46 CFR 75.33-5(c)
(3)	Cargo/Miscellaneous Vessels	46 CFR 94.33-5(c)
(4)	Oceanographic Research Vessels	46 CFR 192.33-5(c)
(5)	Lifeboat Winches	46 CFR 160.015-2(i)

FIGURE 4-9
EMBARKATION LADDERS FOR LIFEBOATS

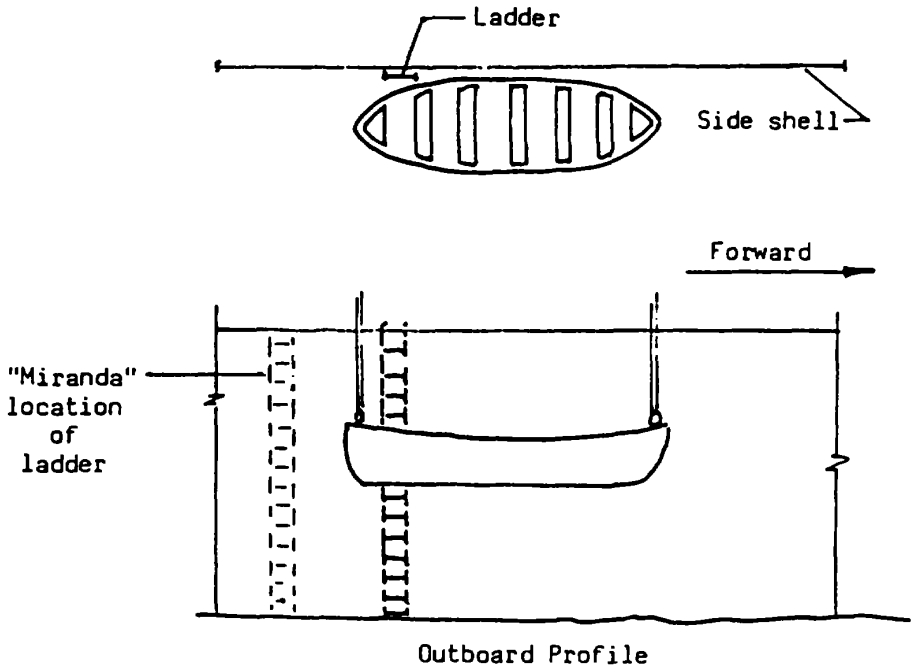

FIGURE 4-10
PILOT LADDERS

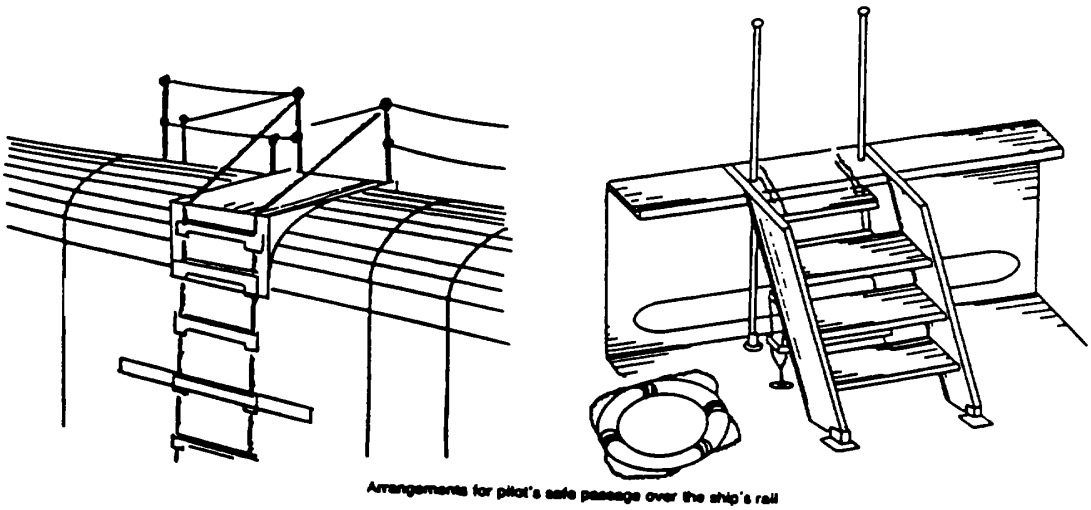

FIGURE 4-11
OVER-THE-SIDE RIGGING OF PILOT LADDERS

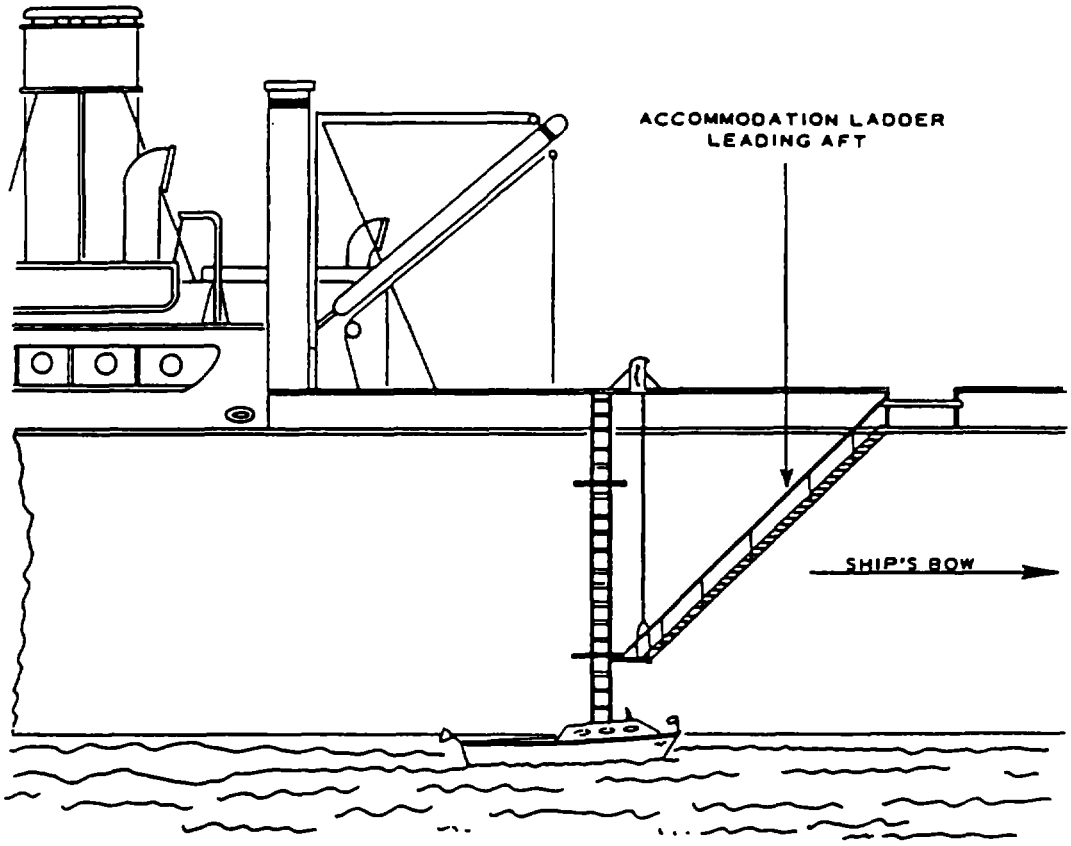

A. LARGE SHIP RIGGING

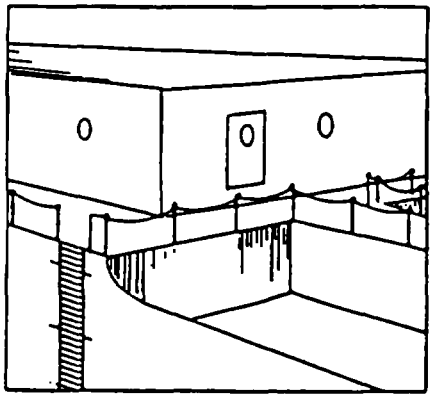

B. SMALL SHIP RIGGING

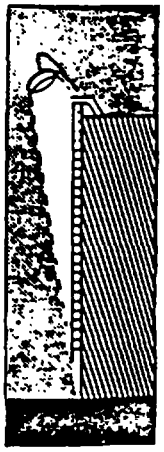

C. NIGHT LIGHTING

4.F.18. b. General Requirements. Cover guards for lifeboat falls that run along a deck are intended for the protection of personnel, not the falls. Cover guards are required on embarkation decks and marshalling areas adjacent to the davits. The tops of such cover guards should not exceed a height of 12 inches above the deck.

19. Guards In Dangerous Places.

a. Regulatory Citations.

(1)	Tankers	46 CFR 32.01-15
(2)	Passenger Vessels	46 CFR 72.40-20(a)
(3)	Cargo/Miscellaneous Vessels	46 CFR 92.25-15(a)
(4)	Oceanographic Research Vessels	46 CFR 190.25-15(a)

b. General Requirements. These regulations provide for gear guards, railings, or covers necessary for enclosing exposed machinery (gears and wire rope drums of lifeboat winches are usually enclosed by the manufacturers of the equipment). These requirements and 46 CFR 160.032-3(e) provide the authority for the closing screens on the undersides of the trackways of gravity davits.

20. Illumination Of Lifeboat Stowase Areas.

a. Regulatory Citations.

(1)	Tankers	46 CFR 33.20-1(c)(3)
(2)	Passenger Vessels	46 CFR 75.50-10, -15
(3)	Cargo/Miscellaneous Vessels	46 CFR 94.50-10, -15
(4)	Oceanographic Research Vessels	46 CFR 192.50-10, -15

b. General Requirements. Pivoting lightstands/floodlights will provide the necessary illumination for lifeboats under these requirements. Normally, one lightstand installed at the forward end of the boat is sufficient, although they may be installed at both ends. These lights can also be credited as the illumination for any life rafts which are stowed in the immediate vicinity (see Figure 4-12).

21. Stowage Of Inflatable Life Rafts.

a. Regulatory Citations.

(1)	Tankers	46 CFR 33.20-15
(2)	Passenger Vessels	46 CFR 75.15-10(a), -10(c)(8)

FIGURE 4-12
ILLUMINATION OF STOWAGE AREAS

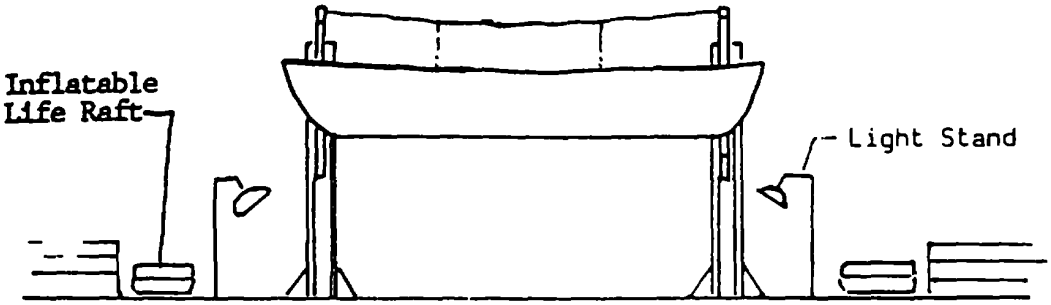

Outboard Profile

4.F.21.a. (3) Cargo/Miscellaneous Vessels 46 CFR 94.15-10(a), -10(c)(4)

(4) Oceanographic Research Vessels 46 CFR 192.15-10(a), -10(c)(3)

b. General Requirements. Inflatable life rafts shall be stowed in open areas on deck and clear of rigging and deckhouse overhangs in float-free locations. Stowage of rafts in the vicinity of lifeboat darers and adjacent to outboard railings is permissible, provided it does not interfere with the launching of lifeboats. Instructions for launching shall be posted adjacent to rafts whose locations on overhead or inaccessible racks make the instruction labels on their containers unreadable to nearby persons.

G. Pollution Abatement Measures.

1. Marine Sanitation Devices (MSD's).

a. Introduction. The necessity for sewage treatment systems aboard vessels was first addressed by Constess in 1970, when the Water Quality Improvement Act was passed. This act was the first codification of requirements for MSD's on commercial and pleasure vessels. Expansions of this control are highlighted below:

(1) 23 JUN 72: EPA requires sewage retention facilities on all toilet-equipped vessels; limited use of flow-through treatment devices on existing vessels is allowed during an interim period, to encourage early compliance (40 CFR 140).

(2) 18 OCT 72: Federal Water Pollution Control Act, Section 312 establishes discharge and no-discharge areas, and provides a mechanism for states to establish their own no-discharge areas (33 U.S.C. 1322).

(3) 30 JAN 75: Coast Guard regulations provide certification standards for MSD's, and require sewage retention devices aboard vessels. However, existing vessels may use flow-through treatment devices, installed before a certain date, for 3 years after the compliance deadline (33 CFR 159).

(4) 29 JAN 76: EPA amends regulations to permit use of flow-through treatment devices in waters other than landlocked freshwater lakes and rivers not accessible to interstate vessel traffic (40 CFR 140).

(5) 12 APR 76: The Coast Guard amends regulations to permit use of flow-through treatment devices beyond 1980, and sets certification standards for MSD's by Types (I, II, and III) for the first time (33 CFR 159).

(6) 3 JAN 77: The Coast Guard amends regulations to certify certain no-discharge devices (holding tanks) by definition (33 CFR 159).

4.G.1.a. (7) 28 NOV 77: The Coast Guard publishes a waiver permitting delay of Type I installations on existing vessels to 30 Jan 79 if certain conditions are met (42 FR 60619).

(8) 10 JUL 78: The Coast Guard publishes waiver permitting vessels 65 feet and less in length to use Type I, in lieu of Type II or III, devices beyond 30 Jan 80 (43 FR 29637).

(9) 25 OCT 78: U.S. Army Corps of Engineers (USACE) Public Notice 543 requires construction of pumpout facilities at new or substantially modified marinas, to be enforced by the Coast Guard.

(10) 13 FEB 79: The Coast Guard withdraws from agreement with USACE on enforcement of marina pumpout facility requirement.

(11) 18 JUN 79: The Coast Guard issues first limited waiver of MSD requirements to a commercial vessel (M/V PRINCESS PATRICIA).

b. Testing And Inspection. Testing and design criteria for MSD certification are provided in 33 CFR 159. Devices that satisfactorily complete testing are assigned a certification number, such as "159.15/ 1056/3/II," which identifies the device thus:

(1)	159.15	Code of Federal Regulations (CFR) subpart requiring device
(2)	1056	Manufacturer's code number;
(3)	3	Model certified (each model separately numbered)
(4)	II	Device type

2. Listings. Listings of certified MSD's can be found in Equipment Lists, COMDTINST M16714.3. Certifications are valid for 5 years unless suspended, revoked, or terminated by the Commandant. They may be renewed upon the manufacturer's written application, submitted 3 months prior to their expiration. Chapter 18, volume II of this manual provides guidance for the inspection of MSD installations aboard vessels. Figures are provided for the calculation of appropriate MSD type and size for a vessel, based upon the size of crew and passenger load, hours of operation, and type of flushing arrangement installed.

3. Use Of Chemicals.

a. Introduction. The predominant chemical used in shipboard MSD systems is calcium hypochlorite. Labels on packages of this chemical warn of possible fire or explosion if contents are mishandled. Such warnings are directed primarily at the storage and bulk handling of the compound, not its use in an MSD system. Calcium hypochlorite should always be stored in cool, dry locations, away from combustible contaminants such as rags, paper, fuels, oils, and organic matter. It should not be mixed with any material other than water, and it should

4.G.3. a. (cont'd) be added to water, not vice versa. Once the compound is added to the system, no danger exists.

b. Disposal Procedures. Should it become necessary, due to a spill or contamination by other matter, the dry compound should be disposed of by flushing or disposing through a sink immediately. Where drainage is not readily available, sweepings should be placed into a container of water and the broom or swab rinsed out immediately. "Dry" disposal of sweepings should not be permitted: the dust is dangerous in shipboard drafts, and exposed dry quantities (as in a waste can) create a significant fire hazard. Calcium hypochlorite is not considered a pollutant by EPA in small quantities such as those used in MSD systems.

4. Gas Generation. Generation of hazardous gases in Type III (holding tank) MSD's has received much attention, particularly where explosive gases are generated from collected wastes. This concern has been belied in two reports. One, published by the U.S. Navy, is entitled "Biodegradation of Shipboard Waste Water in Collection, Holding, and Transfer Tanks" (DTNSRDC78/041). The other, "A Study of Waste Water Handling, Holding, and Disposal from Washington State Ferries," Research Project Report 27.1, July 1977, is published by the Civil Engineering Department, University of Washington. Although both reports document the fact that generation of methane gas is minimal, hydrogen sulfide is generated in concentrations that are lethal in unventilated or poorly ventilated tanks. In those cases where measurements have been made, the explosive limit of 4.0 percent methane has not been reached. However, concentrations of methane or hydrogen sulfide averaging 0.1 percent are lethal through inhalation.

5. Oil Pollution Abatement Devices.

a. Introduction. The International Convention for the Prevention of Pollution from Ships, 1973 and its 1978 Protocol (MARPOL 73/78) is in force and requires oily-water separators, bilge monitors and alarms, and cargo oil monitors on certain vessels. The design and testing requirements for such equipment are described in 46 CFR 162.050. These requirements are, generally, applications of INO Resolution A.393(x), drafted by the organization's Marine Environmental Protection Committee. This resolution details test procedures for 100ppm and 15ppm separators, 100ppm bilge monitors, and 15ppm bilge alarms, and provides for a tank vessel cargo monitor to determine the oil concentration of discharged ballast in ppm. Such a monitor is the heart of a monitoring and control system that, when fully implemented, records continuously the rate of oil discharged in liters per nautical mile, the total quantity discharged, and the times and dates at which discharges occurred. MARPOL 73/78 and IN0 Resolution A.393(x) also provide for oil-water interface detectors on certain tankers. These are also approved by the Commandant (G-MVI-3), although they are not yet covered in 46 CFR.

b. Approval Testing. The Coast Guard's approval testing program for such equipment is conducted by recognized independent testing facilities.

4.G.5. b. (cont'd) Plan review to verify compliance with the applicable Marine and Electrical Engineering Regulations. When a piece of equipment is found to be satisfactory in all respects, it is assigned an approval number by Commandant (G-MVI) in the same manner as an item of lifesaving equipment. The number "162.050/5006/0" would thus indicate:

(1)	162.050	CFR subpart requiring approval
(2)	5006	Type of equipment and approval number
(3)	0	Revision number

c. Equipment Types. Items approved under 46 CFR 162.050 are categorized as follows:

(1)	1000 series	Separators
(2)	5000 series	Bilge Alarms
(3)	5000 series	Cargo Monitors
(4)	9000 series	Bilge Monitors

Oil-water interface detectors are assigned 162.055 numbers. Regulations dealing with such equipment are located in 53 CFR 155 for oily-water separators and bilge monitor-alarms, in 53 CFR 157 for cargo monitors. Approved items are published in Equipment Lists. Approvals are valid for 5 years unless suspended, revoked, or terminated by the Commandant, and may be renewed upon written application by the manufacturer 3 months prior to expiration.

d. Requirements For Oily-Water Separators. Coast Guard approved oily-water separators are mandatory installations for new U.S. vessels greater than 400 gross tons (GT) making international voyages, and in 1986 for existing vessels. Foreign vessels may use foreign-built, IMO approved equipment in lieu of Coast Guard approved equipment, effective at the same times.

H. Fire Protection Systems.

1. Approval Of Structural Materials.

a. Introduction. The relevant approval specifications are provided in 46 CFR 164.006 through 164.009 and 164.012. The basic principles of the Coast Guard's structural fire protection requirements are:

(1) Restricted use of combustible materials;

(2) Separation of accommodation spaces from the remainder of the vessel by thermal and structural boundaries;

4.H.1.a. (3) Protection of the means of escape; and

(4) Early detection, containment, or extinction of any fire in the space of origin.

b. Deck Coverings. Under 46 CFR 164.006, a sample deck covering must be subjected to a fire resistance and integrity test and a smoke test. This sample, incorporating normal protective coatings and deck attachments, is examined for its ability to limit the average temperature rise on the unexposed surface to 250' above ambient temperature without excessive cracking or buckling. The smoke test is intended to ensure that the material will produce a minimum of smoke when exposed to high temperatures. Deck overlays not exceeding 3/8" in thickness need not be approved, and may be applied over the required approved deck construction. Where a fire resistant rating of a deck is not required, deck coverings of noncombustible materials (see 46 CFR 164.009) can be used.

c. Noncombustible Materials. 46 CFR 164.009 is the basic specification for most material approvals. By requiring most insulation and insulation-type materials to meet this specification, the total Quantity of combustible materials is greatly reduced. Subpart 164.009 is not intended to determine heat transfer characteristics nor control of properties, but rather the material's relative ability to prevent sustained combustion. The criteria for acceptance are based upon limited temperature rise, limited sustained flaming, and minimum volume loss. Section 164.009-5 lists materials that, while not specifically approved, may be used as noncombustible materials in merchant vessel construction. No tests are required and no Certificates of Approval are issued for these.

d. Structural Insulation. In accordance with 46 CFR 164.007, these materials must meet the specifications of 164.009. These materials are tested to measure their ability to limit the average temperature rise of a steel bulkhead to 250F at the end of a 60-minute standard fire test.

e. Bulkhead Panels. The basic materials for bulkhead panels specified by 46 CFR 164.008 are also required to meet the specifications of 164.009. These materials are used alone as divisional bulkheads (B-15, B-0) or in conjunction with steel bulkheads to form thermal boundaries (A-60, A-30, or A-15). Navigation and Vessel Inspection Circular 6-80 outlines the application of approved insulation, bulkhead panels, and deck coverings to achieve the structural fire protection classifications required by various regulations. A set of typical installation and joiner detail drawings is furnished by the bulkhead panel manufacturer as part of the plan submittal. Copies of these drawings, stamped "Approved," are forwarded to the MSC.

4.H.1. f. Interior Finishes. Sample interior finishes must be subjected to the American Society for Testing and Materials (ASTM) E84 tunnel test in accordance with 46 CFR L64.012. These materials are tested for ability to provide low flame spread and smoke development ratings. [NOTE: Interior finish materials in excess of 0.075" thickness are required to comply with the provisions of 164.009 instead.]

2. Materials Testing.

a. In The U.S. As the Coast Guard does not conduct its own approval tests, the Commandant has authorized the following organizations to conduct approval tests on a case-by-case basis:

(1) Underwriters Laboratories, Inc. (UL), 333 Pfingsten Road, Northbrook, IL 60062.

(2) National Bureau of Standards, Washington, D.C. 20234.

b. Foreign Testing. It is possible for structural fire protection materials that are produced overseas to be approved by the Coast Guard. To facilitate their use on foreign-built U.S. vessels, the Commandant has accepted UL as a "designated inspector" for certain limited responsibilities outside the United States. These responsibilities generally involve:

(1) Verification of manufacturers' claims of production procedures and quality control;

(2) Selection of samples to be sent to the U.S. for testing; and

(3) Reinspection of production facilities and selection of samples for retest as requested by the Commandant.

Materials approved under the preceding specifications are certified as approved by the Commandant.

I. Approval Of Equipment And Systems.

1. Portable Fire Extinguishers. Under 46 CFR 162.028, portable extinguishers (gross weight not exceeding 55 pounds) must be tested and labeled by UL. These extinguishers must meet all criteria in this specification, including salt spray corrosion and vibration tests, and have marine mounting brackets provided. In 1962, the Coast Guard discontinued issuance of Certificates of Approval for portable extinguishers, due to the large number of models and their constant modifications. Today, each approved extinguisher displays on its label the following legend: "Marine Type, USCG Type_____, Size_____, Approval No. 162.028/Ex. "(the latter figure is the laboratory file number). Type and size designations are based upon the nature of the extinguishing agent and the quantity of that agent in the extinguisher. Figure 4-13 lists the minimum quantities of agents required in various types of portable extinguishers.

FIGURE 4-13

PORTABLE AND SEMI-PORTABLE FIRE EXTINGUISHERS

Classification		Water & Soda Acid	Foam(')	Carbon Dioxide	Dry Chemical	Halon 1211
Type	Size	Gals.	Gals.	Lbs.	Lbs.	Lbs.
A	II	2-1/2	2-1/2	--	5	--
B	I	--	1-1/4	4	2	2-1/2
B	II	--	2-1/2	15	10	10(2)
B	III	--	12	35	20	--
B	IV	--	20	50	30	--
B	V	--	40	100	50	--
C	I	--	--	4	2	2-1/2
C	II	--	--	15	10	10(2)
C	III	--	--	35	20	--
C	IV	--	--	50	30	--

(1) No longer made, but may be kept if in good and serviceable condition.

(2) For outside use only.

4.I.1. (cont'd) [NOTE: The Coast Guard also accepts certain UL listed fire extinguishers as equivalent to Coast Guard approved extinguishers, as specified in NVIC 3-82.]

2. Semi-Portable Extinguishers. Semi-portable extinguishers (gross weight exceeding 55 pounds) are tested and labeled in accordance with 46 CFR 162.039 in a manner similar to that for portable extinguishers. They may not use external means of expelling extinguishing agents (i.e., they must be completely self-contained). Wheeled semi-portables may be approved for marine use and installed in accordance with the applicable regulations. Figure 4-13 also lists the minimum quantities of agents required in various types of semi-portable extinguishers.

3. Fixed Extinguishing Systems.

a. Introduction. Fixed fire extinguishing systems approved under 46 CFR 162.029 are intended for small, unmanned engine compartments on uninspected vessels, including pleasure craft such as inboard-outboard types. These relatively simple Halon or CO2 systems are tested and approved for protection of a certain maximum volume of space, as specified in the installation and maintenance manual provided with each system. These systems must have been tested by, and must be covered by the factory-follow-up inspection program of, an independent testing laboratory recognized by the Coast Guard.

b. Approval Of Fixed Water Spray Systems. These are approved in accordance with the provisions of Subchapter H and issued the basic approval number "162.036." Fire tests are conducted in a simulated pump room; the approval covers the entire system, including fittings, strainers, valves, and spray nozzles.

c. Approval Of Carbon Dioxide Systems. These are approved in accordance with the requirements of Subchapter H and issued the basic approval number "162.038." The manufacturer must furnish supporting data, such as a UL listing report, drawings of system components, and a design manual, for system approval. The system must also comply with the provisions of NFPA's Pamphlet 12, "Carbon Dioxide Fire Extinguishing Systems." Lists of approved CO2 system components are forwarded to the MSC and amended as new ones are accepted.

d. Approval Of Halon 1301 Systems. These are approved on a case-by-case basis as equivalent to meeting Subchapter H requirements for CO2 systems; they are issued the basic approval number "162.035." The manufacturer shall provide supporting data similar to that required for approval of CO2 systems. The system is examined for compatibility with the marine environment and compliance with the provisions of NFPA Pamphlet 12A, "Halon 1301 Fire Extinguishing Systems."

e. Approval Of Foam Systems. These are approved in accordance with Subchapter D requirements and given an approval number of "162.033." The manufacturer shall provide supporting data similar to that required

4.1.3. (e) (cont'd) for CO2 and Halon systems. Fire extinguishing tests may be observed by Coast Guard representatives. Copies of approved manuals that contain listings of approved parts and typical calculations are forwarded to the MSC.

4. Combination Fire Hose Nozzles. The provisions of 46 CFR 162.027 for combination nozzles emitting a solid stream or high velocity water fog require (among other standards) specified clearances within a nozzle to prevent foreign matter that may be in the water line from blocking the stream or spray of water. All nozzle bodies shall be made of brass and must be able to accommodate low velocity fog applicators.

5. Respiratory Protective Equipment. The approval specification for gas masks, self-contained breathing apparatus, and supplied-air respirators is 46 CFR 160.011. This specification required approval of equipment by the former U.S. Bureau of Mines as a requisite for Coast Guard approval. The approval functions of the Bureau of Mines have been assumed jointly by the National Institute for Occupational Safety and Health (NIOSH) and the Nine Safety and Health Administration (MSHA). Respiratory equipment must now have NIOSH/MSHA approval to meet this specification. Such equipment is also considered by the Coast Guard for its suitability for shipboard use with regard to the kind of protection afforded by the device, the kinds of hazards expected aboard ship, and the bulk and weight of the device relative to limited space and arrangements of accommodations, ladders, scuttles, hatches, etc. Supplied-air respirators (hose masks) are no longer approved by NIOSH for use in atmospheres immediately dangerous to life and health, and Coast Guard approval for these devices has been terminated. A suitable replacement is Coast Guard approved pressure-demand, self-contained breathing apparatus, as outlined in NVIC 13-80.

6. Flame Safety Lamps. The provisions of 46 CFR 160.016 require compliance with NIL-L-1204, "Lamps, Safety, Flame," in addition to Coast Guard plan review. Present developments in the field of oxygen depletion meters and combination oxygen depletion/combustible gas indicators have prompted analyses of applicable requirements and industry needs with a view towards substitution of such meters for flame safety lamps.

MARINE SAFETY MANUAL

CHAPTER 5. TECHNICAL CONSIDERATIONS FOR VESSEL DESIGN

CONTENTS

SECTION		PAGE
5.A.	Ship Design And Marine Safety	5-1
5.A.1.	Introduction	5-1
5.A.2.	Technical Concerns	5-2
5.A.3.	Intragovernmental Relations In Marine Safety	5-3
5.A 3.a.	Occupational Safety And Health Administration (OSHA)	5-3
5.A.3.b.	Public Health Service (PES)	5-3
5.A.3.c.	U.S. Minerals Management Service (MMS)	5-3
5.A.3.c.(1)	Introduction	5-3
5.A 3.c.(2)	MMS Actions	5-2
5.A.3.c.(3)	Coast Guard Actions	5-4
5.A.3.d.	Nuclear Regulatory Commission (NRC)	5-4
5.A.3.e.	U.S. Navy National Defense Features (NDF) Programs	5-4
5.A.3.e.(1)	Objective	5-4
5.A.2.e.(2)	Standards	5-5
5.A.4.	New Design Concepts	5-5
5.A.4.a.	Introduction	5-5
5.A.4.b.	Helicopter Facilities Aboard Commercial Vessels	5-5
5.A.4.c.	Marine Nuclear Power Applications	5-5
5.A.4.d.	Ocean Thermal Energy Conversion (OTEC) Program	5-6
5.B.	Fire Protection And Vessel Design	5-6
5.B.1.	Authority	5-6
5.B.2.	Program Concerns	5-6
5.B.3.	Structural Fire Protection Materials	5-7
5.B.4.	Structural Fire Protection Arrangements	5-7
5.B.5.	Fire Extinguishing Systems	5-8
5.B.6.	Portable Fire Extinguishers	5-8
5.B.7.	Detection Systems	5-9
5.B.8.	Chemical Carriers	5-9
5.B.9.	Liquefied Natural Gas (LNG) Carriers	5-9
5.B.10.	Mobile Offshore Drilling Units (MODU's)	5-9
5.B.11.	Vessels Carrying Portable Tanks	5-10
5.B.12.	Hovercraft And Hydrofoils Used As Passenger Vessels	5-10
5.B.12.a.	General Considerations	5-10
5.B.12.b.	Calculating Evacuation Times	5-10
5.B.12.c.	On Board Analysis Of Evacuation Time	5-11
5.B.12.d.	Acceptable Materials	5-11
5.B.13.	Tank Barges	5-12
5.C.	Hull Arrangements And Fittings	5-12
5.C.1.	Access And Egress Routes	5-12
5.C.1.a.	Rails And Guards Aboard Unmanned Deck Cargo Barges	5-12
	For Ocean Service	5-12
5.C.1.b.	Use Of Air Ports Aboard Manned Tank Barges	5-13
5.C.1.c.	Vertical Ladders	5-15

CONTENTS

SECTION		PAGE
5.C.1.d.	Vertical Engineroom Escape Ladders Aboard Offshore Supply Vessels (OSV's)	5-13
5.C.1.e.	Inspection Clearances For Independent Or Segregated Cargo Tanks	5-14
5.C.1.f.	Rigging Of Lifelines Between Tank Vessel Deckhouses	5-14
5.C.2.	General Arrangements	5-15
5.C.2.a.	Private And Semi-Private Washrooms And Toilet Rooms	5-15
5.C.2.b.	Radio Room Locations	5-15
5.C.2.c.	Tinted Windows In Navigating Spaces	5-15
5.C.2.d.	Use Of Tanks, Voids, And Cofferdams	5-16
5.C.2.e.	Fuel Lines Passing Through Accommodation Spaces	5-16
5.C.2.f.	Location Of Emergency Sources Of Power	5-16
5.C.3.	Cargo- And Weight-Handling Gear	5-16
5.D.	Oversight Of Third-Party Inspections	5-17
5.D.1.	Inspections Conducted By The American Bureau Of Shipping (ABS)	5-17
5.D.1.a.	Introduction	5-17
5.D.1.b.	Coast Guard Participation On ABS Committees	5-18
5.D.1.c.	ABS Publications	5-19
5.D.1.d.	ABS Circulars	5-19
5.D.2.	Memorandums Of Understanding (MOU's)	5-20
5.D.2.a.	CQ/ABS MOU I	5-20
5.D.2.b.	CG/ABS MOU II	5-20
5.D.2.c	NVIC 10-82	5-20
5.D.4.	Coast Guard Oversight Of ABS Activities	5-20
5.D.4.a.	Introduction	5-20
5.D.4.b.	Objectives Of Oversight	5-20
5.D.4.c.	Oversight Program	5-21
5.D.4.c.(1)	Unify The Plan Review And Inspection Functions Of Various Coast Guard Field Units	5-21
5.D.4.c.(2)	Review Present Plan Review And Inspection Policies And Their Dissemination	5-21
5.D.4.c.(3)	Provide ABS With Policies, Interpretations, And Instructions	5-21
5.D.4.c.(4)	Monitor ABS Activities	5-22
5.D.4.d.	Oversight Of Other Classification Societies	5-22
5.E.	Controllability In Vessel Design	5-23
5.E.1.	Bridge Design And Layout	5-23
5.E.2.	Visibility From The Bridge	5-23
5.E.2.a.	Introduction	5-23
5.E.2.b.	Review Using Recognized Standards	5-23
5.E.2.c.	Review Using Coast Guard Guidelines	5-23
5.E.2.d.	Alternate Evaluation Of Blind Zones	5-24
5.E.2.d.(1)	Viewing Points	5-24
5.E.2.d.(2)	Blind Zone Limits	5-24

CONTENTS

SECTION		PAGE
5.E.2.d.(2)(a)	From The Ship's Centerline (Viewing Point (a) Above)	5-24
5.E.2.d.(2)(b)	From The Wheelhouse Window (Viewing Point (b) Above)	5-24
5.E.2.d.(2)(c)	From The Bridge Wing (Viewing Point (c) Above)	5-25
5.E.2.e.	Navigation Visibility On Pushed Barges	5-25
5.E.3.	Human/Vessel Interface	5-25

CHAPTER 5. TECHNICAL CONSIDERATIONS FOR VESSEL DESIGN

A. Ship Design And Marine Safety.

1. Introduction. The contents of this chapter are directly related to the responsibilities of the Ship Design Branch, Commandant (G-HTH-4), at Coast Guard Headquarters. The objectives of the branch can be summarized as follows:

   a. Ensure an adequate level of safety and protection of life, property, and the marine environment through a comprehensive program of regulations, oversight, safety standards, and policy.

   b. Maintain expertise and provide technical support to the Commandant, Coast Guard units, other government agencies, foreign governments, industry, and the public relating to vessel:

      (1) General design;

      (2) Operations;

      (3) Fire protection and personnel safety;.

      (4) Human engineering;

      (5) Systems interface;

      (6) Marine nuclear applications; and

      (7) Arrangements and outfitting.

   c. Review and approve plans, specifications, and technical data for vessels of unusual or unique design to determine compliance with the intent of'existing regulations. Serve as the lead branch for appeals and review of vessel plans involving more than a single branch within the division to ensure completeness and consistency of the review.

   d. Initiate and review proposed international and national regulations, standards, and specifications to ensure adequate and reasonable safety in response to:

      (1) New developments in marine transportation concepts,

      (2) Casualty analysis;

      (3) Research and development activities;

      (4) Legislative and executive mandates;

      (5) Recommendations of the National Transportation Safety Board (NTSB); and

5.A.1.d. (6) Resolutions and conventions of the International Naritime Organization (IMO).

e. Formulate policy and instructions for the guidance of naval architects, marine engineers, and shipbuilders, outlining minimum acceptable safety standards for vessels. Answer inquiries and provide guidance on regulations to the MSC, district commanders (m), marine inspection and safety offices, and the marine industry. Maintain a uniform policy at the MSC. Resolve industry appeals.

f. Maintain liaison with classification societies, other government agencies, and national and international standards development organizations. Participate in related committees and in the standards development of such organizations.

g. Participate in technical and professional societies, and industry and classification society committees to develop and evaluate safety standards.

h. Be responsible for and coordinate oversight of vessel design functions performed by the American Bureau of Shipping (ABS) on behalf of the Coast Guard under current agreements and directives.

i. Participate as the United States representative to international committees such as the IMO, and other international groups, such as the International Atomic Energy Agency.

j. Recommend, guide, and conduct research and development necessary to establish a technical basis for regulatory projects, policy, instructions, and guidance for which the branch is responsible.

k. Provide technical support to Coast Guard marine boards of investigation and other Headquarters Offices and divisions.

2. Technical Concerns. The Ship Design Branch is organized into two functional sections: Fire Protection, and Safety and Oversight. Branch personnel deal with the technical evaluation of these concerns, identified as follows:

a. Structural fire protection;

b. Firefighting systems;

c. Marine fire investigations;

d. Marine nuclear applications;

e. Human factors engineering;

f. Computer applications;

g. System safety analysis;

5.A.2. h. International Convention for the Safety of Life at Sea (SOLAS) compliance; and

i. Oversight of third-party technical review and inspections.

3. Intragovernmental Relations In Marine Safety.

a. Occupational Safety And Health Administration (OSHA). On 8 March 1983, a Memorandum of Understanding (MOU) was signed by the Coast Guard and OSHA concerning health standards for work places aboard inspected vessels (see the Federal Register of 17 March 1983, p. 11365). The MOU acknowledges that both agencies have statutory authority relating to occupational health in the maritime industry, and that cooperation between them is essential in the area of health standards development. A future MOU will deal with the development of consistent occupational health standards, types of liaison, and review mechanisms.

b. Public Health Service (PHS). The Interstate Travel Sanitation Branch of the PHS is responsible for reviewing plans and performing inspections of all U.S. vessels on interstate and foreign voyages. PHS Publication 393,"Handbook on Sanitation of Vessel Construction," sets forth minimum standards relating to general sanitation and rat-proofing in the construction of vessels. MSC personnel shall be familiar with these standards as they apply to potable water systems and plumbing. In the course of plan review, deficiencies noted in sanitary features shall be called to the attention of the submitter.

c. U.S. Minerals Management Service (MMS).

(1) Introduction. Based on an MOU between the Coast Guard and the U.S. Geological Survey (now the MMS), signed 18 December 1980, formal arrangements between the agencies define clearly the responsibilities for enforcement of the Outer Continental Shelf (OCS) Lands Act, as amended. The MOU specifies certain actions to be taken for fixed and floating offshore structures (see 33 CFR 140.10 for definitions of "fixed" and "floating" facilities).

(2) MMS Actions. The MMS will verify for all OCS facilities site-specific considerations, such as oceanographic, meteorological, geological, and geophysical conditions (including bottom conditions), and the bottom-holding capability of equipment that controls the position of the facility relative to a wellhead or manifold. For all fixed OCS facilities, the MMS will verify:

(a) Structural integrity involving design, fabrication and installation;

(b) General arrangement of drilling, production, and well control systems and equipment; and

5.A.3.C.(2) (c) Modifications and repairs related to structural integrity.

(3) Coast Guard Actions. The Coast Guard will establish for all OCS facilities structural fire protection requirements and access, landings, and emergency escape route requirements. For all floating OCS facilities and vessels engaged in OCS activities, the Coast Guard will establish:

(a) Design, loading, fabrication, and construction requirements;

(b) Stability and buoyancy standards;

(c) Modification and repair requirements related to structural integrity; and

(d) General arrangement standards.

[NOTE: For more detail regarding the Coast Guard*s Outer Continental Shelf Program, see volume II of this manual.]

d. Nuclear Regulatory Commission (NRC). On 4 January 1974, an HOU for the regulation of floating nuclear power plants was signed by the Coast Guard and the Atomic Energy Commission (now the NRC). The MOU identifies the NRC as having primary review and inspection responsibility, and the Coast Guard as providing review input for safety- and technically-based aspects of maritime nuclear power plants. Additionally, the MOU designates the NRC to act as sole point of contact with applicants for construction of such facilities. This MOU has proven effective in conducting an orderly review of the floating nuclear power plants proposed by Offshore Power Systems, Inc. The draft of a similar MOU dealing with nuclear-powered merchant ships has been prepared by the Coast Guard and the NRC. Final agreement, however, pends initiation of a nuclear merchant ship program by the industry.

e. U.S. Navy National Defense Features (NDF) Programs.

(1) Objective. The objective of the NDF Program is to develop merchant ships capable of serving as naval or military auxiliaries in time of war or national emergency, and to provide for the maximum survivability of ships that may be used by the government in nonmilitary wartime roles. The Maritime Administration (MARAD) forwards conceptual and preliminary designs from Construction Differential Subsidy applicants to the Department of the Navy for evaluation. The objective of this early submittal is to embody NDF concepts at the earliest practicable stage prior to submittal of firm plans and specifications. After support missions or functions suitable for the designs have been selected, NDF concepts that would best support these functions are recommended for installation.

5.A.3.e. (2) Standards. Basic NDF standards encompass one-compartment subdivision, hull scantlings, fire prevention and firefighting equipment, fire pump capacities, and boats and lifesaving apparatus that meet MARAD, ABS, and Coast Guard standards. In addition, NDF operating standards encompass operating speeds, shock resistance to damage, additional electrical generating capacity, distilling capacity, nuclear/biological/chemical (NBC) washdown systems, accommodations for military personnel, certain communication facilities, and cargo handling gear. Types of vessels typically identified by the Navy for NDF considerations are break-bulk, container, and roll-on/roll-off (RO/RO) cargo vessels, barge carriers, combination carriers, tankers, integrated tug-barges (ITB's), oil/bulk/ore (OBO) carriers, and liquefied gas tankers.

4. New Design Concepts.

a. Introduction. Plan review of "typical" commercial vessels is normally handled by the MSC. Due to the safety-related problems associated with novel designs and concepts, commandant (G-MTH) has traditionally assumed the responsibility for review of such projects. Guidelines are subsequently provided to the field for future review. This guidance highlights current novel design concepts under review by the Ship Design Branch, and summarizes the policy for newer design types that are reviewed by the MSC.

b. Helicopter Facilities Aboard Commercial Vessels. Helicopter transportation of goods and personnel can be an economically attractive means of logistic support for a vessel while underway. In the U.S., interest in the use of helicopters for such support was initially limited to the offshore oil drilling industry. However, recent activity in other types of marine helicopter operations has increased. Currently, regulations in 46 CFR, Subchapter I-A provide for helicopter facilities on mobile offshore drilling units (MODU's). Navigation and Vessel Inspection Circular (NVIC) 9-81 provides guidance regarding the design, construction, and equipage of helicopter facilities aboard other certificated vessels.

c. Marine Nuclear Power Applications. Previous marine nuclear power applications involved traditional ship designs with nuclear propulsion plants, and the location of nuclear powered electrical generating plants in ship hulls or floating platforms. Concern for, and regulations addressing, potential nuclear energy hazards are the responsibility of the NRC (see subparagraph 5.A.3.d above). Concern for the interface of nuclear energy systems with traditional marine systems and the suitability of the marine structure housing the nuclear systems are Coast Guard responsibilities. The following regulations contain information about Coast Guard requirements for nuclear power components and systems:

(1) 46 CFR 37: Special construction, arrangement, and other provisions for nuclear vessels;

5.A.4.c. (2) 46 CFR 55: Requirements for nuclear power plant components;

(3) 46 CFR 61.25: Periodic tests and inspections of nuclear reactor power plants;

(4) 46 CFR 79: Special construction, arrangement, and other provisions for nuclear vessels; and

(5) 46 CFR 99: Special construction, arrangement, and other provisions for nuclear vessels.

In addition, Chapter VIII of the 1974 International Convention for Safety of Life at Sea (SOLAS) contains regulations for nuclear ships. Attachment 3 to the convention contains recommendations for the safety of nuclear ships.

d. Ocean Thermal Energy Conversion (OTEC) Program. The OTEC concept applies the temperature differences between relatively warm surface water and colder water underneath to run a heat engine and generate electricity. A fundamental advantage of OTEC over other solar energy systems is the constant availability of the resources. The small available temperature difference results in large hardware installations, particularly for the heat exchangers. Like solar energy techniques, however, OTEC requires no fuel except sunlight, so that hardware costs are countered by minimized fuel cost. On 3 August 1980, the OTEC Act of 1980 was signed into law. This Act requires the Coast Guard to prescribe rules for OTEC facilities and plantships for the purpose of promoting the safety of life and property at sea and protecting the marine environment. Regulations implementing the Coast Guard's responsibilities pursuant to the Act became effective 11 May 1983, and are detailed in the Federal Register of 11 April 1983, pp. 15469-15475, and 46 CFR Parts 50, 106, 110, and 174.

B. Fire Protection And Vessel Design.

1. Authority. Broad authority for fire protection regulations for vessels subject to Coast Guard inspection is provided by 46 U.S.C. 3306. This law requires the Coast Guard to maintain regulations for vessels subject to inspection and certification with respect to firefighting equipment, including (but not limited to) the number, type, size, capacity, details of construction, methods of operation, stowage, maintenance, manning, use, testing, and inspecting of such equipment, and drills and exercises necessary to ensure proper functioning and use of such equipment.

2. Program Concerns. One objective of the Office of Merchant Marine Safety is to minimize both the incidence and consequence of shipboard fires: this is pursued in a two-element approach.

a. The first concern is to reduce the quantity and degree of flammable or combustible articles aboard ship. Most vessels carry combustibles in their cargo holds or cargo tanks; combustible furnishings are used within accommodation areas; and flammable fuels are necessary in

5.B.2. a. (cont'd) galleys and machinery spaces. Consequently, the materials of construction for inspected vessels are required to be noncombustible, where applicable. This requirement ensures that the vessel's structure and features do not contribute to the available fuel load, and causes them to be safe from typical ignition sources such as electrical short circuits, lighted tobacco products and matches, and contact with heated surfaces.

b. The second program element is intended to minimize the consequences of shipboard fires by specifying the fire endurance of certain bulkheads and decks. This requirement provides barriers to contain fires, to allow escape of personnel and to provide time for firefighting team to extinguish the fire. A number of different fire extinguishing systems are required by Coast Guard regulations to enable the crew to control and extinguish outbreaks of fire. The degrees of fire endurance required, and the types and numbers of extinguishing systems required, depend on the vessel type. Typically, the most stringent requirements are applied to passenger vessels, because the safety of passengers' lives is of utmost importance. Aboard tank and cargo vessels where only trained crewmembers are present, a great emphasis is also placed upon the vessel and its cargo. This was modified with the coming into force of the first set of amendments to SOLAS 1974 (the 1981 Amendments) on 1 September 1984. Specific bulkhead requirements similar to those for passenger ships will be applicable to cargo vessels and tank ships.

3. Structural Fire Protection Materials. All materials used for shipboard interior construction must be "type approved" by the Survival Systems Branch, Commandant (G-MVI-3). Specifications and tests are documented in 46 CFR, Subchapter Q regulations as follows:

a.	46 CFR 164.006	Deck Coverings
b.	46 CFR 164.007	Structural Insulations
c.	46 CFR 164.008	Bulkhead Panels
d.	46 CFR 164.009	Noncombustible Materials
e.	46 CFR 164.011	Fire Resistant Fabrics (tentative)
f.	46 CFR 164.012	Interior Finish Materials

Further explanation of these materials can be found in NVIC 6-80. Approved materials and manufacturers' addresses are noted in Equipment Lists, Commandant Instruction (COMDTINST) M16714.3, and the equipment card files maintained by all marine inspection units and the MSC.

4. Structural Fire Protection Arrangements. As noted above, the arrangement of a vessel is important for its preservation as well as the safety of the persons aboard. A basic vessel design begins as a steel shell, which is then subdivided by interior bulkheads or joiner work to form functional

5.B.4. (cont'd) spaces, such as staterooms, galleys, lounges, mess areas, and control stations. Containment of a fire within the space of origin is very important and a principle upon which Coast Guard regulations are founded. Escape routes, including passageways and stairtowers, must be incorporated to enable persons to escape from any potential fire areas and to provide ready and direct access to lifeboats. The most important requirement, however, in the design or review of any vessel is to ensure two independent means of escape from all areas where personnel may be present. For areas below the waterline, at least one of the escape paths must be independent of watertight doors (see NVIC 6-80 and the appropriate vessel regulations). It should be remembered that a ship is its own best lifeboat.

5. Fire Extinguishing Systems. The various regulations in Title 46, CPR contain requirements for the type of fire extinguishing systems that must be installed aboard all types of inspected vessels. Universally, a fire main system consisting of pumps, piping, hydrants, hoses, and nozzles must be installed aboard all inspected vessels. The hydrants must be arranged throughout the vessel so that firefighting water is available in all areas. The fire main is the first line of defense for all common shipboard fires and must be maintained for instant use at all times. Engine rooms must be protected by an installed (or fixed) fire extinguishing system. Aboard cargo vessels where a total flooding carbon dioxide system is fitted for the protection of the cargo holds, it is very economical to use the same system for the protection of the engine room. Other common systems include foam, water spray, and Halon 1301. In any case, the applicable vessel regulations must be consulted to determine what type of system is required. Further guidance and explanation can also be found in NVIC 6-72 and NVIC 6-72, CH-1.

6. Portable Fire Extinguishers. Portable and semi-portable extinguishers are required throughout vessels as "first aid" tools to extinguish small, incipient fires. These units are similar in all respects to the extinguishers normally found in buildings. However, the Coast Guard uses a rating system, based upon the unit type and agent fill weight, that is distinctive to the marine environment, Additionally, a heavy-duty mounting bracket is required to secure the extinguishers to the bulkheads due to the vessel's expected motions. The appropriate regulations should be consulted to determine the quantity and rating of extinguishers needed for a given type of vessel. Approved extinguishers are not listed in Equipment Lists because of the extensive number of acceptable models. Such a listing is contained in Underwriters Laboratories, Inc. (UL) pamphlets "Fire Protection Equipment Directory" and "Marine Product Directory." These publications can be ordered from UL, 333 Pfingsten Road, Northbrook, Illinois 60062. All approved extinguishers have a Coast Guard approval number on the UL label. The specific test requirements for approval of fire extinguishers are contained in 46 CFR 162.028. Most extinguishers not having a Coast Guard approval number are not acceptable for marine use. However, under certain conditions UL listed portable and semi-portable extinguishers may be carried as equivalent to Coast Guard approved extinguishers (see NVIC 3-82 for specifics).

5.B.7. Detection Systems. Smoke and fire detectors are required only for spaces aboard passenger vessels as noted in Table 46 CFR 76.05-1(a), cargo spaces aboard RO/RO vessels (noted in the regulations as spaces specially suitable for vehicles), cargo holds aboard any vessel carry ing explosives, and unattended machinery spaces (see NVIC 1-69). With the coming into force of the 1981 Amendments to SOLAS 1974 on I September 1984, smoke detection is required in corridors, stairways and escape routes of cargo vessels, tank vessels and passenger ships. In addition, for passenger ships a fire detection system is required for all accommodation and service spaces, and where considered necessary in control stations.

8. Chemical Carriers. These vessels are similar to tank vessels in design. However, because they may carry a variety of chemicals, they present unique fire protection problems. A special deck foam system that caters to higher rates of application required for certain chemicals as well as polar solvents must be provided for these vessels. The arrangement of the pumps, piping, and discharge devices is similar to that for a foam system on a conventional tanker, as described in NVIC 6-72. The type and quantity of foam concentrate provided is selected only after careful evaluation of the cargoes to be carried. Care-must be taken to prevent loading of cargoes that would exceed the foam system*s capabilities. Normally, these foam systems are reviewed and approved in close coordination with Commandant (G-HVI-3). Attention is drawn to NVIC 11-82 dealing with polar foam systems.

9. Liquefied Natural Gas (LMG) Carriers. These vessels carry flammable liquefied gas, primarily methane, at approximately -165C. Under exposure to fire, the gas could rapidly vaporize, creating a very severe fire. In addition, LNG flames produce a heat flux much higher than burning hydrocarbons, thereby creating a radiant heat hazard. Because of this, water spray protection of all superstructures that face the cargo area is required. The water spray systems are designed and reviewed in accordance with 46 CFR 154.1105 through 154.1135. To extinguish the most probable LNG fires (i.e., from flange leaks, broken pipes, or minor spills) a fixed dry chemical extinguishing system is provided. These are different from the typical marine unit because they have a 45-second discharge time, and usually have several remotely connected hose reels and high-capacity monitors. The systems are designed to meet the requirements of 46 CFR 154.1140- 154.1170. The type approval of these dry chemical systems is provided by Commandant (G-MVI-3).

10. Mobile Offshore Drilling Units (MODU's). These units are regulated under 46 CFR, Subchapter I-A. From a fire protection standpoint, they are protected much the same as a cargo vessel. Structural materials and extinguishing systems are the typical shipboard types listed in Equipment Lists, except that foam systems on MODU's may utilize aqueous film forming foam (AFFF) type concentrates, if specifically approved by the Commandant. Chapter 9 of the IMO Code for the Construction and Equipment of Mobile Offshore Drilling Units provides additional guidance relative to fire safety considerations aboard these vessels.

5.B.11. Vessels Carrying Portable Tanks. Under 49 CFR 176.315, a Type B-V foam or dry chemical semi-portable extinguisher, or an approved foam nozzle with pickup tube and 10 gallons of foam liquid concentrate, is required for every 21,000 U.S. gallons of any flammable or combustible liquid carried in portable tanks. Where a large number of portable tanks are routinely carried aboard, an installed system may be substituted if approved by the Commandant.

12. Hovercraft And Hydrofoils Used As Passenger Vessels.

a. General Considerations. To date, requirements for structural fire protection aboard hovercraft and hydrofoils have been determined by applicable sections of 46 CFR, Subchapters H or T. The emerging interest in the U.S. in such craft has brought about a reexamination of these requirements relative to the concepts, total arrangements and operation of such vessels. Traditional fire protection measures for passenger vessels have been based on the following principles:

(1) Division of the ship into main vertical zones by thermal and structural boundaries;

(2) Separation of accommodation spaces from the remainder of the ship by thermal and structural boundaries;

(3) Restricted use of combustible materials;

(4) Detection of any fire in the zone of origin;

(5) Containment and extinction of any fire in the space of origin;

(6) Protection of means of escape or access for firefighting; and

(7) Ready availability of fire extinguishing appliances.

These principles, while generally applicable to small vessels, are more appropriate in a total sense to larger, multi-cellular steel vessels.

b. Calculating Evacuation Times. If the vessel were configured so that all passengers were located on a single deck, structural fire protection measures would be required only between the machinery space and the passenger area (the purpose being to isolate a hazardous area from the passengers and to allow time for orderly evacuation if required). Assuming that evacuation is required, it would take a finite period of time. This evacuation time has been considered in the recent IMO draft Code for Novel Types of Craft. In this code, structural fire protection between high hazard areas and passenger areas is required to meet the following formula:

(1) Evacuation time = E (minutes);

5.B.12.b. (2) Insulation Required = S (Based on times from the standard fire test; and

(3) S = (7 minutes + (3 x E)) or 30 minutes, whichever is greater. For example, if the evacuation time is 5 minutes, the requirement would be: S = (7 + (3 x 5))= 22 minutes. The greater length of time, 30 minutes, would govern in this example.

As evacuation time is considered, logic may be taken one step further. When a two-cell vessel can be completely evacuated of crew and passengers in the time calculated for evacuation of a single compartment, structural fire protection measures between decks may be kept to a minimum.

c. On Board Analysis Of Evacuation Time. Evacuation time must be considered according to a vessel's particular constraints. The need for evacuation is predicated on some occurrence that makes the vessel no longer tenable (e.g., collision with another vessel or with a fixed or floating object, internal fire, or external fire). It should be assumed that in such an event one available exit would be blocked; in such case, the evacuation time becomes critical. Evacuation time should be measured from the declaration of an emergency until the point at which the vessel is actually abandoned, including:

(1) Declaration of an emergency;

(2) Orders to abandon ship;

(3) Marshalling of crew and passengers to debarkation areas;

(4) Debarkation underway; and

(5) Vessel abandoned (debarkation completed).

(6) Guidelines concerning on board measurements of evacuation times should be as follows:

(a) Overcrowding of life rafts shall not be permitted;

(b) One exit shall be blocked and announced so prior to evacuation time measurement; and

(c) A representative mix of individuals shall be used in the evacuation.

d. Acceptable Materials. The following materials comply with low flame spread and smoke emission characteristics recommended by Chapter 4 of IMO Resolution A.373 (X):

(1) Seat cushions must pass the American Society for Testing Materials (ASTM) E 162-76 Radiant Panel Test, with a Flame Propagation Index not exceeding 25. No flaming runnings or

5.B.12.d. (1) (cont'd) drippings of samples may occur during testing. Wire mesh screening must be used, in accordance with Section 5.9.2 of the test procedures. A 6-inch long pilot flame must be provided. The burner tip must be situated 1-1/4 inches beyond the frame to prevent extinguishment. Aluminum foil must be used as wrapping around the back sides of the specimen. By additional test or analysis, the fire resistant properties of seat cushion material must be shown to be an integral part of the material.

(2) Interior textiles must be tested in accordance with 14 CFR 25, Appendix F. The following criteria apply in these tests:

(a) The average flame time after removal of the flame source must not exceed 10 seconds;

(b) Burn length must not exceed 2.5 inches; and

(c) Drippings from the test specimen must not flame.

Fabrics that must be machine-washed or dry-cleaned must meet these criteria after leaching in accordance with Federal Test Method Standard 191B, Method 5830, or after dry cleaning in accordance with AATCC-861968. Fabrics that cannot be machine-washed or dry-cleaned must meet these criteria after being cleaned as recommended by the manufacturer.

(3) Carpeting must be tested with its padding if the latter is to be used, and must be capable of passing the National Bureau of Standards Flooring Radiant Panel Test (NFPA 253-1978) with a minimum critical radiant flux of 0.6 watts/cm2.

(4) Interior textiles and carpeting must also be tested for smoke emission in accordance with National Fire Protection Association (NFPA) 258-1976, "Test Method for Measuring the Smoke Generation by Solid Materials." When conducting this test, the Optical Density (D) in both flaming and nonflaming modes must be determined; it may not exceed 100 until at least 4 minutes-after the start of the test.

13. Tank Barges. The basic structural fire protection requirement for tank barges is that the entire cargo deck, including hatch covers, ullage openings, etc., be of steel or iron construction. Aboard tank barges, the use of aluminum hatch covers for dedicated wing and rake voids is acceptable.

C. Hull Arrangements And Fittings.

1. Access And Egress Routes.

a. Rails And Guards Aboard Unmanned Deck Cargo Barges For Ocean Service. The rail and guard requirements of 46 CFR 92.25 do not apply to unmanned deck cargo barges for ocean service. Like unmanned tank

5.C.1. a. (cont'd) barges under 46 CFR 32.01-10(a), these vessels are exempt from the rail and guard requirements.

b. Use Of Air Ports Aboard Manned Tank Barges. Aboard a manned tank barge with six persons or less aboard, air ports shall be accepted as a second means of escape, provided:

(1) There is a minimum of one air port for each two persons and

(2) The accessibility and arrangement is suitable to the officer in charge, marine inspection (OCMI). This includes hand-holds over the air poet on each side of the bulkhead as well as rungs to reach the air port. [NOTE: A vertical ladder with a scuttle is also acceptable. If there are more than six persons aboard, air ports are not an acceptable means of escape, and a suitable means of escape shall be provided.]

c. Vertical Ladders. To provide adequate safety for shipboard personnel, the specifications for vertical ladders set forth in American National Standards Institute (ANSI) 14.3 are followed. These specifications are found in 46 CPR 108.160.

d. Vertical Engineroom Escape Ladders Aboard Offshore Supply Vessels (OSV's). Most early OSV designs had stacks aft and outboard; this provided for port and starboard stairways within the stack housing, with doors opening to the freeboard deck. More recent designs have placed stacks forward, thus eliminating an accommodating structure for a stairway and door on the freeboard deck. Aboard OSV's where the installation of a watertight door and stairway for emergency egress from the engine room is impractical (i.e., no deckhouse or stack structure exists over the engine room), the following guidelines should be applied:

(1) A vertical ladder/deck scuttle is acceptable as a secondary means of escape from the engine room. However, the primary means of escape shall be a stairway. These two means of escape shall be located as remote from each other as practicable.

(2) Deck scuttles shall be fitted with a coaming at least 23.5 inches in height, in accordance with 46 CFR 42.15-40(c). The coaming shall be properly framed and of ample strength as per 46 CFR 42.35(a).

(3) The scuttle should not be located where stowed deck cargo would interfere with its use.

(4) The scuttle should be fitted with a quick-acting release hold-back to hold the scuttle in the open position.

(5) An escape route from the engine room to the after steering gear compartment (from there via a deck scuttle to the freeboard deck) is not acceptable.

5.C.1.d. (6) The scuttle should be considered a point of downflooding for calculations under the Towing Vessel Towline Pull Stability Criteria (see chapter 6 of this volume).

[NOTE: See also NVIC 6-80, "Guide to Structural Fire Protection Aboard Merchant Vessels," for a general discussion of means of escape.]

e. Inspection Clearances For Independent Or Segregated Cargo Tanks. The following regulations deal with inspection clearances around independent or segregated cargo tanks:

(1)	46 CFR 32.60-30(a)	Tank vessels
(2)	46 CFR 38.05-10(a)	Liquefied gas carriers
(3)	46 CFR 92.25-20(a)	Cargo and miscellaneous vessels
(4)	46 CFR 151.15-3(d)(2)	Unmanned barges carry ing certain bulk dangerous cargoes

The intent of these regulations is to restrict the reduction of clearances of less than 15 inches to very limited areas, such as in way of frames or other structural members. The phrase "shall not normally be less than 15 inches" shall not be construed to allow a general reduction of clearance below 15 inches over a significant length of the tank because of other design considerations. Fifteen inches is considered the minimum clearance to permit adequate inspection of the tank and barge structure. This standard has also been adopted by the Canadian Board of Steamship Inspection. Under "adequate clearance clauses" or "equivalency clauses," a clearance of 15 inches may be accepted as the minimum inspection clearance necessary. (NOTE: These requirements are separate from access requirements in 46 CFR 153 and 154 for independent or segregated-type tanks.]

f. Rigging Of Lifelines Between Tank Vessel Deckhouses. Under 46 CFR 32.01-5, lifelines must be rigged on tankers between deckhouses more than 150 feet apart, unless a raised bridge is installed. Questions have been raised about the applicability of this requirement to a tanker having all accommodations in an after deckhouse, with smaller deckhouses forward. The requirement appears to have been directed to those vessels having two or more deckhouses that contain accommodations. In such cases, continuous access is necessary, as messing facilities are generally located in only one deckhouse. When all accommodations are located in one deckhouse, there is no need for continuous access to other deckhouses used for lockers or workshops under all weather conditions. The Commandant has interpreted the requirement in 46 CFR 32.01-5 to apply only to tankers having more than one deckhouse that contains accommodation spaces or that is normally manned continuously.

5.C.2. General Arrangements.

a. Private And Semi-Private Washrooms And Toilet Rooms. The following regulations specify arrangements for washrooms and toilet rooms, except where private or semi-private facilities are provided:

(1)	46 CFE 32.40-1(b)	Tank vessels
(2)	46 CFR 72.20-25(a)	Passenger vessels
(3)	46 CFR 92.20-25(c)	Cargo and miscellaneous vessels
(4)	46 CFR 108.205	MODU's
(5)	46 CFR 190.20-25(a)	Oceanographic research vessels

Washrooms and toilet rooms consisting of a wash basin, toilet and shower/bath for every eight crewmembers shall be provided, except where the crew is provided private or semi-private facilities. Berthing accommodations with semi-private facilities usually have wash basins in the sleeping area and the shower and toilet in a separate room between two adjacent berthing areas. This semi-private arrangement can be used for up to six crewmembers (see 46 CFR, Subchapter u), although normally no more than four persons will be berthed in such quarters. Toilet areas should be partitioned off from the washroom or shower room when it is intended that more than one person may use the facilities at a time.

b. Radio Room Locations. Federal Communications Commission (FCC) regulations require radio rooms to be located "as high as possible." This requirement should be considered in monitoring new construction. During alterations that involve relocating the radio rooms to a lower deck, the FCC shall be notified and the owner alerted to the significance of the proposed alteration. If the room has no direct access to the open deck, two means of escape from or access to this room shall be provided (see the 1981 Amendments to SOLAS 74, Chapter II-2, Reg. 28.1.3).

c. Tinted Windows In Navigating Spaces. Tests have shown that the use of colored or tinted glass in navigating spaces can reduce the recognition of navigation lights, modify chromaticity, and may therefore create hazardous conditions in nighttime maneuvering. Department of Transportation Report SE-DOT-1685 stated the results of an analytical and experimental study to determine the effects of windshields and tinted glass on the probability of detecting objects and on the degradation of seeing distance after dark. The study showed that at twilight and nighttime illumination levels (in the range of .0001 to 10 footlamberts), the rate of visual degradation is slow for glass with transmittances greater than 79 percent. For glass with transmittances less than 79 percent, the rate of visual degradation increases significantly more rapidly. Therefore, the range of optimum performance for pilothouse windows, independent of

5.C.2. c. (cont'd) the observer's visual acuity, is a transmittance range between 80 and 100 percent. Consequently, the degradation in bridge visibility caused by using windows with a transmittance of less than 80 percent aboard any vessel should be corrected when considered feasible By the cognizant OCMI.

d. Use Of Tanks, Voids, And Cofferdams. Vessels certificated as passenger, cargo, or miscellaneous vessels may carry limited quantities of flammable or combustible liquid cargo in bulk in accordance with 46 CFR 30.01-5 and 90.05-35. The principal purpose or use of such vessels may not be for the carriage of such cargo (see volume II of this manual for further policy).

e. Fuel Lines Passing Through Accommodation Spaces. A fuel oil line that passes through an accommodation or public space may create a potentially hazardous situation in the event of a line leak or rupture, especially if the fuel oil is under pressure. The following conditions should be met when it is necessary for a fuel oil line to pass through an accommodation or other public space:

(1) The line is used only as a fuel oil fill;

(2) The pressure in the line is very low compared to the allowable pipe pressure; and

(3) The fuel line is not hidden behind ceilings or linings.

f. Location Of Emergency Sources Of Power. The following arrangements are equally acceptable for the location of a space contains an emergency source of power in accordance with 46 CFR 112.O5-5(e).

(1) The space containing the emergency source of power is separated from a Category A machinery space By another space; or

(2) The space containing the emergency source of power and a Category A space share a contiguous boundary, and that Boundary has an A-60 fire classification.

3. Cargo- And Weight-Handling Gear. The provisions of 46 CFR 91.37 control the inspection and testing of gear used in the loading and unloading of dry cargo, including masts, stays, booms, winches, cranes, elevators, conveyors, and standing and running rigging. While this coverage is rather broad, there are several particular requirements:

a. Weight-handling gear (i.e., that used for cargo hoses and ship stores) is not inspected by the Coast Guard, with the exception of handling cranes used aboard MODU's. The regulations covering this gear are contained in 46 CFR 107.258, 107.259, 107.260 and 107.309.

5.C.3. b. The American Petroleum Institute's (API) Specification for Offshore Cranes (API Specification 2C) details the standards for pedestal mounted revolving cranes on MODU's used for transfer of materials or personnel to or from vessels. The second edition of this specification, dated February 1972, has been incorporated by reference in 46 CFR 107.309. Designers are encouraged to use the current edition dated March 1983.

c. The weight gear and rigging of special design vessels used in dredging, piledriving, mineral drilling, and construction work are generally exempted from inspection by 46 CFR 91.37-3. When such gear is used to move cargo (e.g., derrick barges rigged for heavy lifts, barge-mounted cranes used to transfer cargo from shoreside to an alongside vessel, and cranes mounted on deck cargo barges for loading the barge), it is subject to the provisions of 46 CFR 91.37 even though it is also used in construction activities.

d. The requirements for weight handling gear used aboard oceanographic research vessels are contained in 46 CFR 189.35.

e. Under 46 CFR 197.330(a)(3), a pressure vessel for human occupancy (PVHO) used in commercial diving operations must have lifting equipment attached that is capable of returning the occupied PVHO, when fully flooded, to the dive (launch) location. However, the regulations do not specify <u>how</u> to satisfy this requirement. As a policy matter, the proof test provided by 46 CFR 91.37-40 and the 'fail safe" requirements of 46 CFR 58.30 have been used to assess satisfactory compliance of PVHO lifting equipment in accordance with 46 CFR 197.330(a)(3).

[NOTE: See NVIC 8-84, "Recommendations for the Submittal of Merchant Vessel Plans and Specifications," for guidance for efficient plan submittal where plan review of cargo gear or cranes is required.]

D. <u>Oversight Of Third-Party Inspections</u>.

1. <u>Inspections Conducted By The American Bureau Of Shipping (ABS)</u>;

a. <u>Introduction</u>. ABS is a private, nonprofit organization that classifies vessels of various national registries and performs other functions required by international law on behalf of the U.S., as well as several foreign countries. The majority of the vessels classed by ABS are of foreign registry. Some countries, such as Liberia and Panama, that do not have maritime safety agencies such as the Coast Guard use ABS as their official agency for issuance of various shipping documents and safety certificates. Insurance underwriters also accept ABS classification as evidence of the seaworthiness of a vessel. The following laws give ABS specific authority in certain areas for U.S. vessels:

5.D.1. a. (cont'd)

Laws	Subject
46 App. U.S.C. 86d	Load Lines, General
46 App. U.S.C. 88b	Load Lines, Coastwise
46 U.S.C. 3316	Classification, General; Plan Review and Inspection

b. Coast Guard Participation On ABS Committees. Technical standards for ship structures were published by ABS before the Coast Guard dealt with hull structure approval. As the Coast Guard became involved in vessel inspection, it was convenient and adequate to reference ABS Rules as acceptable standards for Coast Guard approval. As the Coast Guard became more involved in plan review and ABS Rules became technically more comprehensive and complex, it became necessary for the two organizations to work closely together. Coast Guard participation in ABS committees has provided important understanding of the basis for particular standards, and has enabled automatic acceptance of new rules as they are published by ABS. The Coast Guard participates on the following ABS committees:

(1) Board of Managers;

(2) Classification Committee;

(3) The Technical Committee;

(4) Committee on Naval Architecture;

(5) Committee on Engineering;

(6) Great Lakes Technical Committee;

(7) Special Committee on Cargo Containers;

(8) Special Committee on Electrical Engineering;

(9) Special Committee on Materials;

(10) Special Committee on Mobile Offshore Drilling Units;

(11) Special Committee on Ocean Thermal Energy Conversion;

(12) Special Committee on Offshore Installations;

(13) Special Committee on Ship Operations;

(14) Special Committee on Underwater Systems and Vehicles; and

(15) Special Committee on Welding.

5.D.1. c. ABS Publications. References to "ABS Rules" in the regulations include the specific editions to be used in determining structural standards for vessels. Most of the ABS Rules are updated infrequently. However, the Rules for Building and Classing Steel Vessels, used for oceangoing ships over 200 feet in length, are revised annually. Generally, the latest edition at the time vessel construction begins should be used for plan approval. Other ABS publications include:

(1) Rules for Building and Classing Aluminum Vessels (1975);

(2) Rules for Building and Classing Steel Vessels for Service on Rivers and Intracoastal Waterways (1980);

(3) Rules for Building and Classing Steel Vessels under 61 Meters (200 Feet) in Length (1973);

(4) Rules for Building and Classing Mobile Offshore Drilling Units (1980);

(5) Rules for Building and Classing Offshore Installations - Part I - Structures (1983);

(6) Rules for Building and Classing Single-Point Moorings (1975);

(7) Rules for Building and Classing Steel Barges for Offshore Service (1973);

(8) Rules for Nondestructive Inspection of Hull Welds (1975);

(9) Rules for Building and Classing Bulk Carriers for Service on the Great Lakes (1978); and

(10) Rules for Building and Classing Reinforced Plastic Vessels (1978).

The MSC should have a copy of each set of rules. There are also a number of other guidelines and technical publications available from ABS. These are usually listed in appendices to the rules listed above, and may be ordered directly from ABS, 65 Broadway, New York, NY 10006.

d. ABS Circulars. ABS uses Circular Letters to disseminate technical and procedural information to its field surveyors and representatives. The MSC and Commandant (G-MTH) has an updated file of ABS Circulars. The circulars are considered proprietary to ABS and may not be released outside the Coast Guard by any Coast Guard employee. For Coast Guard use, ABS Circulars are provided for information purposes only, and their content may not be referenced as Coast Guard requirements (see volume I of this manual).

5.D.2. Memorandums Of Understanding (MOU's).

a. CG/ABS MOU I. In an effort to improve plan review efficiency, the Coast Guard and ABS signed an MOU on 9 June 1981. This agreement called for Coast Guard acceptance of ABS approvals and inspections on ABS classed vessels. NVIC 7-81, dated 23 July 1981, detailed the MOU and its implementing instructions.

b. CG/ABS MOU II. The cooperation efforts of the Coast Guard and ABS were broadened by a second MOU, signed on 27 April 1982. NVIC 10-82, dated 18 May 1982, incorporated the new agreement provisions with the old circular guidelines, superseding NVIC 7-81 in the process. Change 1 to NVIC 10-82 was published 30 April 1985 and is applicable for vessels contracted after that date.

3. NVIC 10-82. This circular outlines the plan review and inspection procedures for "new" U.S. vessels under construction that will be certificated by the Coast Guard and classed by ABS. The circular delineates the reviews and inspections to be conducted specifically by the Coast Guard or by ABS, and those where the responsibility is to be shared. Listings of the areas of involvement are found in Enclosure (1) to the NVIC; Enclosure (2) provides instructions for implementation.

4. Coast Guard Oversight Of ABS Activities.

a. Introduction. With MOU II and NVIC 10-82 now in place, it is necessary for the Coast Guard to have an active oversight program monitoring activities that ABS performs on its behalf, to ensure that marine laws and regulations are properly applied by ABS. Such an oversight program was addressed by both the MOU and NVIC 10-82.

b. Objectives Of Oversight. The objective of the oversight program is to ensure that actions by ABS on behalf of the Coast Guard are identical to those that would be taken by the Coast Guard itself. This requires the Coast Guard to:

(1) Unify the plan review and inspection functions of Coast Guard field technical and inspection offices, and minimize localized divergences from a uniform application of Coast Guard regulations and policies.

(2) Document various policies through the Marine Safety Manual (MSM), NVIC's, the Plan Review Guide and other media that are available to all Coast Guard and ABS technical and inspection staffs.

(3) Provide ABS with policies, interpretations, and instructions necessary to apply vessel inspection laws, regulations, and international agreements properly and uniformly.

(4) Monitor ABS activities to ensure that the laws, regulations, and agreements are properly applied to new construction and major modifications of U.S. flag vessels.

5.D.4. c. Oversight Program. The facets of the Coast Guard's inspection oversight program are indicated below. It is understood that the program must be dynamic and must be adapted to address changing areas of emphasis as the ABS takes an increasingly important role and gains experience in performing vessel inspections and plan review. Commandant (G-MTH-4) will initiate and coordinate the goals of this program.

(1) Unify The Plan Review And Inspection Functions Of Various Coast Guard Field Units. This is an ongoing responsibility of the Office of Merchant Marine Safety, and is presently being accomplished through:

(a) Submittal of correspondence files of the MSC for review by Commandant (G-MTH) staff, industry appeals of MSC plan review actions, and visits by Commandant (G-MTH) staff to the MSC.

(b) Unifying the inspection functions of the various inspection offices will be the task of Commandant (G-MVI). However, the Ship Design Branch will coordinate those areas where inspection functions impact upon technical functions.

(2) Review Present Plan Review And Inspection Policies And Their Dissemination. For the past several years, major efforts have been made to consolidate these policies and procedures in the MSM or in NVIC's, as appropriate. The Ship Design Branch will review the efficiency of these efforts and determine what remains to be incorporated, rewritten, or discarded. This branch will review the various policies and instructions that remain effective, and decide which, if any, format of dissemination is appropriate.

(3) Provide ABS With Policies, Interpretations, And Instructions. ABS has access to the MSM, NVIC's, Policy File Memorandums, Merchant Marine Technical (MMT) Notes, applicable Commandant Instructions, and other information necessary to conduct day-to-day plan review appropriately. Commandant (G-MTH) will continue to:

(a) Ensure that the information provided to ABS is kept up to date and that new policy is passed to ABS when developed;

(b) Provide ABS with an appropriate load line regulation review guide;

(c) Provide ABS with an accurate regulation reference listing to supplement NVIC 10-82. This should detail the specific regulations that ABB will apply for technical review and inspection functions performed on behalf of the Coast Guard, and those regulations for which ABS and the Coast Guard have partial or joint responsibilities; and

5.D.4.c.(3) (d) Meet with ARS technical staff on a regular basis to formulate additional information they might require to properly apply U.S. laws, regulations, and international treaties on behalf of the Coast Guard, as the Coast Guard would itself perform.

(4) Monitor ABS Activities. This is a very important part of the oversight program, and includes:

(a) Developing an active plan review and inspection oversight program. It is envisioned that the program will provide positive direction to OCMI's, to accomplish an ongoing oversight review of those activities that ABS performs on the Coast Guard's behalf. The program will be a formalized program adapted to the requirements of each local inspection area.

(b) Ensure that OCMI's and ABS surveyors and principal surveyors have active and open communication to resolve inspection requirements before conflicts between intent and execution become problems, and before vessels are delivered.

(c) Develop active and open communication between the MSC, Commandant (G-MTH), and ABS technical offices.

(d) Review all ABS plan review and inspection circulars for content, policy, and interpretations, where they might impact on those functions that ABS performs on behalf of the Coast Guard.

(e) Review all ABS Rules changes and provide feedback to ABS where necessary.

(f) Consider the value of Commandant (G-MTH) technical staff or the MSC staff accompanying marine inspectors during final inspections of selected vessels, and institute such activities as deemed appropriate.

d. Oversight Of Other Classification Societies. Although ABS is the most common classification society dealt with by the Coast Guard, and the only one for which there is a formal agreement, working relationships with other societies have been established. Some of these classification societies are also actively pursuing the same type of arrangement that the Coast Guard has with ABS. To date, certain of these classification societies have been authorized to conduct certain specific functions for the Coast Guard, such as load line assignment, on a case-by-case basis at the ship owner's request. The Coast Guard has begun a rulemaking procedure (CGD 85-019) to define "similar U.S. classification societies," as used in 46 U.S.C. 3316, and establish procedures for these societies to seek and be granted authority to act on behalf of the Coast Guard. (See ANPRM published in the Federal Register 3 October 1985.)

5.E. Controllability In Vessel Design.

1. Bridge Design And Layout. On a modern vessel, most design considerations are fixed by the naval architect or marine engineer, or by physical constraints. Frequently, bridge design is left to the owner or prospective master of the vessel. This design usually reflects personal opinions and preferences; however, it often does not take into account the best placement of equipment, the service requirements of equipment, or other necessary considerations. Future vessel bridge designs will be arranged based increasingly on human factor design criteria. These criteria will consider the design and layout of the total navigation space, based on recognized human factors, and realistic task performance organization, and varying external operational conditions and internal manning conditions.

2. Visibility From The Bridge.

   a. Introduction. A significant aspect of a poorly designed bridge can be inadequate navigational visibility, which interferes with the master's or pilot's ability to identify their surroundings. Early recognition of this potential problem during plan review is the best approach to ensure adequate visibility. The Coast Guard has not formulated or published regulations that have criteria for bridge visibility. However, the IMO Subcommittee on Safety of Navigation is actively pursuing a visibility standards project. Until such time as criteria are promulgated in the regulations, plan reviewers can assess navigational bridge visibility in one of two general ways.

   b. Review Using Recognized Standards. Various organizations, such as pilot associations, IMO, and MARAD have circulated standards, guidelines, and recommendations concerning navigation bridge visibility. Such materials, if sponsored by an organization that is generally recognized by the American maritime community, are evidence of what is considered adequate visibility in marine practice. Therefore, ships with visibility characteristics that agree with the principles expressed in these materials may be considered to have adequate visibility. To use this approach, the person seeking review must clearly identify the ship's visibility characteristics and the standard, guideline, or recommendation on which they are based.

   c. Review Using Coast Guard Guidelines. If the person seeking review does not identify any basis for the adequate visibility of the ship, a review may be conducted using the Coast Guard guidelines listed below. These guidelines are based on the characteristics of existing ships with adequate visibility. [NOTE: An area where a visibility restriction, typically due to ship structure or cargo, obscures visibility for an arc of more than 10 degrees when viewed from the centerline of the navigation bridge is considered a blind zone. An area where a visibility restriction, typically due to masts, kingposts, cranes or cargo gear, obscures visibility for an arc of 10 degrees or less when viewed from the centerline of the navigation bridge is considered a blind sector.]

5.E.2.c. (1) Under normal conditions of loading, no obstruction as seen from the centerline of the navigation bridge should produce a blind zone greater than 2.0 times the length of the ship (length overall) forward of the bow.

(2) The aggregate of the blind sectors caused by masts, cargo gear, and other similar obstructions forward of the beam should not exceed 20 degrees when viewed from the centerline of the navigation bridge. The clear sectors between adjacent blind sectors should be no less than 5 degrees.

(3) Bridge wings should extend as close to the sides of the ship as practicable.

d. Alternate Evaluation Of Blind Zones.

(1) Viewing Points. The Coast Guard has accepted an alternate, although more complex, method of assessing a ship's blind zone from the navigating bridge. Three views from the navigational bridge level, at a position 1.6 meters above the deck (height of eye), are chosen. These views should include:

(a) The ship's centerline;

(b) The wheelhouse window, where the intersection of the blind zone and extension of the ship'a centerline minimize the ship's centerline projected in the blind zone; and

(c) The wing of the navigating deck, where the intersection of the blind zone and extension of the ship's centerline minimize the ship's centerline in the blind zone.

(2) Blind Zone Limits. The recommended limits of visibility for the three views in terms of the ship's length between perpendiculars (L) and breadth (B) are as follows. [NOTE: Length Between perpendiculars and the forward perpendicular are used as convenient reference points. The coefficients of L and B-in the guidelines take this into account.]

(a) From The Ship's Centerline (Viewing Point (a) Above).
(i) The maximum forward extent of the blind zone from the forward perpendicular is 3.5L; and
(ii) The maximum width of the blind zone at any point forward of the bow is 2B.

(b) From The Wheelhouse Window (Viewing Point (b) Above).
(i) The maximum length of the blind zone at the intersection of the ship's centerline is 2.JL; and

5.E.2.d.(2)(b) (ii) The maximum width of the blind zone at any point forward of the bow is 2B.

(c) From The Bridge Wing (Viewing Point (c) Above).

(i) The maximum length of the blind zone at the intersection of the ship's centerline is L; and

(ii) The maximum width of the blind zone at any distance from the bow is 2.3B.

e. Navigation Visibility On Pushed Barges. An inspected barge with visibility obstructions may be unsafe to navigate when pushed by a tug secured in a notch. The visibility guidance in subparagraphs 5.E.2.b, c, and d above is also applicable to tug-barge combinations when the tug is pushing the barge. Barges with pushing notches aft and large structures or machinery arrangements forward, should be cause for suspecting that visibility problems may prevent the barge from operating with some tugs. If this is noted during plan review, the OCMI and owner or builder can address the problem during the construction phase. A visibility problem which is not corrected in the design and construction phase may be cause for the OCMI to place operating restrictions on the barge.

3. Human/Vessel Interface. Improvements in the human/vessel interface appear to have the greatest potential for significantly reducing accidents, yet there has been little tangible progress in this area. The marine industry has been looking more closely at this aspect of vessel design and human performance. Full-scale bridge simulators already exist, but do not presently offer much in the way of training for bridge teams. How do human factors impact the Coast Guard's marine safety programs, in particular, merchant marine technical concerns? Vessel controllability is of prime importance to the Ship Design Branch, but it may be years before the full benefit from human factors work now underway is realized. It is possible that future plan approval may include a review of the navigation bridge based on automated design standards, in much the same way as engine room automation is now considered.

MARINE SAFETY MANUAL

CHAPTER 6. SHIP STABILITY, SUBDIVISION, STRUCTURES, WELDING, LOAD LINES, AND MANEUVERABILITY

CONTENTS

SECTION		PAGE
6.A.	General	6-1
6.A.1.	Scope Of Responsibility	6-1
6.A.2.	Regulations And Instructions	6-1
6.A.2.a.	Subdivision And Stability Regulations	6-1
6.A.2.b.	Structural Regulations	6-2
6.A.2.c.	Instructions	6-2
6.A.3.	Format Of This Chapter	6-4
6.A.4.	Research And Technical Papers	6-5
6.B.	Stability-Related Drawings And Calculations (46 CFR 170-174)	6-10
6.B.1.	Lines Drawings (46 CFR 170.075)	6-10
6.B.2.	Curves Of Form (46 CFR 170.075)	6-11
6.B.3.	Cross Curves (46 CFR 170.075)	6-12
6.B.4.	Weather Criterion (46 CFR 170.170)	6-12
6.B.5.	Free Surface Calculations (46 CFR 170, Subpart I)	6-13
6.B.6.	Draft Mark Locations (46 CFR 170.075)	6-15
6.B.7.	Subdivision And Damage Stability Calculations	6-15
6.B.7.a.	Scope Of Submittal	6-15
6.B.7.b.	Righting Arms	6-15
6.B.7.c.	Tonnage Openings	6-15
6.C.	Stability Letters And Trim And Stability Booklets (46 CFR 170, Subpart D)	6-15
6.C.1.	Issuance Of Stability Letters	6-15
6.C.1.a.	Officer In Charge, Marine Inspection (OCHI) Actions	6-16
6.C.1.b.	MSC Actions	6-16
6.C.1.b.(1)	If The Vessel Is Inspected And Load Lined	6-16
6.C.1.b.(2)	If The Vessel Is Inspected But Not Load Lined	6-16
6.C.1.b.(3)	If The Vessel Is Load Lined But Not Inspected	6-16
6.C.1.b.(4)	If The Loading Restrictions Are Brief (i.e., 25 Words Or Less)	6-16
6.C.1.b.(5)	Standard Items To Include All Stability Letters Or Booklets	6-17
6.C.1.c.	Actions Of Assigning Authorities	6-17
6.C.1.d.	Additional Provisions	6-17
6.C.2.	Temporary Stability Letters	6-17
6.C.3.	Computers To Calculate Stability On Board	6-18
6.C.4.	Capabilities Of Operational Personnel And Stability Guidance	6-18
6.D.	Stability Tests (46 CFR 170, Subpart F)	6-18
6.D.1.	Inclining Experiments	6-18
6.D.1.a.	Introduction	6-18

CONTENTS

SECTION		PAGE
6.D.1.b.	Coast Guard Representation	6-19
6.D.1.c.	ABS Representation	6-19
6.D.1.d.	The Use Of Water To Produce The Inclining Moment	6-19
6.D.1.e.	Precautions For MODU Inclinings	6-20
6.D.1.f.	Shifting Of Weights On MODU's	6-20
6.D.1.g.	Inclinings Of Column Stabilized Units	6-21
6.D.2.	"Sister Vessels"	6-22
6.D.2.a	Determination Of Sister Vessel Status	6-22
6.D.2.b	Responsibility For Conducting A Deadweight Survey	6-23
6.D.2.c	Deadweight Survey Procedures	6-23
6.D.2.c.(1)	General Condition Of The Vessel	6-23
6.D.2.c.(2)	Tankage	6-24
6.D.2.c.(3)	List And Trim	6-24
6.D.2.c.(4)	Mooring Arrangements	6-24
6.D.2.c.(5)	Weather	6-24
6.D.2.c.(6)	Conducting The Survey	6-25
6.D.3.	Simplified Stability Tests For Small Passenger Vessels (46 CFR 171.030)	6-26
6.D.3.a.	General	6-26
6.D.3.b.	Pontoon-Type Vessels	6-26
6.D.3.c.	SOLAS Applicable Vessels	6-26
6.D.4.	Evaluation Of Weight Changes To Lightship	6-26
6.E.	Special Rules Pertaining To Specific Vessel Types	6-27
6.E.1.	Offshore Supply Vessels (Proposed 46 CFR 128.4)	6-27
6.E.1.a.	Righting Energy Criterion	6-29
6.E.1.b.	Towline Pull Criterion	6-29
6.E.2.	Tugboats And Towboats (46 CFR 174, Subpart E)	6-30
6.E.3.	Monohull Sailing Vessels And Auxiliary Sailing Vessels (46 CFR 171)	6-35
6.E.3.a.	Stability Test	6-35
6.E.3.b.	Plans Required In Addition To 46 CFR 170.075	6-35
6.E.3.c.	Stability Calculations	6-35
6.E.3.d.	Bare Poles Criteria For Certain Small Auxiliary Sailing Vessels	6-38
6.E.4	Mobile Offshore Drilling Units (46 CFR 174, Subpart C)	6-38
6.E.4.a.	Stability While On The Bottom	6-38
6.E.4.b.	Lightship Determination	6-39
6.E.4.c.	Freeboard Assignment	6-40
6.E.4.d.	Operating Manual (46 CFR 109.121 And 170.130)	6-40
6.E.5	Barges (46 CFR Part 172 And Part 174, Subpart B)	6-45
6.E.5.a.	General	6-45
6.E.5.b.	Intact And Damage Stability Criteria By Barge Type	6-45
6.E.5.b.(1)	All Barges: Weather Criterion And Righting Energy	6-45
6.E.5.b.(2)	Tank Barges	6-46

CONTENTS

SECTION		PAGE
6.E.5.b.(3)	Dangerous Cargo Barges (46 CFR 172.090 And 172.095)	6-46
6.E.5.b.(4)	Dry Cargo Barges (Within Hull Only)	6-47
6.E.5.b.(5)	Deck Cargo Barges (46 CFR 174.015 And 174.020)	6-48
6.E.5.b.(6)	Open Hopper Barges	6-53
6.E.5.b.(7)	Derrick Barges (46 CFR 173, Subpart B)	6-53
6.E.5.c.	Collision Bulkheads On Barges	6-54
6.E.6.	Bulk Cargo Vessels	6-54
6.E.6.a.	Carriage Of Cement In Bulk	6-54
6.E.6.b.	Carriage Of Sugar In Bulk	6-54
6.E.6.c.	Carriage Of Grain In Bulk	6-55
6.E.6.d.	Damage Stability Criteria	6-55
6.E.7.	Great Lakes Bulk Carriers	6-56
6.E.7.a.	Introduction	6-56
6.E.7.b.	The Magee Criterion	6-56
6.E.7.c.	Use Of Magee Criterion	6-56
6.E.8.	Liquefied Natural Gas (LNG) Carrier Requirements	6-69
6.E.8.a.	Damage Stability Requirements While Loading And Discharging Cargo	6-69
6.E.8.b.	Pollution Prevention Standards	6-69
6.E.9.	Small Passenger Vessels	6-69
6.E.9.a.	General	6-69
6.E.9.b.	Simplified Stability Test	6-69
6.E.9.c.	Simplified Subdivision Calculation	6-69
6.E.9.d.	Assumptions For Calculations/Tests	6-70
6.E.9.e.	Subdivision Calculations	6-70
6.E.9.f.	Foam Flotation	6-70
6.E.9.g.	Collision Bulkheads	6-70
6.E.9.h.	Ballast	6-70
6.E.9.i.	Watertight Doors In Watertight Bulkheads	6-70
6.E.9.j.	Simplified Tests As Equivalents To Calculations	6-71
6.E.10.	Uninspected Vessels	6-73
6.E.11.	Vessels Equipped To Lift	6-73
6.E.12.	Multi-Hull Vessels	6-74
6.E.13.	Vessels With Watertight Doors In Non-Subdivision Bulkheads	6-74
6.E.14.	Vessels With Intentional, Progressive, Or Controlled Downflooding	6-75
6.E.15.	Vessels Subject To 46 CFR 171.080 Or 171.070	6-75
6.E.16.	Vessels Subject to 33 CFR 157	6-76
6.E.17.	Vessels With Underwater Volume Beyond The Perpendiculars	6-76
6.E.18.	Lifeboats	6-76
6.E.19.	Fishing and Fish Processing Vessels	6-77
6.E.19.a.	Fishing Vessels	6-77
6.E.19.b.	Fish Processing Vessels	6-77
6.E.19.c.	Ballast	6-78

CONTENTS

SECTION		PAGE
6.E.19.d.	Stability Information	6-78
6.E.20.	Vessels Subject To 46 CFR 170.173 (Unusual Proportion And Form)	6-78
6.E.20.a.	Starting With The Weather Criterion	6-78
6.E.20.b.	Extrapolating Beyond The Data Base	6-78
6.E.20.c.	The Broad Shoal Correction	6-78
6.E.20.d.	The Rahola Criterion And Offshore Supply Vessels	6-79
6.E.20.e.	True Technical Definition Of Unusual Proportion And Form	6-79
6.E.20.f.	Why 46 CFR 170.173 And Not Rahola	6-79
6.E.20.g.	Range Of Stability	6-79
6.E.20.h.	Hull Form Characteristics	6-80
6.E.20.i.	Superstructure, Trim-Free And Fixed Trim	6-80
6.E.20.j.	Energy Balance Criteria	6-81
6.E.20.k.	Energy For Less Than Ocean Service	6-81
6.E.21.	Dynamically Supported Craft (DSC)	6-81
6.F.	Load Lines	6-82
6.F.1.	General Provisions	6-82
6.F.1.a.	Load Line Assignment And Certification	6-82
6.F.1.b.	Administration Of Load Line Statutes And Regulations	6-82
6.F.1.c.	Detection Of Violations	6-82
6.F.1.c.(1)	Introduction	6-82
6.F.1.c.(2)	Checks Of Vessels Departing On Or Arriving From A Foreign Voyage	6-83
6.F.1.c.(3)	Checks Of Vessels On Coastwise And Great Lakes Voyages	6-83
6.F.1.c.(4)	Employment Of Marine Safety Personnel	6-83
6.F.2.	References	6-84
6.F.2.a.	Load Line Statutes	6-84
6.F.2.a.(1)	Vessels In Foreign Trade	6-84
6.F.2.a.(2)	Coastwise And Great Lakes Vessels	6-84
6.F.2.b.	Load Line Conventions And Treaties-	6-84
6.F.2.b.(1)	The International Convention On Load Lines, 1966	6-84
6.F.2.b.(2)	International Convention For The Safety Of Life At Sea (SOLAS), 1974 (Load Line Provisions)	6-85
6.F.2.b.(3)	Treaty Between The U.S. And Canada Defining Certain Waters Of The West Coast Of North America As Sheltered Waters (49 Star. 2685)	6-88
6.F.2.c.	Load Line Resulations	6-89
6.F.2.c.(1)	General	6-89
6.F.2.c.(2)	Subdivision Load Lines	6-89
6.F.2.c.(3)	References	6-89
6.F.3.	Load Line Definitions And Explanations	6-89
6.F.3.a.	Assigning Authority For U.S. Vessels	6-89
6.F.3.a.(1)	General	6-89

CONTENTS

SECTION		PAGE
6.F.3.a.(2)	Application For Assignment	6-90
6.F.3.b.	Stability Approval	6-90
6.F.3.b.(1)	Stability Review	6-90
6.F.3.b.(2)	Annual Revalidation	6-90
6.F.3.b.(3)	Exception To The Procedure For Vessels Not Receiving Stability Letters	6-90
6.F.3.b.(4)	Exchange Of Damage Stability Information From Coast Guard To ABS	6-90
6.F.3.b.(5)	Exchange Of Damage Stability Information From ABS To Coast Guard	6-91
6.F.3.b.(6)	Special Procedures For Hopper Dredges	6-92
6.F.3.c.	Action By The OCMI As Load Line Assigning Authority	6-92
6.F.3.c.(1)	Issuance Of International Load Line (Single Voyage) Exemption Certificates	6-92
6.F.3.c.(2)	Issuance Of Coastwise/Great Lakes Single Voyage Load Line Authorization Letter	6-92
6.F.3.c.(3)	Application Requests	6-94
6.F.3.d.	"Foreign Voyage"	6-94
6.F.3.e.	"Coastwise Voyage By Sea"	6-94
6.F.3.f.	"Great Lakes Voyage"	6-94
6.F.3.g.	"Special Service Voyage"	6-96
6.F.3.h.	"In The Usual Course Of Its Employment"	6-96
6.F.3.i.	Operation "In Fair Weather Only"	6-96
6.F.3.j.	Applicable Load Lines	6-97
6.F.3.k.	Toledo Harbor And Port Huron, Michigan	6-97
6.F.3.l.	Subdivision Load Lines	6-97
6.F.3.l.(1)	General	6-97
6.F.3.l.(2)	Subdivision Load Lines Required On Passenger Vessels	6-97
6.F.3.1.(3)	Subdivision Load Lines Required On Small Passenger Vessels	6-98
6.F.3.m.	Timber Load Lines	6-98
6.F.3.n.	Merchant Vessels	6-98
6.F.3.o.	Fishing Vessels	6-99
6.F.3.p.	Small Vessels	6-99
6.F.4.	Load Line Certificates And Markings	6-99
6.F.4.a.	Valid Certificates And Markings	6-99
6.F.4.b.	Extension Of Load Line Certificates On U.S. Vessels	6-100
6.F.4.c.	International Load Line Certificate Exemptions	6-101
6.F.4.d.	Coastwise Load Line Certificate Exemptions	6-101
6.F.4.e.	Single-Voyage Coastwise Load Line Certificates	6-101
6.F.5.	Types Of Required Load Line Marks	6-101
6.F.5.a.	For Vessels On Ocean, Or Ocean-And-Great Lakes Voyages	6-101
6.F.5.b.	For Vessels On Great Lakes Voyages	6-102
6.F.5.c.	For Vessels On Special Service Voyages	6-102

CONTENTS

SECTION		PAGE
6.F.5.d.	Subdivision Load Lines	6-102
6.F.6.	Assignment Of Multiple Load Lines	6-102
6.F.7.	Description Of Load Line Certificates Issued Under U.S. Laws	6-103
6.F.7.a.	Load Line Certificate Forms	6-103
6.F.7.b.	Load Line Certificate Data	6-103
6.F.8.	Foreign Load Line Certificates	6-104
6.F.9.	Form B Load Line Certificates	6-104
6.F.10.	Specific Requirements Of The Load Line Regulations	6-105
6.F.10.a.	Freeing Ports	6-105
6.F.10.b.	Sill Heights	6-105
6.F.10.c.	Vent And Hatch Coaming Heights	6-105
6.F.10.d.	Bow Height	6-106
6.F.10.e.	Watertight Doors	6-106
6.G.	Hull Strength And Loading In Vessel Design	6-106
6.G.1.	Structural Plan Review	6-106
6.G.1.a.	Introduction	6-106
6.G.1.b.	Coast Guard Review	6-106
6.G.1.c.	Classification Society Review	6-106
6.G.1.d.	Review For Load Line Assignment	6-107
6.G.2.	Regulatory Structural Requirements	6-107
6.G.2.a.	Recognized Classification Societies	6-107
6.G.2.b.	Requirements For Small Passenger Vessels	6-107
6.G.2.c.	Requirements For Tank Barges	6-108
6.G.2.d.	Loading Information For Tank Vessels	6-108
6.G.3.	Vessel Structural Policy	6-108
6.G.3.a.	Offshore Supply Vessels (OSV's)	6-108
6.G.3.b.	Small Passenger Vessels	6-108
6.G.3.c.	Reinforcement Of Hull Openings By Doubler Plates	6-109
6.G.4.	Stress Monitoring And Hull Response	6-109
6.G.5.	Structural Reliability	6-109
6.C.5.a.	Reliability Concept	6-109
6.G.5.b.	Applications To Vessel Structure	6-110
6.H.	General Methods Of Fabrication	6-110
6.H.1.	Introduction	6-110
6.H.2.	Welding Procedures	6-110
6.H.2.a.	Regulatory Authority	6-110
6.H.2.b.	ABS/Coast Guard Requirements	6-111
6.H.2.c.	Welding Filler Metals	6-111
6.H.2.c.(1)	General	6-111
6.H.2.c.(2)	Coast Guard Review Of Electrodes	6-111
6.H.2.d.	Welding Guidelines	6-112
6.H.2.d.(1)	Introduction	6-112
6.H.2.d.(2)	Pre-Weld Considerations	6-112

CONTENTS

SECTION		PAGE
6.H.2.d.(3)	Repair Welds	6-112
6.H.2.d.(4)	General Welding Activities	6-113
6.H.2.d.(5)	Preheating	6-113
6.H.2.e.	Additional References	6-113
6.H.3.	Riveting Procedures	6-114
6.H.3.a.	Introduction	6-114
6.H.3.b.	General Repair Guidelines	6-114
6.H.3.c.	Hole Preparation	6-115
6.H.3.d.	Deteriorated Or Missing Rivets	6-115
6.H.4.	Tensile Fasteners	6-115
6.H.4.a.	Introduction	6-115
6.H.4.b.	Swage Locking Pins And Collars (Lockpins)	6-117
6.H.4.c.	Structural Bolting	6-117
6.H.4.d.	Design Criteria For New Construction Or Conversion	6-118
6.H.4.e.	Criteria For Use In Repairs	6-119
6.H.4.f.	Tightness	6-119
6.I.	Hull Fittings And Closures	6-119
6.I.1.	Single-Dogged Hatches And Scuttles	6-119
6.I.2.	Watertight Doors Below The Bulkhead Deck Aboard T-Boats	6-120
6.I.2.a.	General Provisions	6-120
6.I.2.b.	Provisions For Crew Boats	6-120
6.I.3.	Aluminum Hatch Covers	6-121
6.I.4.	Air Ports And Port Lights	6-121
6.I.5.	Fittings For Cargo Areas	6-123
6.J.	Maneuverability In Vessel Design	6-123
6.J.1.	IMO Guidance Documents	6-123
6.J.2.	USCG Requirements	6-123

Chapter 6. SHIP STABILITY, SUBDIVISION, STRUCTURES, WELDING, LOAD LINES, AND MANEUVERABILITY

A. General.

1. Scope Of Responsibility. This chapter delineates the responsibilities of the Naval Architecture Branch, Commandant (G-MTH-3), Office of Marine Safety, Security, and Environmental Protection, Commandant (G-M), at Coast Guard Headquarters. The activities of this branch are concentrated in six functional safety areas: subdivision, stability, structures, hull welding, load lines, and maneuverability. The objectives of the Naval Architecture Branch can be summarized as follows:

   a. To respond to inquiries from industry, the public, and Coast Guard marine safety personnel;

   b. To provide technical advice and guidance to the Coast Guard Marine Safety Center (MSC) and field inspection offices through such media as the Marine Safety Manual (MSM) and Navigation and Vessel Inspection Circulars (NVIC's);

   c. To minimize incidence of vessel capsizing by developing subdivision and stability standards that are consistent with economic considerations;

   d. To administer load line laws and regulations by providing technical advice at national and international levels, and by providing interpretations and operational guidance to the MSC and marine safety offices (MSO's);

   e. To develop regulations to promote the protection of life and property at sea and the marine environment to the extent required by law in the areas of subdivision, stability, structures, hull welding, load lines, and maneuverability; and

   f. To oversee and provide guidance to third party organizations, such as the National Cargo Bureau, Inc. (NCB), the American Bureau of Shipping (ABS), and other classification societies, to which the Coast Guard has delegated certain commercial vessel safety (CVS) functions.

2. Regulations And Instructions.

   a. Subdivision And Stability Regulations. The subdivision and stability regulations for merchant vessels are contained in 46 CFR, Subchapter S (Subdivision and Stability). Additionally, there are damage stability and subdivision standards for vessels receiving type A and reduced freeboard type B load lines in 16 CFR, Subchapter E (Load Lines). Regarding intact stability, 46 CFR 42.09-1 requires that the master off a vessel receiving a load line be provided with a copy of the Commandant approved operating conditions. Additionally, all Coast

6.A.2. a. (cont'd) Guard certificated vessels are required to meet the minimum stability requirements of the regulations. In practice, a vessel's stability information is approved by the MSC. The intact stability standards that the Coast Guard considers acceptable for load lined vessels are the same as those applied under Subchapter S to an inspected vessel of the same type and in the same service.

b. Structural Regulations. The structural regulations in each applicable subchapter of 46 CFR reference the structural standards established by ABS.

c. Instructions. The effective NVIC's issued by the Coast Guard that relate specifically to the activities of the Naval Architecture Branch (i.e., the application of subdivision, stability, structures, and load line regulations) are listed below:

No.	Subject
7-56	Manned LST's; Structural Reinforcement and Drydocking; Hull Inspection Requirements
2-62	Watertight Bulkheads in All Inspected Vessels - Maintenance of Watertight Integrity
1-63	Notes on Inspection and Repair of Wooden Hulls
11-63	LST's as Unmanned Barges; Structural Reinforcement and Drydocking; Hull Inspection Requirements
10-65	Stability Determination in Capsizing Cases Involving Uninspected Vessels
1-66	Requirements for Hull Structural Steel - Structural Continuity
3-68	Tensile Fasteners
7-68	Notes on Inspection and Repair of Steel Hulls
3-69	Z-Nomograph Method of Calculating Available GM
3-73	Intact Stability Criteria for Passenger and Cargo Ships Under 100 Meters in Length
4-74	Stability Information Required on Inspected and Uninspected U.S. Vessels Receiving a Load Line Certificate and Foreign Vessels Receiving Form B Load Line Certificates
3-75	Bulk Grain Cargoes

6.A.2. c. (cont'd)

No.	Subject
2-76	Damage Stability Calculations for Tank Vessels
3-77	Code of Safe Practice for Ships Carrying Timber Deck Cargoes
4-77	Shifting Weights or Counter Flooding During Emergency Situations
2-78	Bulk Grain Cargo Regulations (46 CFR 31.10-33, 46 CFR 74.10-12, and 46 CFR 93.20)
4-78	Inspection and Certification of Existing Mobile Offshore Drilling Units
11-80	Structural Plan Review Guidelines for Aluminum Small Passenger Vessels
8-81	Change 1 (3-23-88) Initial and Subsequent Inspection of Uncertified Existing Offshore Supply Vessels under P.L. 96-378
14-81	Stability tests; Waiving of for "Sister Vessels"
15-81	Guidelines for Conducting Stability Tests
5-82	Fixed Ballast
8-82	Load Line Certificates
10-82	Acceptance of Plan Review and Inspection Tasks Performed by the American Bureau of Shipping for New Construction and Major Modifications of U.S. Flag Vessels
15-82	Equivalent to the Minimum Bow Height Requirement of 46 CFR 42.20-70 and Regulation 39 of the 1966 International Convention on Load Lines (ICLL '66)
17-82	Intact Stability of Small Vessels; Recommendations
18-82	Form B Load Lines; Procedures for Issuance of Certificates
5-83	Unified Interpretations of the International Convention on Load Lines, 1966
10-83	Stability Approval and the Issuance of Stability Letters

6.A.2. c. (cont'd)

No.	Subject
12-83	Intact Stability of Towing and Fishing Vessels; Research Results
3-84	Acceptance of Stability Related Review Performed by the American Bureau of Shipping for New U.S. Flag Vessels
8-84	Recommendations for the Submittal of Merchant Vessel Plans and Specifications
2-85	Notification to the U.S. Coast Guard for Enforcement of Load Line Requirements
10-85	Oversight of Technical and Administrative Aspects of Load Line Assignment
5-86	Voluntary Standards for U.S. Uninspected Commercial Fishing Vessels
8-86	Coast Guard Relationships with Classification Societies for U.S. Flag Vessels
10-86	Equivalence to Minimum Bow Height Requirements for Load Line Assignment
8-87	Notes on Design, Construction, Inspection and Repair of Reinforced Plastic (FRP) Vessels
1-88	International Load Line Certificates for Small Passenger Vessels Operating Within 20 Miles of a Harbor of Safe Refuge
3-89	Guidelines for the Presentation of Stability Information for Operating Personnel

3. Format Of This Chapter. Sections 6.B through 6.E of this chapter provide guidance on the application of the regulations in 46 CFR, Subchapter S. (Subdivision and Stability Regulations). The order of these parts follow the order of Subchapter S as much as possible. To aid in this correlation, the applicable regulation has been placed in parentheses next to the title of the part or subpart. All references are for title 46, CFR unless otherwise noted. Section 6.F provides guidance on the assignment, marking, and certification of load lines. Section 6.G provides guidance for the review of structural designs and Section 6.H addresses general methods of fabrication, such as welding and riveting. Section 6.I provides guidance for the review of hull fittings and closures while Section 6.J discusses vessel maneuverability.

6.A.4. Research And Technical Papers. Much valuable work has been documented in Coast Guard funded research and Coast Guard authored technical papers presented to the Society of Naval Architects and Marine Engineers (SNAME), and various conferences and symposiums. Although this information is not policy, it contains insight that should not be forgotten or lost. It lends itself to reference at the very least. The following lists are not complete in all respects.

USCG AUTHORED SNAME PAPERS (UNLESS OTHERWISE NOTED) THAT AFFECT MTH-3

STABILITY

Survival of Collision Damage Versus the 1960 Convention on Safety of Life at Sea (1961, transactions)
Comstock and Robertson
Discusses the separation of bulkheads philosophy.

On the Stability of Sailing Vessels (1966, Chesapeake)
Beebe-Center and Brooks
Empirical sail criteria based on existing vessels - became regulation.

On the Stability of Small Passenger Vessels (1967, Southeast) Brooks

Stability of Fishing Vessels (1968, MT October)
Price Discusses IMCO initiative briefly.

Stability and the Stowage of Bulk Grain in Ships - Activities of the IMCO (1969, Mt October)
Price and Middleton

Recent Coast Guard Research into Vessel Stability (1973, Chesapeake)
Bower, Johnson, and Jones
Overviews CG criteria and R&D efforts with stability on a wave.

The New Equivalent International Regulations on Subdivision and Stability of Passenger Ships (1974, transactions)
Robertson, Nickum, Price, and Middleton
Probabilistic approach to flooding - became alternate regulation.

Trim, Stability and Loading Manuals: A Survey of Needs, Uses and Improvements (1974, transactions)
Johnson

Development of Intact Stability Criteria for Towing and Fishing Vessels (1976, transactions)
Johnson

Damage Stability Requirements for Tankships, Chemical Ships, and Gas Ships (1976, MT April)
Kime, Johnson, and Rabe
Overview of past/new damage standards, domestic and international.

6.A.4. (cont'd)

A Review of the IHCO Code for Gas Ships (1977)
Kime

Paravane Roll Stabilization (1979, STAR)
Koelbel, Fuller, and Hankley
Derives methods to design paravanes - often used on fishing vessels.

Has Stability Delayed the Delivery of Your Tug? (1980, HT January)
McGowan and Meyer
Overviews of past/current stability standards - became policy.

Assessing Intact Stability (1980, MT April)
Henrickson
Overviews development of intact stability criteria.

A Simplified Stability Letter for Offshore Supply Vessels (1981, HT January)
Meyer and Feeney
Presents methods and examples for using simple loading diagrams.

Subdivision, Stability, Liability (1982, MT July)
Cleary
Overview of regulatory philosophy and experience.

Safety and Stability Considerations for Sail-Assisted Fishing Vessels (1983, Symposium)
Remley

Investigation of Damage Stability of Dry Cargo Ships (1983, transactions)
Michael

Minimum International Damaged Stability Standards for Cargo Ships (1985, Philadelphia) Henn and Letourneau

An Investigation into the Loss of the Mobile Offshore Drilling Unit OCEAN RANGER (1985, MT April)
Johnson and Cojeen
Discusses the major casualty off of Nova Scotia-
ballasting/downflooding.

Tug and Barge Stability Requirements (1986, Tow Conference)
Letourneau
Overview of intact and damage requirements.

Sailing Vessel Stability: With Particular Reference to the Pride of Baltimore Casualty (1987, Chesapeake)
Maxham and Chatterton
Discusses sail criteria and specific sail vessel casualties.

Stability Information for the Fisherman Based on the Roll Center (1987, Chesapeake)

6.A.4. (cont'd)

Letourneau, Jons, and Fuller
Discusses presentation of stability using a new method.

RO-RO Stability (RO-RO 1988 Conference)
Spencer and Gilbert
Discusses subdivision and damage stability of roll on-roll off ships and the ability to meet new international standards for dry cargo ships.

Gilbert's comments to Robert tam and R. Keith Michel's Intact Stability Standards for Containerships (1989, MT October)

Dynamic-Response-Based Intact and Residual Damage Stability Criteria For Semisubmersible Units (1989, transactions)
Shark, Shin, and Spencer

Overview of Coast Guard Plan Review for High Tech Ship Design (1990, MT January)
Hayden and Watson
Discusses concept review with specific examples.

The New International Standard for Subdivision and Damage Stability of Dry Cargo Ships (1990, MT March)
Gilbert and Card
Outlines development and application of probabilistic damage standard.

Review of the New SOLAS Damage Stability Requirements for Passenger Ships (1990, International Stability Conference)
Carrisen and Spencer

Intact Stability Standards for Large Sailing Vessels (1990, International Stability Conference)
Gilbert, Hayden, and Marean

FISHING VESSELS

The International Convention for the Safety of Fishing Vessels - 1977 and What it Means to the United States (1976, Hampton Roads)
Cleary

U.S. Coast Guard's Fishing Vessel Safety Initiative (1987, Chesapeake)
Piche', Morani, and Chatterton
Outlines voluntary program development.

STRUCTURES AND MONITORING

Structural Design of Aluminum Crewboats (1975, MT July)
Spencer

Status Report on the Application of Stress and Motion Monitoring in Merchant Vessels (1980, STAR)
Cojeen

6.A.4. (cont'd)

A Synthesis of Aluminum Crewboat Structural Design (1982, MT January)
Spencer and Henrickson
Discusses design - led to NVIC 10-80.

A Coast Guard Perspective on the Safety of Marine Structures (1983, NRC Marine Structure Reliability Symposium)
Spencer and Henn
Discusses probabilistic approaches as an alternative to deterministic structural approaches.

A Summary of Coast Guard Relations with the American Bureau of Shipping (1984, MT July)
Spencer and Henn

The Usefulness of Response Monitoring for Estimation of Bow Structural Loadings (1985, NY)
Cojeen

An Approach to the Evaluation of Service Life (1990, Integrity of Offshore Structures-4)
Baxter, Cojeen, Bowen, Thayamballi, and Bea

U.S. Coast Guard Experience with Commercial FRP Vessels (1990, ASCE Materials Engineering Congress)
Hayden and VandeVoorde

Load Lines - the Lever of Safety (1975, Transactions)
Cleary

USCG RESEARCH AFFECTING MTH-3

72-74 Experimental Studies of Capsizing of Intact Ships in Heavy Seas (DTCG84-549-A), model tests at Berkeley by Paulling show broaching and following seas problem.

75 Evaluation of Current Towing Vessel Stability Criterion and Proposed Fishing Vessel Stability Criteria (DTCG24-656-A), literature survey by Hydronautics and calculations for 51 vessels.

76 Evaluation of Current Towing Vessel Stability Criterion and Proposed Fishing Vessel Criteria (DTCG24-656-A), model test results from Hydronautics.

76-79 Model Tests and Numerical Simulation of Ship Capsizing in Following Seas (DTCG-64601-A), model tests at Berkeley compared to Capsize program to verify validity by using SL-7, Mariner, and crabber.

77-78 Mobile Offshore Drilling Units (Rosenblatt).

6.A.4. (cont'd)

79-80 Stability Information for the Master (DTCG-835633-A), Frankel reviews trim and stability booklets to offer guidelines in booklet development.

79-81 Development of an Analytical Technique for Predicting Deck Wetness (DTCG-844748-A), Giannotti summarized model test results toward rational freeboard criteria.

79 Classification of Intact Stability Standards for Dynamically Supported Craft (DTCG-806510-A), history of stability criteria and discussion of non-displacement mode concerns/criteria.

80-81 Development of Intact Stability Standards for Rigid-Sidehull Surface Effect Ships (DTCG23-80-C-20042), Band-Lavis summarizes experience and recommends stability criteria (USN in displacement mode).

82 Great Lakes Hatch Cover Assessment Project (DTCC23-80-C-20039), Santa Fe Corporation ran finite element analysis of hatch covers for suitable strength/design. Concluded that only the design used on the EDMUND FITZGERALD was inadequate.

84 Study of Great Lakes Vessel Casualties and the Impact of Proposed USCG Stability Requirements (DTHA91-82-D-20027), Designers and Planners analyzed work for MARAD using casualty data obtained for Lake Carriers by Marine Consultants and Designers. Considered in writing GL damage requirements.

82-84 Rational Method for Upgrading Towed Safety (DTRS5683-C-00005), modeling and simulation by U of M. Produced computer programs.

84 Parametric Study of Angle of Vanishing Stability for Ships in the Intact Condition (DTCG23-83-C-20097), IES of Texas tried to determine if a more rational method of evaluating freeboard could ascertain adequate stability. Recommend more research.

84 Parametric Analysis of Static and Dynamic Stability Properties of Heavy Lift Ships (DTCG23-83-20041), Stephens Engineering ran many calculations to set preliminary smooth water heel limits for non-counterballasted ships that lift large loads.

84 Evaluation of Small Passenger Vessel Stability Test Procedures (DTCG23-83-C-20089), Arctec concluded simplified test equivalent to larger vessel procedures.

84 Nonlinear Motions and Forces on TLP (DTCG23-83-C-20064), Salvesen used 3D hybrid finite element method.

84, 86 An Assessment of Wave and Wind Data for use in the Design of TLP US Offshore Areas (DTCG23-83-F-04433 and 23-85-F-20014), Buckley of David taylor used NOAA buoy data to identify extreme sea spectra.

6.A.4. (cont'd)

85 Climatic Wind and Wave Data for use in the Design of TLP - US Offshore Areas (DTCG23-85-F-20023), National Climatic Data Center furnished wave height variance spectra to estimate loads on TLP.

86 Cargo Sailing Vessel Stability Standards (DTCC23-83-C-20075), died in midstream when contractor convicted of fraud (IES of Texas).

87 STAAF computer program update, Lorenz made general improvements to STAAF 1 on the VAX to make STAAF 2 effective.

87 Safe Operating Mode of Ballasting for MODU's (DTCG23-85-C-20070), Noble Denton studied ballasting with analysis of existing designs highlighting specific design faults.

87 Motions Program Procurement (DTCG23-86-10122), Frank Chou (FCA) delivered motions software to allow examination of vent heights on MODU's. Extended to test motion of lifeboat MR. JOHN and to obtain weather profiles on two 100 foot water depth locations in GOM.

88 Nonlinear Loads and Motions of MODU's (DTCG39-88-C-80596), software from FCA put on VAX and tested with a barge and a semi-submersible. Phase II not pursued in part due to dynamic wind limitations.

86-88 An Investigation of Non-linear Aspects of Ship Dynamic Stability (Falzarano/U of M), summarized fishing vessel stability criteria and studied water on deck of PATTI-B in the time domain.

87-89 Plan Review Suite of Naval Architecture Programs (DTCG23-87-C-20044), FCA modified their existing software to include USCG stability criteria and installed it on the VAX.

87-88 Qualitative Analysis of Load Lines (Sharp).

88-89 Damage Stability of Dry Cargo Ships (Level of effort contract), investigates impact of probabilistic standard proposed at IMO.

B. Stability-Related Drawings And Calculations (46 CFR 170-174).

1. Lines Drawings (46 CFR 170.072).

a. An accurate lines drawing is imperative for any stability evaluation. The Coast Guard enters the lines information into a computer by directly tracing the body plan on an electronic digitizing tablet. The image of the body plan must be exactly to scale, be easily readable and should not exceed 28.5 inches high by 39 inches wide.

6.B.1. a. (cont'd) the lines drawing should show details of all volumes which are to be included in computing the hydrostatic properties of the vessel such as appendages, forecastle and poop decks, deckhouses and other superstructures. Superstructures and deckhouses will only be included if:

(1) Their fabrication and construction satisfies ABS or other recognized classification society strength requirements;

(2) Doors in external bulkheads are of steel or other equivalent material and meet the requirements of Regulation 12, 1966 International Convention on Load Lines or 46 CFR 42.15-10 and have at least 15-inch coaming heights;

(3) There is a means of escape from within the structure to the deck above, independent of the external bulkhead doors; and

(4) All openings In the sides of the structure are weathertight.

Bulwarks are not permitted to be included in a vessel's buoyancy.

b. In the case of vessels of unusual shape or form, such as mobile offshore drilling units (MODU's) and hopper dredges, the traditional lines plans do not always contain enough information to model the hull. In order to prevent a misinterpretation of the hull form, the designer should provide the following plans in addition to the lines drawing:

(1) Inboard (centerline) profile;

(2) Outboard profile;

(3) General arrangements or deck plans; and

(4) Cross bracing and truss diagrams.

These drawings should be marked or highlighted to locate volumes which are free-flooding and to show the extent of watertightness of irregular deck structures, pontoons, stabilizing columns, and major and minor cross tubulars. [NOTE: For split-hull hopper dredges which require a "working freeboard," a second lines drawing should be submitted showing the hull in the open position.]

2. Curves Of Form (46 CFR 170.075). Curves of form should be prepared so that they span the full range of operating drafts, from lightship to full load. The amount of information presented on this drawing varies with the extent of the analysis required. At a minimum, the following curves must be included: displacement, KMT, KML, KB, longitudinal center of buoyancy (LCB), and longitudinal center of flotation (LCF).

6.B.3. Cross Curves (46 CFR 170.075). This drawing consists of a plot of righting arm curves over the full range of operating drafts. Usually, they are developed assuming zero trim and a KG (pole height) equal to zero. The righting arms should be plotted at the following angles of heel: 5, 10, 15, 20, 25, 30, 35, 40, 50, and 60 degrees. The assumed KG and buoyant appendages should be identified on this drawing. If a particular stability criterion requires righting arm values to be calculated taking into account the change in trim with heel (zero trimming moment method), or if this method is desired by the designer, the designer's computer output should then include values of righting arms for each loading condition investigated.

4. Weather Criterion (46 CFR 170.170). When demonstrating compliance with the weather criterion in 46 CFR 170.170, calculations of the required metacentric height for particular loading conditions should be performed assuming the vessel is on an even keel.

a. The angle of heel (T) in the CM-Required formula is defined as 14 degrees, or the angle of heel at which one-half the freeboard to the deck edge is immersed, whichever is less. Normally, the deck referred to is the freeboard deck. For some vessels, this could be a severe penalty when the designated freeboard deck is significantly lower than the main (weather) deck. The freeboard may be measured to the higher weather deck if the hull above the freeboard deck is watertight and the hull penetration requirements in 46 CFR 56.50-95 are met, substituting the weather deck for the freeboard deck for the purpose of those regulations.

b. The angle of heel (T) may also be increased, as follows, if a vessel has a superstructure extending from shell to shell with adequate strength, tightness, and closures, as follows:

(1) If a vessel has a superstructure of height "k" for the full length of the vessel, the freeboard "f" to the freeboard deck may be increased by a height "h" where "h" is equal to or less than "k":

Then $\tan(T) = \dfrac{\frac{f+h}{2}}{B/2} = \dfrac{f+h}{B}$ **(not to exceed tan 14 degrees, i.e., 0.25).**

From $\dfrac{f+h}{B} = .25$ **maximum,**

the permissible freeboard addition "h" (max.) = (B/4)-f.

Formulas

(2) If a vessel has a superstructure of less than the full length of the vessel, the freeboard addition "h" is limited by two considerations. The first is the relative length of the superstructure; the second is the transverse distribution of the

6.B.4.b. (2) (cont'd) superstructure volume relative to that of the main hull below. These two items are combined in the factor "a/b," which represents the applicable percentage of total superstructure effectiveness as given in subparagraph 6.B.4.a.(1) above.

therefore, the maximum permissible freeboard addition is: a/b (h) = a/b ((B/4)-f).

the total permissible freeboard is f + (a/b)((B/4)-f), and the maximum permissible tan (t) that can be used is:

$$\tan(t) = \frac{f + (a/b)((B/4)-f)}{B}$$

[NOTE: Areas "a" and "b" as determined in accordance with Figure 6-1 are measured on the freeboard deck. No area within the 2/3 "B" of the vessel transversely shall be included in such areas.]

5. Free Surface Calculations (46 CFR 170. Subpart I). For large vessels or vessels with numerous large fuel tanks, in addition to accounting for the free surface of the largest pair of fuel tanks as required by 46 CFR 170.285 and 170.290, the possibility of some free surface of the remaining fuel tanks should be taken into account. This may be done by considering the remaining fuel tanks as 98 percent full and computing the free surface of those tanks at a 5 degree heel angle. When calculating the free surface effect of fuel tanks at a five degree heel angle, the moment of inertia method is to be used.

Moment of transference is acceptable in lieu of inertia calculations for determining the free surface effects of the required combination of tanks. However, the calculations must correspond to mid-level soundings, as described in NVIC 3-73 (IMO tables), and applied to the required loading conditions, irrespective of actual soundings. This conservative assumption justifies examining a limited number of conditions, and is the same procedure used when calculating free surface corrections by the inertia method.

Tanks with the largest free surface effect need not be included in calculations when simple guidance ensures they will remain empty.

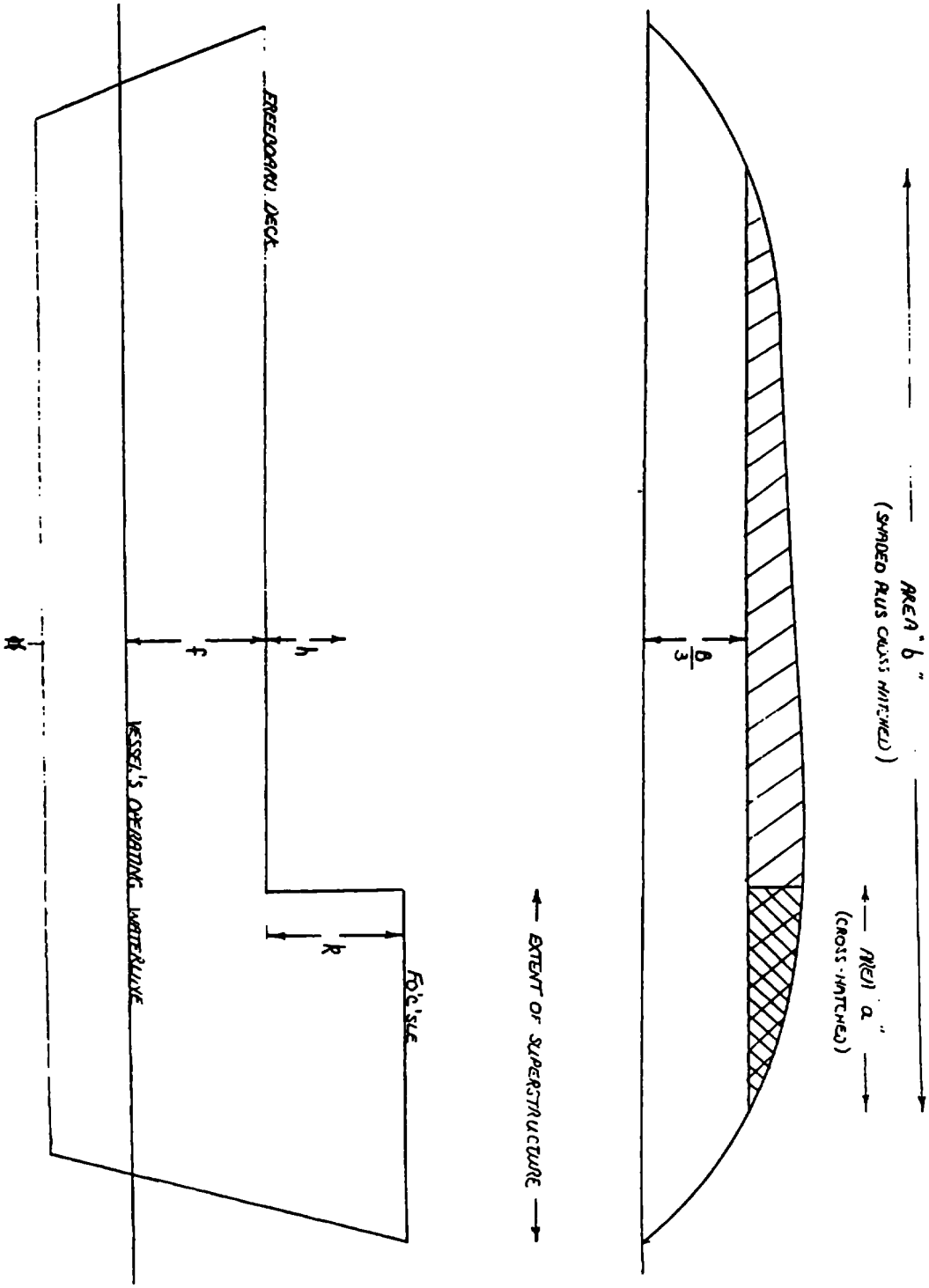

FIGURE 6-1 WEATHER CRITERION

6.B.6. Draft Mark Locations (46 CFR 170.075). A drawing showing draft mark locations is required by 46 CFR 170.075 to be submitted for approval. For uniformity, draft marks should be of such a height that their vertical projection on the vessel is 6 inches, with the space between figures also having a vertical projection of 6 inches. The bottom of each draft figure is placed coincident with the waterline that figure indicates. Additional regulations for inspected vessels are found in 46 CFR 32.05-1, 46 CFR 78.50-10, 46 CFR 97.40-10, 46 CFR 108.661, 46 CFR 167.55-1. and 46 CFR 196.40-10.

7. Subdivision And Damage Stability Calculations.

a. Scope Of Submittal. The designer is responsible for conducting a parametric study to determine the damage condition which is governing for each loading condition or tense of loadings. Submittal of all the detailed calculations is not desired. The designer should submit the following to demonstrate that the vessel meets the applicable criteria:

(1) A summary of the damage conditions examined;

(2) A list of the operating restrictions assumed by the study;

(3) Calculations for one of the governing conditions in sufficient detail to show the method used;

(4) A list of the locations of all potential downflooding points; and

(5) Sufficient drawings and capacity tables to detail the watertight subdivision of the vessel.

The parametric study should examine the effect of change of vessel trim for the range of normal trims specified in the operating restrictions assumed.

b. Righting Arms. The zero trimming moment (trimming free) method of computing righting arms should always be employed when performing damage stability calculations.

c. Tonnage Openings. When stability standards require a range of positive stability beyond the angle of equilibrium, tonnage openings secured with place closures to the maximum extent allowed by the provisions of 46 CFR 69.03-67 need not be considered as points of downflooding within the range of residual stability. They are considered as points of downflooding if they are submerged below the final equilibrium waterline.

C. Stability Letters And Trim And Stability Booklets (46 CFR 170. Subpart D).

1. Issuance Of Stability Letters. 46 CFR 170.120 specifies when a stability letter is required for an inspected vessel. In the operations section of

6.C.1. (cont'd) each of the title 46 subchapters is a requirement to post the stability letter. NVIC 10-83 was issued to inform the public that the Coast Guard has changed its procedures regarding the offices that issue stability letters. The internal procedural aspects of that circular are as follows:

a. Officer In Charge. Marine Inspection (OCMI) Actions. An OCMI will continue to issue stability letters to the owners of small passenger vessels less than 65 feet in length when required by 46 CFR 170, Subpart D. If, however, the OCMI requests that the MSC conduct the stability evaluation, the MSC may then issue the stability letter. The OCMI shall enter the date of the stability letter in the appropriate space on the vessel's Certificate of Inspection (COI).

b. MSC Actions. The MSC (Cargo Division) normally reviews the stability of tank barges and tank ships while the MSC (Hull Division) normally reviews the stability of other vessels and:

(1) If the Vessel Is Inspected And Load Lined. Issue a stability letter to the owner of the vessel, send a copy to the OCMI to be referenced on the CO, and direct the load line assigning authority to indicate the date and issuing office on the face of the Load Line Certificate. If a stability letter will not be issued such as in the case of an unmanned deck cargo barge, the following statement should be placed in the letter which approves the stability calculations and authorizes the issuance of a Load Line Certificate:

"The stability information specified in 46 CFR 170.120 and 46 CFR 42.09-1 is not required."

(2) If the Vessel Is Inspected But Not Load Lined. Issue a stability letter to the owner of the vessel and send a copy to the OCMI to be referenced on the COI.

(3) If the Vessel Is Load Lined But Not Inspected. Issue a stability letter to the owner to be placed on the vessel and send a copy to the assigning authority, directing its attachment to the Load Line Certificate and indication of the date and issuing office on the face of the certificate.

(4) If the Loading Restrictions Are Brief (i.e. 25 Words Or Less). The MSC may elect not to issue a stability letter, in which case the OCMI and the load line assigning authority will be advised of any restrictions to be placed on the COI or Load Line Certificate, as appropriate. The restriction may be as simple as requiring that the vessel be operated in accordance with an approved operating manual. Enclosures (1) through (4) of NVIC 10-83 are samples of letters that may be used by the MSC to

6.C.I.B. (4) (cont'd) inform the OCMI, the assigning authority, and the owner of the appropriate stability information for the vessel.

(5) Standard Items to Include In All Stability Letters Or Booklets. All manned vessels which are reviewed by the MSC shall normally be issued a stability letter. The specific guidance needed to ensure compliance with the regulations must be included. It shall include such items as: route, passenger access to upper decks, the maximum draft, and crane limitations. General guidance should include such items as: slack tanks, weather openings, deck drainage, bilge water, correction of list, and the master's responsibility to ensure satisfactory stability. When the loading restrictions can be reduced to a few sentences and placed on the COI or load line certificate, a stability letter is not normally issued.

c. Actions Of Assigning Authority. Assigning authorities such as ABS shall follow the directions received from the MSC regarding the information to be placed on or attached to Load Line Certificates.

d. Additional Provisions. If a revised stability letter is issued to an existing vessel, the procedures of NVIC 10-83 shall be followed. These provisions do not supersede an OCMI's authority to issue a stability letter to any vessel in unusual circumstances or when it is more expeditious to do so. The provisions of NVIC 10-83 do not modify procedures for the submitting of stability plans and calculations for approval.

2. Temporary Stability Letters. There are instances when a vessel is ready for delivery but a permanent stability letter cannot be issued, for a variety of reasons. In these instances, the MSC may issue a temporary stability letter, normally for a maximum of 5 months, so that its expiration will coincide with the expiration of a provisional load line certificate. If deemed necessary by the MSC, the temporary stability letter may be issued for a 6-month period. The use of a temporary stability letter is to help get a vessel to sea rather than detain it, but it is not done for economic assistance to the owner. The temporary letter is to cover the time needed to obtain final approval of the stability calculations. The temporary stability letter should not be issued when marginal stability or questionable calculations indicate that the final calculations are necessary before releasing the vessel. Temporary stability letters should contain restrictions (e.g., a conservative curve of required metacentric height, a reduction in deck cargo, a reduction in the number of passengers or a reduced draft) to ensure that the vessel meets the applicable stability criteria and that owners have an incentive to obtain permanent stability letters as soon as possible. The MSC will clearly detail the reasons for issuing a temporary stability letter when it is issued and will include its expiration date in the temporary stability letter. It is the owner's responsibility to ensure that the necessary actions are taken in a timely fashion to obtain a permanent

6.C.2. (cont'd) stability letter. The outstanding requirements for each temporary stability letter shall be recorded and shall be satisfactorily corrected prior to the issuance of a permanent stability letter. Temporary stability letters are not intended to substitute for timely submission of required calculations. They should not be issued routinely to compensate for the owner's failure to show compliance with the applicable regulations.

3. Computers to Calculate Stability On Board. Computers may be used only as an adjunct to the required T&S book. The master must be provided with the capability to manually calculate stability if he so wishes. However, he may use whatever tools he wishes to assist him in his responsibility to ensure satisfactory stability. A computer may be referred to by a stability letter or booklet as an adjunct if the MSC has verified that it produces nearly identical results to the approved manual guidance in a number of representative loading conditions. The computer input form should be similar to forms used in the T&S book.

4. Capabilities Of Operational Personnel And Stability Guidance. The stability guidance approved for use by the operator must be suitable for the capabilities of the staffing requirements for the vessel. In general, trim and stability booklets are not suitable unless a licensed officer will operate the vessel. Trim and stability booklets on vessels without licensed masters will be considered by the MSC if simple instructions are included in a first section which offers a rapid means of ascertaining satisfactory stability and defers to a following section which requires calculations, which are necessary for certain anticipated vessel operations. The simple instructions will normally be in the form of loading and operating restrictions and/or a loading diagram. The MSC may require that the owner certify that the master will be qualified to use the stability guidance.

The stability guidance should not indicate a loading condition acceptable for stability concerns, yet unacceptable for longitudinal strength concerns. Often the strength and stability information is contained within a single manual and this will not be a problem. When separate guidance is provided, a provision should be made to preclude unsafe loading when using only one type of information. All vessels should be provided with stability information which includes, at a minimum, guidance on maximum draft and slack tanks.

D. Stability Tests (46 CFR 170, Subpart F).

1. Inclining Experiments.

a. Introduction. NVIC 15-81, "Guidance for Conducting Stability tests," contains general guidelines to follow in conducting an inclining experiment on a vessel. The responsibility for making preparations and conducting the test lies with the owner, builder, or naval architect. Each stability test must be witnessed by a Coast Guard

6.D.1. a. (cont'd) representative or an ABS surveyor, if provided for by current directives. Although the Coast Guard representative or ABS surveyor at an inclining is termed a "witness," he or she actually serves as the approving official on scene. This person has the authority to require changes to the procedure during the test or approve changes suggested by the naval architect. This official on scene is expected to be competent in all phases of the stability test and have a familiarity with the remainder of the stability approval process. Regulations specifying when a test is required and what procedures must be followed are in 46 CFR 170, Subpart F.

b. Coast Guard Representation. As stated in NVIC 15-81, marine inspectors are being trained to witness stability tests to reduce the extensive costs and time losses associated with the travel of technical personnel. If technical assistance is necessary, it will be provided by the MSC.

c. ABS Representation. If current directives provide for an ABS surveyor to witness a stability test for a particular vessel, the provisions of NVIC 15-81 shall still be utilized. Arrangements for a surveyor to witness the test shall be made through ABS.

d. The Use Of Water to Produce the Inclining Moment. In very unusual circumstances, where the use of solid weights to produce the inclining moment is demonstrated to be impracticable, the movement of liquids may be considered as an alternate method. This acceptance would be granted for a specific test only, and specific approval of the test procedure is required. As a minimal prerequisite for acceptability, the following conditions shall be required:

(1) the water to be shifted should be in rectangular tanks, so that the quantity and vertical center of gravity (VCG) can be accurately calculated;

(2) the tanks must be sounded for each movement;

(3) Verification of the quantity shifted shall be achieved by a flowmeter or similar device;

(4) Specific gravity measurements shall be taken during and after the test;

(5) Vertical, longitudinal, and transverse centers shall be calculated for each movement;

(6) The distances the centers are changed shall be calculated for each movement;

(7) Free surface effects must be included in the calculations;

6.D.1.d. (8) The anticipated time to conduct the inclining must be estimated. If too long, water may be unacceptable because of the possibility of wind shifts over long periods of time; and

(9) Blanks must be inserted in transfer manifolds to prevent the possibility of liquids being "lost" during transfer.

e. Precautions For MODU Inclinings.

(1) The vessel should be inclined at a draft which will produce the lowest possible GH while retaining at least 5 feet of bottom clearance. In column stabilized units this usually occurs after submergence of the lower hulls or pontoons. The draft selected should be free of waterplane variations such as intersecting diagonal trusses. Ballast is permitted to reduce the excessive GH normally encountered at light drafts. This GH reduction is deemed more important than the error induced by permitting liquid loading.

(2) Reference marks should be established near the intended water line prior to the test. Actual freeboard readings are nearly impossible to take. Draft boards calibrated in inches and installed to bracket the inclining draft are very useful since small boat maneuvering is sometimes difficult.

(3) The vessel should be moored so that the inclining axis is parallel to the current, or prevailing wind, if current is not a factor. If chains and the vessel's anchoring system are used, an accurate means of determining payed out weight must be present. Long scopes of chain parallel to the current are preferred. The weight of the catenary must be compensated for in the lightship calculation.

f. Shifting Of Weights On MODU's.

(1) In circumstances where it is demonstrated to be impracticable to use certified weights it may be possible to move a large structure (such as the drill floor and substructure of a MODU) to produce the inclining moment. In such cases it is essential that the weight of the structure be accurately determined. The method of weighing the structure should be submitted with the inclining procedure (46 CFR 107.085) for approval. The following should be included in an acceptable procedure:

(a) The structure should be weighted. Calculated weights are not normally accurate enough;

(b) The weighing procedure should be validated with a certified test weight. The test weight should be about 10 percent of

6.D.1.f.(1) (b) (cont'd) the weight of the structure. The structure should be weighed with and without the test weight on the structure;

(c) The instruments should be calibrated in accordance with the manufacturer's instructions before the weighing; and

(d) The structure should be reweighed several times to ensure that consistent readings are being obtained.

(2) If the weighing method relies on measuring the hydraulic pressure of fluid in Jacks used to lift the structure, the following additional precautions are required:

(a) All air must be bled from the hydraulic lines before the readings are taken. It is usually necessary to cycle the cylinders several times under load and to bleed the lines under pressure to accomplish this. Due to the pressures involved, special fittings may be required to permit the lines to be bled safely;

(b) Before a reading is taken, the pressure should be held with the pump off and its stop valve closed for several minutes and the gages observed for drift. Any drift of the pressure indicates a leak or air in the system and is cause for rejection of the data as inaccurate; and

(c) Some readings should be taken after the cylinders have been extended and others after they have last moved in the retract direction to check the influence of cylinder seal friction on the reading.

g. Inclinings Of Column Stabilized Units.

(1) The typical lightship condition has a significant metacentric height. This requires much larger heeling moments to produce equivalent results based on the standards off NVIC 15-81.

(2) Clear deck area for movement of weights may not be available. As a result, even though the larger heeling moments could be achieved by larger levers, it usually also requires heavier weights than normal. Weight handling is often a major problem because of structural interferences.

(3) The "sail area" is usually very significant and the vessels are particularly susceptible to environmental changes. Even a light rain shower during the time of an inclining can result in significant additional weight on board due to wetted surface and would invalidate results.

6.D.1.B. (4) Their physical size limits the locations where the inclining test can be performed.

2. "Sister Vessels."

a. Determination Of Sister Vessel Status. Regulations permit the Coast Guard to dispense with the requirement for a stability test when basic data is available from the stability test of a sister vessel. NVIC 14-81, "Stability Tests; Waiving of for 'Sister Vessels'," provides a means by which the shipbuilding company can attest that two vessels are sister vessels. Accordingly, the requirement for a stability test on the second vessel can be waived. If a shipbuilder decides not to submit such an attestation, but thinks that two vessels may in fact be sister vessels, a deadweight survey may be requested for the second vessel in lieu off a stability test. There is no established definition of a "sister vessel." It is expected that the MSC will exercise professional judgment to determine whether a deadweight survey demonstrates that a vessel is a "sister vessel." The following general guidelines have been developed to provide guidance and to help keep the determination of "sister vessel" as uniform as possible:

(1) The previously inclined vessel and the proposed sister vessel should have been built within approximately 2 years from one another;

(2) The vessels must be built by the same shipyard; and

(3) The same basic drawings should have been used in the construction of both vessels.

If these or similar requirements are satisfied, the owner, designer, or shipyard may request that a deadweight survey be conducted in lieu of an inclining experiment. The MSC must specifically authorize the deadweight survey. If the results of the deadweight survey show that, when compared to the inclined vessel, the vessel's displacement and longitudinal center of gravity (Lcc) are within such tolerances as stipulated by the MSC, the vessel's vertical center of gravity may be assumed as being the same as that of the inclined vessel. For the types of vessels normally encountered (such as small passenger, offshore supply, and towing vessels), the unaccountable difference between the lightship data of the first vessel as determined by an inclining experiment, and that of a following vessel, as determined by a deadweight survey, should not exceed 3 percent in displacement and 1 percent of the length between perpendiculars (LBP) in the location of the longitudinal center off gravity. The MSC may require closer tolerances if considered necessary. On large vessels (typically longer than 100 meters), 2 percent of lightship displacement will normally be appropriate in lieu of 3 percent of lightship displacement.

6.D.2. b. Responsibility For Conducting A Deadweight Survey. The MSC is responsible for determining whether or not a deadweight survey maybe conducted on a sister vessel, in lieu of an inclining experiment. If a shipyard requests a marine inspector to witness a deadweight survey, the NSC should be advised of the request to determine whether a deadweight survey is acceptable on that particular vessel, and whether the inspector should witness it. Each deadweight survey authorized by the NSC must be performed in the presence of a Coast Guard representative, who shall verify individual measured recordings and certify the required data. It is the owner's or builder's responsibility for making the necessary preparations, conducting the survey, and submitting the results. [NOTE: If ABS is reviewing the stability of a series of vessels, in accordance with current directives, it will make the determination as to "sister vessel" status in accordance with this paragraph.]

c. Deadweight Survey Procedures. NVIC 15-81 identifies three tasks involved in conducting a stability test: the inclining, the freeboard readings, and the survey. The only difference between a stability test and a deadweight, survey is that the actual inclining is not conducted as part of the deadweight survey. The procedures that should be followed in a deadweight survey are as follows:

(1) General Condition Of the Vessel.

(a) The vessel should be completed or as nearly completed as possible. The weight and longitudinal center of gravity of each item to be completed, deducted, or relocated must be able to be accurately determined.

(b) The vessel should be in a good state of cleanliness. Shipyard gear and equipment, workpersons' tool boxes, scaffolding, scrap, and construction debris must be removed from the vessel.

(c) Bilges must be dry and decks free of liquids, such as rain water.

(d) Boilers, wet machinery, and piping should be at operating liquid levels.

(e) All spaces must be accessible for inspection. All manholes must be open, all tanks gas-freed and well ventilated.

(f) Only personnel required to conduct the survey should be aboard. No ship's work should be in progress.

6.D.2.c. (2) Tankage.

(a) The number of tanks containing liquids should be at a minimum. It is preferred that all tanks be empty at the time of the survey. However, it maybe necessary to permit water in one or more ballast tanks in order to remove excessive trim or list.

(b) Some slack tanks amy be permitted because of operational requirements, provided accurate soundings can be taken. These are normally limited to the following tanks: sewage; lube oil; and fuel oil settlers or day tanks.

(c) To be considered empty, it is generally not sufficient to simply pump tanks until suction is lost. It may be necessary to enter tanks and perform final stripping with portable pumps.

(d) The specific gravity of liquids in tanks must be determined.

(3) List And Trim.

(a) Stability calculations are simplified if the vessel is on even keel so that the curves of form may be used to determine hydrostatic properties. If not on an even keel, the architect will have to perform an independent waterplane calculation. Empirical formula for a trim correction to KMT shall not be used unless the vessel has the form typical of large ocean-going ships built prior to the 1970's. These ships had fine lines forward and rounded sterns. (NVIC 1-67 and NVIC 17-82)

(b) Excessive list is unacceptable. Leveling weights may be used to correct list, but these must be certified and included in the weights to be deducted.

(4) Mooring Arrangements.

(a) The depth of water under the hull should be sufficient to ensure that the hull will be entirely free of the bottom.

(b) The mooring arrangement should be such that the vessel will float freely, permitting accurate freeboard and draft readings.

(5) Weather.

(a) The combined adverse effect of wind, current, and sea may result in a difficult or even invalid survey due to inability to accurately record drafts and freeboards. In

6.D.2.c.(5) (a) (cont'd) some instances, unless conditions can be sufficiently improved by moving the vessel to a better location, it may be necessary to delay or postpone the survey. Preplanning should provide for this contingency.

(b) Any significant quantities of rain, snow, or ice must be removed from the vessel prior to the survey.

(6) Conducting the Survey.

(a) Inspect all "dry" tanks to ensure that they are in fact dry and free of liquids and debris.

(b) Sound all tanks containing liquids, and measure or otherwise determine the liquids' specific gravity.

(c) Walk through the vessel and record the weight and longitudinal center of gravity of each item to be completed, deducted, or relocated to simulate the vessel in its lightship condition.

(d) Measure and record freeboard readings at a minimum of five locations along the vessel, port and starboard. Read and record the forward, midship (if available) and after draft marks and record their location longitudinally. On major vessels with large freeboards, where the measuring tape may be exposed to the wind, the Coast Guard inspector or ABS surveyor must judge the accuracy of the readings. For these types of vessels, if the draft marks have been verified, the waterline based on the freeboards should be compared to that based on the draft marks to judge the accuracy of the freeboard readings. The final waterline should be determined based on both freeboard readings and draft marks. For small vessels, it may be necessary to counterbalance the list and trim effect of freeboard measuring parties.

(e) Measure and record the specific gravity of the water in which the vessel is floating.

(f) The person conducting the survey should assemble all field data and have the marine inspector (or ABS surveyor) initial each page. Blank forms for this purpose are included in Appendix A to NVIC 15-81. A copy of this data must be included with the deadweight survey report submitted to the MSC or the designated ABS technical office by the owner or the owner's representative.

(g) Document the outfitting of the vessel that is included as part of lightship. Especially with industrial vessels, such as MODU's, large items are often added, removed, or changed

6.D.2.c.(6) (g) (cont'd) during a vessel's service. Examples are lattice leg sections on MODU's and drilling related equipment. Since a detailed historical record of changes made to a vessel may not be maintained, the outfitting of a vessel at the time of a stability test or deadweight survey needs to be accurately documented.

3. Simplified Stabllity Tests For Small Passenger Vessels (46 CFR 171.030).

a. General. The following small passenger vessels Will normally be permitted to perform the simplified stability test described in 46 CFR 171.030 in lieu of an inclining experiment:

(1) "S" vessels carry ing 150 passengers or less on domestic voyages; and

(2) "S" vessels carry ing 12 passengers or less on international voyages.

b. Pontoon-type Vessels. Figures 6-2 and 6-3 outline the recommended procedures for a stability proof test for pontoon-type small passenger vessels under 65 feet in length and restricted to protected waters. Calculations based on the manufacturer's weight certificate may be accepted in lieu of a proof test. A proof test is to be used when the number of pontoons does not exceed two. On vessels with more than two pontoons, the MSC shall be consulted. The MSC will determine if stability can be evaluated with a proof test or if stability must be evaluated using an inclining experiment and calculations.

c. SOLAS Applicable Vessels. A simplified stability test may be substituted for the inclining experiment and for the stability calculations required by SOLAS provided exemptions from the stability requirements of SOLAS 74, as amended, are issued. Volume II of this manual (9.H.3.a) and SOLAS 74, Chapter II-1, Regulation 1.4, provide for such exemptions. All domestic requirements must be met to qualify for SOLAS exemptions.

4. Evaluation Of Weight Changes to Lightship. During its service life a vessel may be modified without changing its buoyant hull form. A complete inclining is required unless the changes are minor or do not adversely impact the vessel's stability. Weight calculations are acceptable if the MSC determines they are accurate, or acceptable penalties in VCG are applied to the calculations. The nature of the weights changed is critical to the accuracy of calculations. Often, miscellaneous changes with a total weight greater than 2 percent of lightship displacement will necessitate a deadweight survey (or even a complete inclining) to verify calculations. Weight changes should be combined for the total change,

6.D.4. (cont'd) when determining if a test is necessary, since the errors associated with weight additions and weight deletions are cumulative. If a deadweight survey proves the calculations to be inaccurate, a Complete inclining may be necessary.

E. Special Rules Pertaining to Specific Vessel Types.

1. Offshore Supply Vessels (Proposed 46 CFR 128.&4). In addition to the Weather Criterion required by 46 CFR 170.170, offshore supply vessels (OSV's) are required to meet additional intact stability standards because they carry cargo above the main deck, and because they are considered of unusual proportion and form (broad, shallow draft, hard-chined). As stated in 46 CFR 170.170(d), "the criterion specified in this section is generally limited in application to flush deck, mechanically powered vessels of ordinary proportions and form that carry cargo below the main deck. On other types of vessels, the MSC requires calculations in addition to those in paragraph (a) of this section." To satisfy this regulation, OSV's must submit calculations demonstrating compliance with either 46 CFR 170.173 or the following criterion (the proposed 46 CFR 128.4):

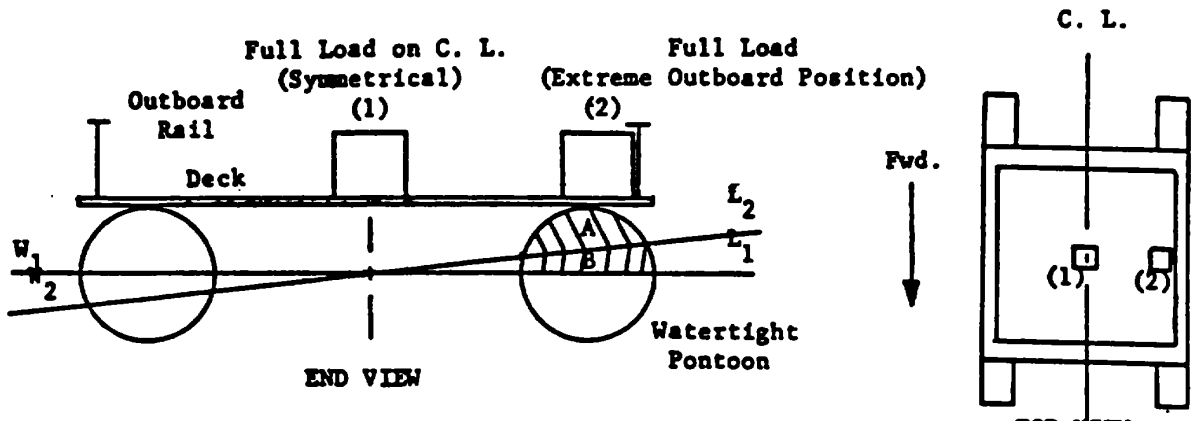

W_1L_1 = Water line for full load symmetrical athwartship loading.
W_2L_2 = Water line for full load, extreme outboard loading.

With load in extreme outboard position, position (2), area (A) must be equal to or greater than area (B).

FIGURE 6-2 TRANSVERSE STABILITY STANDARD

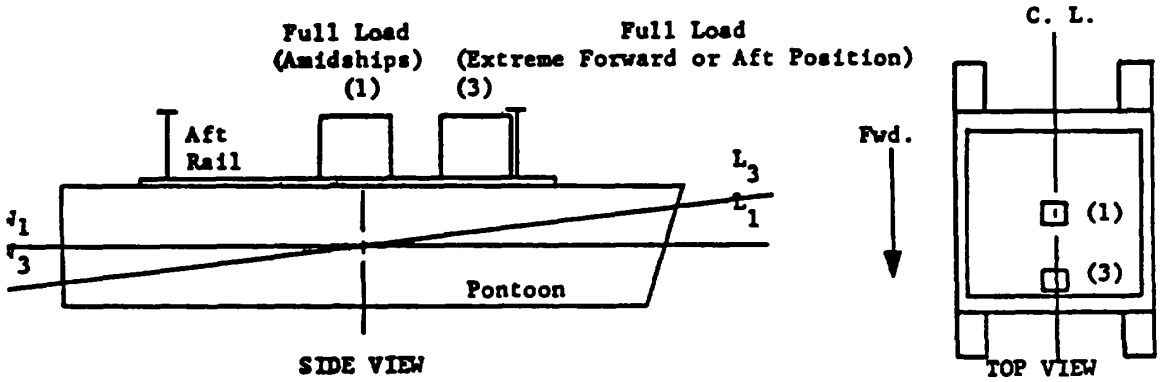

W_1L_1 = Water line for full load symmetrical longitudinal loading.
W_3L_3 = Water line for full load, loading at deck end, forward or aft.

With load in extreme forward or aft position, top of pontoon must not be submerged.

FIGURE 6-3 LONGITUDINAL STABILITY STANDARD

6.E.1. a. Righting Energy Criterion. In all operating conditions, the area under the righting arm curve must be at least 15 foot degrees to the least of the following angles:

(1) 40 degrees;

(2) The angle of maximum righting arm; and the angle of downflooding.

The righting arm curve is based upon the KG after correction for free surface. The angle of downflooding shall not be less than 20 degrees, and the angle of vanishing stability shall not be less than 40 degrees. Righting arm values may be calculated considering the trim of the vessel fixed (constant trim method). However, the more realistic method in which the vessel is allowed to trim as it heels (zero trimming moment method) is highly encouraged. For all loading conditions, the minimum freeboard at the stern shall not be less than that indicated by the table Below or the ABS geometric load line freeboard, whichever is less:

LBP (feet)	Stern Freeboard (inches)
less than 65	12
65 but less than 100	15
100 but less than 130	18
130 but less than 155	20
155 but less than 190	22
190 but less than 230	24
230 and greater	26

The angle of downflooding for this criterion is considered the angle at which the first nonwatertight opening is reached as a vessel heels. Tank vents equipped with ball check valves, watertight doors or hatches, etc., are not considered points of downflooding. Wooden plugs in cages are not considered as automatic watertight closures. Traditionally, the following values have been used in stability calculations relative to the placement of deck cargo:

VCG = 3 feet above the main deck; and
LCG = not more than 7-1/2 percent of the length of the cargo deck from the geometric center of the cargo deck.

b. Towline Pull Criterion. In addition to the intact stability requirements described in subparagraph 6.E.1.a above, a supply vessel that desires to tow must meet the towline pull criterion in 46 CFR 173.095.

6.E.2. Tugboats And towboats (46 CFR 174. Subpart E). No modifications need be made to the towline pull criterion in 66 CFR 173.095 for vessel fitted with "Kort nozzles," even though an increase in bollard pull may be experienced. The method in Figure 6-3.5 is to be used in the evaluation of Voith-Schneider type propulsion units.

Derivation of the Towline Pull Formulas for Twin and Single Voith-Schneider Propeller Tugs

- SUMMARY -

TOWLINE PULL CRITERION modified for Ref: 46 CFR 173.095(d)	VOITH - SCHNEIDER PROPELLER(s)	
Towline Pull	Twin Propellers	Single Propeller
STATIC	$GM_r = \dfrac{SHP \cdot L_t \cdot h \cdot B}{160 \cdot L_1 \cdot \Delta \cdot f}$	$GM_r = \dfrac{SHP \cdot h^2 \cdot B}{80\,(h + L_1) \cdot \Delta \cdot f}$
DYNAMIC	$HA = \dfrac{SHP \cdot L_t \cdot h}{80 \cdot L_1 \cdot \Delta} \cos\theta$	$HA = \dfrac{SHP \cdot h^2}{40\,(h + L_1) \cdot \Delta} \cos\theta$

Where: SHP = total shaft horsepower
h = vertical distance (in feet) from the Thrust plane to the towing "bitt"
B = molded beam (in feet)
f = minimum freeboard (in feet) along the length of the vessel
Δ = displacement (in long tons)
L_t = transverse separation (in feet) between the two propeller centerlines
L_1 = longitudinal sepatational (in feet) between the towing "bitt" and the centerline of a single propeller or the midpoint of L_t
θ = angle of heel

1. TWIN PROPELLER FORMULAS:

a. STATIC CRITERIA

$$GM_r = \frac{F \cdot h}{\Delta \cdot \tan\theta}$$

h = vertical reaction arm (feet)
= displacement (long tons)
θ = angle to heel to 1/2 the minimum freeboard
where;

$$\tan\theta = \frac{f/2}{B/2}$$

$$\therefore \quad \tan\theta = \frac{f}{B}$$

f = minimum freeboard (feet)
B = beam (feet)
F = thrust applied to the vertical reaction arm.

FIGURE 6-3.5

To determine " F " :

LET;

T = total Thrust developed by both engines
(T/2 = thrust of 1 engine)

M_{sx} = Sum of yawl moments about point "x"
- the intersection of the lines connecting the centers of the V-S props with the centerline of the vessel.

$$M_{sx} = (T/2 \cdot L_t/2) \cdot 2$$

$$= T \cdot L_t/2 \qquad \text{Eqn. (1)}$$

This is equivalent to a Force "F" acting perpendicular to a point directly below the towing "bitt", through a distance of L_1.

$$M_{sx} = F \cdot L_1 \qquad \text{Eqn. (2)}$$

Equating Eqn (1) to Eqn (2), we get;

$$F \cdot L_1 = \frac{T \cdot L_t}{2} \qquad \text{or}$$

$$F = \frac{T \cdot L_t}{2 \cdot L_1}$$

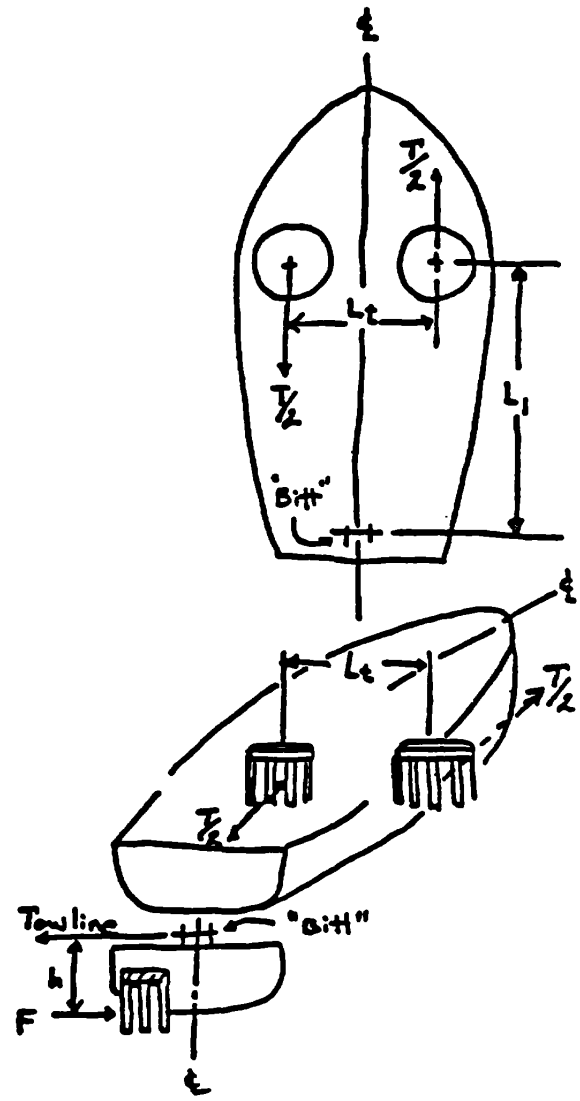

T = total thrust
L_t = transverse separation (feet) of V-S propellers
L_1 = longitudinal distance (feet) from center of L_t to vertical plane of towing "bitt"

FIGURE 6-3.5 (cont'd)

"T" is assumed to be: $\frac{\text{SHP (total of both props)}}{80}$

This is derived from the limited data we have on the present applications of the Voith-Schneider system.

$$F = \frac{\frac{SHP}{80} \cdot L_t}{2\ L_1}$$

$$F = \frac{SHP \cdot L_t}{160 \cdot L_1}$$

Substituting "F" back into the GM_r equation

$$GM_r = \frac{F \cdot h}{\Delta \cdot \tan\theta} \longrightarrow \frac{\frac{SHP}{160} \cdot \frac{L_t}{L_1} \cdot h}{\Delta \cdot \frac{f}{B}}$$

$$GM_r = \frac{SHP \cdot L_t \cdot h \cdot B}{160 \cdot L_1 \cdot \Delta \cdot f}$$

b. DYNAMIC CRITERIA

$$HA = \frac{2 \cdot F \cdot h}{\Delta} \cdot \cos\theta$$

F = Thrust applied to the vertical reaction arm
h = Vertical reaction arm (feet)
2 = Factor for "dynamic" actions [wind, waves, etc.]
θ = Angle of heel

$$HA = 2 \cdot \frac{SHP}{160} \cdot \frac{L_t}{L_1} \cdot \frac{h}{\Delta} \cdot \cos\theta$$

$$HA = \frac{SHP \cdot L_t \cdot h}{80 \cdot L_1 \cdot \Delta} \cdot \cos\theta$$

2. SINGLE PROPELLER FORMULA:

c. STATIC CRITERIA:

$$GM_r = \frac{F \cdot h}{\Delta \cdot \tan\theta}$$

FIGURE 6-3.5 (cont'd)

All terms are define the same as before. However, the force "F" term is derived below;

$$F = \bar{T} \cdot \frac{h}{h + L_1}$$

T = Total thrust = $\frac{SHP}{80}$

h = Vertical reaction arm (feet)

L_1 = longitudinal distance (feet) from propeller center to the vertical plane (in the transverse direction) of the towing "bitt"

$\frac{h}{h + L_1}$ = Linear distribution factor for the force applied to the reaction arm

$$GM_T = \frac{F \cdot h}{\Delta \cdot \tan \theta}$$

$$GM_T = \frac{\frac{SHP}{80} \cdot \frac{h}{h + L_1}}{\Delta \cdot \frac{f}{B}} \cdot h$$

$$GM_T = \frac{SHP \cdot h^2 \cdot B}{80 \cdot (h + L_1) \cdot \Delta \cdot f}$$

d. DYNAMIC CRITERIA

$$HA = \frac{2 \cdot F \cdot h}{\Delta} \cdot \cos \theta$$

$$HA = \frac{2 \cdot \frac{SHP}{80} \cdot \frac{h}{h + L_1} \cdot h}{\Delta} \cdot \cos \theta$$

$$HA = \frac{SHP \cdot h^2}{40 \cdot \Delta \cdot (h + L_1)} \cdot \cos \theta$$

FIGURE 6-3.5 (cont'd)

6.E.3. Monohull Sailing Vessels And Auxiliary Sailing Vessels (46 CFR 171). The requirements for monohull sailing vessels and auxiliary sailing vessels in 46 CFR 171 have been developed for sailing vessels carry ing passengers. The basic principals under which they were developed can, however, be applied to other sailing vessels such as chose certificated under 46 CFR, Subchapter I. It is conceivable that, if a cargo sailing vessel could not fully comply with the criteria as written, operational restrictions could be imposed commensurate with the knowledge and skill of the operators. The standards in 46 CFR 171.055 are applicable to all sailing vessels not meeting the criteria for small sailing vessels in 46 CFR 171.035.

a. Stability Test. Each vessel in this category must undergo a stability test under 46 CFR 170, Subpart F.

b. Plans Required In Addition to 46 CFR 170.072.

(1) Righting arm curves calculated using the zero trimming moment method must be developed and submitted. Credit may be given for superstructure if all openings are watertight and if ports are of substantial construction. The worst case must be used for an asymmetrical deck arrangement. The KG that the curves were based on should be indicated on the plan.

(2) A sail plan showing the sails to be carried, trimmed flat, on a full vessel profile should be submitted. The following information should accompany the sail plan:

(a) Name of each sail;

(b) Centroid and area of each sail;

(c) Centroid and area of the portion of the vessel above the designed waterline;

(d) Centroid of the underwater portion of the hull; and

(e) Centroid and area of any furled sails, bare poles, lowered rigging, etc., to be included when computing the vessel area when the sails are doused.

c. Stability Calculations.

(1) Vessels of usual form, proportion, and rig must submit calculations showing that the following intact stability requirements have been met. In the case of unusually shaped vessels, such as catamarans and trimarans, application of these standards may be impractical and other calculations may be required by the MSC.

6.E.3.c. (2) The vessel must meet the initial GH-Required Weather Criterion in 46 CPR 170.170. 46 CFR 170.170(c) specifies the assumed condition for these calculations.

(3) The vessel's range of stability must be as required by 46 CFR 171.055(c).

(4) The adequacy of the vessel's righting arm curve, as related to the sail area, must be verified by application of the criteria in 46 CFR 171.055(d) through (g). These criteria require three conditions to be considered:

(a) Condition A, or the "Comfortable Condition," requires the vessel to have sufficient initial stability to carry its sail comfortably in normal weather;

(b) Condition B, or the "Safe Condition," requires the vessel to have sufficient stability to resist gust and squall conditions without rolling to the point of downflooding or to a maximum angle of 60 degrees, the angle at which cabin gear is assumed to begin breaking loose; and

(c) Condition C, or the "Knockdown Condition," requires the vessel to be able to survive if brought to extremis.

(5) The following procedures may be followed to demonstrate compliance with the conditions described above. Sketches showing the various criteria are provided in Graphs 46 CFR 171.055(a)-(e) in Subchapter S:

(a) Determine the most severe (least favorable) operating condition consistent with normal operations and plot the vessel's righting arm curve to:

(i) 90 degrees, if the angle of vanishing stability is equal to or less than 90 degrees;

(ii) The angle of vanishing positive stability, if that angle exceeds 90 degrees but is less than 120 degrees;

(iii) 120 degrees, if the angle of vanishing stability exceeds that value.

(b) If the angle at which the maximum righting arm occurs is less than 35 degrees, the curve is truncated so that the maximum is no more than the value of 35 degrees (See Graph 46 CFR 171.055(a)).

6.E.3.c.(5) (c) Condition A (Shown In Graph 46 CPa 171.05(b)). Determine the angle to deck edge immersion (t), with trim considered, and mark the point (HZ) at which this angle intersects the righting arm curve. Calculate HZA (the heeling arm at zero degrees) from the following formula:

$$HZ = HZA \cos 2(T).$$

(d) Condition E (Shown In Graph 46 CFR 171.055(c)). Compute HZB so that the area under the righting arm curve equals the area under the heeling arm curve both taken to the downflooding angle or 60 degrees, whichever is less. The heeling arm curve has the form:

$$HZ = HZB \cos 2(T).$$

[NOTE: HZB can be calculated from the following equation (see 46 CFR 171.055(g)):

$$HZB = \frac{I}{(T/2) + 14.3 \sin 2t}$$

Where: I equals the area under the righting arm curve to the downflooding angle or 60, whichever is less.]

(e) Condition C (Shown In Graph 4~ CFR 171.055(d) And (e)). Compute HZC so that the area under the righting arm curve equals that area under the heeling arm curve. The heeling arm curve is of the form:

$$HZ = HZC \cos 2(T).$$

If the positive range of stability is less than 90 degrees, take the areas up to 90 degrees (see Graph 46 CFR 171.055(d)) considering the area of the righting arm curve, after the curve goes negative, as a "negative area" in obtaining the balance. If the range is greater than 90 degrees, take the area under the righting arm curve to the maximum angle of positive stability, but not greater than 120 degrees (see Graph 46 CFR 171.055(e)).
[NOTE: HZC can be calculated from the following equation, considering the wind heeling moment is zero past 90 degrees (see 46 CFR 171.055(g)):

$$HZC = \frac{I}{(T/2) + 14.3 \sin 2T} = \frac{I}{45}$$

Where: I equals the area under the righting arm curve up to the allowed angle (between 90 degrees and 120 degrees.]

6.E.3.c.(5) (f) The values of HZA, HZB, and HZC are then used in the equations in 46 CFR 171.055(d) to determine compliance with the stability standards. If any one of the standards is not satisfied, the vessel must be modified. One or more of the following may be changed to accomplish compliance: ballast, sail plan, downflooding point, or loading conditions.

(6) For the purpose of computing sail area, squaresails need not be braced to the point where the yard becomes parallel to the centerline if positive stops limit the angle of yard rotation. Stops shall be such that they cannot be removed.

(7) The use of 60 degrees for HZB, when the downflooding angle is greater than 60 degrees, is subject to the determination of the MSC and the OCMI. Normally, the 60 degree limitation is necessary when it has not been demonstrated to the satisfaction of the MSC and the OCMI that major weights such as ballast will not shift (break loose) at heel angles up to the angle of downflooding.

(8) The stability letter should refer to the sail plan floor which calculations are approved. Any loading condition which relies on reefing of sails should be approved by the OCMI, who must be satisfied that such provisions will be followed at all times. Generally, operational restrictions are subject to abuse and should be discouraged.

(9) Sail-assisted vessels (primary mode of propulsion is power, rather than sail) may use 46 CFR 170. 170, in lieu of the sailing criteria in 46 CFR 171.055. Compliance with 46 CFR 170.170 with all sails set is equivalent to compliance by a vessel with a superstructure of the same size.

d. Bare Poles Criteria For Certain Small Auxiliary Sailing Vessels. Some small vessels (less than 65 feet LOD) are required to have the calculations of 46 CFR 171.055 applied due to special circumstances such as night operation. In lieu of compliance with 46 CFR 170.170 for the bare poles condition, these vessels may continue to use the simplified test in 46 CFR 171.030 to prove stability under bare poles. This is because the vessel is a motor vessel when under bare poles, and as a motor vessel, compliance with 46 CFR 170.170 or 171.055 is no.t required.

4. Mobile Offshore Drilling Units (46 CFR 174, Subpart C).

a. Stability While On the Bottom. When demonstrating compliance with the requirements of 46 CFR 174.050, the magnitude of the current used in calculations may be at the discretion of the designer. However, the MODU's operating booklet should indicate the combination of wind, wave, and current limits to be used as service restrictions.

6.E.4. a. (cont'd) Alternative wave loadings to those in the ABS Rules for Mobile Offshore Drilling Units, 1973, Appendix A (Parts 1 & 2) may be employed. Such calculations should utilize recent state-of-the-art procedures. Whatever design methods are employed, the least stable condition should be identified and evaluated with a combination of environmental forces and live and deadweight loads. Detailed calculations need not be submitted for review. However, basic information pertinent to stability on the bottom such as assumptions, methods of calculation, input data, results, and conclusions should be included in the submittal.

b. Lightship Determination. There is no standard for which the semi-permanent drilling equipment should be included in the lightship of a drilling unit and which is carried as part of the variable load. Therefore, the operating manual for each unit should have a comprehensive listing of the inclusions and exclusions for the instruction of the operator. This is normally placed in the section which lists the lightship data. Table 6.E.4.b. is a list of equipment which should be specifically listed as either included or excluded from the lightship definition if that equipment will be on the unit.

TABLE 6.E.4.b.

MODU Drilling Equipment to be Specifically Listed as Included or Excluded from Lightship

Spider deck (if movable)
Riser tensioners
Guideline tensioners and tuggers
Tensioner and heave compensator air receivers
Drill string heave compensators
Power unit for tensioners and compensators
Substructure
Drilling Derrick
Drawworks (with up or down specified if applicable)
Rotary
Stand pipe manifold and hoses
Kill and choke manifold
Cementing Unit
Mud pumping system
Mud reclaiming unit
Possum belly and degasser unit
Mud agitators
Drilling power diesel generators
Mooring winches wire
Well logging unit
Flare booms
Legs (self-elevating units)
All tools and loose drilling equipment
Blow out preventers (BOP)

6.E.4.b. (cont'd)

Diving equipment
Portable mud process lab
Spare drill line reel
Anchors and anchor chain

c. Freeboard Assignment. For semi-submersible drilling units, the minimum freehoard assignment cannot be computed by the normal methods given in the 1966 International Convention on Load Lines. The freeboard is determined on the basis of meeting the applicable intact stability, damage stability and structural requirements.

d. Operating Manual (46 CFR 109.121 and 170.130). The stability and structural loading information required by the load line regulations (46 CFR 42.15-1) is provided in the operating manual for mobile offshore drilling units. In reviewing the manual the following should be considered:

(1) The stability criteria for mobile drilling units is normally met by adjusting the unit's variable load weight and vertical center of gravity. Occasionally other limitations such as trim limitations are assumed in the stability analysis.

(2) Stability calculations might not he submitted for the severe storm in the afloat mode if the designer of a bottom bearing unit intends to set it on the bottom in the event of a storm during a tow. This is normally seen in the case of submersible units. In such cases operation afloat is limited to within 12 hours of water depth where the unit may he set down and appropriate instructions should be provided in the manual.

(3) Approval of the structural strength of the unit is based upon loads calculated from assumed environmental conditions. The unit's structural strength may limit its operations more than stability considerations. If different work groups review stability and structure, then joint review of the operating manual is required.

(4) The regulations do not permit the operating manual to contain a normal operating condition which cannot meet the intact stability with a 70 knot wind, or the damage criteria with a 50 knot wind. Some self-elevating units cannot meet this criteria with their legs fully raised. In such cases, the manuals should specify that the upper leg sections must be removed when the unit is preparing for shallow draft operations.

(5) A self-elevating drilling unit does not always improve its stability by lowering its legs. Lowering the legs increases the righting moment by lowering the KG. It also reduces the wind

6.E.4.d. (5) (cont'd) heel moment by reducing the area exposed to the wind. However, lowering the legs lowers the effective center of underwater area. In units with a large mat, the increase of the lever arm for the overturning moment due to this lowering of the underwater center of gravity may be the dominant effect. Therefore, the full range of leg lengths permitted by the operating manual for transit afloat conditions must be investigated in the stability study.

(6) A bottom bearing unit is not required to meet the 70 knot normal operating condition wind criteria when it is jacking legs down or flooding down to make contact with the bottom or coming off bottom. This operation is conducted only during calm weather as specified in the operating manual. There is no specific requirement that the designer submit stability calculations for these transitory conditions. However, the reviewer should insure that the unit will have at least 50 cm (2 inches) of positive GM (46 CFR 170.040) and that it complies with the 1.4 area ratio of 46 CFR 174.045, calculated for the maximum wind permitted by the operating manual for all intermediate conditions specified in the manual.

(7) In addition to the structural and stability considerations, the operating manual must also meet the requirements of 46 CFR 109.121 before it is approved. If the unit is to receive an International Maritime Organization (IMO) Mobile Offshore Drilling Unit SAFETY Certificate, the manual and stability study must beet the additional requirements in Chapters 3 and 14 of IMO Resolution A.414(XI), Code for the Construction and Equipment of Mobile Offshore Drilling Units. Figure 6-4 is a list of items which are considered necessary for a manual to satisfy these requirements.

FIGURE 6-4

NECESSARY ITEMS TO BE INCLUDED IN AN OPERATING MANUAL FOR MODU'S

A. General Description of the Unit

1. Major Dimensions and Heights

2. Allowable Deck Loadings Listed or Shown on Plan

3. Hook Load Capacities

4. Lightship Data

a. Description of Major Equipment Included in Lightship Data

b. Permanent Ballast Listed or Shown on Plan

c. Based Upon Approved Inclinings. Deadweight Survey and/or Calculations

d. Designate Largest Aircraft Permitted on Helicopter Deck

B. Jacking Gear Data and Limitations

1. Normal Jacking Speed in Feet/Minute

C. General Arrangement Drawings

1. Watertight Compartments Shown

2. Watertight Closures Shown

3. Vents Shown

4. Required Drawings

a. Are Secured in Manual

b. Can Be Used Without Being Detached From Manual

D. Stability Information

1. Intact and Damaged Stability Requirements from Assumptions Used in Study

a. Any Doors Which Must be Kept Closed at Sea

2. Maximum Permissible KG Versus Draft Curves or Equivalent instructions

FIGURE 6-4 (cont'd)

NECESSARY ITEMS TO BE INCLUDED IN AN OPERATING MANUAL FOR MODU'S

a. Consistent with Approved Stability Study

b. No Normal Operating Condition With Wind Speed Less than 70 kt (new)

. c. No Normal Operating Condition With Wind Speed Less than 50 kt (certain existing MODU's)

3. Examples of Loading Conditions for Each Mode of Operation

a. Storm

b. Drilling

c. Transit

4. Means of Evaluating Other Loading Conditions

a. Instructions for Use in Stability and Loading Calculations

5. Hydrostatic Curves or Tables

a. Location of Draft Marks Specified

b. Instructions for Use

6. Tank tables

a. Capacities

b. Centers of Gravity (LCG, VCC, TCG (transverse center of gravity))

c. Free Surface Corrections

d. Instructions for Use

E. Guidance for Safe Operations Under Normal Conditions

1. Inherent Limitations of Operation for Each Operating Mode

2. Design Loading for Each Operating'Hode

a. Design Load

b. Wave Height Limitations

FIGURE 6-4 (cont'd)

NECESSARY ITEMS TO BE INCLUDED IN AN OPERATING MANUAL FOR MODU'S

c. Current Velocity

d. Wind Limitations

e. Operating Draft/Depth of Water Limits

f. Allowable KG

g. Maximum Limits of Trim

3. Instructions for Change of Operating Conditions (Mode)

a. Preparations for Making a Move

b. Ballasting instructions

F. Guidance for Safe Operation Under Emergency Conditions

1. Instructions for Passage of Severe Storm

a. Definition of Severe Storm Weather Conditions

b. Specific Actions Necessary

c. Approximate length of time necessary to attain each stage

2. General Guidance and Precautions Regarding Unintentional Flooding

a. Determine Cause of Unexpected Heel Before Corrective Action

G. Table of Contents

H. Index

6.E.4. e. Shipshape MODU's amy use a cosine function to determine the wind heeling arm. Other types must determine actual projected areas as the vessel rolls.

f. The wind moment may be derived with special methods approved by the MSC. Wind tunnel testing is acceptable in principle.

g. The optimization for maximum allowable KG is a careful balance among righting arms, wind heel arms, and downflooding angle. The critical azimuth angle will not necessarily be that azimuth angle which gives the least angle of downflooding.

h. 50 knot wind intact loading conditions may be allowed only for limited cases such as harbor transit. Normal operating conditions, including site re-location, must meet at least the 70 knot wind criterion.

5. Barges (46 CFR Part 172 And Part 174. Subpart B).

a. General. Stability tests will not be required for most barges, since the center of gravity and weight of the light vessel can be determined from close weight estimates and vessel geometry. As stated in 46 CFR 170.200, certain tank barges may assume a lightweight VCG of 0.6 times the molded depth for the purposes of performing the applicable stability calculations in lieu of being inclined. The effective depth of barges with tank tops raised above the weather deck shall be measured to the tops of the tanks for stability calculations. The assumption that the lightweight VCG of barges is 0.6 times the depth is based on outfitting with small deck houses or small amounts of deck equipment, such as piping and a cargo pumping system. Barges fitted with large amounts of deck equipment, or intended to carry deck cargo, should have the VCG determined in a manner acceptable to the MSC. The Coast Guard may require a stability test on any barge when the size or complexity of the barge warrants it, or when there are large unknown quantities (e.g., a derrick barge with a derrick that does not have detailed manufacturer's information as to weight and center of gravity). Although VCG may be estimated due to simple proportion and form, the MSC may require a deathweight survey where necessary to establish the lightweight. In general, barges in ocean service should undergo a deadweight survey. Required stability calculations must be performed for the worst case of loading that is permitted by the stability guidance provided to the operator.

b. Intact And Damage Stability Criteria By Barge Type.

(1) All Barges: Weather Criterion And Righting Energy. The weather criterion in 46 CFR 170, Subpart E applies to barges, except as specified in 46 CFR 170.160. Inland tank barges inspected under Subchapter D do not have specific stability requirements but may be loaded beyond safe limits when they do not have centerline bulkheads in way of cargo. The OCMI should be so notified in such cases. Due to their large B/D ratio and high draft to depth ratio, most inland barges cannot be evaluated considering GM

6.E.5.b. (1) (cont'd) alone, in which case righting energy calculations are appropriate. As stated in 46 CFR 170.170(d), additional calculations must be submitted for barges. Except as provided in subparagraphs 6.E.5.b.(2), (3), and (4) below, the calculations normally required are those contained in 46 CFR 174.015. Suitable route alternatives to 46 CFR 174.015 include reducing the required 15 foot-degrees to 5 foot-degrees for service on protected waters and to 10 foot-degrees for service on those lakes, bays, and sounds which the OCMI considers to be partially-protected.

(2) Tank Barges. The stability of tank barges (other than dangerous cargo barges) is normally acceptable without calculations if the barge is of conventional type, carries all cargo below the main deck, has an oiltight or watertight centerline bulkhead in way of cargo compartments, carries no more than 1/3 of the tank pairs slack, and has a load line draft-to-depth ratio no greater than 0.85. These conditions apply to all routes. When a load line is not issued, a draft to depth ratio of 0.85 is still valid. When the draft exceeds 0.85 times the depth, the OCMI may question stability, in which case righting energy calculations should be performed. A simplified method of ensuring compliance with righting energy criteria that does not require computer work may be used at the option of the OCI. In assisting an OCMI on questioning the stability of inland barges in 1988, G-MTH developed a simple method of determining the freeboard for barges of typical proportion for them to comply with intact righting energy criteria.

(3) Dangerous Cargo Barges F46 CFR 172.090 And 172.095).

(a) In lieu of the stability criterion specified in 46 CFR 174.015, dangerous cargo barges must meet the intact transverse and intact longitudinal stability requirements of 46 CFR 172.090 and 172.095. It is important to note that 46 CFR 172.087(b) requires that, for all loading conditions, each cargo tank must be assumed to have its maximum free surface.

(b) Dangerous cargo bartes are designated by hull type (I, II, or III); a type I hull has the severest stability requirements. Stability calculations must be performed for the hull types required by the cargoes anticipated to be carried. For each hull type, two conditions must normally be investigated to see which yields the highest full load VCC corrected for free surface (VCG of barge and cargo + free surface effect). The first condition is fully loaded with the highest specific gravity cargo requested. The free surface effect to be taken is as specified above, adjusted for the highest specific gravity cargo (i.e., I/V x s.g. of the highest density cargo requested). The second condition is fully loaded with the design specific gravity cargo,

6.E.5.b.(3) (b) (cont'd) usually 1.05. In this second case, the full load VCG will be higher and the free surface effect less. The highest resulting VCG should be used in applying the applicable stability criteria.

(c) A reasonably conservative value of lightship VCG should be assumed for all calculations. 0.6 times the depth of the barge is recommended; a higher value may be necessary for trunked barges.

(d) Seagoing barges carry ing oil and noxious liquid substances require damage stability calculations (46 CFR 172 Subparts C,D,E,F).

(e) Damage Stability Criteria. For barges of the open hopper type, not equipped with a weathertight (rainshield) deck, 46 CFR 172.100 and 172.104 are considered separate requirements. These vessels, therefore, need fist meet damage stability with the hoppers flooded with rainwater. Removing rainwater is considered a manageable operational problem, as these barges are often draft-limited over lock sills, etc., (see 46 CFR 35.01-45(c)(2)). 46 CFR 172.105 was intended to apply to barges in inland service experiencing low energy collisions; thus, the transverse extent of collision damage was limited to 30 inches. Both the Coast Guard standard and the internationally accepted standard for ocean-going damage penetration is B/5 (where B is the beam of the barge). Until a regulatory change is completed, designers should be encouraged to investigate the survivability of these barges assuming a B/5 penetration.

(4) Dry Cargo Barges (Within Hull Only). Barges that carry only nonshifting dry cargo below the main deck do not have to demonstrate compliance with the criterion in 46 CFR 174.015. Non-shifting dry cargo is normally composed of break bulk solids (items that are normally restrained by lashings or dunnage). Operating instructions are appropriate for dry cargo that is assumed not to shift to ensure that it doesn't shift in a seaway. The carriage of bulk materials such as cement, sugar, and grain is discussed in 6.E.6 and may require special consideration. Cargoes such as coal, gravel, phosphate, and other pelletized bulk cargoes will often not fill cargo spaces and may shift during the voyage, especially when operating on exposed and partially protected waters. Such cargoes should be considered on a case by case basis (see 46 CFR 97.12 for further information on bulk cargoes). The following simplified methods for ensuring that such cargoes do not shift have been accepted, in lieu of requiring a stability analysis and stability booklet based on the maximum volumetric heeling moment procedures contained in SOLAS for bulk grain.

(a) The cargo holds must be completely full and trimmed level or completely empty; or

6.E.5.b.(4) (b) The angle of repose, as determined by the IMO "Code of Safe Practice for Bulk Cargoes" (1987) or by using the tilt box method, must be equal to or greater than 35 degrees and the cargo must be either trimmed level, secured with wire mesh, or overstowed with bagged cargo. The tilt box test method is described in an appendix to the IMO Code mentioned above and is suitable for non-cohesive granular materials having a grain size not greater than 10 mm.

(5) Deck Cargo Barges (46 CFR 174.015 And 174.020). The following simplified methods apply only when liquids are not carried below deck or above deck. Likewise, cargo which can shift precludes using these methods. The righting energy criterion in 46 CFR 174.015 must be used for vessels with deadweight that can shift in service. Shifting of deadweight must be accounted for in the calculations.

(a) In accordance with 46 CFR 174.020, stability calculations for a deck cargo barge need not be submitted if it falls within the ratios in 46 CFR table 174.020 and accepts a limiting cargo height restriction. The draft is usually that which corresponds to the ABS geometric load line. However, if that draft results in a ratio outside the table, the draft may be reduced to the necessary value if acceptable to the owner/designer. The letter from the MSC authorizing the load line will specify the limiting draft and the maximum cargo height, which will be placed on the face of the Load Line Certificate.

(b) If the barge does not satisfy these provisions, or the resulting restrictions are not acceptable to the owner/designer but the barge has a beam-to-depth ratio between 3.00 and 6.00, a draft-to-depth ratio equal to or less than 0.85, and a desired maximum cargo height less than 30 feet, the minimum metacentric height (GM) required for satisfactory stability at any particular draft may be obtained from the graphs in Figures 6-5 or 6-6, depending on the intended service route. Based on this minimum metacentric height, a maximum allowable cargo height at the load line draft can be established. The graphs may also be used to determine maximum draft to depth ratios in cases where greater cargo heights are desired with loadings at less than full load draft. The required GM values obtained from the graphs must be increased by 1 foot for manned barges. To perform a stability check by this method, five items of information are required: length, beam, depth, load line draft, and block coefficient. The following is a sample calculation performed by this method in order to calculate the maximum allowable cargo height at a particular draft:

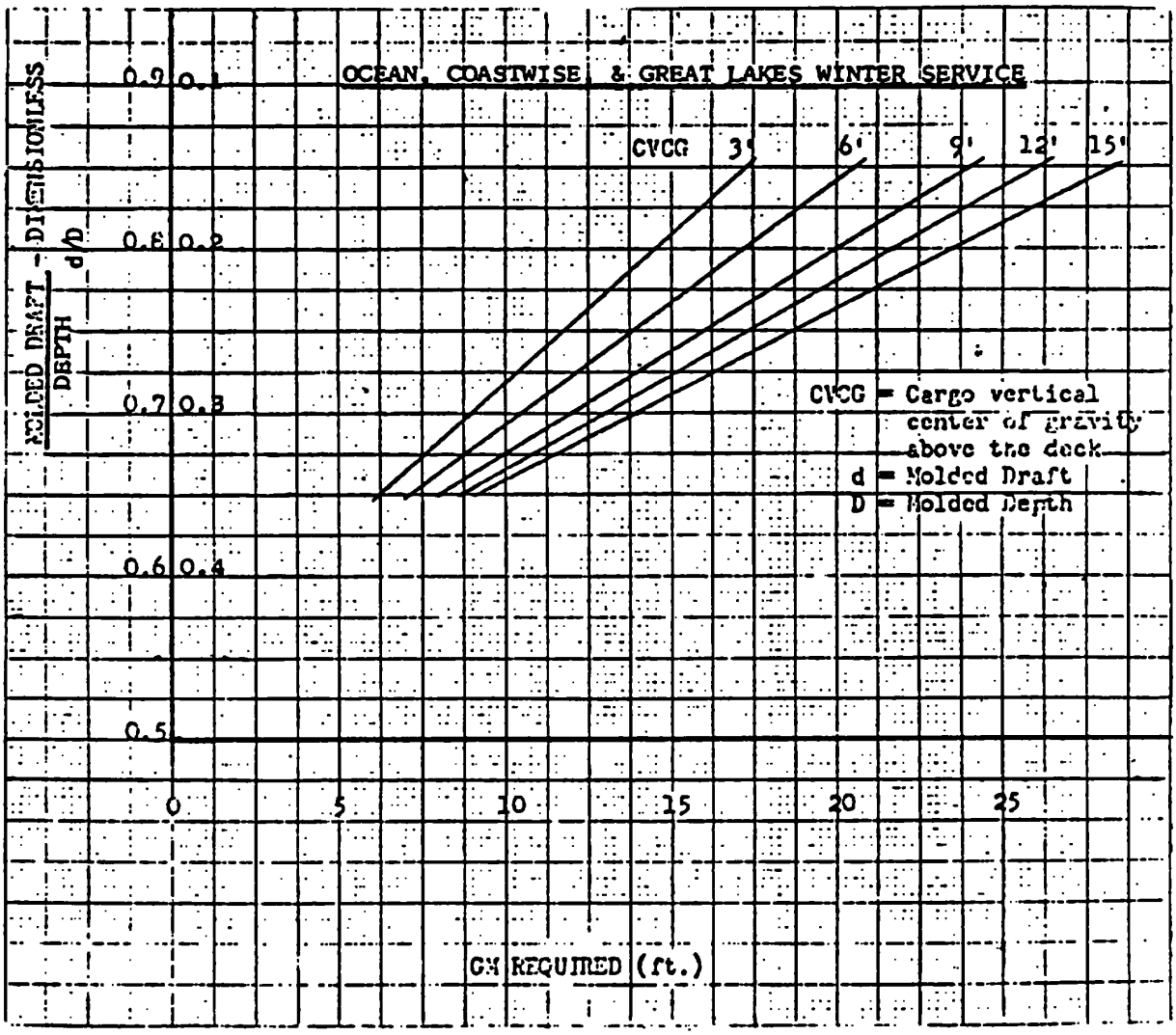

FIGURE 6-5 GM VALUES FOR DECK CARGO BARGES IN OCEAN, COASTWISE, AND GREAT LAKES WINTER SERVICE

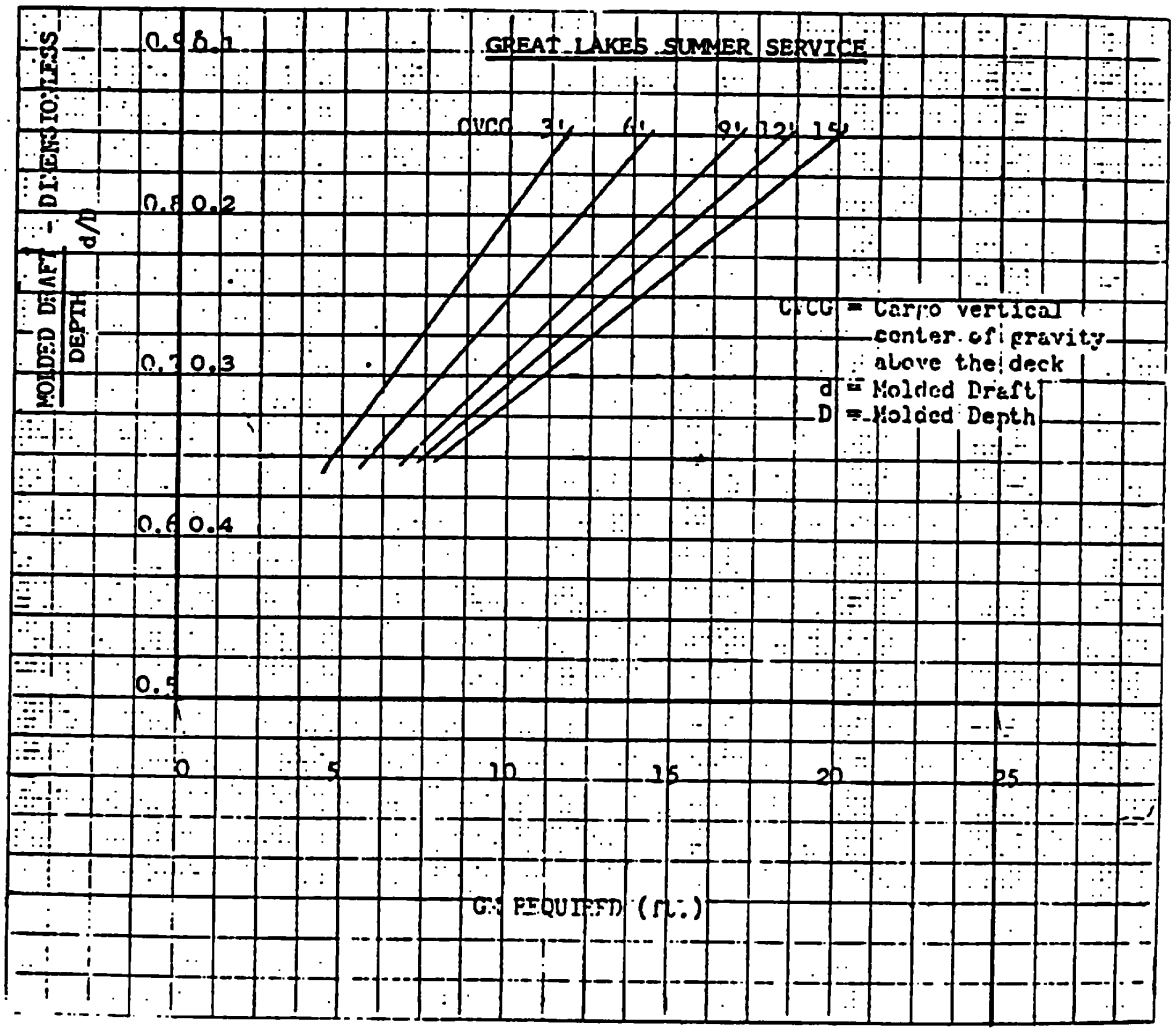

FIGURE 6-6 GM VALUES FOR DECK CARGO BARGES IN GREAT LAKES SUMMER SERVICE

6.E.5.b.(5)(b) (cont'd)

Barge Particulars

L = 259.2
B = 68.0
D = 19.0
Cb = .89
d = 15.2 (ABS preliminary load line)

$$est = \frac{L \times B \times d \times Cb}{35}$$

$$est = \frac{259.2 \times 68.0 \times 15.2 \times .89}{35}$$

est = 6812.5

EST. LIGHTSHIP WT = (0.003 + 1/10L) L x B x D
= (0.003 + 1/2592) (259.2) (68) (19.0)
= 1133.9 tons

LTSHIP VCG = D/2 = 9.5 ft: (Lightship VCG may be assumed at mid-depth but the effective depth for stability calculations must be taken to the highest point of structure, including tank tops on vessels with tank tops raised above the weather deck.)

CARGO WT = est - LtSHIP WT - 6812.5 - 1133.9 = 5678.6

3 FOOT CARGO VCG

Weight	Lever	Moment
1133.9	9.5	10772.05
5678.6	22.0	124929.20
6812.5		135701.25

$$KG = \frac{\text{total moment}}{\text{total weight}} = \frac{135701.25}{6812.5} = 19.9$$

6 FOOT CARGO VCG

Weight	Lever	Moment
1133.9	9.5	10772.05
5678.6	25.0	141965.00
6812.5		152737.05

KG = 22.4

9 FOOT CARGO VCG

Weight	Lever	Moment
1133.9	9.5	10772.05
5678.6	28.0	159000.80
6812.5		169772.85

KG = 24.9

6.E.5.b.(5)(b) (cont'd)

KB = d/2 = 7.6

$$BM = \frac{B^2}{12d\ Cb}$$

BM = 28.5

KM = KB + BM = 36.1

d/D = .80

GM = KM - KG

GM = 36.1 - 19.9 = 16.2 (For 3 feet cargo VCG)

FOR OCEAN SERVICE

Cargo VCG	Actual GM	Required GM (from curves)
3 feet	16.2	14.5
6 feet	13.7	17.3
9 feet	11.2	20.0

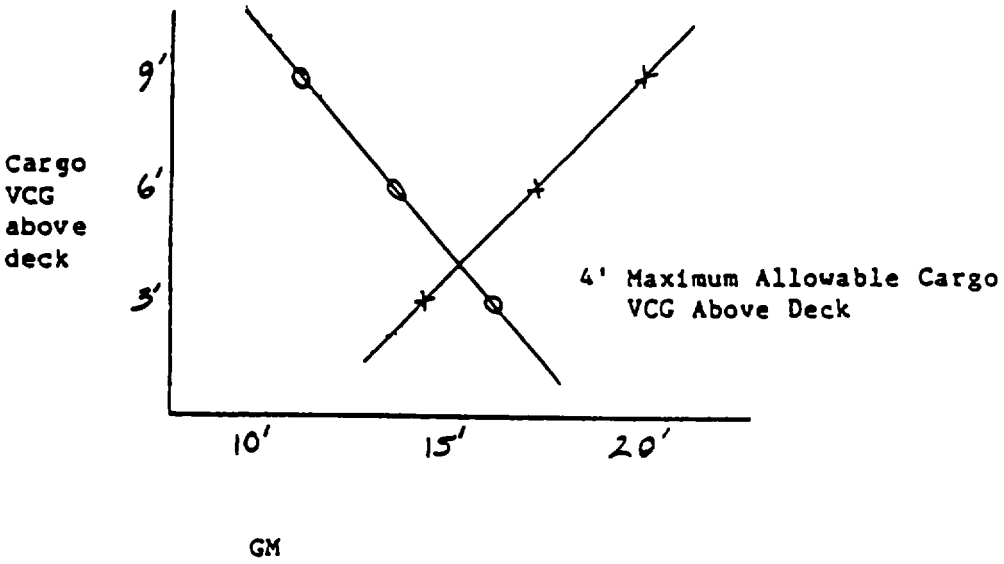

The resulting restriction to be placed on the Load Line Certificate is a maximum cargo VCG of 4 feet above the deck or a maximum cargo height of 8 feet.

6.E.5.b.(5) (c) If neither of the methods specified in subparagraphs 6.E.5.b.(5)(a) and (b) are suitable, because of the dimensions of the barge or the desires of the owner/designer, the maximum allowable cargo height(s) must be calculated based upon either the weather criterion (46 CFR 170.170) or the stability criterion of 46 CFR 174.015, whichever is controlling.

(6) Open Hopper Barges. In applying the stability criteria in 46 CFR 174.015 to open hopper barges, the following apply:

(a) The dredged material is a homogeneous liquid with a specific gravity of 2.0;

(b) The free surface effect of the dredged cargo should be taken into account in all calculations; and

(c) When the vessel heels or trims, the dredged cargo may be assumed to spill out of the hoppers at the appropriate angles.

(d) Reduced freeboards (B-60, B-100) for barges with load lines may be issued subject to the provisions of 46 CFR 42.20. The calculations are checked by the load line assigning authority, who notifies the Coast Guard of their conclusions prior to assigning a load line. When hatch covers are not used, the barge requires a load line exemption certificate authorized by Commandant (G-KtH), regardless of the assigned freeboard. To obtain this certificate, the vessel must meet the intact criteria with the hopper full of seawater. A "working freeboard" is assigned only to self-propelled hopper dredges and additionally requires damage stability approval.

(7) Derrick Barges (46 CFR 173. Subpart B).

(a) The stability requirements for barges that lift age in 46 CFR 173, Subpart B. Included are requirements for barges both with and without counterballast. There are barges, however, that have no counterballast but rather a permanent counterweight. The stability information provided for the operator consists of a table of draft versus maximum vertical moment of deck cargo and hook load combined. This table is obtained by drawing righting arm curves for various

6.E.5.b.(7) (a) (cont'd) KG's until the maximum KG that satisfies the criteria is obtained. This KG is converted into maximum vertical moment by subtracting out the light barge.

(b) With a permanent counterweight, the counterheeling arm is defined at each displacement. The heeling arm is a variable depending on maximum hook load capacity at each boom radius. At the owner's option, the table can be made up at only the maximum heeling moment, or can be subdivided to include several moments; three radii should provide the necessary flexibility.

(c) The righting arm analysis needs to be performed at only three displacements: one at the load line, one at some displacement that will yield allowable vertical moments greater than ever expected to be necessary, and one at an intermediate displacement. The curve of allowable KG's against displacement will be almost linear.

(d) Where counterballasting arrangements are installed, the problem becomes four-dimensional; that is, draft, maximum vertical moment, boom radius, and counterballast configuration. With three boom radii considered, the number of tables would be increased to three times the number of counterballasting arrangements.

c. Collision Bulkheads On Barges. The requirements of SOLAS do not apply to barges that are not self-propelled and the Coast Guard regulations do not generally require or specify the location of a collision bulkhead. Further, regulatory reference to meeting ABS rules is for scantling requirements only and does not include subdivision or general arrangement requirements. Unless specifically addressed in Coast Guard regulations, the collision (first) bulkhead can be located in any longitudinal location, such that the applicable damage stability requirements are met.

6. Bulk Cargo Vessels.

a. Carriage Of Cement In Bulk. Bulk cement may be considered a nonshifting Cargo when considering the stability requirements for vessels carry ing bulk cement on the Great Lakes, coastwise, or ocean routes. Bulk cement is very cohesive, and a thin crust usually forms on its surface; both of these factors impede shifting. However, it is recommended that bulk cement be leveled off in holds during loading and allowed to settle prior to commencing an ocean voyage.

b. Carriage Of Sugar In Bulk. Raw sugar compacts and partially solidifies to the point where the angle of repose can exceed 90 degrees. Therefore, no special stability investigation is needed for vessels carry ing bulk sugar.

6.E.6. c. Carriage Of Grain In Bulk.

(1) Federal regulations for the carriage of bulk grain cargoes are contained in 46 CFR 31.10-33 (tank Vessels), 74.10-12 (Passenger Vessels), and 93.20 (Cargo and Miscellaneous Vessels). Except as provided in 46 CFR 31.10-33(a), all vessels which carry grain are required either to have a Document of Authorization to show compliance with the regulations (as appropriate) or to submit calculations which show the vessel complies with IMO Resolution A.264, Part B, Section V (C). Approval of this information must be recorded in the vessel's stability letter.

(2) Before it can sail on a bulk grain voyage, each vessel which carries grain must have a Certificate of Loading. This certificate shows the vessel was loaded in compliance with the approved stability information referred to in the Document of Authorization and that the grain was secured in accordance with IMO Resolution A.264 and the recommendations of the National Cargo Bureau (NCB). The certificate, issued by the NCB, is recognized by the Coast Guard as prima facie evidence of compliance with 46 CFR 93.20-15. [NOtE: A new certificate is required for each grain voyage.]

(3) Enclosure (1) to NVIC 3-75, "Bulk Grain Cargoes," contains a reprint of the International Maritime Consultative Organization's Resolution A.264 (VIII), "Amendment to Chapter VI of SOLAS (International Convention for SAFETY of Life at Sea) 60," which was adopted on 20 November 1973. This resolution was published by the Commandant for the information of naval architects, ship operators, marine surveyors, and others involved in the design or operation of vessels carry ing Bulk grain cargoes. Resolution A.264 (VIII) is now reflected in Chapter VI of SOLAS '74. [NOTE: In May 1982, the organization changed its name to the International Maritime Organization IMO).]

(4) NVIC 2-78, "Bulk Grain Cargo Regulations," contains the procedures for the submission and approval of calculations and for the issuance of Certificates of Loading in accordance with the regulations. It contains complete information on the submittal and approval of documents for tank vessels, unmanned Barges, single voyages, etc., and describes the relationship between the Coast Guard and the NCB.

d. Damage Stability Criteria.

(1) Equivalents: The damage stability criteria in the regulations for bulk carriers were in place prior to the development of international standards. The U.S. helped develop those international standards and in general they may be subtituted in their entirety for the corresponding requirements in Subchapter

6.E.6.(d) (1) (cont'd) S. They include the IBC and IGC Codes and they ensure an equivalent level of SAFETY to the regulations. Care must be taken to ensure that the parts of any criteria are not substituted for the parts of another.

(2) Multiple criteria: Some vessels have numerous applicable damage stability criteria due to a combination of services. In those cases, all of the applicable criteria must be met unless substitution on the basis of an equivalent level of SAFETY has been set forth, as in substituting other damage stability criteria for that found in 46 CFR Part 42 (type A reduced freeboards).

7. Great Lakes Bulk Carriers.

a. Introduction. Due to the unique design of Great Lakes bulk carriers, a stability check by the weather criterion in 46 CFR 170.170 is not considered sufficient. In lieu of the weather criterion, an equivalent criterion was developed to account for potential cargo shift moment, wind heel moment, and bilge heel moment of ballast tanks with residual water below the suctions. It has since been called the Magee criterion and is given in subparagraph 6.E.7.b below. It should be used to check the stability of each Great Lakes bulk carrier carry ing cargoes other than grain.

b. The Magee Criterion. In each allowable condition of loading, and after correction for free surface of all tanks except unused ballast tanks, which are covered by Mb, the vessel's metacentric height (GM) must be equal to or greater than that given by the following formula:

$$GM = \frac{Mw + Mc + Mb - Mf}{\Delta \times 1/2 \times \sin \theta_o}$$

Where Mw = mean wind heeling moment

Mc = mean cargo heeling moment

Mb = mean bilge water heeling moment of unused ballast tanks

Mf = mean form gain moment (maximum allowed is equal to lesser of Mb or Mc)

θ_o = angle of heel to deck edge (20 degrees maximum but not beyond deck edge)

Δ = displacement

c. Use Of Magee Criterion. The following notes are furnished to explain the use of the method and its derivation:

6.E.7.c. (1) Mw is the mean wind heeling moment (see Figure 6-7). The ordinates of the wind moment curve are taken as the product of the upright wind moment and the cosine of the angle of heel.

(2) Mc is the mean cargo heeling moment (see Figure 6-8). The ordinates of the cargo heeling moment at any point may be represented by:

$$M = \frac{k \times l \times b^3}{\sigma}$$

Where l = length of cargo hold

b = breadth of cargo hold

σ = density of cargo (i.e., ft^3/ton)

and k is a factor based on the pile geometry and the cargo angle of repose. It is obtained from curves such as Figure 6-13 or, where pile shapes different from those assumed in Figure 6-13 are used, bulk shift moments may be independently derived for that specific geometry. To simplify calculations if the data of Figure 6-13 applies, that data has been operated on to give mean K values in Figure 6-14. To obtain the mean K, which may be used directly in the formula below, enter Figure 6-14 with θ_o.

$$Mc = \frac{k \times l \times b^3}{\sigma}$$

Where k = mean cargo shift moment factor at the maximum angle permitted for θ_o.

Where bulk shift moments are independently derived, each static Cargo shift moment for a specific heel angle is the product of the shift lever (taken parallel to the heeled waterline) and the weight of the volume shifted. During the simulated shift, it is assumed that the slope of repose of the bulk is continually re-established with respect to the heeled waterplane.

Where a cargo has been trimmed to an angle other than its natural angle of repose, the procedure in the examples with Figures 6-17 and 6-18 should be used to derive the mean Cargo moment. This procedure is commonly used for coal.

(3) Mb is the mean bilge heeling moment (see Figure 6-9). Bilge water heeling moment is included in the calculations to account for the residual water below the tank suctions in the ballast tanks. The procedure in the example with Figure 6-19 may be used.

6.E.7.c. (4) Mf is the mean "form gain" righting moment from 0 degrees to 0_D and may be treated as a negative heeling moment. It is permitted up to the value of Mb or Mc whichever is less. The Niedermair method for "form gain" (Stability of Ships After Damage, by J. C. Niedermair, Society of Naval Architects and Marine Engineers (SNAME) Transactions 1932) has been used where the form gain factor is represented by:

$$k = 100\ (0.5 - \frac{.222}{1000}\ \theta^2)\ \tan^2\theta\ \sin\theta$$

Where θ = angle of heel, in degrees, within deck range

Figure 6-16 was obtained by integration of the area under the form gain coefficient (k) curve and dividing by 0 to get a mean K for computation of:

$$Mf = K \times \frac{BM}{100} \times \Delta$$

Where BM = the metacentric radius

Δ = displacement

[NOTE: Do not confuse these k factors with those in the section on cargo heeling moment.]

(5) Mt is the total heeling moment and is equal to:

$$Mt = Mw + Mc + Mb - Mf$$

[NOTE: For simplicity Mf has not been included in Figures 6-7 through 6-12.]

(6) Mr is the mean righting moment (see Figure 6-11). When Figures 6-10 and 6-11 are combined as shown in Figure 6-12, and Mt is taken equal to Mr, then the areas under the two curves are equal, i.e., $Mt \times \theta_D = Mr \times \theta_D$. This fulfills the dynamic stability requirement. Referring to Figure 6-12, y_2 is always greater than y_1, when the areas under the curves are equal. This fulfills the requirements for availability of righting moment at the maximum angle of dynamic heel. By substitution, when Mr = Mt, the equation in subparagraph 6.E.7.b above is obtained when a negative Mf is added to include a term for "form gain."

FIGURES 6-7 THROUGH 6-12

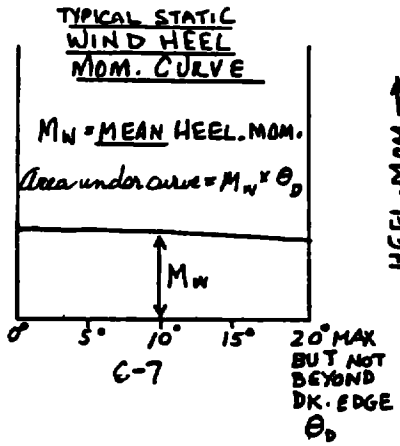

6-7

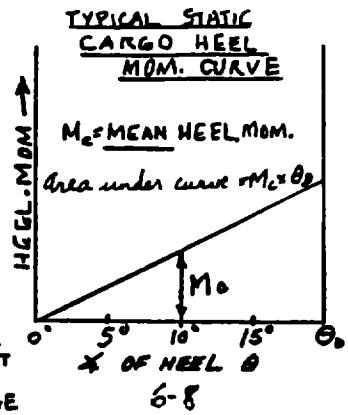

6-8

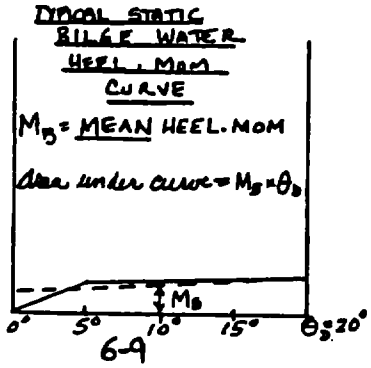

6-9

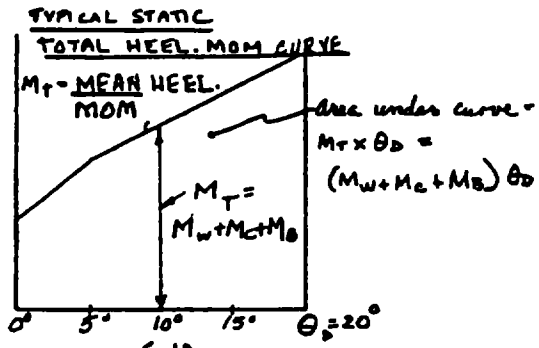

6-10

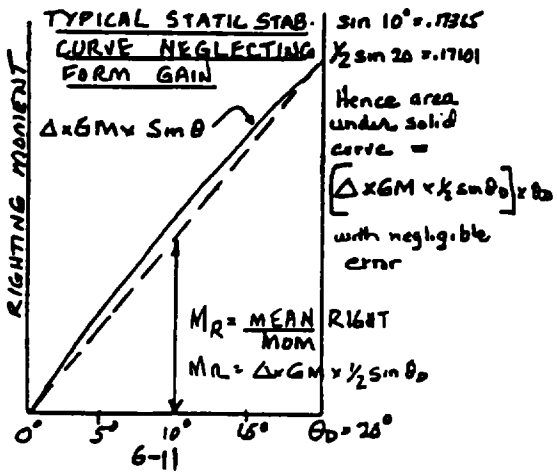

sin 10° = .17365
½ sin 20 = .17101
Hence area under solid curve = $\left[\Delta \times GM \times \frac{1}{2}\sin\theta_D\right] \times \theta_D$ with negligible error

6-11

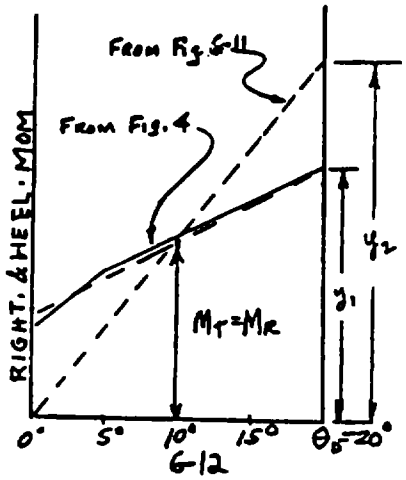

6-12

FIGURE 6-13

HEELING MOMENT COEFFICIENTS FOR POSSIBLE CARGO SHIFT

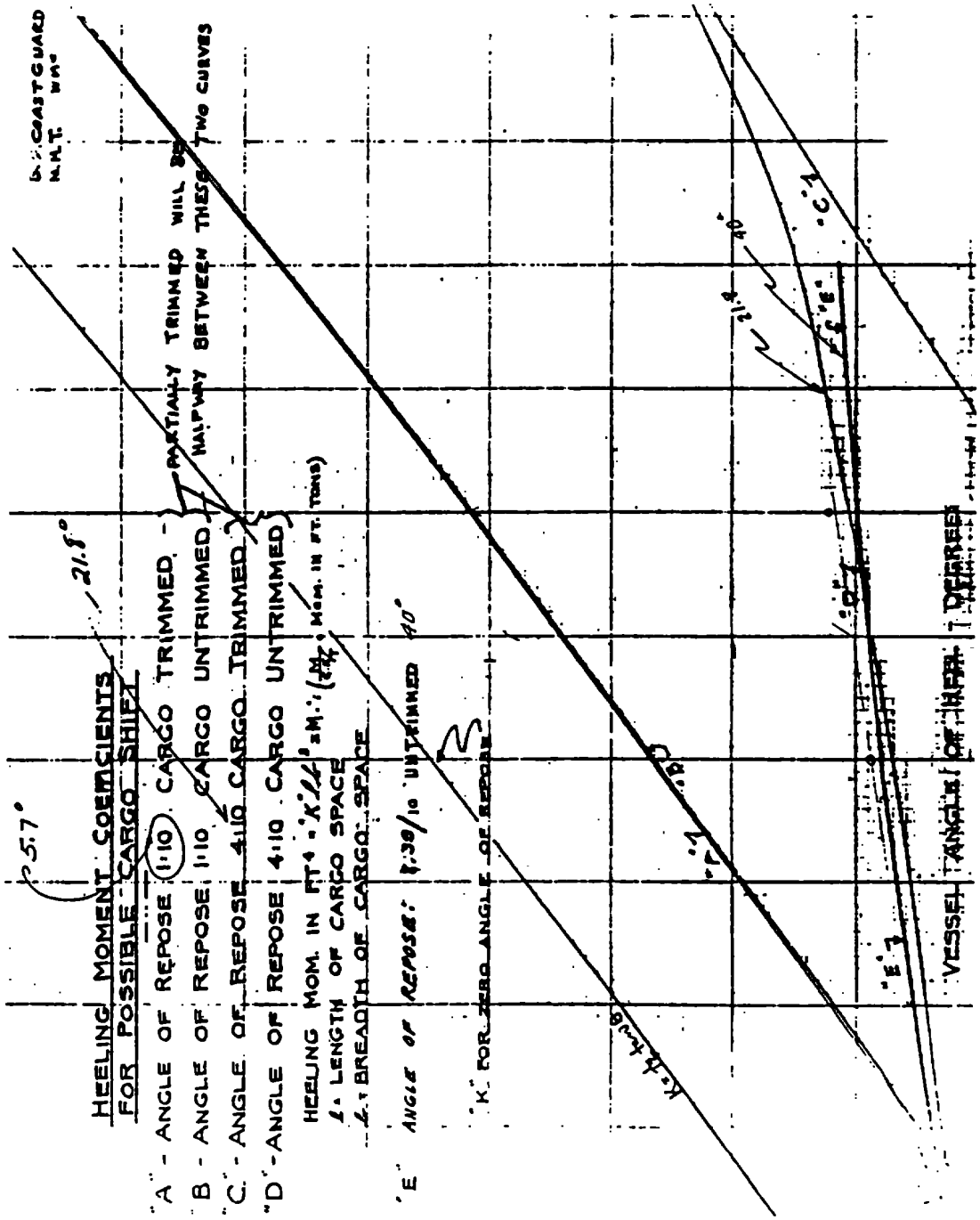

FIGURE 6-14

MEAN HEELING MOMENT COEFFICIENTS FOR POSSIBLE CARGO SHIFT

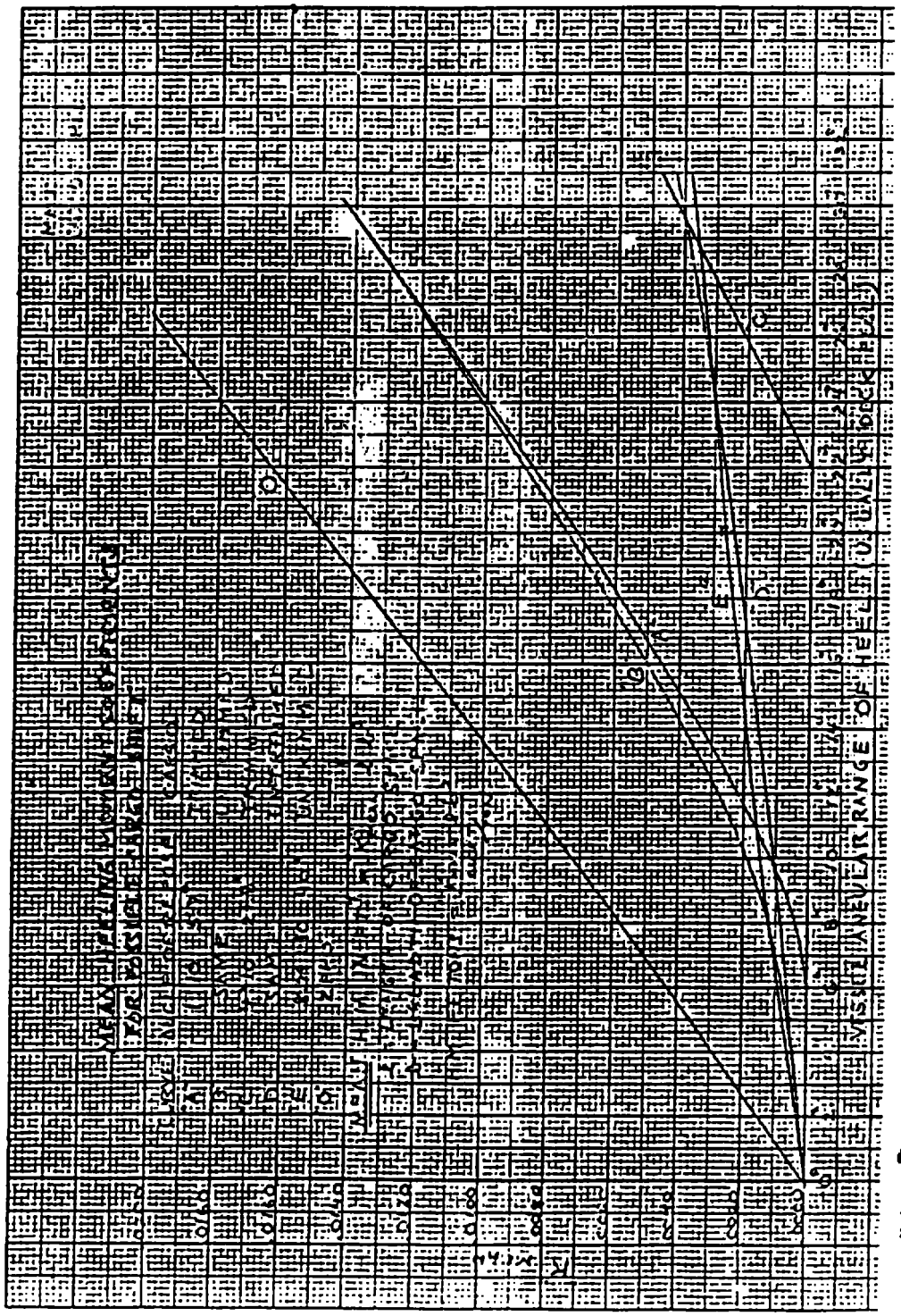

Note: These curves obtained by integration of static heeling mom. coeffs. to angles of heel ϕ by angles of heel. Static heeling mom. curves and integrations verified Oct. 1965. Heeling moment arms taken parallel to heeled waterlines.

FIGURE 6-15

CURVES FOR FREE SURFACE CORRECTION IN TANKS NEARLY FULL OR NEARLY EMPTY

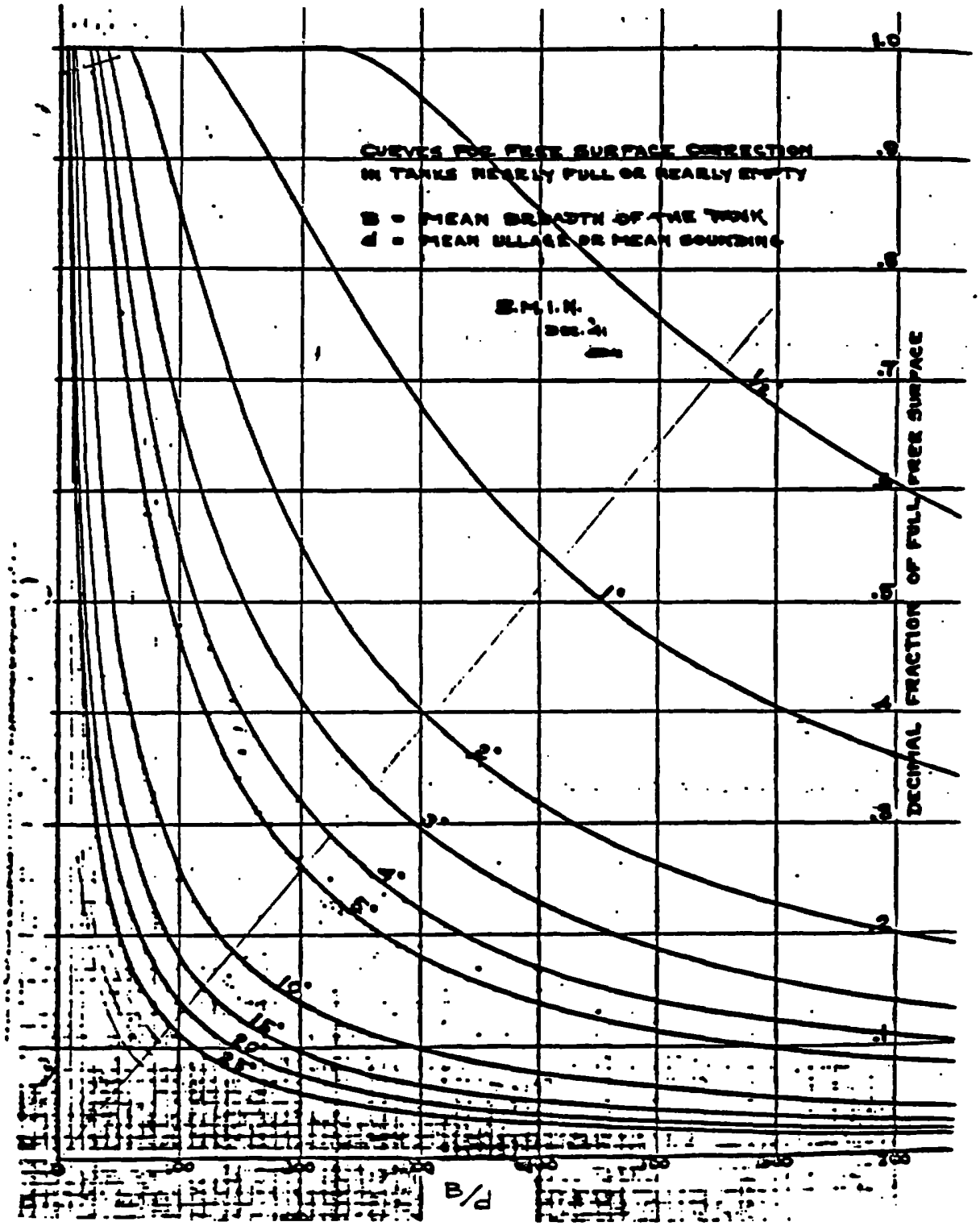

FIGURE 6-16

MEAN FORM RIGHTING MOMENT FACTOR

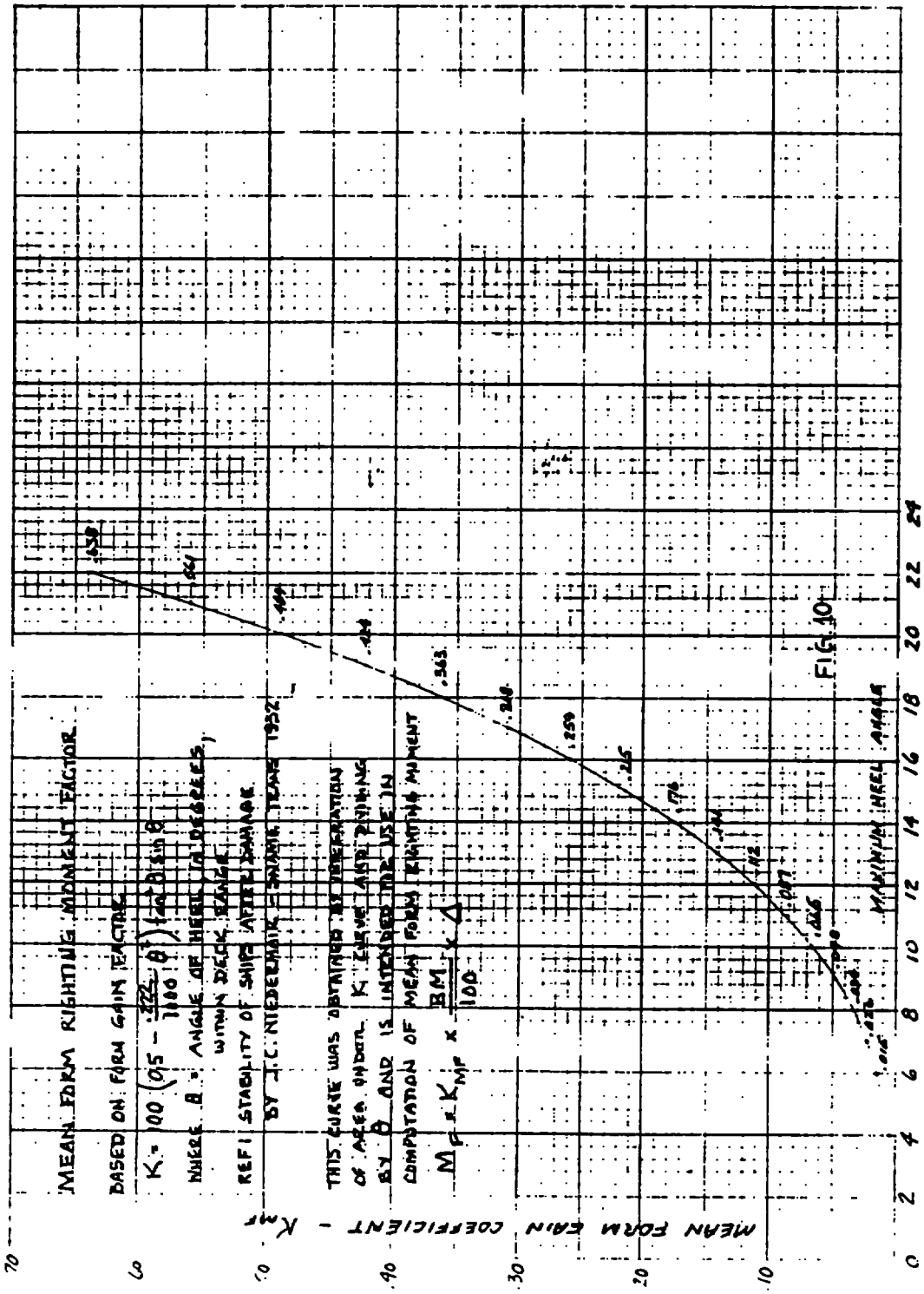

FIGURES 6-17 AND 6-18

MEAN CARGO MOMENT

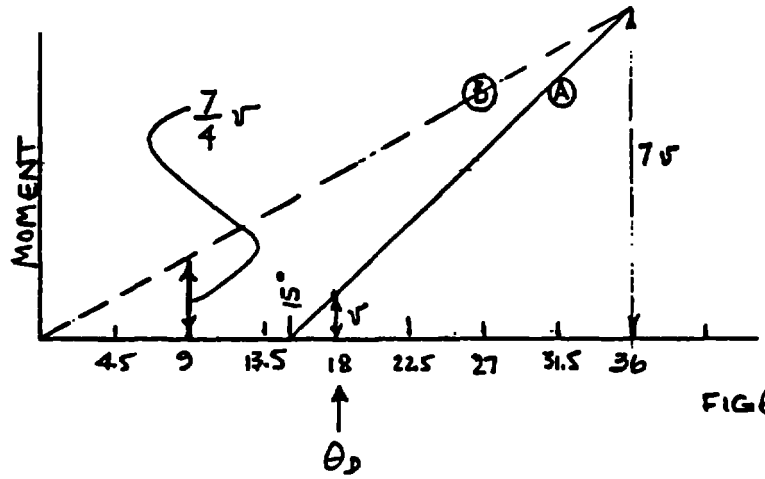

FIG 6-17

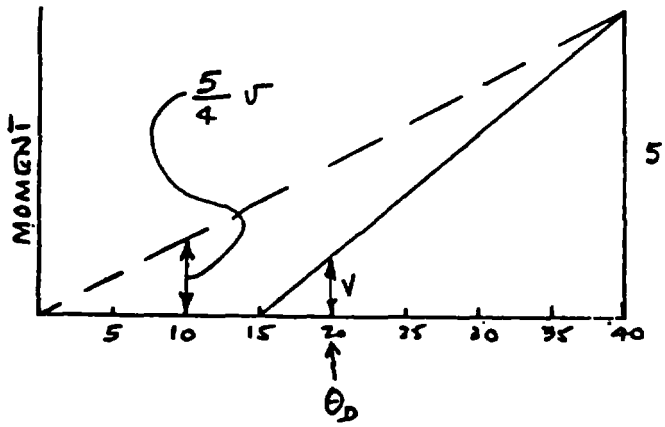

FIG 6-18

FIGURE 6-19

EXAMPLE OF CALCULATION OF Mb

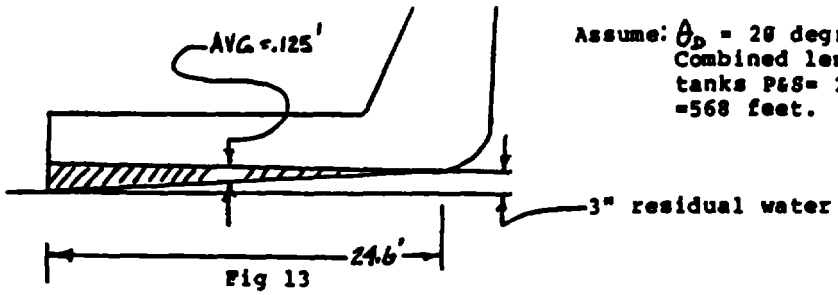

Fig 13

Assume: θ_D = 20 degrees
Combined length of tanks P&S= 284 x 2 =568 feet.

$$\frac{B}{d} = \frac{24.6}{.125} = 197$$

$$I_t = \frac{568\ (24.6)^3}{12} = 704648 \text{ Ft}$$

$$\frac{I_t}{\delta} = \frac{704648}{35.9} = 19628 \text{ Ft. Tons.}$$

STEP 1

Angle	0	5	10	15	20
Sin	0	.087	.174	.259	.342
K	1	.265	.143	.098	.077
$I/\delta \sin\theta$	0	1711	3408	5080	6713
M	0	453	487	498	517

$$\text{Where } M = \frac{I \times \sin\theta \times k}{\delta}$$

STEP 2

Angle	M	1/2 SM	fM
0	0	.5	0
5	453	2	906
10	487	1	487
15	498	2	996
20	517	.5	258
		sum	2647

Mb=2647/6 = 442 Ft. Tons

Where double bottom arrangement is other than this simple example the problem is solved similarly by parts using appropriate B/d and I/δ for all parts to get M's for each part at each angle,which are then run thru step 2 for the whole.

6.E.7.c. (6) (cont'd)

EXAMPLES OF COMPUTATION OF Mc FOR TRIMMED CARGO:

Example 1:

Assume: Angle of heel to deck edge = 18 degrees
Natural angle of repose of cargo = 35 degrees
Cargo trimmed to 20 degrees

As the vessel heels, the cargo will theoretically not start to shift until the vessel heels to 15 degrees (i.e., 35-20). A typical cargo shift moment curve from 15 degrees to 18 degrees might be represented by the initial portion of curve A in Figure 6-17. This is significantly different from that assumed in the derivation of the required BM formula which assumed a straight line or at least a decreasing slope with increasing heel angle from zero. To obtain a reasonable Mc, extend curve A linearly or in a manner appropriate to that which would result from the pile geometry if it were shifted to twice the angle to deck edge. Then construct a pseudo-cargo shift moment curve B from zero degrees as shown in Figure 6-17. Since the interval from 15 to 36 is 7 times the interval from 15 to 18, by similar triangles the mean Mc at 9 degrees is 7/4 times the moment at 18 degrees.

Example 2:

Assume: Angle of heel to deck edge = 20 degrees
All other conditions as per example 1 above

In a manner similar to example 1, the moment curve from 15 to 20 degrees is determined; then the mean Mc at 10 degrees is determined as in Figure 6-18 by similar triangles to be 5/4 times the moment at 20 degrees.

[NOtE: The angle where the curve A and B meet in Figures 6-17 and 6-18 should be selected to be twice the angle to the deck edge.]

See Figure 6-20 for an example of the computations for a typical vessel.

FIGURE 6-20

TYPICAL COMPUTATIONS FOR A 750' X 70' X 36' BULK CARRIER

MEAN KEEL DRAFT = 26.98 (M/V TACOMITE - CHUTES) MEAN MOLDED DRAFT = _____

TOTAL DISPLACEMENT (LT) = 34,958

DECK EDGE ANGLE = $\tan^{-1}\left\{(\text{DEPTH-MEAN KEEL DRAFT}) \div \frac{\text{BEAM}}{2}\right\}$ = $\tan^{-1}\left\{(36 - 26.98) \div 25\right\}$ = 14.45

(IF GREATER THAN 20°, USE θ MAX = 20°)

Δ(LT) x 1/2 SIN 14.45° = 34958 x .1248 = 4363

WIND HEEL MOMENT

ANGLE	0°	3.61°	7.22°	10.84°	14.45
COS θ	1	.998	.992	.982	.968
S.M.	1	4	2	4	1
f(COS θ)	1	3.992	1.984	3.929	.968

MEAN M_W = M_W @ 0° $\frac{\sum f(\cos\theta)}{12}$ = 3910 x $\frac{11.873}{12}$ = 3869

CARGO HEEL MOMENT

ANGLE	0°	3.61	7.22°	10.84°	14.45
HOLD 1, HOLD 2, HOLD 3, HOLD 4, HOLD 5	0	3980	8500	13690	19320
TOTAL	0	3980	8500	13690	19320
SM	1	4	2	4	1
f(M_C)	0	15920	17000	54760	19320

MEAN M_C = $\frac{\sum f(M_C)}{12}$ = $\frac{107000}{12}$ = 8917

BILGE HEEL MOMENT

ANGLE	0°	3.61°	7.22°	10.84°	14.45°
MOMENT	0	3480	3865	4040	4170
SM	1	4	2	4	1
f(M_B)	0	13920	7730	16160	4170

MEAN M_B = $\frac{\sum f(M_B)}{12}$ = $\frac{41980}{12}$ = 3498

FORM RIGHTING MOMENT (M_F ALLOWED UP TO LESSER OF M_C OR M_B)

BM = KM - KB = 28.70 - 13.78 = 14.92

MF = $\frac{K \times BM \times \Delta LT}{100}$ = $\frac{.193 \times 14.92 \times 34958}{100}$ = 1007

REQ'D GM

G.M. = $\frac{M_W + (M_C + M_B - M_F)}{\Delta LT \times 1/2 \text{ SIN } 14.45°}$ = $\frac{3869 + (8917 + 3498 - 1007)}{4363}$ = 3.50'

FIGURE 6-20 (cont'd)

TYPICAL COMPUTATIONS FOR A 750' X 70' X 36' BULK CARRIER (cont'd)

MS STONE

MEAN KEEL DRAFT = 26.98 MEAN MOLDED DRAFT = _____

TOTAL DISPLACEMENT (LT) = 24923

DECK EDGE ANGLE = $\tan^{-1}\left\{(\text{DEPTH-MEAN KEEL DRAFT}) \div \frac{\text{BEAM}}{2}\right\}$ = $\tan^{-1}\left\{(36.0 - 26.98) \div 35\right\}$ = 14.45°

(IF GREATER THAN 20°, USE θ MAX = 20°)

Δ(LT) x 1/2 SIN 14.45° = 24923 x .1248 = 4358

WIND HEEL MOMENT

See MS TACONITE CHUTES EXAMPLE

ANGLE					
COS θ					
S.M.	1	4	2	4	1
f(COS θ)					

MEAN M_W = M_W @ 0° $\frac{\sum f(\cos\theta)}{12}$ = 3910 x $\frac{11.873}{12}$ = 3869

CARGO HEEL MOMENT

ANGLE	0°	3.61°	7.22°	10.84°	14.45
HOLD 1, HOLD 2, HOLD 3, HOLD 4, HOLD 5	0	100	250	380	520
TOTAL	0	100	250	380	520
SM	1	4	2	4	1
f(M_C)	0	400	500	1520	520

MEAN M_C = $\frac{\sum f(M_C)}{12}$ = $\frac{2940}{12}$ = 245

BILGE HEEL MOMENT

SEE MS TACONITE CHUTES EXAMPLE

ANGLE					
MOMENT					
SM	1	4	2	4	1
f(M_B)					

MEAN M_B = $\frac{\sum f(M_B)}{12}$ = $\frac{41980}{12}$ = 3498

FORM RIGHTING MOMENT (M_F ALLOWED UP TO LESSER OF M_C OR M_B)

BM = KM - KB = 28.70 - 13.78 = 14.92

M_F = $\frac{K \times BM \times \Delta LT}{100}$ = $\frac{.193 \times 14.92 \times 24923}{100}$ = 1006 > 245 (Mc) USE 245

REQ'D GM

G.M. = $\frac{M_W + (M_C + M_B - M_F)}{\Delta LT \times 1/2 \text{ SIN } 14.45°}$ = $\frac{3869 + (245 + 3498 - 245)}{4358}$ = 1.69'

6.E.8. Liquefied Natural Gas (LNG) Carrier Requirements.

a. Damage Stability Requirements While Loading And Discharging Cargo. The damage stability requirements of 46 CFR 172, Subpart D and 46 CFR 172, Subpart G will not be applied to transient conditions occurring during loading or unloading operations at the pier.

b. Pollution Prevention Standards.

(1) Pressure vacuum (P/V) valves are considered points of downflooding up to the angle of equilibrium, but need not be considered as points of downflooding within the required range of residual stability after damage.

(2) A vessel should satisfy the damage stability requirements at all allowable drafts and trims.

9. Small Passenger Vessels.

a. General. The following vessels are permitted by 46 CFR 171.030 and 171.043 to determine compliance with subdivision and stability by simplified methods, without the need for furnishing related plans or calculations:

(1) "S" vessels carry ing 150 passengers or less on domestic voyages; or

(2) "S" vessels carry ing 12 passengers or less on international voyages.

b. Simplified Stability Test. When a simplified stability test is required by 171.030, it is the owner's or builder's responsibility to conduct the test in the presence of a Coast Guard marine inspector. Form CG-4006 is used by the inspector to determine whether the vessel successfully passes the test.

c. Simplified Subdivision Calculation. The regulations in 46 CFR 171.043 consist of an empirical relationship that was derived to ensure compliance with a one-compartment standard of subdivision, through a simplified calculation. The results of this regulation are quite conservative. A generous factor of SAFETY was intentionally placed on the Floodable Length Factors to help ensure that the maximum allowable compartment length would be less than the corresponding floodable length at that location (for a permeability of 0.95), for a large variety of hull forms and different hull proportions. Form CG-4005, Small Passenger Vessel Simplified Subdivision Calculation, provides instructions and calculation sheets for this purpose and shall be completed by the marine inspector.

6.E.9. d. Assumptions For Calculations/Tests. All passengers must be assumed to be standing in order to check the worst VCG condition. Their VCG must be at least 3.0 feet above the highest deck to which they are allowed access. The average weight of a passenger is assumed to be 160 pounds at all times. However, when the vessel is operating on protected waters and the passengers consist of adults and children, 140 pounds can be used as the assumed weight per passenger (see 46 CFR 171.030). When passengers are assumed to have an average weight of 140 pounds the stability letter should also indicate the maximum number of passengers allowed when children are not carried and that number should be based on a minimum average weight of 160 pounds.

e. Subdivision Calculations. Subdivision Calculations must be made at the deepest draft at each perpendicular for the approved loading conditions. Trim is critical for subdivision.

f. Foam Flotation. Foam flotation should not in general be allowed when installed to comply with stability requirements since operators may not follow instructions to properly maintain it. The OCMI will determine when foam flotation may be used. Flotation foam is envisioned as being used only on vessels less than 65 feet in length where it is often difficult to space bulkheads for stability purposes yet retain utility of below deck spaces.

g. Collision Bulkheads. 46 CFR 171.085 specifies the extent and integrity of required collision bulkheads. The definition of "oceans" for Subchapter S in 46 CFR 170.050 includes most partially-protected and coastwise routes. Henceforth, the collision bulkhead must extend to the weatherdeck unless the route is not oceans as defined in Subchapter S. A more severe requirement than the requirement for large passenger vessels is not intended so the collision bulkhead need not extend above the bulkhead deck for other services. Also, the aftmost location of the collision bulkhead need be governed only by damage stability calculations, when they apply. A 15 percent of LBP limit on the aftmost location is an unnecessary requirement when damage stability is required.

h. Ballast. Ballast necessary to meet stability requirements should be fixed and described in the stability letter. Experience has shown that some operators change liquid ballast without considering compliance with stability guidance. One exception to the requirement for using only fixed ballast is the use of "active ballast" systems on unusual craft such as SWATH. In those cases, special consideration should be given to the qualification of operating personnel, such as that described in volume III of this manual, for dynamically supported craft operators. Optional ballast for trim may be permitted on any vessel provided stability is satisfactory, with and without ballast.

i. Watertight Doors In Watertight Bulkheads. Watertight doors should not be used in subdivision bulkheads which are subject to passenger access

6.E.9. i. (cont'd) or where crew might leave them open. As indicated elsewhere in this manual, watertight doors should generally be used only in crewboats. Doors must be specially considered during conversions of crewboats and normally removed. The regulatory requirements for remote indicators (alarms), signs, and quick-acting closure devices apply to all doors permitted in subdivision bulkheads and do not constitute any credit in determining if doors will be kept closed. Alarms have occasionally been disconnected or defeated and doors are occasionally left open to assist in under deck ventilation.

j. Simplified Tests As Equivalents to Calculations. Stability of T(L) vessels can often be evaluated with simplified methods on the basis of equivalency. Fig. 6-20.5 is a flow chart that synopsizes the logic for deciding what tests and calculations are appropriate. The simplified intact stability test ensures equivalence to wind and passenger criteria, but has no bearing on righting energy (at large angles of heel); and, therefore, is suitable on low profile vessels like yachts but not on high profile vessels like multi-deck sightseeing vessels. The simplified subdivision test ensures equivalence to subdivision calculations but has no bearing on damage stability (the ability to remain upright). A basic difficulty may exist in conducting the simplified intact stability test when the wind moment is larger than the passenger moment. Extra deadweight should not be added for the purpose of achieving the moment since some vessels are less safe in light conditions. The burden of conducting an inclining experiment can be avoided in some cases by assuming a safe (high) KG for lightship and using a deadweight survey to obtain displacement and LCG.

FIGURE 6-20.5

DETERMINING STABILITY: PROOF TESTS/INCLININGS/DEADWEIGHT SURVEYS

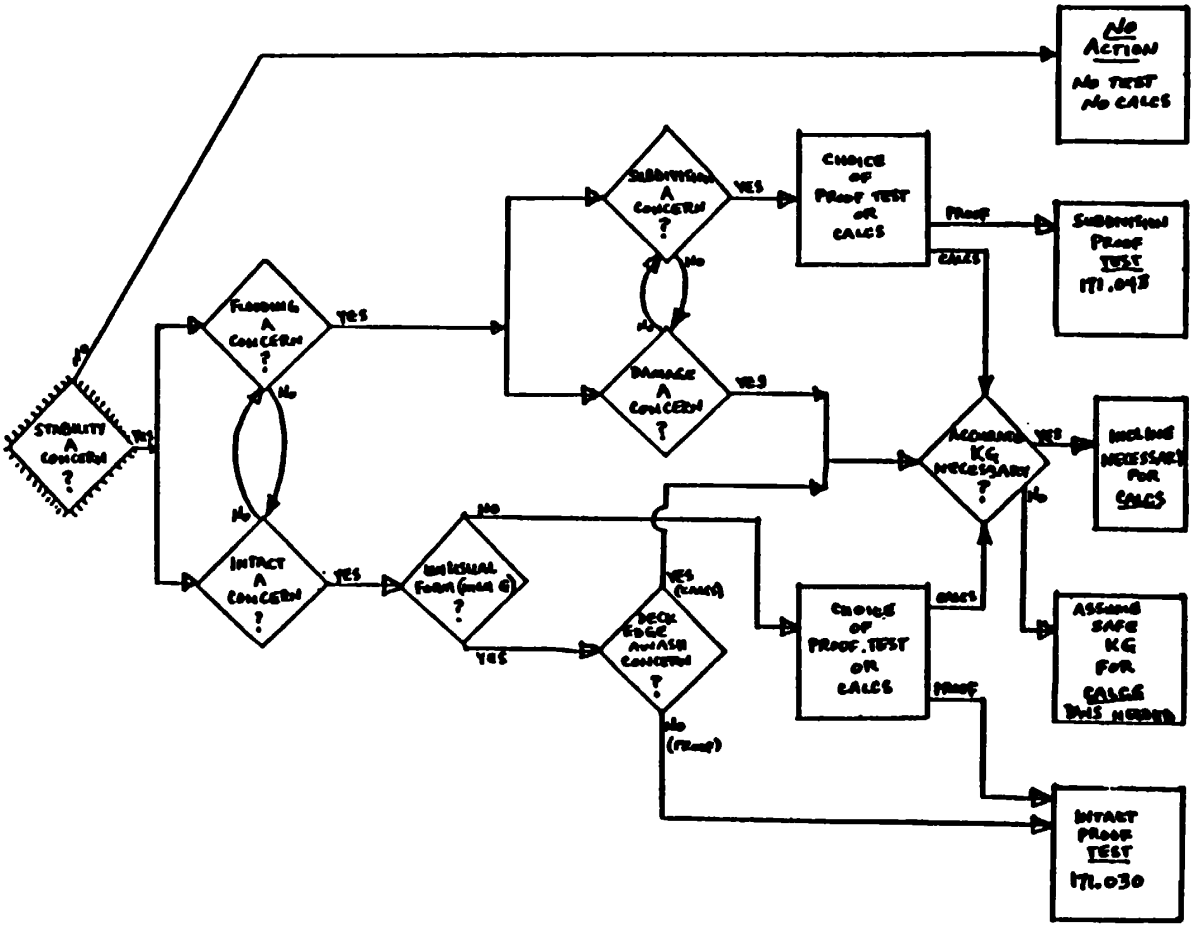

6.E.10. Uninspected Vessels. Stability is reviewed for some uninspected vessels. Those which receive load lines shall be subject to the same intact stability criteria as inspected vessels of the same type in the same service. Normally, these vessels are small research vessels, lifeboats, fish processing vessels, and towing vessels. The criteria for tugboats apply regardless of gross tonnage, provided the vessel is to have a load line.

11. Vessels Equipped To Lift. The regulations apply to all services and to all types and sizes of cranes. Small service cranes may not produce enough moment to necessitate special criteria calculations in 46 CFR Part 173, Subpart B. 46 CFR 173.005(b) should be used to determine if calculations are necessary.

a. Energy credited in the criteria is that remaining after correction for the heeling arm from lifting ("residual" energy).

b. The heeling moment must include the components from the hook load, the boom, the cab, and off center base (if it is not balanced by a fixed deadweight).

c. Fixed counterweights on a cab necessitate loss of hook load calculations, as does liquid counterballast.

d. Combinations of cranes must be evaluated to determine the need for calculations and operating restrictions. Dockside lifting is not normally a concern for stability but should be checked if capsizing would create a hazard to navigation or create a major oil spill.

e. A minimum freeboard need not be maintained during lifting provided the criteria are satisfied and the crane operator is not exposed to boarding seas. Generally, deck immersion is not a problem when righting energy criteria are satisfied and downflooding is considered.

f. The formula for determining the necessity to perform energy calculations is to be evaluated with the hook load at the tip of the boom. The coefficient in 46 CFR 173.005(b) is 0.67 in the metric and English versions.

g. The proof-test to avoid energy calculations shall be applied only when all three parameter ranges apply and consequently will normally be applicable only when transverse lifts are being considered.

h. Material failure of the crane will not normally be considered as justification for not complying with the regulations. Manufacturers specify strength as the least stress which could cause failure rather than a stress which will definitely cause failure on all units.

6.E.11. i. Stern lifts should be evaluated using the same criteria as transverse lifts except that longitudinal GH should be used in lieu of transverse GH, and L and B should replace each other.

j. Operating guidance concerning the use of cranes should cover all boom angles, or radii, in the vertical and horizontal (azimuth) planes. Load charts are recommended.

12. Multi-Hull Vessels.

a. For motored multi-hull vessels, such as SWATH and catamarans, the intact criterion for wind and roll in DDS-079-1-d(6) may be substituted for 46 CFR 170.170 and 170.173 under equivalency provisions. The wind speed shall be 60 knots for service on exposed and partially-protected waters and 40 knots for service on protected waters. The angle of roll from equilibrium into the wind shall be at least 15 degrees unless a different angle is shown appropriate. The criterion requires the energy between the righting arm and wind healing arm from equilibrium to the minimum angle of downflooding, 40 or the second intercept to be at least 1.4 times that from equilibrium to the specified windward limit. Also, the righting arm at equilibrium must not exceed 0.6 times the maximum righting arm and the angle of equilibrium must not exceed 15 degrees. The wind heeling arm is to be taken as 0.004 A h v^2/(2240 x DISP) x COS 0 and must account for wide flat cross structures if the area increases significantly with roll.

b. Sailing multi-hulls shall meet rules for sailing monohulls, or 46 CFR 171.057 if it is applicable. Longitudinal stability should be considered. Pitch-polling is possible with small outer hulls, especially those that become submerged as the vessel heels under sail.

c. For services with subdivision requirements, symmetric flooding is required at the forward end for one compartment. When multiple compartment subdivision is required at the bow, symmetric flooding is required to that standard. Likewise, ferries will normally require symmetric flooding at both ends. Otherwise, a B/3 transverse bottom damage is required, with penetration B/15, or 30 inches if more, up from the bottom. This provides an equivalency to subdivision regulations.

d. For damage stability, the transverse extent of damage need not exceed 1/5 of the maximum total buoyant beam at or below the deepest waterline. This provides an equivalency to the regulations. The total buoyant beam is the sum of the widths of buoyant components (hulls) at any given longitudinal position.

13. Vessels With Watertight Doors In Non-Subdivision Bulkheads. (46 CFR 170, Subpart F) - The requirements for watertight doors below the bulkhead deck apply only to those doors in bulkheads considered watertight in stability

6.E.13. (cont'd) calculations (subdivision bulkheads and any others used in damage stability calculations). Doors in other bulkheads do not require alarms, signs or quick-acting devices, and need not be of the sliding type. Sliding watertight doors in bulkheads that are not required to be watertight for stability purposes do not have to be approved under Subchapter Q.

14. Vessels With Intentional, Progressive, Or Controlled Downflooding. Occasionally the damage stability criteria can be met after progressive flooding or with spaces intentionally left open. In the calculations these flooded spaces must be considered as if flooded at all angles of heel. The operating guidance must cover these situations. A prime example of this consideration occurs on MODU chain lockers.

15. Vessels Subject to 46 CFR 171.080 Or 171.070.

a. 46 CFR 171.080(d)(1) provides for the MSC determining righting requirements after damage. Normally, the range of stability after damage shall be at least 12 degrees, the maximum positive righting arm within the 15 degree range shall be at least 0.1 meters (3.3 inches), and the positive area under the curve within the 15 degree range must be at least 0.015 m.rad (2.8 ft-deg). Downflooding may not occur within the 15 degree range of positive stability.

b. SOLAS amendments with an effective date of 29 April 1990 include provisions for evaluating overturning forces in the damaged condition. These provisions are required for vessels specified in the regulations and may be used as a reference in cases where the OCMI questions the stability of a vessel in the damaged condition.

c. 46 CFR 171.070 specifies subdivision in each condition of loading and operation. This means zero trim calculations suffice only when the intact draft, at both perpendiculars of each approved loading condition, does not exceed the draft of subdivision calculations. Although floodable length does not account for KG, it may be used to prove subdivision since damage stability will account for KG for realistic cases of flooding. Floodable length calculations can be done with initial trim.

d. Vessels under 143 feet in length, which do not carry more than 12 passengers on an international voyage, may use a minimum bulkhead spacing of 10 percent of LBP since SOLAS does not apply.

e. Subdivision bulkheads may be stepped with a vertical section serving as another main transverse bulkhead provided the horizontal section of the stepped bulkhead is considered damaged and each vertical segment of stepped bulkheads is separated by the minimum spacing if those segments are not subject to damage.

f. The margin line may be submerged in isolated cases where Commandant determines that an equivalent level of SAFETY to the level required by

6.E.15. f. (cont'd) the regulations exists. One major factor is the amount of righting energy after damage.

16. Vessels Subject to 33 CFR 157.

a. 46 CFR 172.065 provides for not damaging an aft machinery space. Such a space must fit the definition in 46 CFR 30.10-42, vice 46 CFR 171. The intent is to reflect the use of the space in this instance, rather than realistic permeability.

b. As part of NVIC 10-82, CH-1 (contrary to Section III, J, enclosure 1), ABS checks compliance with 33 CFR 157.19 (tank outflow) and 157.10 (protectively located ballast calculations).

c. Segregated and clean ballast requirements of 33 CFR 157 provide for reduced amounts of that ballast capacity when the normally required amounts would cause more than 110 percent of propeller immersion or draft standards. The lesser amounts of required ballast must result in at least 80 percent of the propeller immersion and draft standards. The combination of tanks to qualify for the 80 percent provision may not be arbitrary. Proposals for a specific qualifying arrangement should demonstrate why other arrangements are not acceptable. Clean ballast tank installations must use wing tanks in lieu of center tanks unless specifically approved by Commandant. Segregated or clean ballast arrangements, using only wing tanks for the 80 percent standard, are acceptable even if a combination of wing and center tanks meets the full draft and immersion standards. This is because the preferred segregated ballast might cause a greater loss of deadweight, due to the inclusion of center tanks (see NVIC 1-81, CH-1).

d. So that 46 CFR 172.065 confirms compliance with MARPOL requirements, the longitudinal extent of damage in the regulations for the aft 0.7L of the vessel shall be $0.495L^{2/3}$ ($1/3L^{2/3}$m), vice L/10.

PARAGRAPH d.

17. Vessels With Underwater Volume Beyond the Perpendiculars. Damage stability criteria define a longitudinal extent of damage based on the length of the waterline. The intent is to damage a certain portion of the buoyant volume. Typical projections such as bulbous bows do not contribute much buoyancy. However, large projections should be included as a part of L to properly reflect total buoyancy. Reference may be made to SOLAS for measuring L. Collision bulkheads may be located using the provisions of SOLAS or ABS Rules for Classing Steel Vessels (large vessels) since the regulations do not specifically address bulbous bows.

18. Lifeboats are self-propelled units with legs which operate like Jack-up MODU's. They are not drilling units. Lifeboats are typically uninspected but receive load lines if over 79 feet in length. The stability criterion for MODU's shall be applied for unrestricted service. For restricted service, use a storm wind speed of 70 knots, an

6.E.18. (cont'd) operating condition wind speed of 60 knots, and the route must be limited to allow jacking-up within 12 hours to withstand storms (see NVIC 8-81, CH-1).

19. Fishing And Fish Processing Vessels.

a. Fishing Vessels. Fishing vessels are specifically exempted from inspection and load line requirements. Due to a large number of serious casualties, voluntary standards were published in NVIC 5-86. Many of these voluntary standards will be made mandatory for fishing vessels by the new regulations being developed under Public Law 100-424.

b. Fish Processing Vessels. Fish processing vessels are subject to load line requirements and must comply with the same stability criteria as inspected vessels which have the same proportions and service. To verify the adequacy of processor's stability, either of the following sets of stability criteria may be applied:

Alternative 1:

46 CFR 170.173 - Criterion for Vessels of Unusual Proportion and Form,
46 CFR 170.170 - Weather Criterion,
46 CFR 173, Subpart B - Lifting (if applicable), and
46 CFR 173, Subpart E - towing (if applicable).

Alternative 2:

Torremolinos Convention Criteria (NVIC 5-86), IMO Severe Wind and Rolling Criteria (NVIC 5-86), Lifting Criteria (NVIC 5-86) (if applicable), and 46 CFR 173, Subpart E - towing (if applicable). Damage stability shall not be required.

[Note: NVIC 5-86 contains a recommendation that the torremolinos Convention Criteria be supplemented with a minimum range of stability of 60 degrees. This recommendation was intended for fishing vessels with hatches that are normally kept open at sea during fishing operations. The fishing/fish processing vessel need not meet the minimum 60 degree range criterion if either:

(1) Hatches in the watertight/weathertight envelope are normally kept closed at sea (e.g., the live tank hatch is only opened intermittently, under controlled conditions); or

(2) Unintentional flooding through these hatches does not result in progressive flooding to other spaces.]

In all cases, the intact stability analysis must consider that spaces accessed by such hatches are flooded full or flooded to the level

6.E.19. b. (cont'd) having the most detrimental effect on stability when free surface effects are considered, whichever is the worst case.

c. Ballast. Required ballast must be either fixed (preferable) or seawater. Seawater ballast must be handled in stability calculations as with inspected vessels. Catch (cargo) may not be used as ballast when ballast is required.

d. Stability Information. Stability information to the master must clearly indicate the conditions under which the stability has been found satisfactory. It must be as simple and straightforward as possible. Further guidance may be found in NVIC 3-89, Guidelines for the Presentation of Stability Information for Operating Personnel.

20. Vessels Subject to 46 CFR 170.173 (Unusual Provortion And Form).

a. Starting With the Weather Criterion. In the early 1940's the Coast Guard developed an intact GH criterion using Liberty Ship and T-2 tanker type vessels as the data base. This criterion has remained in effect and is referred to as the weather criterion (now in 46 CFR 170.170). The vessels in the data base had limited superstructure and carried their deadweight inside the buoyant envelope. Consequently, the center of the buoyant envelope was near the center of gravity (much like a submarine or an OBO). This provided a large range of stability and lots of righting energy, even with fairly small GH. Also, the vessels in the data base were much larger than T-boats and much smaller than car carriers.

b. Extrapolating Beyond the Data Base. Over the years the Coast Guard used the weather criterion to evaluate the intact stability of all sizes and types of vessels. NVIC 17-82 reveals the use of the weather criteria without proof of suitability for small vessels not represented in its data base. A lack of casualties attributed to impropriety in the criterion has precluded questioning its possible deficiency for vessel size. However, at least by the early 1960's it was realized that some vessels could meet the weather criterion with little righting energy and/or a very small range of stability. A criterion to ensure good energy and a reasonable range was needed.

c. The Broad Shoal Correction. In the 1950's a correction to the GH required by the weather criterion was developed for vessels whose waterplane narrowed with heel, due to chine emersion typical on broad shoal vessels. The correction was discontinued in the 1970's. It was an increase in the required GM equal to the upright BH times the average percent of upright BM not acting through the heel range of interest (deck edge or 28 degrees). The average percent of BM acting was approximated by trapezoidally integrating the cube of the ratio of actual waterline breadth at amidships to upright waterline breadth at amidships. The three heel angles used were upright, deck edge immersion (or 28 degrees), and the mid angle.

6.E.20. d. The Rahola Criterion And Offshore Supply Vessels. MMT Note 4-64 contained a parametric chart for finding required GM for broad shallow draft hulls of the OSV type. It ensured the 15 foot-degrees proposed as a criterion by J. Rahola of Finland. His recommendation was based on a 1939 study of coastal cargo vessels. The chart was made to reduce the necessity for preparing cross curves in an age when computers were rare. The Rahola criterion is now in the Marine Safety Manual (offshore supply vessels).

e. True Technical Definition Of Unusual Proportion And Form. Shallow draft vessels are traditionally wide and have little depth, like a deck cargo barge. Ocean-going ships are traditionally narrow and deep. Since the weather criterion was based on the latter, that arrangement is of "usual proportion and form." Likewise, the ocher arrangement is of "unusual proportion and form." The real key is the vertical separation between the center of the buoyant envelope and G. All hull forms have a buoyant envelope, therefore the primary variable in establishing this special relation is G. The tendency to define unusual proportion and form as "hard-chine" is not correct. A typical tankship with a right angle at the turn of the bilge has nearly identical righting arms as if it had a generous radius at the turn of the bilge. Righting arms are a volume property and are therefore very insensitive to local geometry -- global geometry (B/D, d/D, deadrise, flare, etc.) affects righting arms. The hard chine happens to be a common characteristic of vessels with G located well above the buoyant envelope. These vessels should be better described as broad and shallow vessels with considerable structure or deadweight above the buoyant envelope.

f. Why 46 CFR 170.173 And Not Rahola. Through the 1960's and 1970's the Coast Guard applied the Rahola criteria to deck barges, OSV's, crewboats, lifting vessels, and any other vessel of unusual proportion and form which was recognized as such. During this period IMO developed international standards which were recognized through NVIC 3-73. Those criteria were better suited for the narrower and deeper vessels typical of Europe (B/D = 2) than the wider and shallower vessels of the U.S. (especially below the 100m upper limit for the criteria). Consequently, when the IMO criteria were placed into Coast Guard regulations an alternate but similar criteria was included. Because the U.S. is a party to IMO it uses the internationally recognized criteria as much as possible. Rahola can still be accepted based on the equivalency provision. Note chat the intact criteria for tugboats is essentially an IMO criteria and that no equivalent is needed because tugs are not extreme cases of unusual proportion and form.

g. Range Of Stability. GM is of primary importance in response to small heeling forces. Righting energy is of primary importance in response to severe heeling forces. Vessels may be of unusual proportion and form to the point where the Rahola criterion may be met without

6.E.20. g. (cont'd) ensuring a good range of stability. The range of stability is important in relatively heavy seas and when riding in beam seas. Vessels of usual proportion and form will have a range of stability well past 30 degrees of heel. Vessels of unusual proportion and form need a range requirement. 46 CFR 170.173 uses energy beyond 30 degrees to ensure a range, the MSM requires a 40 degree range for OSV's, the regulations require a 90 degree range for sailboats and a 60 degree range for tugboats. The range requirement reflects both the size of the vessel and its service. Large deck barges are the most severe case of unusual proportion and form and can meet the Rahola criterion with a range of stability of as little as 10 degrees. Typically, deck barges are large relative to the waves and prudent operators minimize the effects of the sea.

h. Hull Form Characteristics. Characteristics of the righting arm curve are readily evident from the global shape of the buoyant hull. For example: high outboard buoyant volume will give a good range. A large beam to draft ratio will give good GM. Characteristics of the righting arm curve are also readily evident from where the deadweight is carried. For example: ore is both within the buoyant envelope and low in the hold. Containers on a barge are well above the buoyant volume. The following are generalities for full forms with righting arm characteristics evident from their global shape and/or their loading.

Deck barge	huge GM/minimal range light	high DWT/no supstr
catamaran	huge GM/early max RA/good range	buoyant shift
river excursion	large GM/minimal range	high DWT/high strut
OSV	large GM/minimal range light	high DWT/some supstr
containership	small GM/good range	mid DWT/good fbd
SWATH	minimal GM/good range	huge fbd-supstr
OBO, bulker	large GM/large range	low DWT/good fbd
sail ballasted	small GM/great range	huge fbd/low DWT

i. Superstructure. Trim-Free. And Fixed-trim. The traditional method to calculate righting arms is to maintain a given trim regardless of the real world. It is quick and causes negligible error for traditional ships. However, it is misleading at best when the buoyancy of the hull form is not uniformly balanced longitudinally. Vessels with superstructure only at one end, such as OSV's and many tugs, will trim considerably at angles where the superstructure becomes immersed. The effect is pronounced at deep drafts, when the reserve buoyancy at one end is,proportionately large. When using the fixed-trim method this causes an artificial increase in righting arms at high angles and can even lead to a "double hump." this effect increases the angle of max RA and the range of stability. Due to the tradition of using this method, it is allowed for OSV's and tugboats, the two general hull forms where it introduces the largest error. More recent criteria specify trim-free since they are derived using that method.

6.E.20. j. Energy Balance Criteria. The MODU criterion has been in use about 20 years. It requires 1.4 times as much righting energy as there is wind heeling energy over a similar tense of angles. Absolute range, energy and GM are not required. DDS-079-1-d(6) is a USN design criterion for other than displacement monohulls. It requires 1.4 times as much residual righting energy as the vessel would absorb in returning from a specified angle of roll into the wind to the angle of equilibrium. Angle of roll into the wind and wind speed are critical parameters. The Coast Guard accepts this criterion as an equivalent to 46 CFR 170.170 and 170.173 when using 15 degrees and 60 knots. IMO has a very similar "heavy wind and roll" criterion which the Coast Guard placed into NVIC 5-86 for fishing vessels. IMO also has a weather criterion that the U.S. has yet to accept which is slightly less restrictive than 46 CFR 170.170.

k. Energy For Less than Ocean Service. None of the published energy criteria stipulate appropriate requirements for less than ocean service. The issue normally comes up with river barges and small passenger vessels. Traditionally, the Coast Guard required a 5 ft-deg Rahola for barges on river service and a 10 ft-deg Rahola for barges in service on lakes, bays, and sounds. CCGD8(mmt) studied certificated craft in determining what to require when righting energy became a requirement with the publication of Subchapter S in 1984. 10 ft-deg Rahola was required for passenger service on waters free from sea swells. For river (protected water) service, a range of stability of 25 degrees was required and for service on lakes, bays, and sounds (partially-protected service) a tense of stability of 30 degrees was required. At that time the passenger vessels reviewed by CCGD8(mmt) were generally of the barge hull paddlewheel type which are operated in calm water service and the crewboat hull form which is operated in waters with sea swells. 46 CFR 170.173 was required of the crewboat hull forms even if they were route limited to partially-protected waters since developed seas exist beyond the jetties. Vessels of the paddlewheel variety will not operate in developed seas because the vessel would pound and waves would crash over the deck. Good marine practice should be encouraged to preclude operations that could lead to downflooding or entrapping water in deckhouses or superstructure. The combination of little freeboard, little shear, open railings, and large exposed windows is not good marine practice. The prime energy criterion difficulty recently is the downflooding angle for 170.173. Relocating ER vents can and has been done. In calculating the downflooding angle the conservation of buoyancy is acceptable provided trimming is accounted for. When downflooding is a problem, using Rahola as an equivalent may be helpful since a low (15 or 20 deg) angle is allowed. Low downflooding angles are reasonable for restricted routes but generally not acceptable for exposed water service since survival depends on keeping the hull buttoned up.

21. Dynamically Supported Craft (DSC). DSC include foil-borne craft, air cushion vehicles (ACV's), and surface effect ships (SES). Such vessels

6.E.21. (cont'd) must comply with the requirements in Subchapter S when operated in the displacement mode. This is necessary since the dynamic mode of operation may not be maintained in service. Stability criteria for the non-displacement mode will be considered by Commandant in a concept review. The owner should propose criteria for consideration but compliance with recognized standards is expected. Compliance with the Code of SAFETY for Dynamically Supported Craft (IMO Resolution A.373) is encouraged in all cases. Operating manuals are required. Service trials must be addressed in detail and will be used to prove acceptable dynamic stability.

F. Load Lines

1. General Provisions.

a. Load Line Assignment And Certification. The responsibility and authority for the enforcement of the load line laws, 46 App. U.S.C. 86 and 88, and the 1966 International Convention on Load Lines, has been delegated to the Commandant by the Secretary of the Department of transportation (SECDOT). The regulations promulgated by the Commandant appoint the American Bureau of Shipping (ABS) as the prime assigning and issuing authority. However, the Commandant may appoint another assigning authority upon request of the owner. The Commandant may also appoint any "officer of the United States" for the purpose of assignment and certification of load lines; the Commandant will normally consider only an OCMI as the appointed officer. Such officers should exercise this authority only for delivery or other point-to-point voyages. They should refer all other cases to ABS.

b. Administration Of Load Line Statutes And Regulations. The load line statutes, regulations, and conventions referenced under paragraph 6.F.2 below indicate which vessels require load line assignment. The performance of necessary surveys relating to the condition of the vessel and correctness of markings, assignment of load lines, and the issuance of Load Line Certificates are functions performed by the load line assigning authority. The Load Line Certificate is required to be maintained in a current status by annual endorsement of the assigning authority. The issuance of the certificate and its validity are contingent upon annual surveys and inspections by the assigning authority, to verify compliance with the regulations as to correctness of the load line mark, the structural efficiency of the vessel, and the provision of effective protection to the vessel and crew.

c. Detection Of Violations.

(1) Introduction. The enforcement of the load line regulations is the joint responsibility of the Coast Guard district commander and the district director of U.S. Customs. Collectors of customs will act as agents of the Coast Guard. As a means of

6.F.1.c. (1) (cont'd) enforcement, routine checks are made of vessels by customs officers in conjunction with their normal duties. By those checks, it is contemplated that customs officers will report any apparent violations to the Coast Guard, and that the Coast Guard will follow the procedures in chapter 7, volume V of this manual to determine whether a vessel subject to the regulations has a valid Load Line Certificate, load lines conspicuously marked, and draft marks forward and aft; whether the proper log entries have been made; and whether the vessel is loaded in compliance with its Load Line Certificate and marks. Volume VI of this manual provides guidance to direct captain of the port (COTP) personnel conducting vessel boardings to be alert for load line violations. Detailed inspections and investigations shall nevertheless be conducted by marine investigators.

(2) Checks Of Vessels Departing On Or Arriving From A Foreign Voyage. These shall be the responsibility of the Coast Guard district commander but will normally be carried out by U.S. Customs Service officers in the course of their normal duties. Where customs officers are unable to carry out these checks or where violations come to the attention of the Coast Guard, the district commander will insure that the laws and regulations are complied with. Clearance may be refused to vessels found in violation of the load line regulations.

(3) Checks Of Vessels On Coastwise And Great Lakes Voyages. These are the responsibility of the district commander, and will normally be carried out by Coast Guard personnel (commissioned or warrant officer, petty officer, or civilian) designated for this task and trained in the requisite procedures and calculations by the OCMI.

(4) Employment Of Marine Safety Personnel. Marine SAFETY investigating officers are normally assigned to investigate suspected load line violations. On routine inspection duties, marine inspectors and other marine SAFETY personnel will observe whether load lines and draft marks are conspicuously marked and whether vessels appear to be overloaded. In addition, at the time of the inspection of a vessel for certification, the inspector shall examine its Load Line Certificate for validity and determine whether the proper log entries have been made. Any violations of the load line regulations observed by the I.O. or called to the I.O.'s attention shall be referred to the OCMI for resolution. In cases when a shortage of personnel does not permit a load line check to be made of every vessel, spot-check inspections shall be made insofar as available personnel permit, so that the most effective enforcement practicable is provided. [NOTE: Full cooperation should be maintained between the

6.F.1.c. (4) (cont'd) district director of customs and the district commander so as to provide the most efficient and complete inspection possible.]

2. References.

a. Load Line Statutes. The acts establishing load line requirements for U.S. vessels and foreign vessels operating in U.S. waters are found in 46 App. U.S.C. 86 and 88. They are as follows:

(1) Vessels In Foreign trade. The International Voyage Load Line Act of 1973 (46 App. U.S.C. 86-86i) applies to U.S. and foreign vessels-that arrive at or depart from any port or place within the jurisdiction of the U.S. from or for a foreign port. The act also applies to U.S. vessels engaged in voyages between foreign ports. This act does not apply to ships of war, pleasure craft not used in trade or commerce, fishing vessels, "existing vessels" (vessels whose keels were laid before 21 July 1968) of less than 150 gross tons (Gt), "new vessels" of less than 79 feet in length, and vessels that navigate exclusively on the Great Lakes. Vessels operating on sheltered waters between ports of the U.S. and neighboring countries, if provided for by a U.S. treaty, are also excluded. [NOTE: the U.S. has renounced the 1930 Load Line Convention; thus, it does not recognize 1930 Load Line Certificates, except as explained in subparagraph 6.F.2.b.(1) below.]

(2) Coastwise And Great Lakes Vessels. The provisions of the Coastwise Load Line Act of 1935, as amended, are contained in 46 App. U.S.C. 88-88i. This act applies to all U.S. and foreign merchant vessels of 150 or more GT that are loading at or proceeding from any U.S. port for a "coastwise voyage by sea," or are on a voyage proceeding from one port on the Great Lakes to another port on the Great Lakes. The above provisions are not applicable to certain merchant vessels engaged in certain aspects of the salmon or crab fisheries of the states of Oregon, Washington, and Alaska. These exceptions include cannery or fishing tender vessels of not more than 500 GT if constructed or contracted for before 1 January 1980, or if conversion to such service was begun or contracted for before 1 January 1980, so long as such conversion was completed prior to 1 January 1983. Similarly, vessels used in the processing or assembling of fishery products in the above states, of not more than 5000 GT, if constructed on or before 15 August 1974, or if converted on or before 1 January 1983, are excluded from the provisions of this law.

b. Load Line Conventions And Treaties.

(1) The International Convention On Load Lines, 1966. This Convention established standards for the surveying and marking of

6.F.2.b. (1) (cont'd) load lines on certain vessels making international voyages. It became effective on 21 July 1968. NVIC 5-83 contains three sets of Unified Interpretations of the 1966 Convention that have been approved by the Maritime SAFETY Committee of the International Maritime Organization. 46 CFR 42.03-10 states that, as of 22 July 1970, the only Load Line Certificate recognized by the United States is the 1966 International Load Line Certificate, unless a country is still within the maximum 2-year grace period set forth in Article 16(4) of the 1966 Convention. Article 16(a) states that any International Load Line Certificate that is current when the 1966 Convention comes into force for the government of the state whose flag the ship is flying, shall remain valid for 2 years or until the certificate expires, whichever is earlier. Article 17 of the 1966 Convention prohibits the issuance of a 1966 International Load Line Certificate to any vessel that is flying the flag of a state, the government of which is not a contracting government to the Convention. Such vessels are subject to the requirements of 46 App. U.S.C. 86-86i (as amended). 46 CFR 42.03-10 states that vessels of countries not parties to the 1966 Convention are subject to U.S. load line regulations when they are within the jurisdiction of the U.S. This means that such vessels must obtain Form B Load Line Certificates, which are valid only in U.S. navigable waters. Figure 6-21 gives the date of entry into force for each country. 1930 Load Line Certificates can be recognized for up to 2 years after the date of entry into force for that country for the 1966 Load Line Convention (provided the country was party to the 1930 Convention).

(2) International Convention For the Safety Of Life At Sea (SOLAS). 1974 (Load Line Provisions). Regulation 11 of Chapter II-1, SOLAS 1974 contains requirements for assigning, marking, and recording of subdivision load lines on passenger vessels subject to SOLAS 74 making international voyages.

FIGURE 6-21

COUNTRIES PARTY TO THE INTERNATIONAL CONVENTION ON LOAD LINES, 1966

NATION	DATE
Algeria*	4 JAN 77
Argentina*	3 SEP 71
Australia*	29 OCT 68
Austria	4 NOV 72
Bahamas	22 OCT 76
Bahrain	21 JAN 86
Bangladesh	10 AUG 78
Barbados	1 DEC 82

FIGURE 6-21 (cont'd)

NATION	DATE
Belgium*	22 APR 69
Benin	1 FEB 86
Brazil*	12 DEC 69
Bulgaria*	30 MAR 69
Cameroon	14 AUG 86
Canada*	14 APR 70
Cape Verde	28 JUL 77
Chile*	10 JUN 75
China (PRC)	5 JAN 76
Cuba*	6 MAY 69
Cyprus*	5 AUG 69
Czechoslovakia*	16 SEP 69
Denmark*	21 JUL 68
Djibouti	1 MAR 84
Dominican Republic*	28 SEP 73
Ecuador*	12 APR 76
Egypt	6 MAR 69
Ethiopia	18 OCT 85
Fiji	1 MAR 73
Finland*	15 AUG 68
France*	21 JUL 68
Gabon	21 APR 82
German Democratic Republic	15 AUG 75
Germany', Federal Republic of*	9 JUL 69
Ghana*	25 DEC 68
Greece*	12 SEP 68
Guinea	19 APR 81
Honduras	16 FEB 78
Hungary*	25 DEC 73
Iceland*	26 SEP 70
India*	21 JUL 68
Indonesia	17 APR 77
Iran	5 JAN 74
Ireland*	28 NOV 68
Israel*	21 JUL 68
Italy*	21 JUL 68
Ivory Coast*	19 OCT 71
Jamaica	18 NOV 82
Japan*	15 AUG 78
Kenya	12 DEC 75
Korea, Republic of*	10 OCT 69
Kuwait*	28 NOV 68
Lebanon	7 OCT 70
Liberia*	21 JUL 68
Libyan Arab Jamahiriya	12 NOV 76
Malagasy Republic*	21 JUL 68

FIGURE 6-21 (cont'd)

NATION	DATE
Malaysia*	12 APR 71
Maldives	21 JUL 68
Malta	11 DEC 74
Mauritania*	21 JUL 68
Mexico*	25 JUN 70
Monaco	25 JUN 70
Morocco	21 JUL 68
Netherlands*	21 JUL 68
New Zealand*	5 MAY 70
Nigeria*	14 FEB 69
Norway*	21 JUL 68
Oman	20 NOV 75
Pakistan*	5 MAR 69
Panama*	21 JUL 68
Papua New Guinea	18 AUG 76
Peru*	21 JUL 68
Philippines	4 JUN 69
Poland*	28 AUG 69
Portugal*	22 MAR 70
Qatar	1 MAY 80
Romania*	3 SEP 71
Samoa	23 JAN 80
Saudi Arabia	5 DEC 75
Senegal	18 NOV 77
Seychelles	1 JAN 77
Singapore	21 DEC 71
Somalia	21 JUL 68
South Africa	21 JUL 68
Spain*	1 OCT 68
Sri Lanka	10 AUG 74
Suriname	25 NOV 75
Sweden*	21 JUL 68
Switzerland*	23 JUL 68
Syrian Arab Republic	6 MAY 75
Tonga	12 MAY 77
Trinidad & Tobago	21 JUL 68
Tunisia	21 JUL 68
Turkey*	5 NOV 68
Tuvalu	22 NOV 85
United Arab Emirates	15 MAR 84
United Kingdom*	21 JUL 68
United States*	21 JUL 68
U.S.S.R.	21 JUL 68
Uruguay	18 JUL 77
Vanuatu	28 OCT 82
Venezuela*	15 JAN 75

FIGURE 6-21 (cont'd)

Vietnam*	14 SEP 68
Yemen, Arab Republic (SANAA)	6 JUN 79
Yemen, Peoples' Democratic Rep.	20 AUG 69
Yugoslavia*	25 JAN 69
Zaire	20 AUG 68
Zambia	2 DEC 70

The Convention has been extended to:

NATION	DATE
Netherlands Antilles	21 JUL 68
Hong Kong	16 AUG 72
Bermuda	1 APR 75
Isle of Man	19 OCT 84
Puerto Rico, Guam, U.S. Virgin Islands, American Samoa, the Trust Territories of the Pacific Islands, Canal Zone	9 SEP 75
Midway, Wake, Johnston Islands	18 MAR 76

[NOTE: *Also party to the International Convention on Load Lines, 1930.]

(3) Treaty Between the U.S. And Canada Defining Certain Waters Of the West Coast Of North America As Sheltered Waters (49 Star. 2685). By this treaty, the United States and Canada agreed to exempt Canadian and U.S. vessels from the provisions of the 1930 Load Line Convention, as authorized therein, and from the provisions of existing laws with respect to load lines when engaged on international voyages originating on, wholly confined to, and terminating on the defined waters. This treaty is held to be equally valid to exempt subject vessels from the provisions of all international load line requirements and agreements entered into to date, other than the passenger vessel subdivision load line requirements of SOLAS 1960 or 1974 and 46 CFR Part 46. The terms of the treaty can be found in COMDTINST M16707.1 (old CG-242). Under the terms of this treaty, the regulations in 46 CFR, Subchapter E issued pursuant to the International Load Line Act of 1973 and the Coastwise Load Line Act of 1935, do not apply to Canadian or U.S. vessels operating on the "sheltered waters" defined as follows:

> ". . .the waters of Puget Sound, the waters lying between Vancouver Island and the mainland, and east of a line from a point one nautical mile west of the city limits of Port Angeles in the state of Washington to Race Rocks on Vancouver Island, and a line from Hope Island, British Columbia, to Cape Calvert, Calvert Island, British Columbia,

6.F.2.b. (3) (cont'd) the waters east of a line from Cape Calvert to Duke Point on Duke Island, and the waters north of Duke Island and east of Prince of Wales Island, Baranof Island, and Chicago Island, the waters of Peril, Neva, and Olga Straits to Sitka, and the waters east of a line from Port Althorp on Chicago Island to Cape Spencer, Alaska.. '

c. Load Line Regulations.

(1) General. The Load Line Resulations are contained in 46 CFR 42 and 44-46 (Part 43 has been cancelled and reserved). These regulations implement the provisions of the statutes, conventions, and treaties previously cited, and have the force and effect of law. The regulation Parts are entitled as follows:

(a) Part 42 - Domestic and foreignvoyages by sea.

(b) Part 43 - (Reserved).

(c) Part 44 - Variance for certain vessels.

(d) Part 45 - Great Lakes load lines.

(e) Part 46 - Subdivision load lines for passenger vessels.

(2) Subdivision Load Lines. 46 CFR 46 contains requirements for subdivision load lines on certain U.S. and foreign passenger vessels engaged in foreign voyages, and on certain U.S. and foreign passenger vessels of 150 or more GT engaged in coastwise or Great Lakes voyages. The specific application is in 46 CFR 46.01-15.

(3) References. The following references may be helpful in understanding the standards and procedures associated with obtaining a load line:

(a) "Load Line Assignment" by Cleary and Ritola; Society of Naval Architects and Marine Engineers (SNAME); 1980.

(b) "Load Line Assignment" by Robert t. Ryan; Principles of Naval Architecture; SNAHE; 1967.

3. Load Line Definitions And Explanations.

a. Assigning Authority For U.S. Vessels.

(1) General. The term "assigning authority" refers either to ABS or to another recognized classification society that has been approved by the Commandant as a load line assigning and issuing authority for a specific vessel. The prime assigning and issuing

6.F.3.a. (1) (cont'd) authority for U.S. is ABS, as specified in 46 App. U.S.C. 86d and 46 App. U.S.C. 88b. Other recognized classification societies maybe specifically authorized by Commandant (G-MTB) to assign load lines to a specific vessel upon written request by the vessel owner.

(2) Application For Assignment. Application for load line assignment is made directly to ABS, except as noted below. Before ABS issues a Load Line Certificate, it must receive a letter from the Coast Guard stating that the stability analysis has been conducted and stating what stability information must be aboard the vessel (see NVIC 10-83).

b. Stability Approval.

(1) Stability Review. A vessel's stability review for load line is normally conducted by the MSC. NVIC 10-83 describes procedures for advising ABS of the proper stability information to be placed on the load line certificates.

(2) Annual Revalidation. At each annual revalidation of the certificate, the ABS surveyor should verify that the approved stability information is on board.

(3) Exception to the Procedure For Vessels Not Receiving Stability Letters. There is one exception to the procedures in NVIC 10-83. Presently, there are no specific stability or longitudinal strength requirements for inland cargo barges (any length) or inland tank barges less than 300 feet in length, carry ing cargoes regulated by Subchapter D (except liquefied flammable gases). For these inland barges, ABS may issue a load line for certain specific routes without stability authorization from the Coast Guard. The maximum draft assigned should correspond to the geometric freeboard assignment. The following statements (modified as appropriate) shall be included on the Load Line Certificate:

> "Routes shall be limited to unmanned fair weather voyages only, not to exceed 20 miles from shore between St. Marks and Carrabelle, Florida, and not more than 5 miles from a harbor of safe refuge between Chicago, Illinois, and Burns Harbor*, Indiana. No specific stability information is required." [NOTE: *Gary, Indiana, may be authorized in lieu of Burns Harbor.]

(4) Exchange Damage Stability Information From Coast Guard to ABS. The Coast Guard reviews and approves damage stability calculations for type A (tank vessel) freeboard assignments (see NVIC 2-76 and 46 CFR 42.20-6), passenger vessels (see 46 CFR 171), oceanographic research vessels (see 46 CFR 173, Subpart D),

6.F.3.b. (4) (cont'd) school ships (see 46 CFR 173, Subpart c), and other types of vessels. ABS must be cognizant of any restrictions imposed by the Coast Guard on these vessels for load line assignment. Therefore, after reviewing the damage stability calculations, the MSC shall forward to ABS a copy of their approval letters, which shall include:

(a) Reference to the vessel's stability letter or any necessary loading restrictions;

(b) Any special arrangements to prohibit downflooding;

(c) Identification of bulkheads that must be maintained watertight, and to what level in the vessel they must be maintained watertight; and

(d) Maximum allowable draft.

(5) Exchange Of Damage Stablity Information From ABS to Coast Guard. Except as provided in subparagraph 6.F.3.b.(6) below, ABS reviews and approves damage stability calculations for type B-60 and B-100 freeboard assignments in accordance with 46 CFR 42.20-7 and 42.20-8. However, the Coast Guard has the responsibility to issue stability letters and approve trim and stability booklets for all vessel types. Accordingly, the Coast Guard must be cognizant of any operating restrictions or GM limitations imposed by ABS on type B-60 and B-100 vessels in approving stability information. The following explains the procedure for the exchange of information between ABS and the Coast Guard for type B-60 and B-100 vessels:

(a) ABS will inform the MSC that the owner is requesting a B-60 or B-100 freeboard assignment;

(b) ABS will forward to the MSC a copy of its letter approving damage stability calculations, which must include:

(i) Any loading restrictions;

(ii) Any required KG versus draft restrictions;

(iii) Any special arrangements to prohibit downflooding; and

(iv) the estimated lightship values used.

(c) The MSC will compare the approved lightship values with the estimated values used in the damage stability calculations and, if necessary, require that the damage stability calculations be redone using the approved lightship values.

6.F.3.b. (5) (d) the Coast Guard will ensure that the above restrictions are incorporated in the trim, stability, and loading information approved by the Coast Guard.

(6) Special Procedures For Hopper Dredges. The MSC will review all stability calculations for the "working freeboards" of hopper dredges. It will not be necessary for the designer to submit the B-60 and B-100 damage stability calculations to ABS.

c. Action By the OCMI As Load Line Assigning Authority. Although OCMI's should not normally act as assigning authorities, there are two instances in which they should exercise their authority under the load line acts:

(1) Issuance Of International Load Line (Single Voyage) Exemption Certificates. For a U.S. vessel that is required to make a single international voyage, as defined in Article 6(4) of the 1966 Load Line Convention (e.g., a delivery or scrapping voyage, or change in employment), the OCMI may issue an International Load Line Exemption Certificate if, in the OCMI's opinion, the vessel is safe to make the voyage. Normally, the vessel should not be permitted to carry passengers or Cargo. The form of the International Exemption Certificate is found in 46 CFR 42.50-5(e). A sample certificate is contained in Figure 6-22. Copies of all such exemptions issued by the OCMI should be sent to Commandant (G-HtH-3) for information.

(2) Issuance Of Coastwise/Great Lakes Single Voyage Load Line Authorization Letter. For a vessel that does not normally engage in coastwise or Great Lakes voyages, which must make a single voyage for delivery, change in employment, or drydocking, the

FIGURE 6-22

Commanding Officer
Marine Safety Office
Federal Building, Customhouse
5th and Austin Ave.
Port Arthur, TX 77640

INTERATIONAL LOAD LINE EXEMPTION CERTIFICATE

(Certificate No.)

Issued under the provisions of the International Convention on Load Lines, 1966, under the authority of the Government of the United States of America, and the Commandant, U.S. Coast Guard:
By U.S. Coast Guard Officer in Charge, Marine Inspection, Port Arthur, Texas, and duly authorized for assigning and exemption purposes under the provisions of the Convention.

[Name of ship]	[Official Number or distinctive letters]	[Port of registry]

This is to certify that the above-mentioned vessel is exempted from the provisions of the 1966 Convention, under the authority conferred by Article 6(4) of the Convention referred to above, and that this vessel has been surveyed accordingly.

The voyage for which this exemption is granted under Article 6(4) is:

From: Port Arthur, Texas, U.S.A.

To: Koahsiung, Taiwan, Republic of China

*Conditions: All openings to the hull shall be closed and securely fastened. The vessel is to proceed without passengers, crew, or cargo.

This Certificate is valid until [date] or until arrival at Koahsiung, Taiwan, Republic of China.

Issued at Port Arthur, Texas, (date).
(signature)
Officer in Charge, Marine Inspection

*NOTE: the above conditions are examples. The OCMI will specify the actual conditions.

6.F.3.c. (2) (cont'd) OCMI may issue a single-voyage load line authorization in accordance with 46 CFR 42.03-30(f). This authorization should take the form of a Coastwise Load Line Certificate, with the conditions under which the voyage may be made stated on the front including a statement specifying the ports of departure and arrival. Normally, the vessel should not be permitted to carry passengers or cargo. The extent of the survey required to issue a single voyage Load Line Certificate should be limited to that necessary to ensure that the vessel will make the voyage safely, and need not follow the exact survey requirements found in 46 CFR, Subchapter E. Nevertheless, the OCMI should be guided by the general elements of seaworthiness found in the regulations. Any specific requirements for the voyage should be listed on the certificate. Figure 6-23 provides a sample single-voyage Coastwise Load Line Certificate.

(3) Application Requests. Application for a single voyage International Load Line Exemption Certificate or a single voyage Coastwise Load Line Certificate should be made in writing by the vessel's owner to the OCMI. All other requests for exemptions (i.e., novel craft, sheltered voyages, etc.) should be addressed in writing to the Commandant (G-MTH).

d. "Foreign Voyage." See 46 App. U.S.C. 86b.

e. "Coastwise Voyage By Sea." This is a voyage on which a vessel, in the usual course of its employment, proceeds from one port or place in the United States or its possessions to another port or place in the U.S. or its possessions and, in so doing, passes outside the line dividing inland waters from the high seas; the lines dividing inland waters from high seas are set forth in 46 CFR 7. The Chief Counsel of the Coast Guard has determined that vessels that cross the boundary line but return to the same port are not subject to the Coastwise Load Line Act. However, offshore supply vessels that cross boundary lines and service offshore fixed or floating platforms are subject to the Coastwise Load Line Act, as these platforms are considered "places in the United States."

f. "Great Lakes Voyage." This is a voyage made by a vessel from any port or place on the Great Lakes to any other port or place on the Great Lakes. Except as provided below, vessels of 150 or more GT operating on any of the Great Lakes, their bays, sounds, or straits, and in those harbors that are beyond the protection of breakwaters forming complete protection against heavy seas and other rigors of the lakes, are required to be marked with load lines. For application of the Load Line Regulations, the St. Lawrence River west of a straight line drawn from Cap de Rosters to West Point, Anticosti Island, and west of a line along longitude 63 degrees west from Anticosti Island to the north shore of the St. Lawrence River, is considered as part of the Great Lakes. The requirements of a load line assignment will not normally be imposed on unmanned Great Lakes dump scows employed on routine operations within 10 miles of a harbor of safe refuge. This

FIGURE 6-23

Officer in Charge
U.S. Coast Guard
Marine Safety Office
1055 E. Ninth Street
Cleveland, OH 44114
Tel: (216) 522-4A05
16711
[Date]

ABC Dredging Company
106 1st Street
Chicago, IL 60601

COASTWISE LOAD LINE CERTIFICATE

Issued under the provisions of title 46, Code of Federal Regulations, 42.03-30(f) by U.S. Coast Guard Officer in Charge, Marine Inspection, Cleveland, Ohio, to:

DREDGE ABC, O.N. xxxxxx

This Certificate is valid only for a voyage from Cleveland, Ohio, to Staten Island, New York, coastwise, to arrive not later than [date] *[with no cargo or passengers, and unmanned except not more than four (4) maintenance persons allowed. All openings to the hull shall be closed and securely fastened.]

This Certificate is valid until [date] or until arrival at Staten Island, New York. Issued at Cleveland, Ohio, [date].

(signature)
Officer in Charge, Marine Inspection

*NOTE: The above conditions are examples. The OCMI will specify the actual conditions.

6.F.3. f. (cont'd) exclusion is to include the occasional movement of these dump scows without cargo from a given port to a different port of operation. In lieu of a load line assignment, a draft limitation may be imposed by the cognizant OCMI, if in his or her opinion such a limitation is deemed necessary-to assure the safety of life or property. If a draft limitation is imposed by the cognizant OCMI, a standard of 10 foot-degrees of righting energy to the angle of maximum righting arm will be used to determine the required freeboard.

g. "Special Service Voyage." This is a voyage between ports, in the trades, and under conditions of operation as specified in the Special Service Load Line regulations. Special service load lines and their certificates are valid only for coastwise (20 mile offshore limit) voyages within limited areas of trade as specified in 46 CFR Part 44. Special service freeboards are not applicable to the Great Lakes. Only steam colliers, tugs, barges, and self-propelled barges on coastwise voyages were originally eligible for "special service" load lines under Section 2 of the Coastwise Load Line Act of 1935 (46 App. U.S.C. 88a). This act was amended in 1962 by P.L. 87-620, which deleted from the law direct references to steam colliers, tugs, barges, and self-propelled barges. However, the authority for and the provisions of 46 CFR 44 remain effective.

h. "In the Usual Course Of Its Employment." This term generally refers to vessels that regularly trade by way of the ocean between coastal or inland ports of the United States or between any ports on the Great Lakes. A vessel whose usual employment is on inland waters, as defined in the Pilot Rules, and which occasionally, because of exigencies, crosses the dividing line onto the high seas does not necessarily violate the Coastwise Load Line Act. For example, a harbor tug proceeding to sea for relief of a vessel in distress, or a dredge whose operation is confined to a particular port, but which in an emergency is taken to another port, does not violate the law. It is stressed that this definition and the examples above relate to "emergency" vessel activities. A vessel that, in the course of its merchant activities (e.g., towing, in the case of a towboat; carry ing cargo deadweight, in the case of a barge [regardless of cargo-ownership]), performs this function on a single coastwise or foreign voyage is subject to load line assignment. Any question as to the application of this phrase in a specific case dealing with a coastwise voyage not related to the performance of usual merchant functions of the vessel should be referred to the district commander (m).

i. Operation "In Fair Weather Only." Load lines may be authorized for unmanned inland barges on certain specific routes "in fair weather only." The route between St. Marks, Florida, and Carrabelle, Florida, may be considered an extension of lakes, bays, and sounds service for stability purposes. The barge will be restricted to unmanned fair weather voyages only, not to exceed 20 miles from shore. The Great

6.F.3. i. (cont'd) Lakes route between Chicago, Illinois, and Gary or Burns Harbor, Indiana, maybe considered an extension of river service for stability purposes. The barge will be restricted to unmanned fair weather voyages only, not more than 5 miles from a harbor of safe refuge. Hopper barges may be permitted to travel beyond Burns Harbor to Michigan City, Indiana, provided they are fitted with weathertight hatch covers. Barges built to inland structural standards may operate on these routes, within 5 miles from shore, without structural modification.

j. Applicable Load Lines. The particular load line applicable to the port and season is determined by reference to the load line regulations. For foreign, coastwise, and special service load lines, see 46 CFR 42.30 and 44.05-10, and the Zones and Seasons Areas Chart in CG-176. For Great Lakes load lines, see 46 CFR 45.5 and 45.9.

k. Toledo Harbor And Port Huron, Michigan. When 46 CFR Part 45 was written in 1973, a special provision for vessels on voyages between toledo Harbor and Port Huron was dropped. Commander, Ninth Coast Guard District has been advised that the District may continue to permit individual vessels to load to their summer marks between October 1 and April 15, inclusive, when engaged on voyages between the limits of Toledo Harbor and Port Huron, Michigan. A change to the regulations will be proposed to reinstate this provision.

l. Subdivision Load Lines.

(1) General. U.S. assigned subdivision load lines are determined by the Coast Guard for passenger ships. The subdivision load line corresponds to the maximum draft at which a vessel may operate. The position of the subdivision load line is determined by consideration of the bulkhead subdivision of the vessel. The subdivision load line (based on passenger vessel stability and subdivision requirements) cannot be exceeded even if the geometric and seasonal load line, otherwise determined, would permit a greater draft. In such cases, the seasonal load line, otherwise determined, would ordinarily not be marked on the vessel.

(2) Subdivision Load Lines Required On Passenger Vessels. These are specified in 46 CFR 46.01-15(a). The definition of passenger vessels for load line purposes is specified in 46 CFR 46.05-1. The specifications for the marking of these load lines on the vessel are contained in 46CFR 46.15-10. The subdivision load lines assigned to passenger vessels are required to be noted on the vessel's Load Line Certificate, and on the vessel's Safety Certificate when subject to the 1974 SOLAS Convention.

4.F.3.1. (3) Subdivision Load Lines Required On Small Passenger Vessels. Small passenger vessels or "T-Boats" (less than 79 feet in length, regulated under 46 CFR, Subchapter T) on international voyages do not require Load Line Certificates; however, they do require subdivision "load lines" or draft marks. Under Regulation 11, Chapter II-1 of SOLAS 74, a subdivision "load line" must be assigned and marked on the sides of vessels subject to SOLAS 74 (vessels carry ing more than 12 passengers). Since these vessels are not subject to the load line regulations, no disk or "Plimsoll mark" is assigned. "Therefore no details regarding the marking of the subdivision draft(s) on the sides of the vessel are specified. Marking is, therefore, at the discretion of the OCMI. For uniformity, however, the following is recomended:

(a) The subdivision "load line" marks will be horizontal lines, 9 inches in length and 1 inch in breadth, placed amidships on both sides of the vessel.

(b) The lines shall be painted in white or yellow on a dark background, or in black on a light background.

(c) Based on the subdivision study, the MSC will determine the proper placement for the marks and relay this information to the OCMI accordingly. See subparagraph 6.E.9.a above concerning the damage stability and subdivision requirements for T-Boats making international voyages. Volume II of this manual contains policy on the granting of exemptions from SOLAS 74 requirements to certain of these vessels making voyages not more than 20 miles from the nearest land.

m. Timber Load Lines. A timber load line is a special load line to be used only when the vessel is carry ing at least a minimum deck load of timber stowed in strict accordance with the regulations in 46 CFR 42.25, whether or not additional timber is carried below deck.

n. Netchant Vessels. A vessel is a "merchant vessel" within the purview of the Load Line Acts when engaged in commerce, even though the vessel is not documented to engage in foreign or domestic trade; examples of such vessels include undocumented oceanographic or research vessels. The definition of a merchant vessel for load line purposes is not necessarily related to whether or not cargo or passengers are carried "for hire." A vessel characterized as a "merchant vessel" retaing this status, even though on a particular occasion it may carry neither passengers nor cargo. The Coastwise Load Line Act of 1935 includes steam colliers, tugs, barges, and self-propelled barges within the classification of "merchant vessels." This is to be considered a legislative definition; therefore, such vessels are merchant vessels for load line purposes. Upon revision of this act in 1962 (see 46

6.F.3. n. (cont'd) App. U.S.C. 88a), direct reference to this group of vessels was deleted. Although they are no longer addressed directly in the statutes, the pertinent regulations remain effective and the interpretation of these vessels as "merchant vessels" is still valid.

o. Fishing Vessels. Fishing vessels are not normally subject to the provisions of the Load Line Acts (coastwise or foreign service) or the load line regulations. Cannery tender or fishing vessels are subject to load lines for vessels engaged in "coastwise trade," provided the exceptions of 46 U.S.C. 88(b) de not apply. In the REEFER KING case (90 Fed. Supp. 236), however, a fishing vessel of 527 GT was found to be in violation of the Load Line Acts when it carried a general cargo that had not complied with the regulations. Vessels regularly engaged in fishing that, on occasion, take aboard the catches of other U.S. fishing vessels at sea for transport to U.S. ports, purely on an accommodation basis (i.e., without charge), are not subject to a requirement for load line assignment (P.L. 87-177, 87th Congress, S1222, 30 Aug 1961).

p. Small Vessels. Vessels of less than 79 feet in length are not required by the International Convention on Load Lines, 1966 to obtain a load line. The United States will not, even upon request, issue a Load Line Certificate to a vessel of this size for several reasons, two of which are:

(1) The seakeeping and stability characteristics of a vessel of this size may not be adequate for unrestricted ocean service.

(2) The geometric load line calculation and the conditions of assignment in the load line regulations were not developed considering a vessel of this size.

4. Load Line Certificates And Markings.

a. Valid Certificates And Markings. The validity of Load Line Certificates, and procedures and requirements for their renewal, are covered by 46 CFR 42.09-15, 44.01-5, and 45.11. The following load line assignments (i.e., certificates and markings) only are valid:

(1) Load lines issued to and marked on U.S. vessels under the authority of the United States (valid for a maximum period of 5 years under the law, subject to annual endorsement by assigning authority);

(2) Load lines issued to and marked on foreign vessels under the authority of the U.S.;

(3) Load lines issued and marked, under the authority of a foreign government that is a party to the International Convention on

4.F.4.a. (3) (cont'd) Load Lines, 1966, to vessels of its own registry (valid for amaximum period of 5 years under the convention, subject to annual endorsement);

(4) International load lines issued and marked under the authority of a foreign government that is a party to or has acceded to the International Convention on Load Lines, 1966, to vessels registered under another Contracting State upon the request of their Administration; and

(5) Load lines issued and marked under the authority of a foreign government that has load line regulations equivalent to those of the U.S., and with which an agreement has been reached for reciprocal recognition of load lines. On this basis, load lines for Cargo vessels and tankers on Great Lakes waters issued by Canada are accepted as equivalent to corresponding U.S. load lines.

b. Extension Of Load Line Certificates On U.S. Vessels. ABS may issue a one time extension of a Load Line Certificate for a maximum of 5 months providing a complete periodical survey has been carried out as required for the issuance of a new certificate. This extension is provided to allow the necessary survey reports and documents to be processed without unduly restricting a vessel's operation. An extension of the current certificate may be granted with the Commandant's prior approval if there are unusual circumstances by which the complete periodical survey, particularly the drydocking, cannot be accomplished. Mere convenience of the owner is not a valid reason for extension. There must be a physically compelling reason for the extension, such as:

(1) Drydock space has been cancelled; or

(2) The vessel is delayed unavoidably due to damage, repairs or breakdowns and cannot stop at a port in which there is an ABS surveyor.

Requests for an extension should be directed to Commandant (G-HVI-1) and will only be granted if a condition survey afloat has been carried out and the vessel is found to be "fit to proceed." This survey must confirm that there have been no alterations in the structure, equipment, arrangements or scantlings which would affect the vessel's freeboard assignment. When granted, the extension is for the exact amount of time required to address the vessel's specific problem with an extension not to exceed 150 days. ABS will advise the owner at the time of extending a certificate that the certificate will not be renewed until all items required for a periodical survey have been

6.F.9. b. (cont'd) completed. The new permanent 5-year Load Line Certificate, when issued By ABS Headquarters, should Be given an expiration date which is not later than the fifth anniversary of the expiration of the earlier certificate.

c. International Load Line Certificate Exemptions. The conditions under which exemptions to international load line requirements may be granted are found in 46 CFR 42.03-30(a)-(d). Either the exemptions are specified on the face of the certificate (46 CFR 42.03-30(c)) or an Exemption Certificate is issued (46 CFR 42.03-30(d)). Vessels given exemptions for sheltered voyages under 46 CFR 42.03-30(B)(1) are issued a regular load line certificate (Form A1, A2 or A3) with exemptions listed on the face of the certificate. Exemptions for novel vessels under 46 CFR 42.03-30(b)(2) require both an Exemption Certificate (Form E1) and a regular Load Line Certificate. Exemptions for single voyages (e.g. for delivery and change of employment) under 46 CFR 42.03-30(b)(3) are usually issued by the OCMI and require only an Exemption Certificate. See subparagraph 6.F.3.c.(1) above concerning Exemption Certificates issued by the OCMI. Requests for single-voyage International Load Line Exemption Certificates should be made by the vessel owners to the cognizant OGMI; all other exemption requests should Be addressed to the Commandant (G-MTH) via the authorized load line assigning authority.

d. Coastwise Load Line Certificate Exemptions. There has been some question concerning the legality of issuing a formal Exemption Certificate for vessels under the Coastwise Load Line Act of 1935. That law states that "...due consideration shall be given to, and differentials made for, the various types and character of vessels and the trades in which they are engaged." One such consideration is specified in 46 CFR 42.03-30(e). The Coast Guard uses this stipulation to allow other exceptions to domestic load line standards such as "working freeboards" for hopper dredges provided that an equivalent level of safety to those standards are assured. Except as specified in subparagraph 6.F.4.e below, requests for all such exceptions should be made by the vessel owner to Commandant (G-MTH) via the authorized load line assigning authority.

e. Single-Voyage Coastwise Load Line Certificates. The conditions under which the OCMI may issue a single-voyage Coastwise Load Line authorization is found in 46 CFR 42.03-30(f). See also subparagraph 6.F.3.c.(2) above.

5. Types Of Required Load Line Marks.

a. For Vessels On Ocean, Or Ocean-And-Great Lakes Voyages. Load lines applicable to vessels engaged on ocean or ocean-and-Great Lakes voyages are indicated by a disk with a horizontal line through the center (plimsoll mark), painted in contrasting color and permanently marked (i.e., weld beading) on the sides of the vessel amidships below

6.F.5. a. (cont'd) the deck line. The seasonal lines (salt water) point away from the disk; the letters W, S, and T indicate the appropriate season (winter, summer, tropical) for which they apply. Winter, North Atlantic (WNA) is applicable only in the winter season to vessels less than 328 feet in length. The fresh water lines point toward the disk; they indicate the line to which a ship can be loaded in virtually fresh water and emerge to the corresponding salt water line when the vessel reaches salt water (see 46 CFR 42.13-25 and 42.13-30). In all cases, the top of each line indicates the maximum draft to which the vessel may be loaded in the corresponding service condition.

b. For Vessels On Great Lakes Voyages. Load lines applicable to vessels engaged solely in voyages on the Great Lakes are indicated by a diamond with a horizontal line. Seasonal lines for fresh water point away from the diamond (see 46 CFR 45.35). Vessels that operate on the salt water of the St. Lawrence River must also have salt water lines that point toward the diamond (see 46 CFR 45.37). Vessels marked with ocean load lines, when engaged on a voyage on the Great Lakes, may load to their seasonal marks in accordance with the schedule in 46 CFR 45.9. There are no provisions for fresh water variation (fresh water allowance) on the Great Lakes and the St. Lawrence River from Lake Ontario to Montreal. (Vessels authorized limited "fair weather" voyages on the Great Lakes are normally assigned a diamond unless they have been authorized the Carrabelle to St. Marks route, in which case they will be marked with the Coastwise disk.)

c. For Vessels On Special Service Voyages. Load line marks for Special Service voyages are indicated by a disk with a horizontal line and seasonal marks as per 46 CFR 44.05-35. Marks applicable to vessels engaged in special service voyages on the ocean and on the Great Lakes are indicated by a combined circle and diamond with a horizontal line. Load line marks applicable to vessels engaged on both Special Service and unlimited Coastwise or International voyages are indicated by a disk with a horizontal line. The load line and seasonal marks for both latter cases are explained and illustrated in 46 CFR 44.05-10 and 44.05-35(b) and (c).

d. Subdivision Load Lines. Subdivision load lines are marked on passenger vessels that require them as described in 46 CFR 46.15-10.

6. Assignment Of Multiple Load Lines. An example of a request for multiple load lines would be a barge for which both unmanned ocean and manned ocean freeboards are desired. However, the presence of multiple, visible marks applicable to the same geographic voyage would nullify the main intent of load line marking. Both assignments may be calculated and marked (with weld beading) on the vessel. However, if a barge is sailing in the unmanned mode, the manned freeboard marks muse be painted out and only the certificate applicable to the unmanned operation and vice versa may be aboard.

6.F.7. Description Of Load Line Certificates Issued Under U.S. Laws.

a. Load Line Certificate Forms. The forms of the various Load Line Certificates are specified in the resulatiorm as follows:

(1)	International	46 CFR42.50-5
(2)	International Exemption	46 CFR 42.50-B(e)
(3)	Form B	46 CFR42.50-10(b)
(4)	Coastwise	46 CFR 42.50-15
(5)	Special Service Coaswise or Inter-Island	46 CFR 44.05-35
(6)	Great Lakes	46 CFR 45, Appendix A
(7)	Subdivision Load Lines*	46 CFR 46.10-30

* Subdivision load lines are indicated by making specific entries on the appropriate load line certificate. There is no special form for subdivision load lines.

b. Load Line Certificate Data. The Load Line Certificate includes the following:

(1) Several terms constituting a description of the ship, such as name, official number, port of registry, length, type "A" or "B." whether "new" or "existing," and whether the freeboard, if type "B," is reduced (subdivision credit).

(2) Specification as to the vertical location of the load lines on the sides of the vessel and illustrations of the applicable load line marks.

(3) Specification of the voyages to which the load lines are authorized with restrictions as applicable.

(4) The period of time for which the certificate is valid including the dates of issuance and expiration.

(5) Date of initial or periodic survey.

(6) Evidence that annual load line inspections have been carried out. Regardless of the expiration date of the Load Line Certificate, load line inspections must be carried out by the assigning authority approximately every 12 months after the original survey (see 46 CFR 42.09-15(d)). These annual

6.F.7.b. (6) (cont'd) inspections are evidenced by endorsements on the reverse side of the Load Line Certificate. The certificate may be cancelled if the inspections are not made (see 46 CFR 42.07-55). If a vessel's Load Line Certificate is not endorsed to show that it has been surveyed annually, due to its operating in areas where a load line is not required, the load line assignment and certificate become invalid. The Load Line Certificate can be revalidated by the assigning authority's performing the annual survey. The endorsing official should sign and seal the line for the current year in the "Annual Survey" portion on the back of the certificate. One signature line should be left blank for each year in which no survey was made.

(7) A statement that the certificate is issued under the authority of the Commandant of the Coast Guard. ABS is the prime load line assigning and issuing authority for the U.S. Assigning authorities other than ABS obtain this authority through a separate letter for each specific vessel.

(8) On Special Service Load Line Certificates, the character of cargo and conditions of operation are also defined (see 46 CFR 44.01-11, 46.10-30, and 46.15-10).

(9) A statement referring to the applicable stability information.

(10) Endorsement of load line extension, if applicable (on reverse side of certificate).

8. Foreign Load Line Certificate. The format of the International Load Line Certificate is prescribed in 46 CFR 42.50-5. Certificates issued by assigning authorities for the countries acceding to the convention have the same information, in the same sequence, as is printed on the U.S. issued certificate. However, they are written in the languages of the issuing countries, and the dimensions are normally given in the metric system, rather than in feet and inches. To facilitate conversion of metric dimensions to feet and inches, the following figures should be used:

a. 1 meter = 39.37 inches

b. 1 decimeter = 3.94 inches

c. 1 centimeter = .39 inches

d. 1 millimeter = .039 inches

9. Form B Load Line Certificates. The only Load Line Certificates for foreign vessels that are recognized by the U.S. are those issued under the authority of an Administration that is party to the International Convention on Load Lines, 1966 (ICLL 66), unless a country is still within

6.F.9. (cont'd) the maximum 2-year grace period set forth in Article 16(4) regarding the 1930 Convention. [NOTE: Dates of entry into force are listed in Figure 6-21 above.] Article 16(4) states that any International Load Line Certificate (1930) that is current when the 1966 Convention comes into force for a vessel's flag state, shall remain valid for 2 years or until it expires, whichever is earlier. Article 17 of the 1966 Convention prohibits the issuance of a 1966 International Load Line Certificate to any vessel of a flag state that is not a contracting government to that Convention (see Figure 6-21). A vessel of a flag state that is not a contracting government to the 1966 Convention is subject to U.S. load line regulations when it is in U.S. waters. 46 CFR 42.09-20 states that foreign vessels of countries that are not a party to the 1966 Convention shall be subjected to survey, marking, and certification by a load line and assigning authority. Therefore, vessels of non-party countries must obtain Form B Certificates to operate in U.S. waters. 46 CFR 42.13-5(a) states that the assigning and issuing authority shall satisfy itself that the general structural strength of the vessel is sufficient for the draft corresponding to the freeboard assigned. 46 CFR 42.13-5(b) states that vessels built and maintained in conformity with the requirements of a classification society recognized by the Commandant are considered to possess adequate strength. The Coast Guard considers that the structural standards of a classification society recognized by the Commandant satisfies the strength requirements for receiving a Form B Load Line Certificate. ABS, Lloyds Register of Shipping, Bureau Veritas, Germanischer Lloyd, and Det Norske Veritas are recognized societies. The stability is reviewed by the Commandant (G-MTH) to ensure that sufficient information is available to the Master so that the stability of the vessel can be calculated for all conditions of loading. This satisfies U.S. load line regulation requirements and has no bearing on vessel flag State requirements. If a Form B Load Line Certificate is desired, the owner or agent of the vessel should follow the procedures in NVIC 18-82.

10. Specific Requirements Of the Load Line Regulations.

a. Freeing Ports. Drainage must be provided from all sections of the weather decks. Particular attention should be paid to vessels with split forecastles or split deckhouses, which form three sides to a well and may have the fourth side formed by the stowage of deck cargo.

b. Sill Heights. 46 CFR 42.15-10(b) requires that the height of the sills of access openings in bulkheads at the ends of enclosed superstructures shall be at least 15 inches above the deck. A 1-inch reduction in sill height may, however, be permitted for each 1 foot of excess freeboard. In no case should the sill height be less than 6 inches.

c. Vent And Hatch Coaming Heights. Consideration will be given by Commandant (G-MTH) to permitting a reduction in the required vent and hatch coaming heights if the assigned freeboard is significantly

6.F.10. c. (cont'd) greater than the geometric freeboard that would normally be assigned to that vessel.

d. Bow Height. 46 CFR 42.20-70 requires vessels to have a minimum bow height at the forward perpendicular. NVIC 15-82 describes a procedure whereby calculations can be submitted to demonstrate an equivalency to the how height requirement in lieu of having a freeboard penalty imposed.

e. Watertight Doors. If bulkheads are required to be made watertight to comply with the damage stability requirements in the load line regulations, watertight doors in those bulkheads should meet the requirements in 46 CFR 170, Subpart H.

G. Hull Strength And Loading In Vessel Design.

1. Structural Plan Review.

a. Introduction. There are three similar but independent levels of structural review to which a vessel maybe subject:

(1) Coast Guard review for certification;

(2) Classification society review for class; and

(3) Review for load line assignment.

b. Coast Guard Review. Plan review is required for all certificated vessels. Review of small passenger vessels regulated under 46 CFR, Subchapter T(S) is usually performed locally by the OCMI; review of all other vessels is performed by the MSC. The technical standards used in structural plan review are, in most cases, the appropriate ABS Rules. In some cases, there may be Coast Guard structural requirements that exceed those of ABS. New concepts and unusual vessel designs for which there are no published structural standards are reviewed by Commandant (G-MTH).

c. Classification Society Review. The current CG/ABS Memorandum of Understanding (MOU) II, signed on 11 April 1990, controls ABS activities in plan approval and inspection of new vessel construction; NVIC 10-82 details Coast Guard acceptance of ABS plan review and inspection of vessels (see paragraph 5.D.2 above). If a vessel is classed by a classification society other than ABS, the provisions of NVIC 10-82 do not apply. As a minimum, the structural items listed below must be reviewed for compliance with ABS Rules, not the rules of the other society. Also, any structural items in high-stress areas or appearing to be marginally adequate must meet ABS requirements. Those items required to comply with ABS Rules are:

6.G.1.c. (1) Midship section modulus;

(2) Loading strength calculations;

(3) Deck and shell plating and framing;

(4) Center vertical keel;

(5) tank bulkheads and ordinary watertight bulkheads; and

(6) Inboard profile structural continuity.

d. Review For Load Line Assignment. Under 46 CFR 42.13-1 and 42.15-1, the freeboard assignment, structural design, and loading restrictions must maintain hull stresses within safe limits. ABS (or another classification society approved by the Commandant on a case-by-case basis) performs the load line assigning function on behalf of the Coast Guard (see 46 CFR 42.07-35). The structural items reviewed for load line are the major strength members, but not the many other structural components that are reviewed for certification or class.

2. Regulatory Structural Requirements.

a. Recognized Classification Societies. ABS Rules are referenced throughout title 46, CFR as the structural standards to which a vessel is to be built. Some regulations also make reference to a "recognized classification society." In addition to the broad acceptance of ABS Rules, the Coast Guard has reviewed the MODU structural standards of Det Norske Veritas (DNV) and Lloyd's "Rules For Building and Classing Yachts and Small Craft" and accepts application of these standards to MODU's and small craft respectively. Recognition of the specific standards of other classification societies, which are members of the International Association of Classification Societies (IACS), may be siren by Commandant (G-MTH) on a case-by-case basis for application to a specific vessel. [NOTE: Recognition of a classification society's standards is not delegation of functions which are to be performed by the Coast Guard. See chapter 5 of this volume regarding third party organizations to which certain CVS functions have been delegated.]

b. Requirements For Small Passenger Vessels. Structural requirements for "T-Boats" are established, essentially, at the discretion of the OCMI. The OCMI may approve a vessel design based on 5 years of satisfactory performance of a similar vessel (46 CFR 177.10-1), or may perform plan review using one or more of the following references. See chapter 5 of this volume for a list of ABS publications. The following additional references are useful:

(1) Lloyd's Rules and Regulations for Classification of Yachts and Small Craft; and

6.G.2.b. (2) Navigation and Vessel inspection Circular (NVIC) 11-81, Structural Plan Review for Aluminum Small Passenger Vessels.

Much technical literature is available on structural design of small vessels, including those made of aluminum and ferro-cement. Commandant (G-ENE-5) can recommend references for specific applications.

c. Requirements For Tank Barges. The only detailed structural requirements in title 46, CFR are for tank barges. 46 CFR 32.60, 32.80, and 151.10 reference ABS Rules for general structural standards and specify additional requirements for independent tank barges and barges subject to an assumed grounding condition. Since 1976, there have been several structural failures aboard tank barges involving certain designs. Calculations should be made to check the buckling strength of the decks and hull bottoms of transversely-framed barges over 200 feet long. The ABS Rules for Building and Classing Steel Vessels for Service on Rivers and Intracoastal Waterways (1980) provides guidance on buckling strengths of river barges.

d. Loading Information For Tank Vessels. All tank vessels over 300 feet in length and certificated under 46 CFR, Subchapter D must have approved loading information aboard (see 46 CFR 31.10-32). Similarly, unmanned tank barges over 300 feet in length that carry certain dangerous cargoes, certificated under Subchapter I, must have approved loading information (see 46 CFR 151.01-10(c)(1)). This information must be written in a form that will enable an operator to determine stress and stability for any loading condition. Loading computers or calculators may not substitute for written loading information, although they may supplement it.

3. Vessel Structural Policy. The guidance below presents policy decisions that have been made in particular cases where the intent of the regulations is not clear or where more than one regulation may seem to apply.

a. Offshore Supply Vessels (OSV's). OSV's are sometimes allowed to carry high density drilling fluids in certain tanks. The structure of these tanks should be reviewed according to ABS Rules, and the specific gravity of these fluids used in determining the head needed in the structural review.

b. Small Passenger Vessels. There are a variety of review standards which may be used for T-Boats, depending upon length and material of construction. The MSC may be consulted for guidance. Where a T-Boat is arranged in such a fashion as to allow passengers on decks above the main deck, these decks must withstand a passenger load of 100 pounds per square foot at a stress not exceeding 0.5 times the yield stress. The structure must be adequately braced to resist lateral components of loading that might arise due to vessel motions.

6.G.3. c. Reinforcement Of Hull Openings By Doubler Plates. In limited locations, as defined in NVIC 7-68, doubler plates may be used in lieu of inserts to reinforce hull openings. ~ere these are permitted, the following requirements must be met:

(1) The thickness of the doubler may not exceed the thickness of the plate to which it is attached.

(2) The cross-sectional area of the doubler must be at least as large as the cross-sectional area of the plating removed to form the opening.

(3) The doubler must be continuous along the length of the opening in the direction of the principal stress.

(4) In areas of compressive or low-tensile stress, the doubler plate may be omitted for half of the opening width, centered on the opening, in the direction perpendicular to the principal stress.

(5) Doublers may not be used for openings larger than 10 feet or 40 percent of the width of the vessel, whichever is less.

(6) Doublers should not be used in way of tanks containing flammable or combustible liquids in bulk.

4. Stress Monitoring And Hull Response. The evolution of naval architecture has embraced the basic premise of "prudent seamanship." Traditionally, sailors have developed through experience a "feel for the sea." The advent of all-welded construction and the larger size of many modern ships tend to mask many of the traditional sensory signals. Fortunately, the technology which yielded the data needed to design the new generation of ships, i.e., statistics, instrumentation, and computers, also offers the means to restore a measure of "feel for the sea" to the modern sailor. Sensory instruments such as accelerometers and gyroscopes can provide an electrical signal to provide measurements of any of the 6 degrees of motion freedom. The computations that are necessary to express the results in a manner understandable to a ship's master can be performed by small, relatively inexpensive computers. For the present, the information produced by these instruments should be treated with healthy skepticism. Introduction of such technology will not eliminate casualties. However, if it is properly used as an advisory system, damage may be avoided or lessened. [NOTE: See the "Status Report on the Application of Stress and Motion Monitoring in Merchant Vessels," by Chazal, Cojeen, Lindemann, and Maclean, 1980 SNAME STAR Symposium.]

5. Structural Reliability.

a. Reliabillty Concept. The traditional approach to structural design SAFETY has been to select a design load and relate it to stress, by means of a SAFETY factor that was expected to define the strength of

6.G.5. a. (cont'd) the structure relative to a particular mode of failure. Since the loads experienced by vessels are statistical in nature, techniques can be used to determine the likelihood that a load will exceed a specified value. The strength of a vessel is also statistical, since there is variation in the strength of individual structural components, the presence of cracks and flaws, wastage, and the modes of failure themselves. "Reliability" is the probability of no failure, or the ability of strength to exceed load. This analysis generally includes calculating confidence limits associated with reliability.

b. Applications to Vessel Structure. Reliability analysis has been used in engineering for several years, notably in electronics and mechanical systems. Structural reliability has been applied in civil engineering to extreme events such as earthquakes and floods. The same techniques may be applicable to vessel structures, but no definitive reference has been published on this subject. One of the major applications of reliability analysis to vessel structures will be classification society rules and standards. Computer analysis of seaway loading, structural response, and ocean wave data has enabled designers and classification societies to predict vessel loads and response to a high degree of precision. The trend over the past decade has been to decrease scantlings, as more confidence is gained in predicting ship response to lifetime loads. Rules may continue to appear as simple formulas, but the basis for these rules will be more firmly rooted in reliability analysis.

H. General Methods Of Fabrication.

1. Introduction. This section of the manual addresses various methods used in joining steel members to erect the ship structure. Fabrication methods used in connection with power boilers, nuclear vessels, heating boilers, pressure vessels, and piping are discussed in chapter 3 of this volume. Welding, riveting, and joining with tensile fasteners are common means of fabricating ships. Since welding is now the most common method of fabrication, the emphasis herein is on welding processes. Some brief remarks concerning riveting are included, as this method of repair may still be encountered in older ships. Likewise, some brief remarks concerning the use of tensile fasteners in the repair of riveted ships and in special applications on modern ships are included.

2. Welding Procedures.

a. Regulatory Authority. The provisions of 46 CFR 32.60-1 and 92.01-10 address hull structural standards and state that compliance with the standards established by ABS will be considered evidence of the structural efficiency of a vessel. Exception is made for special cases in which structural requirements must be determined by detailed analysis of the entire structure or some part of it by the Coast Guard.

6.H.2. b. ABS/Coast Guard Requirements. The ABS Rules for Building and Classing Steel Vessels, Section 30, Parts I and III, contain the requirements for the production of acceptable hull welds, the visual inspection of hull welds, and the qualification of hull welders. Merchant Marine technical Note 4-68 contains general guidance concerning Coast Guard requirements when high-strength steels are used for hull construction. Additional hull welding requirements for vessels carry ing bulk liquefied gases are contained in 46 CFR 154, Subpart C. Other advisory documents contain guidance and information concerning hull welding (see subparagraph 6.H.2.d below). The majority of hull welds inspected by the Coast Guard are fillet welds, located throughout the structure. These welds are normally subjected to a visual inspection only. Proper shape and size fillets, lack of undercut at the toes, and freedom from craters at the ends are the visual criteria used to check the weld, the objective being to detect conditions quickly with a minimum of expense.

c. Welding Filler Metals.

(1) General. Since 1968, electrodes by the Coast Guard have been listed in the ABS publication Approved Welding Electrodes, Wire-Flux, and Wire-Gas Combinations. The ABS Rules also provide for the approval of electrodes that pass the approval tests described in Appendix A of "Approved Welding Electrodes," or that comply with the provisions of other agencies, such as the American Welding Society (AWS). The OCMI may approve electrodes not approved by ABS provided the fabricator passes an appropriate weld procedure qualification test. Such approvals extend only to the specific fabrication to which they are granted. The procedure for, the OCMI's approval of electrodes is detailed in 46 CFR 57.02-4. A similar procedure for hull welding electrodes can be inferred from 46 CFR 31.10-1 and 92.01-10, which provide for compliance with ABS standards as evidence of the structural efficiency of a vessel.

(2) Coast Guard Review Of Electrodes. Notwithstanding general provisions for approval of an electrode, final approval depends upon the specific application of the electrode. Accordingly, the OCMI may require procedure tests to determine the capability of the shipyard or fabricator to apply a proposed electrode to the base material. The Coast Guard's experience with E-7024 electrodes illustrates this point. There is an understandable economic motivation on the part of fabricators to extend the use of this high deposition-rate rod beyond the limited applications for which it was originally designed and approved. Often, testing results are cited to show that the quality of this rod is sufficient for extended application under ideal welding conditions. However, the Commandant's position is that the

6.H.2. c. (2) (cont'd) fabricator must demonstrate the level of quality necessary for successful use, to gain approval to use E-7024 electrode in applications not previously approved or proven.

[NOTE: Electrodes should be kept dry while in storage. Controlling the moisture exposure of low-hydrogen electrodes is especially important, and manufacturers' suggested procedures should be followed strictly. See Ship Structure Committee Report 262, "Preventing Delayed Cracks in Ship Welds," for specific guidance on the use of low hydrogen electrodes.]

d. Welding Guidelines.

(1) Introduction. As noted above, the ABS Rules for Building and Classing Steel Vessels is the benchmark for mild steel hull welding required by Coast Guard regulations. There are, however, many other helpful documents that illuminate the requirements laid down in the ABS Rules and provide detailed discussions of particularly troublesome areas. Some, such as the AVS Guide for Steel Hull Welding, provide general "handbook" information on all aspects of hull welding. Others, such as the Ship Structure Committee Reports, provide indepth analysis of a particular welding problem (see subparagraph 6.H.2.e below). Although it is beyond the scope of this manual to detail guidelines for hull welding, some areas merit special attention and are highlighted below.

(2) Pre-Weld Considerations. Proper alignment and fit-up are extremely important for an acceptable structure. The AVS Guide contains a good discussion of erection and fitting concerns. Excessive root gap and excessive deformation of any member to obtain alignment should not be permitted. The Guide offers guidance on acceptable buildup (buttering) techniques and the use of backing strips to correct excessive root openings and poor fit-up. Prior to welding, all aspects of the weldment should be checked for adherence to approved plans. These checks should include joint detail, welding electrode, preheat requirements (if any), and welding machine settings. Particular attention should be paid to the requirements for edge preparation and cleanliness listed in Section 30, Part I of the ABS Rules for Building and Classing Steel Vessels.

(3) Repair Welds. When repair welds are necessary, special attention should be paid to ensure that a proper electrode, preheat (if required), and an appropriate weld procedure are used; a repair weld can prove more detrimental than the defect it sought to correct because of improper repair weld procedures.

6.H.2.d. (4) General Welding Activities. The welding sequence is an important consideration for minimizing distortion and avoiding cracking of boundary welds. Two basic "guidelines" apply:

(a) Tie in plates that are relatively free to draw together; and

(b) Do not weld across an unwelded butt or seam.

The AWS Guide contains examples of good welding sequence that result from the application of these "guidelines."

(5) Preheating. Preheat is usually used when welding higher strength steels, heavy weldments and casting, or metals subject to high restraint, and when welding under high humidity or low temperature (below 32F) conditions. The primary benefit of preheating is the reduction of the cooling rate during welding. The slower cooling rate helps to reduce the concentration of shrinkage stresses, and may therefore help prevent the formation of cracks. A proposed welding procedure should always be reviewed to see if preheat is necessary prior to approval. The preheat temperature should be measured on the welding surface from a distance of about three inches. If preheating is accomplished by torch, the base metal should be preheated with sufficient time for complete thermal penetration through all parts to be welded. [NOTE: Under some circumstances (such as the welding of an insert in a heavy plate), too much preheat may actually increase the tendency to shrinkage cracking by adding shrinkage to the weld shrinkage. The AWS Guide contains additional information on preheating.] Many of the guidelines for mild steel hull welding apply to aluminum hull welding. For specific guidance in this regard, refer to the publications concerning aluminum listed below:

e. Additional References.

(1) ABS Rules for Building and Classing Steel Vessels (1983);

(2) ABS Rules for Nondestructive inspection of Hull Welds (1975);

(3) ABS Rules for Building and Classing Aluminum Vessels (1975);

(4) American Welding Society (AWS) Publication D3.5-76, Guide for Steel Hull Welding (1975);

(5) AWS Aluminum Hull Welding Manual (to be developed);

(6) Aluminum Company of America (ALCOA), Considerations for the Structural Detailing of Aluminum Ships, Final Report (1974); and

6.H.2.e. (7) Ship Structure Committee (SSC) Report #245, A Guide for Interpretation of Nondestructive tests of Ordinary, Medium, and High-Strength Low Alloy Steel Butt joint Weldments in Ship Hull Structures (1977);

(8) SSC Report #253/254, A Guide for the Nondestructive testing of Non-Butt Welds in Commercial Ships (1976);

(9) SSC Report #261/262, Preventing Delayed Cracks in Ship Welds (1976);

(10) SSC Report #293, Underwater Nondestructive testing of Ship Hull Welds (1979);

(11) Guide to Sound Ship Structures, Sections IV and V, Amelio M. D'Archangelo (1964);

(12) USCG Navigation and Vessel inspection Circular (NVIC) 7-68, "Notes on inspection and Repair of Steel Hulls" (1968);

(13) USCG NVIC 11-80, "Structural Plan Review Guidelines for Aluminum Small Passenger Vessels" (1980);

(14) USCG Merchant Marine technical Note 4-68, "Use of High-Strength Steels in Structural Applications" (1968).

3. Riveting Procedures.

a. Introduction. Welding has largely replaced riveting in ship fabrication. Some older ships with riveted construction may still be encountered, however. As with hull welding, compliance with ABS standards is considered satisfactory evidence of the structural efficiency of a vessel. In view of the decline in numbers of riveted hulls still in service, ABS has not published rules for riveting in recent editions of its Rules for Building and Classing Steel Vessels; reference must be made to Chapter 25 of the 1969 Rules. The guidance below supplements the ABS requirements.

b. General Repair Guidelines. The renewal of deck and shell plating is best accomplished, from an overall structural viewpoint, by replacement in kind (i.e., riveted replacement in riveted hulls to avoid hard spots or points of high stress concentration in an otherwise less restrained hull structure). However, riveting is becoming increasingly difficult and costly. Hence, it becomes necessary to make welded repairs to riveted ships. Extensive experience and tests indicate that the steel in existing riveted ships may be more sensitive to brittle fracture initiation and propagation, when welded, than are vessels built with steel supplied under current ABS standards. The use of welding in the repair or alteration of existing riveted hulls therefore shall be limited as follows:

6.H.3.b. (1) Shell and deck seams involving existing plating thicker than 1/2-inch should ordinarily not be welded;

(2) Flush butts between new and existing strakes of shell and deck may be welded. Such welds must have full penetration;

(3) Lapped butts involving the use of fillet welds should not be used. Welded lapped seams may be used where plating is 1/2 inch or less in thickness;

(4) For greater thicknesses, replacements should be shaped as the original or the design should be changed so that butt welds can be employed. A typical method of doing this with in-and-out plating is shown in Figure 6-24; or

(5) Replacement of plates having joggled lapped seams or butts should be made, whenever possible, with flush seams and butts. A typical method is also shown in Figure 6-25.

c. Hole Preparation. Where riveting is necessary and rivet holes are punched, the holes should be reamed in order to remove the excessively cold-worked material, which can be a source of crack initiation. The holes should be reamed between 1/16-inch and 1/4-inch, depending on the thickness of plate and the diameter of the hole; in most cases, a ream of 1/8-inch will be suitable.

d. Deteriorated Or Missing Rivets. The replacement of deteriorated or missing rivets that were marginally sized in original construction with undersize bolts is not acceptable. However, upon approval of the OCMI, bolts may be used for emergency purposes if oversized and closely fitted into oversized, reamed holes. Often, the ringing of rivets by means of welding is proposed as a repair measure for leaking or otherwise defective rivets. However, rivets that do not completely fill, and are not firm and tight in, their holes fail to carry their share of the load; ringing with welding does not improve the situation. Accordingly, any ringing of rivets by welding must be regarded as a temporary measure; it is acceptable only where not more than a few scattered frame or seam rivets are involved. Ringing of rivets by welding should not be permitted in way of lapped or strapped butts, or for any riveting of deck plating outboard of the hatches. The use of welding in building-up the deteriorated points of otherwise sound rivets is permissible, provided the corroded metal can be and is removed prior to the time that the building-up is done.

4. Tensile Fasteners.

a. Introduction. Hot-driven rivets are no longer used as a method of connecting vessel structural components. Yet, even in welded ships, there are locations where riveted connections (or their equivalent) are necessary or desirable. There is also some repair work on existing riveted structures that requires riveted-type connections.

INSERT OF A WELDED PLATE IN A RIVETED HULL

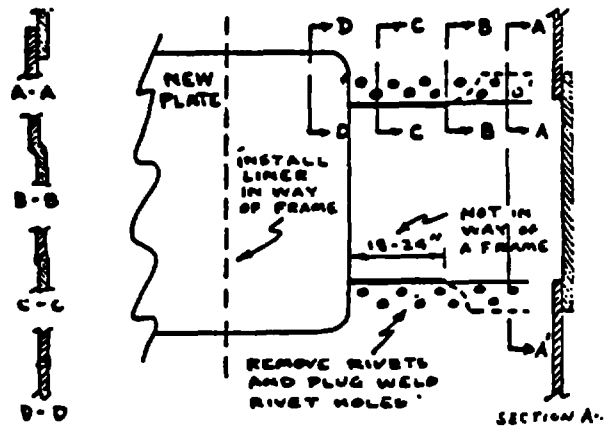

FIGURE 6-25

INSERT OF A BUTT WELDED PLATE IN A LAPPED HULL

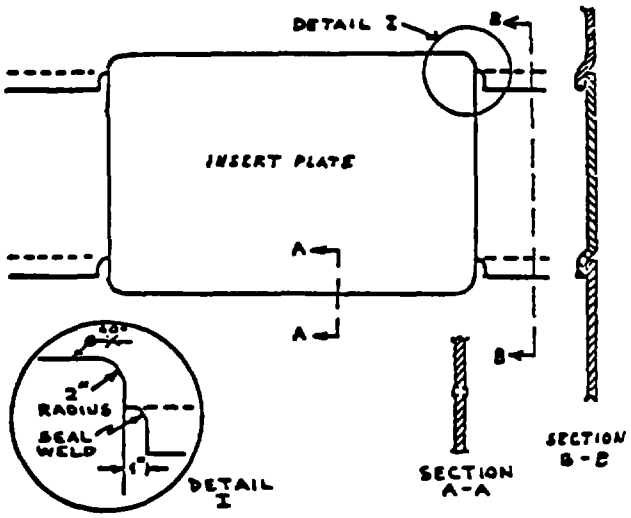

6.H.4. a. (cont'd) As skilled riveters are increasingly scarce, designers and shipbuilders have turned to tensile fasteners as easy-to-install connecting devices that are cost competitive with the rivet. These fasteners are not merely "rivet substitutes"; each type of fastener has its own advantages and disadvantages. Each has special installation techniques and precautions that must be observed for satisfactory results. In simplest terms, a tensile fastener is a device that pulls structural components together by tension or "stretch" in the fastener; the bolt and the lockpin are two examples. The amount of tension can be closely controlled with these fasteners and thus a predetermined "clamping force" in the joint can be attained. The hot-driven rivet, on the other hand, is not a true tensile fastener because it cannot pull work together; the structural components must be held closely before they are riveted. As the rivet cools, it does shrink, clamping the joint; in this narrow sense only, the rivet is similar to a true tensile fastener. [NOTE: Certain types of tensile fasteners have been accepted as a substitute for hull structural rivets. Unless tensile fasteners are specified on an approved plan, they should not be used in repair applications without approval of the MSC or Commandant (C-MTH).]

b. Swage Locking Pins And Collars (Lockpins). Lockpins consist of a headed, tapered, smooth-shanked, circumferentially-grooved pin, secured by a collar swaged into the grooves of the pin; they are often referred to by the commercial name "Huckbolts." During installation, the pin is stretched in tension by a special pulling tool. While the pin is held in tension, the collar is swaged tight against the work. When tension is released, usually by means of a "breakaway stud," the head of the pin and the collar are pulled tight against the work by the tension in the pin. Lockpins and collars are available in aluminum alloy, corrosion-resistant steel, carbon steel, and alloy steel. Military Specification HIL-P23469B SHIPS (Pins and Collars, Swage-Locking (lockpins)) contains a complete description of these devices. Ship Structure Committee Report #260, "A Survey of Fastening techniques For Shipbuilding," also discusses them. Lockpins have been used with satisfactory results in nontight, watertight, and oiltight applications above and below the waterline. However, they are not authorized for use in main longitudinal strength joints, such as hull plating butts. Approval for particular applications of lockpins is considered on an individual basis by both ABS and the Coast Guard.

c. Structural Bolting. The common smooth-shanked bolt has not proven satisfactory in locations where high joint stability is required. Its joints are subject to slip when highly stressed, and water- and oiltightness is difficult to attain. Ribbed, shanked " body bound" bolts have also proven unsatisfactory. Installation tolerances are severe and the bolt ribs tend to peel and pack under the head. Also, because of the high forces needed in installation, the bolt threads are easily stripped. The high-strength bearing bolt, however, has

6.H.4. c. (cont'd) given satisfactory results. This fastener is a knurled shank, "body bound" bolt designed so that there is a relief behind each knurl that prevents "packing" of material that is displaced when the bolt is installed. The knurls usually form a spiral pattern which "threads" the hole, thus reducing installation resistance. Because of the knurled shank, torquing is required only from the nut end. This fastener fills the hole, is not subject to slippage and has good strength. The knurled shank, however, grooves the hole as the fastener is pulled tight. This process may lead to cracking when the material fastened has a high nil-ductility transition temperature. The steel in some older vessels has a transition temperature in excess of normally encountered ambient temperatures. The high-strength bearing bolt has been accepted for use in structural applications, other than shell plating below the waterline and main longitudinal strength connections such as hull plating butts, provided that the material fastened has acceptable ductility properties. Approval for particular applications of the high-strength bearing bolt is likewise considered on an individual basis by both the ABS and the Coast Guard.

d. Design Criteria For New Construction Or Conversion. The following factors should be considered when evaluating the use of lockpins or high-strength bearing bolts for a particular application:

(1) The fastener chosen should be one with which a significant amount of marine experience has been obtained, or for which the designer should be prepared to furnish test results or other technical and service data to establish its suitability. Coast Guard acceptance of the type fastener for the application intended should be obtained early in the design process.

(2) The specific fastener chosen should be suitable for the service intended. There are a wide variety of lockpins made of various materials, not all of which are suitable for use in all applications.

(3) In general, the fastener size, edge distance, spacing, etc., should be the same as for a riveted joint in the same application (see Section 25 of the 1969 ABS Rules for Building and Classing Steel Vessels). In some instances, a reduction in fastener diameter has been accepted on the basis of service data and test results of the particular fastener involved.

(4) In general, hole size and countersink requirements should be to manufacturers' recommended tolerances. For lockpins in water-and oiltight applications, a light-drive fit is preferable. A maximum hole clearance of 1/64-inch on the diameter is acceptable in most applications, and 1/32-inch has been accepted in lightly loaded structures not requiring tightness.

6.H.4.d. (5) Plans of the joint are required, including the details of the connection, the manufacturer and designation of the fastener, the manufacturer's markings appearing on the fastener and supplementary pieces such as nuts or collars, and the hole clearance and countersink requirements. The intent here is to provide an installation plan in enough detail to ensure that the joint is properly designed and can be properly made using fastening components that are readily identifiable to the inspector.

(6) In the case of fasteners having knurled or similar shanks that "cold work" the material fastened during installation, data should be provided to indicate that the material has satisfactory ductility properties. In the case of hull steel, compliance with Section 43 of the ABS Rules Is adequate.

e. Criteria For Use In Repairs. Tensile fasteners may be used as replacements for deteriorated rivets in an existing joint where the fasteners would be acceptable in new construction, on the following bases:

(1) Where they are used to replace "isolated" deteriorated rivets, plans normally are not required unless the OCMI determines that they are necessary. However, if the repair is extensive, plans are required as noted in subparagraph 6.H.4.d.(5) above.

(2) The size, edge distance, spacing, etc., should be the same as for the rivets replaced. Other proposals should be submitted for technical review.

(3) Special attention should be given to the clearance and countersink requirements, which should adhere closely to those for new construction.

(4) The existing joint must be sound, to ensure that the high clamping force of the fasteners does not "start" the remaining rivets in the joint.

f. Tightness. Caulking, seal welding, or other means of "correcting" poorly set fasteners are not acceptable. If the fastener is not properly installed, it should be replaced. Care should be taken to avoid damaging the base material during this operation. Caulking and seal welding are likewise unacceptable as means of obtaining oil- or watertightness around fasteners or their associated collars or nuts.

I. Hull Fittings And Closures.

1. Single-Dogged Hatches And Scuttles. Several designs of hatches and scuttles have only a single dog or bolt for securing. Some are mounted flush with the deck, while others are mounted on coamings. A survey of inspectors has indicated a variety of opinions on these fittings. There have been some requests to use these fittings for Butterworth openings.

6.I.1. (cont'd) Variables in determining whether these fittings are gastight include the diameter and reinforcement of the opening, the strength of the hatch, the location of the dog, and the location and type of gasket and knife edge. In general, these fittings have not been used on cargo tanks. There has been no provision for type-approval of hatches to be used on inspected vessels. Normally, they are approved for each vessel on a case-by-case basis, depending on their suitability for the intended location and use. Often, hatches are not shown on submitted drawings, and their acceptance is left to the discretion of the inspector. Varying judgments on these fittings have created a lack of uniformity. These fittings should be accepted as being watertight and, therefore, may be used in compartments such as voids and ballast tanks in any type of vessel or service, subject to the approval of the OCMI. However, these fittings are difficult to maintain gastight, and shall not be used in cargo or fuel tanks where lack of a gastight seal possess a serious hazard. Three-dogged circular fittings and four-dogged oblong fittings are acceptable, and appear to be the most "sailor-proof" for this service.

2. Watertight Doors Below the Bulkhead Deck Aboard T-Boats.

a. General Provisions. 46 CFR, Subchapter T does not specifically address the subject of watertight doors in subdivision bulkheads aboard small passenger vessels. The regulations require watertight bulkheads to extend intact to the bulkhead deck, and specify the number of penetrations in these bulkheads be reduced to a minimum. They also require such penetrations to be kept as high and as far inboard as practicable, and that the vessels are provided with the means to make such penetrations watertight (see 46 CFR 178.25-1). The intent of these requirements is to restrict the use of watertight doors in watertight bulkheads in most circumstances. A limited number of hinged watertight doors are permitted at specific levels below the bulkhead deck in large passenger vessels (regulated under 46 CFR, Subchapter H). The rationale is that in the event of damage, there should be sufficient time for a crew member to evacuate a flooding space and close its watertight door before flooding prevents the door from being closed. This philosophy is not readily applicable to T-Boats, because it is anticipated that flooding of such a vessel will submerge the sill of a below-decks watertight door much faster than would be expected in a larger vessel. Also, this type of craft typically has a smaller number of crewmembers to ensure that below-decks watertight doors have been closed.

b. Provisions For Crew Boats. There are differences in the philosophies governing the regulation of T-Boats and combination cargo/passenger vessels used in the offshore oil and mineral industry. The Commandant has recognized that requirements for vertical access to after spaces in crew boats (e.g., for delivery of workpersons and gear to drilling platforms) which may carry small amounts of deck cargo on an open stern, may be impractical or present a greater hazard to crewmembers, by forcing them onto the weather deck for access to the engineroom or

6.I.2. b. (cont'd) after compartments. In general, Class 1 quick-acting watertight doors may be installed in subdivision bulkheads of offshore crewboats when it is demonstrated that vertical access is impracticable and that watertight doors are necessary for SAFETY. Such installations will be considered on a case-by-case basis by the MSC, under the following criteria:

(1) Each door must be a Class 1 quick-acting watertight door, designed and tested in accordance with 46 CFR 73.35-30 or an equivalent standard. "Quick-acting" means that the door is equipped with a handwheel or lever which operates all dogs simultaneously.

(2) Each Class 1 door must be equipped with a device indicating to the vessel's operators when the door is opened.

(3) Each Class 1 door must be marked "RE-CLOSE AFTER USE," in accordance with 46 CFR 78.47-37.

(4) An endorsement must be placed in the vessel's stability letter or COI requiring the master to ensure that the door is closed at all times except when used for transit.

3. Aluminum Hatch Covers. Since 1965, use of aluminum hatch covers (except those of unusual size or application) was allowed. This permission was granted on the basis of SAFETY benefits derived from their lighter weight and greater ease of handling. However, in a recent tank vessel casualty, the heat from a cargo fire caused the melting of aluminum hatch covers, permitting the fire to spread to cargo tanks not initially involved. Further fire tests confirmed the observations made from the casualty. Based upon this experience, aluminum hatch covers shall NOT be used aboard new vessels carry ing oil or other flammable or combustible liquids in bulk, unless they are used for dedicated wing ballast tanks and rake voids on tank barges.

4. Air Ports And Port Lights. Regulations concerning vessel openings, hatches, and closing appliances are found throughout the various subchapters of title 46, CFR. A representative listing of these regulations follows:

a.	31.25-1	Load lines required - TB/OCL
b.	32 56-21	Openings in exterior boundaries
c.	32 56-25	Category A machinery spaces: windows and port lights
d.	42.15-10	Doors
e.	42.15-25, -30	Hatches/hatchways
f.	42.15-35	Machinery space openings

6.I.4.	g.	42.15-40	Miscellaneous openings
	h.	42.15-45	Ventilators
	i.	62.15-50	Air pipes
	J.	42.15-55	Cargo ports
	k.	42.15-60	Scuppers, inlets, and scuppers
	1.	42.15-65	Side scuttles
	m.	42.15-70	Freeing ports
	n.	72.01-5	Vessel subject to load lines
	o.	72.05-30	Windows and airports
	p.	73.40-5	Port lights
	q.	73.40-15	Side ports
	r.	73.45-10	Side openings
	s.	78.15-1	Doors closed at sea
	t.	78.17-5	Closing appliances
	u.	78.17-35	Hatches and other openings
	v.	92.01-5	Vessels subject to load lines
	w.	97.15-20	Hatches and other openings
	x.	107.231	Inspection for certification (load lines)
	y.	108.114	Appliances for watertight and weathertight integrity
	z.	109.209	Appliances for watertight integrity
	aa.	168.05-5	Application of passenger vessel regulations
	ab.	175.07-1	Load lines required
	ac.	190.01-5	Vessels subject to load lines
	ad.	191.10-25	Watertight bulkhead doors
	ae.	191.10-30	Openings in vessel sides
	af.	191.10-35	Watertight integrity above the margin line
	ag.	33 CFR 143.301	Load line requirements

6.I.5. Fittings For Cargo Areas. Under 46 CFR 42.15-20(c) and the International Convention on Load Lines, 1966, cargo hatch covers must be weathertight. The ABS Rules for Building and Classing Steel Vessels establishes standards for determining weathertightness (Section 18.9.3). Testing of gasketless hatch covers has shown them to be weathertight when new; however, the Commandant is concerned with their ability to remain so in normal service. The Coast Guard will approve the use of gasketless hatch covers for cargo areas under the experimental installation provision of 46 CFR 42.03-25, subject to compliance with other requirements and approval by the OCMI.

J. Maneuverability In Vessel Design.

1. IMO Guidance Documents. Lacking a rational criteria for maneuvering performance, IMO has focused on providing masters and pilots with traditional maneuvering information usually obtained during vessel trials. The Design and Equipment Subcommittee (DE) of the Maritime SAFETY Committee (MSC) of IMO originally published resolution A.209(VII) in 1971 to provide information for the master. Over a decade later, IMO DE developed two additional Guidance documents: In 1987, Resolution A.601(15), "Provision and Display of Maneuvering Information on Board Ships," revised the information for the master; and MSC/Circ.389, "Interim Guidelines for Estimating Maneuvering Performance in Ship Design." The latter is an interim document that provides general guidelines, while much work remains to be done towards establishing rational maneuvering criteria. These IMO documents are presented in NVIC 1-89 titled "Maneuvering Information." Resolution A.601(15) addresses the provision of maneuvering information through Wheelhouse Posters, Pilot Cards, and Maneuvering Booklets. MSC/Circ.389 urges that maneuverability be considered during design, identifies a set of standard maneuvers during trials and encourages the development of different estimating techniques to supplement trial data. Design methods are not discussed in MSC/Circ. 389.

2. USCG Requirements. The Code of Federal Regulations (46 CFR 35.20, 78.21, 97.19, 196.19, and 33 CFR 164.35(g)) contains requirements for posting ship maneuvering information such as turning circles, stopping distances, and vessel speed versus shaft rpm relationship. The master of a vessel is required by 33 CFR 164.11(k) to ensure that the pilot is informed of the draft and other maneuvering characteristics that affect the safe navigation of the vessel.

MARINE SAFETY MANUAL

CHAPTER 7. THE TONNAGE MEASUREMENT PROGRAM

CONTENTS

SECTION		PAGE
7.A.	Introduction	7-1
7.B.	Authority	7-1
7.B.1.	Statutes	7-1
7.B.2.	Treaties	7-2
7.B.3.	Regulations	7-2
7.B.4.	Additional Sources	7-2
7.C.	Basic Admeasurement Policy	7-2
7.C.1.	Restrictions Of Activities	7-2
7.C.2.	Appeals And Reviews Of tonnage Measurement Decisions	7-2
7.C.2.a.	By the Coast Guard	7-2
7.C.2.b.	By Authorized Agents	7-3
7.C.2.c.	Reviews	7-3
7.C.3.	Program Activities	7-3
7.C.3.a.	At the Headquarters Level	7-3
7.C.3.b.	Field Operations	7-4
7.C.4.	Public And Military Vessels	7-5
7.C.4.a.	General	7-5
7.C.4.b.	Canal Measurements	7-5
7.C.5.	U.S. Built Vessels For Foreign Owners	7-5
7.C.6.	Measurement Charges	7-6
7.C.7.	Admeasurement Forms	7-6
7.C.8.	Admeasurement Reports	7-6
7.D.	The History Of Admeasurement	7-7
7.D.I.	Origins In the Middle Ages	7-7
7.D.2.	The Builder's Old Measurement Rule	7-7
7.D.3.	The Moorsom System	7-7
7.D.4.	The International Measurement System	7-7
7.E.	Tonnage Measurement Systems	7-8
7.E.I.	Introduction	7-8
7.E.2.	Prohibition Of Combined Systems	7-8
7.E.3.	Applying For tonnage Measurement	7-8
7.E.4.	The Format Of Applications	7-8
7.E.4.a.	Standard U.S. System Of Measurement	7-8
7.E.4.b.	Optional Dual-tonnage Method Of Measurement	7-9
7.E.4.c.	International Convention For tonnage Measurement Of Ships, 1969 (the tonnage Convention Measurement Method)	7-10
7.E.4.d.	Optional Simplified Measurement Method For Pleasure Vessels	7-10
7.E.4.e.	Optional Simplified Measurement Method For Small Commercial Vessels	7-11
7.E.4.f.	Panama Canal Or Suez Canal Measurement Methods	7-12

CONTENTS

SECTION		PAGE
7.E.4.g.	Foreign Measurement	7-12
7.E.5.	Applications For Water-Ballast Exemptions (46 CFR 69.03-63(g))	7-12
7.F.	The Standard U.S. System Of Measurement	7-12
7.F.1.	Introduction	7-12
7.F.2.	Tonnage Calculation	7-12
7.F.3.	Measurement Procedures	7-13
7.F.4.	Space Exemptions	7-13
7.F.5.	Space Deductions	7-14
7.F.6.	Regulatory Provisions	7-14
7.F.6.a.	Department Of Commerce (Commissioner Of Navigation)	7-14
7.F.6.b.	Department Of The Treasury (U.S. Customs Service)	7-14
7.F.6.c.	Department Of Transportation (U.S. Coast Guard)	7-15
7.F.7.	Adjustments And Corrections Of Tonnages (46 CFR 69.05-9)	7-15
7.G.	The Optional Dual-Tonnage Method Of Measurement	7-15
7.G.1.	Background	7-15
7.G.2.	Regulatory Provisions	7-15
7.H.	The International Convention On Tonnage Measurement Of Ships, 1969	7-16
7.H.1.	Introduction	7-16
7.H.2.	Issuance Of IMO Tonnage Certificates	7-16
7.H.3.	U.S. Regulatory Provisions	7-16
7.H.3.a.	General	7-16
7.H.3.b.	The Interim Tonnage Measurement Scheme	7-16
7.H.4.	Application	7-17
7.H.4.a.	General	7-17
7.H.4.b.	Non-Subject Vessels	7-17
7.H.4.c.	Requirements For IMO tonnage Certificates	7-17
7.H.4.c.(1)	New Vessels And Existing Vessels that Have Undergone Substantial Alterations Or Modifications On Or After 18 July 1982	7-17
7.H.4.c.(2)	All Other Existing Vessels	7-18
7.H.5.	Definitions Used In the I140 tonnage Convention	7-18
7.H.5.a.	"International Voyage"	7-18
7.H.S.b.	"New Vessel"	7-18
7.H.5.c.	"Existing Vessel"	7-18
7.H.5.d.	"Gross Tonnage"	7-18
7.H.5.e.	"Net Tonnage"	7-18
7.H.5.f.	"Great Lakes"	7-18
7.H.5.g.	"Length"	7-18

CONTENTS

SECTION		PAGE
7.I.	The Optional Simplified Measurement Method For Small Vessels	7-19
7.J.	Measurement For Transit Of the Panama Canal	7-19
7.J.1.	Introduction	7-19
7.J.2.	Computations Of Displacement tonnages	7-19
7.J.3.	Forwarding Of Panama Canal Certificates	7-19
7.K.	Measurement For Transit Of the Suez Canal	7-19

CHAPTER 7. THE TONNAGE MEASUREMENT PROGRAM

A. Introduction. Before a vessel may be assigned a gross and net tonnage, it must first be measured. This process is called "admeasurement." Tonnage measurements are taken for the purpose of determining the internal capacities of vessels; these volumes are translated into gross and net tonnages. Vessels that have undergone reconstruction or other internal changes that effect their existing tonnages are required to be remeasured. This process is called "readmeasurement." Tonnage is used by government and industry to gauge, among other things:

1. The applicability of Coast Guard regulations relating to licensing, manning, and inspection of vessels;

2. Drydocking, wharfage, mooring, and berthing costs;

3. Pilotage fees;

4. Tonnage taxes, international canal tolls, end port dues;

5. Tugboat rates;

6. Protection and indemnity insurance;

7. Lititgation of liability under U.S. law;

8. Wage scales based on power tonnage;

9. Load line assignment; and

10. The applicability of the International Radio Convention, the SAFETY of Life at Sea (SOLAS) Convention, and the Officer's Competency Certificates Convention.

Vessels may be measured at the request of the owner, the master or agent, a federal or state agency, or a foreign government. Public and naval vessels are measured for domestic and foreign applications and to facilitate their transits of the Panama and Suez Canals. At the discretion of the Commandant, a vessel not required by law to be measured may be so measured upon his order.

B. Authority.

1. Statutes. Authority for measuring U.S. vessels as a requisite to their documentation as "vessels of the United States" was initially contained in an Act of Congress dated September 1, 1789. The current standard system of admeasurement was authorized by the 38th Congress on May 6, 1864. The statutes governing measurement are found in 46 App. U.S.C. 71, 72, 75, 77, 80, 81, 82, 83-83k.

7.B.2. Treaties. The 1969 tonnage Convention came into force on 18 July 1982; the U.S. ratified this treaty on 10 February 1983. Executive Order 12419 of 5 May 1983 authorized the Department of transportation to undertake vessel measurement under this convention. The authority for the Coast Guard to measure vessels and issue certificates under the convention was delegated on 23 September 1983. The Articles and Regulations of the 1969 tonnage Convention presently form the basis for international tonnage measurement regulations.

3. Regulations. The regulations for measuring vessels of the United States are contained in 46 CFR 69. Panama Canal Tonnage Rules are contained in 35 CFR 135. Under the International Tonnage Commission, Constantinople of 1873, the Egyptian government has extended measurement authorization to the U.S. and other members of the United Nations. The Suez Canal Tonnage Rules are contained in the Suez Canal Rules of Navigation, Part IV.

4. Additional Sources. Numerous regulatory interpretations and policy decisions have been disseminated through treasury Decisions, Bureau of Customs Notices, Commandant instructions, Navigation and Vessel inspection Circulars (NVIC's), and decision letters issued by the Coast Guard's Office of Merchant Marine SAFETY, Commandant (G-M).

C. Basic Admeasurement Policy.

1. Restrictions Of Activities. Field admeasurers are restricted in tonnage measurement activities in the following ways:

a. They may not formally review vessel plans with the intent merely to estimate tonnages.

b. They may not advise owners or designers on how to reduce tonnages, except in response to specific proposals from the owner, agent, or designer.

c. They may not act as tonnage consultants in any capacity outside the scope of their normal duties.

d. They shall refer any new methods of reducing tonnages, including variations of accepted practices, to Commandant (G-MVI-5) for judgment as to their acceptability and treatment.

2. Appeals And Reviews Of tonnage Measurement Decisions.

a. By the Coast Guard. Any person aggrieved by any measurement decision or action of the officer in charge, marine inspection (OCMI) or measurement personnel may appeal to the commander of the Coast Guard district in which the action or decision was made. Further appeal may be made to Commandant (G-MVI-5) concerning the decision of the district commander. Pending the determination of the appeal, the decision of the OCMI shall remain in effect; the decision of the Commandant is final.

7.C.2. b. By Authorized Agents. A person aggrieved by any measurement decision or action of the American Bureau of Shipping (ABS) or other authorized measurement organization may appeal directly to the tonnage Survey Branch, Commandant (G-MVI-5). Pending the determination of the appeal, the decision of ABS (or ocher authorized organization) shall remain in effect; the decision of the Commandant is final.

c. Reviews. Commandant (G-MVI-5) is responsible for reviewing tonnage measurement cases at its discretion to determine the appropriate application and interpretation of measurement regulations andes determine the accuracy of tonnages assigned.

3. Program Activities.

a. At the Headquarters Level. The tonnage Survey Branch, as a component of the Merchant Vessel inspection organization, maintains overall responsibility for the tonnage measurement program within the Coast Guard. The branch also oversees tonnage measurement of U.S. vessels performed by the American Bureau of Shipping (ABS) and any other U.S. corporation or association authorized to measure vessels. Finally, the branch is responsible for planning, coordinating, and administering the Coast Guard's tonnage measurement program by:

(1) Providing technical advice and assistance to Coast Guard, ABS, or other authorized tonnage measurement personnel when doubts arise over the application or interpretation of measurement rules.

(2) Reviewing cases forwarded from Coast Guard field offices, ABS, or other authorized tonnage measurement authorities for accuracy and consistency of application or interpretation of measurement rules or guidelines.

(3) Resolving disputes between admeasurers and industry when they concern interpretation or application of measurement regulations.

(4) Inspecting field offices and making recommendations for maintaining consistency in interpretation and application of measurement rules.

(5) Coordinating, assigning, and performing tonnage measurement functions in foreign countries.

(6) Assisting district commanders, when required, by measuring or coordinating temporary out-of-district assignment of measurement personnel in case of heavy workloads, complex assignments, or personnel shortages.

(7) Initiating Commandant instructions, NVIC's, and other communications to advise industry, ABS and field personnel of current policy and changing regulations.

7.C.3.a. (8) Examining for approval all cases for water ballast exemptions that exceed 30 percent of a vessel's gross tonnage.

(9) Writing regulations to cover innovations in ship construction that are not covered in existing regulations.

(10) Maintaining oversight and control of ABS or other authorized organizations' measurement activities, to ensure compliance with U.S. statutes and regulations.

(11) Researching, interpreting, and comparing tonnage measurement rules of other countries with those of the U.S., to provide a basis for official U.S. acceptance.

(12) Formulating instructions for guiding measurement personnel, naval architects, vessel designers, shipbuilders, and vessel operators on the application of Panama and Suez Canal tonnage measurement laws and regulations.

(13) Representing the U.S. at international meetings and conferences on tonnage measurement, and cooperating with foreign measurement authorities in exchanging information concerning current tonnage measurement practices and the development and implementation of new international standards.

(14) Reviewing Monthly Workload Reports from field offices to assist in staff resource planning and long-range program planning.

(15) Representing the U.S. at international meetings and meetings with the maritime industry.

b. Field Operations. Coast Guard tonnage measurement personnel serve under the administrative direction of the commanding officers of the units in which they are physically located. The following list shows where Coast Guard field measurement offices are located:

District	Offices
First	CCGDONE(m), Boston, HA
third	MIO New York, NY
	MIO Philadelphia, PA
Fifth	MSO Hampton Roads, VA
Seventh	CCGDSEVEN (m), Miami, FL
	MSO Tampa, FL
	MSO Jacksonville, FL
Eighth	MIO New Orleans, LA
	MID Morgan City, LA
	MSO Mobile, LA
	MIO Houston, TX
Eleventh	MSO Los Angeles/Long Beach, CA
	MSO San Diego, CA
Thirteenth	MSO Puget Sound, Seattle, WA

7.C.3. b. (cont'd) the following functions are performed by Coast Guard field measurement personnel:

(1) Measurement of vessels within an assigned area to establish tonnages for U.S., Panama Canal, Suez Canal or International tonnage Certificates.

(2) Coordination and planning of field workload for expeditious service to industry.

(3) Review of work for accuracy and consistent application of admeasurement rules.

(4) Close coordination with shipbuilders, naval architects, engineers, designers, and vessel operators.

(5) Advising the OCMI and the district commander on tonnage measurement matters.

(6) Compilation and submission of accurate Monthly Workload Reports to the tonnage Survey Branch.

4. Public And Military Vessels.

a. General. U.S. public and military vessels are not required to be documented and, therefore, are not required to be measured for U.S. tonnage assignments. However, government agencies often request tonnage measurement to satisfy licensing, manning, and SAFETY requirements, among others. U.S. Tonnages assigned to government colliers, transports, supply and repair vessels, etc., are determined in accordance with the requirements of 46 CFR 69. There are no requirements for marking the hull with an official number, net tonnage, name, and hailing port. Requirements for markings of deducted spaces are waived for such vessels (46 CFR 69.05-5).

b. Canal Measurements. Tonnage measurement under the rules of the Suez Canal Company is required for all U.S. public and military vessels that transit the Suez Canal as their tolls are based on net tonnage. the Panama Canal Co~ission requires tonnage measurement of all noncombatant public vessels under its rules, as their tolls are based on met tonnage. Combatant vessels are not required to be formally measured because the tolls levied on them are based upon displacement tonnage.

5. U.S. Built Vessels For Foreign Owners. Vessels that will operate under U.S. flag receive first measurement priority. Vessels built for foreign accounts may be measured only upon express prior approval of Commandant (G-MVI-5). Each request will be examined to determine:

a. If tonnages calculated under U.S. rules are compatible with the rules of the vessel's national administration;

7.C.5. b. What impact the measurement of such vessels will have upon the workload of the unit receiving such request; and

c. Whether alternative resources, such as American Bureau of Shipping (ABS) tonnage surveyors, are available.

6. Measurement Charges. When a vessel is measured by the Coast Guard at a location other than a port of entry, Customs station, or port in which an OCMI is located, the owner must reimburse the U.S. government for the costs of measurement (see 46 App. U.S.C. 331). Reimbursable costs are calculated on the hourly salary of the measurer performing the service and travel. They include transportation or mileage charges, based on the distance from the nearest "free port" to the vessel, and return. Charges must be paid prior to issuance of a Certificate of Admeasurement or documentation of the vessel. Admeasurers will notify the vessel owner if the vessel is outside the limits of a "free port" and will advise the owner of the estimated charges for measurement (for foreign measurement policy, see subparagraph 7.E.4.g below).

7. Admeasurement Forms. The following forms are used in tonnage measurement. They may be requested on Form CG-4428 through Supply Center Brooklyn:

Form	Description
CG-1265A	Special Appendix to Certificate of Registry of U.S. Passenger Vessels
CG-1322	Certification of Marking of Official Number
CG-1410	Tonnage Admeasurement (Tonnage Length Exceeds 100 Feet)
CG-1410A	Tonnage Admeasurement (Tonnage Length Does Not Exceed 100 Feet)
CG-1413	Memorandum of Dimensions Taken In Admeasurement (Tonnage Length Exceeds 100 Feet)
CG-1413A	Memorandum of Dimensions Taken In Admeasurement (Tonnage Length Does Not Exceed 100 Feet)
CG-1414	Certificate of Admeasurement
CG-1414A	Certificate of Admeasurement for Vessels Measured Under Simplified Measurement Methods
CG-1415	Admeasurement Index Card
CG-1417	Suez Canal Special Tonnage Certificate
CG-4400	Panama Canal Tonnage Certificate
CG-5343	International Tonnage Certificate, 1969

8. Admeasurement Reports. Each field measurement office is required to submit a Monthly Workload Report to Commandant (G-MVI-5) no later than 15 days after the end of each month. This report, described in the Commandant instruction (COMDTINST) 16717.3 series, indicates the number of vessels measured and their tonnage category, the number of staff-hours expended, the number of vessels remeasured, and other data. Each nongovernment. organization, such as ABS, that is authorized by the

7.C.8. (cont'd) Coast Guard to perform admeasurement services is required to submit a workload report on a quarterly basis.

D. The History Of Admeasurement.

1. Origins In the Middle Ages. The word "tonnage" is derived from the Old English word "tunnage," which evolved during the 16th Century to indicate a vessel's hold capacity for carry ing wine casks, or "tuns." Each tun of 252 English gallons closely approximated the long ton weight of 2240 pounds and occupied a space of nearly 40 cubic feet. Although "ton" is not the best term for measurement, because it is easily confused with a ton of weight, centuries of maritime usage have rendered any change impracticable.

2. The Builder's Old Measurement Rule. After 1790, British ships had been measured for tonnage by dividing the product of the length of the keel, the widest breadth of hull, and the depth of the hold by 94. This system worked reasonably well until it was decided to simplify the process by arbitrarily stating the depth as one-half the vessel's breadth. This became known as the "Builder's Old Measurement Rule." As a result, owners desiring maximum carry ing capacity with the least measured-tonnage began designing ships with narrow beams and very deep drafts. This practice encouraged poor designs and led to a number of ship casualties, but was continued until 1854.

3. The Moorsom System. In 1854, the new British Rules for tonnage measurement were adopted. They were subsequently named after Mr. George Moorsom, a naval architect and chairman of the British Royal Navy Commission. Moorsom had calculated the cubic contents of the entire British merchant navy and divided it by the registered tonnage of the fleet; the result was 98.22 cubic feet. For convenience, Moorsom rounded off the measurement ton as equivalent to 100 cubic feet. For measurement purposes, Moorsom's system defines the volume of a ship's hull with sufficiently accurate results. It has become the generally adopted basis for computing tonnage with some national variations. Originally, this system did not exclude spaces from measurement. However, political and economic pressures subsequently altered the mathematical accuracy of the original system. It was amended to provide for the subtraction of certain spaces, which resulted in establishing two different quantities: gross tonnage and net tonnage.

4. The International Measurement System. Despite the flaws grafted onto it, the Noorsom System formed the basis for all tonnage measurement systems until 1969, when a new international measurement system was created under the auspices of the International Maritime Organization (IMO). This system is discussed is detail in section 7.H below.

7.g. Tonnage Measurement Systems.

1. Introduction. There are seven distinct systems currently employed in the measurement of U.S. vessels:

   a. The Standard System (see 46 CFR 69.03);

   b. The Optional Dual-tonnage Method (see 46 CFR 69.15);

   c. The International Convention on tonnage Measurement of Ships, 1969;

   d. The Optional Simplified Measurement Method for Pleasure Vessels (see 46 CFR 69.17);

   e. The Optional Simplified Measurement Method for Commercial Vessels (see 46 CFR 69.19);

   f. The Panama Canal Tonnage Measurement Rules (see 35 CFR 135); and

   g. The Suez Canal Tonnage Measurement Rules.

2. Prohibition Of Combined Systems. The combining of disparate measurement systems is not allowed. For example, the use of tonnage openings under 46 CFR 69.03-67 (the Standard Admeasurement System) cannot be used in conjunction with the dry cargo and stores exemption of the Optional Dual-tonnage Method, as set forth in 46 CFR 69.15.

3. Applying For tonnage Measurement. The vessel owner, master, or owner's representatives may apply for measurement or remeasurement services in a letter or on an application form obtained from any admeasurement or vessel documentation office, another marine SAFETY unit, ABS, or another authorized organization. All applications, together with plans when required, will be forwarded to the admeasurement office nearest the vessel's location or, alternatively, to /LBS or another U.S. corporation or association authorized to measure vessels. In the case of requests for measurement of U.S. vessels outside the country, applications shell be forwarded to Commandant (G-MVI-5) or to ABS. If the Coast Guard measures the vessel the requesting owner, master, or agent should identify each type of certificate that is required, and must agree in writing that any expenses incurred in the measurement of the vessel(s) shall be borne by him or her, subject to the provisions of 46 U.S.C. 2110.

4. The Format Of Applications.

   a. Standard U.S. System Of Measurement. Applications will be submitted, as prescribed by 46 CFR 69.01-17, to the field admeasurement office nearest the location of the vessel or to ABS. The following information must be included in the application:

      (1) The owner's name, address and telephone number;

      (2) Builder's name, yard telephone number, and address;

7.E.4.a. (3) Vessel's hull or model number (if any);

(4) Vessel's name and official number (if readmeasurement);

(5) Vessel's dimensions (length, breadth, depth);

(6) A statement as to new or rebuilt construction;

(7) Vessel's intended service (passenger, cargo, barge, etc.);

(8) Engine type (oil, gasoline, steam, etc.);

(9) Exact location of vessel on date of measurement;

(10) The estimated time period during which the vessel will be available for measurement;

(11) The vessel's year of construction;

(12) Material(s) used in constructing the hull;

(13) A statement by the owner that he/she will reimburse all expenses incurred by the Coast Guard if the vessel is measured outside the geographic limits of a free port; and

(14) Appropriate plans as prescribed by 46 CFR 69.01-19.

b. Optional Dual-Tonnage Method Of Measurement. Such applications must include all information described in subparagraph 7.E.4.a above and the following additional information:

(1) Molded depth at midship section from second deck at side;

(2) Depth used with tonnage mark cable;

(3) Length of shorter portion of stepped second deck, if any;

(4) Total length of longer and shorter portions of stepped second deck;

(5) Length used with tonnage mark table;

(6) Height of step (break) in the second deck, if any;

(7) Distance from the molded line of the second deck or equivalent to the upper edge of the tonnage mark;

(8) Molded draft to the upper edge of the tonnage mark;

(9) Freeboard from the Load Line Certificate;

(10) Molded draft to the load line;

7.E.4.b. (11) Horizontal distance from the centerline of the load line disk to the apex of the triangle on the tonnage mark;

(12) Vertical distance from the deck line to the tonnage mark;

(13) Vertical distance from the molded line of the second deck or equivalent to the deck line for freeboard;

(14) Allowance for fresh water and tropical waters (1/48 of the molded draft to the upper edge of the tonnage mark);

(15) An indication whether two sets of tonnages are desired; and

(16) The owner's request for confirmation of the proposed location of the tonnage mark, based on the information contained in the application.

c. International Convention For Tonnage Measurement Of Ships, 1969 (the Tonnage Convention Measurement Method). Applications must be submitted as prescribed by NVIC 6-83. They must contain the information required by subparagraph 7.E.4.a above and the following additional information:

(1) Lines plan;

(2) Booklet of offsets at stations;

(3) Capacity plans for tanks and cargo compartments;

(4) Hydrostatic curves;

(5) Construction plans showing measurements of superstructures, hatches, appendages, recesses or any other spaces where volumes are located;

(6) Arrangement plans; and

(7) The date the keel was laid or the vessel was at a similar stage of construction.

d. Optional Simplified Measurement Method For Pleasure Vessels. Applications may be submitted, as prescribed by 46 CFR 69.19-11, to any admeasurement office (see subparagraph 7.C.3.b above). They must include the following information:

(1) The name and address of owner;

(2) The vessel's name;

(3) The documentation office where vessel will be documented;

(4) Official number, state or Coast Guard number, if any;

7.E.4.d. (5) Name and location of builder;

(6) Means of propulsion (oil, gas, steam, sail, etc.) and engine type (inboard, outboard, or none);

(7) Overall length, overall breadth, and overall depth. Dimensions shall be stated on the application in feet and inches, or in feet and decimal fractions of feet to the nearest tenth of a foot;

(8) Vessel's hull number, serial number or model number, if any;

(9) The vessel's date of build;

(10) The type of vessel (towboat, barge, trawler, etc.);

(11) Sketches of the hull (not necessarily to scale) in plan, profile, and cross section views, showing the required dimensions; and

(12) A statement that the information and dimensions are true and accurate and must be signed by the owner, master, or agent.

e. Optional Simplified Measurement Method For Small Commercial Vessels. Applications may be submitted, as prescribed by 46 CFR 69.19-I1, to any admeasurement office (see subparagraph 7.C.3.b above). They must include the following information:

(1) The name end address of the owner;

(2) The vessel's name;

(3) The documentation office where the vessel will be documented;

(4) Official number, state or Coast Guard number, if any;

(5) Name and location of builder;

(6) Means of propulsion (oil, gas, steam, sail, etc.) and engine type (inboard, outboard, or none);

(7) Overall length, overall breadth, and overall depth. Dimensions shall be stated in feet and inches, or in feet and decimal fractions of feet, to the nearest tenth of a foot;

(8) The vessel's hull number, and serial or model number, if any;

(9) The vessel's date of build;

(10) The type of vessel (towboat, barge, trawler, etc.);

(11) Sketches of the hull (not necessarily to scale) in plan, profile, and cross section views, showing required dimensions; and

7.E.4.e. (12) A statement that the information and dimensions are true and accurate and must be signed by the owner, master, or agent.

f. Panama Canal Or Suez Canal Measurement Methods. Measurement applications for a U.S. commercial or public vessel must be submitted to the admeasurement office where the vessel was originally measured for U.S. registry.

g. Foreign Measurement. Applications for measurement of U.S. vessels located outside the U.S. under the Standard U.S. System, the Dual-Tonnage System, or the IMO Tonnage Convention must be forwarded to Commandant (G-MVI-5) or ABS at least three months prior to the required date of measurement. The applicant must agree that all expenses incurred by the admeasurer will be reimbursed to the Coast Guard. Such expenses include transportation, lodging, meals, miscellaneous related expenses, and costs based on the admeasurer's compensation for the period absent from the duty station.

5. Applications For Water Ballast Exemptions (46 CFR 69.03-63(g)). An owner (or representative) seeking exemption of a bona fide water ballast system in excess of 30 percent of the vessel's gross tonnage must submit an application with accompanying justifications to Commandant (G-MVI-5). A copy of the justification shall be forwarded to the appropriate measurement office. The following information is required:

a. Stability calculations, using Form CG-9939 or a reasonable facsimile, showing a single loading and/or operating condition. If needed, several conditions shall be shown to justify the need for each water ballast space claimed. Stability calculations must show each ballast tank at 100 percent capacity;

b. Tank capacity plans or calculations of tank hydrostatics;

c. Hold plan; and

d. A statement providing justifications for requested water ballast, such as seakeeping, stability, etc.

F. The Standard U.S. System Of Measurement.

1. Introduction. Before any vessel is documented or recorded under the laws of the United States, the vessel must be measured under this system and assigned a gross and net tonnage, unless measured under the Optional Dual Tonnage Measurement Method (section 7.G below) or the Optional Simplified Measurement Method (section 7.I below). Any vessel measured under the Standard System that is altered or has changes made to the use of its spaces, so that its gross or net tonnage is affected, must be remeasured.

2. Tonnage Calculation. This system requires that the volume of all closed-in spaces be measured and treated according to their use. These volumes are converted into "register tons," shown on a vessel's certificate of documentation; a register ton is equivalent to 100 cubic

7.F.2. (cont'd) feet. The measurement of a vessel is divided into three separate transactions:

a. Calculating the volumes of the space under the tonnage deck (i,e, the space between the bottom of the vessel and the level of horizontal decking that has been predetermined to be the "tonnage deck");

b. Calculating the volumes of each full length "tween deck" space above the tonnage deck and below the level of the decking that has been predetermined to be the "upper deck to the hull''; and

c. Calculating the volumes of the deck structures located on and above the upper deck to the hull, tier by tier.

3. Measurement Procedures. There are five general steps used in the process of measuring under the Standard System:

a. Measure the whole tonnage;

b. Separately measure exempt spaces;

c. Subtract tonnages of exempt spaces [rom whole tonnage to establish "gross" tonnage;

d. Separately measure the deductible spaces; and

e. Subtract tonnages of deductible spaces from gross tonnage to establish "net" tonnage.

4. Space Exemptions. These are spaces initially measured into the total volume of the vessel that are subsequently excluded from the gross tonnage calculation. Exemptions under the tonnage deck are limited to bona fide water ballast. Provided all regulatory criteria are met, spaces susceptible to exemption include:

a. Water ballast;

b. Open houses and other structures;

c. Passenger cabins that are located above the upper deck;

d. Companions;

e. Galleys;

f. Skylights and air shafts not over propelling machinery; Wheelhouses;

h. Water closets;

i. Anchor gear;

7.F.4. j. Donkey engines and their boilers;

k. Steering gear;

l. Light and air spaces over propelling machinery; and

m. Other machinery spaces.

5. Space Deductions. These are spaces that are subtracted from the gross tonnage to establish a net tonnage. They are listed in four major groups:

a. Spaces for exclusive use of the master;

b. Spaces for exclusive use of the crew;

c. Spaces used for working the vessel; and

d. Allowance for propelling power.

6. Regulatory Provisions. The Standard System of Measurement is contained in 46 App. U.S.C. 77; implementing regulations are contained in 46 CFR 69.03 thru 69.13-157. Over the years, the federal government has provided numerous circulars and notices of official interpretations and policy covering the treatment of spaces and other guidelines not covered by regulation. These are:

a. Department Of Commerce (Commissioner Of Navigation).

(1) Circular Letters;

(2) Bureau of Navigation General Letters;

(3) Bureau of Marine inspection & Navigation Circulars; and

(4) Navigation Bureau Circulars.

b. Department Of The Treasury (U.S. Customs Service).

(1) Treasury Decisions;

(2) Bureau of Customs Special Circulars;

(3) Bureau of Customs Circulars;

(4) Bureau of Customs Notices;

(5) Bureau Letters; and

(6) Marine Circulars.

7.F.6. c. Department Of transportation (U.S. Coast Guard).

(1) Commandant instructions;

(2) Commandant Notices;

(3) Navigation and Vessel inspection Circulars (NVIC's); and

(4) Decision Letters.

7. Adjustments And Corrections Of tonnages (46 CFR 69.05-9). When an error is identified in the calculation of a vessel's tonnage by the measuring authority or when an owner or agent claims that either the measurement procedure or the officially assigned tonnages are in error, an adjustment of tonnage shall be made. The admeasurer shall not remeasure unaltered spaces or spaces for which no error is claimed but shall use the figures shown on the latest record of tonnage measurement unless there is an obvious error therein. The admeasurer shall determine the proper tonnage of the vessel if the tonnage is found to be different from that shown in the vessel's outstanding document (Certificate of Documentation). The outstanding document of the vessel shall be surrendered incident to any adjustment or correction of tonnage and any document issued to that vessel thereafter shall show the adjusted tonnage.

G. The Optional Dual-Tonnage Method Of Measurement.

1. Background. The International Convention on SAFETY of Life at Sea (SOLAS), 1960 called attention to shelter-deck vessels and stated that the practice of permitting openings in the vessel's deck or sides was undesirable from the standpoint of seaworthiness and SAFETY. The convention's delegates recognized the desirability of dispensing with temporary closing appliances and requiring the use of watertight closures, urging this to be done without influencing tonnage assignments. As a result, the International Maritime Organization undertook a study of the problem in 1961. The Optional Dual-Tonnage Method of Measurement, or "tonnage mark" scheme, was recommended as in interim solution prior to establishing a new international system. The U.S. adopted this recommendation in law and developed implementing regulations in 46 CFR 69.15.

2. Regulatory Provisions. The law permits exemption from gross tonnage of certain permanently closed spaces situated on or above the uppermost complete deck exposed to the weather, and certain permanently closed spaces situated between the weather deck and the next complete deck below (the second deck), provided that a tonnage mark is not submerged. The Tonnage Certificate and the Certificate of Documentation of a vessel having a tonnage mark may show two sets of gross and net tonnages, except when the statutory load line is assigned on the assumption that the second deck is the freeboard deck and the tonnage mark is placed at the same level as the load line. In such a case, only one set of tonnages need be shown on the vessel's documents. Regulations also provide that, upon application of the owner and approval by the Commandant, the volumes

7.G.2. (cont'd) shall be omitted from inclusion in gross tonnage, including principally the spaces available for the carriage of dry cargo and stores above the uppermost complete deck and between that deck and the deck next below, and those spaces used for cabins and staterooms on the uppermost complete deck.

H. The International Convention On Tonnage Measurement Of Ships, 1969.

1. Introduction. The "IMO Tonnage Method," which was developed under the auspices of the International Maritime Organization (IMO), applies to vessels of 79 feet and more that engage in international voyages. It provides a gross tonnage that more accurately reflects the vessel's size, and a net tonnage that reflects the vessel's earning capacity without influencing the vessel's design, construction, or operating SAFETY. Under this system, the gross tonnage is based on the molded volume of the hull and deck structures, the net tonnage on the molded volume of the actual cargo spaces. Prerequisites for exclusion from tonnage of "open" spaces on or above the upper deck are very stringent. Artificial methods previously employed to reduce gross or net tonnages, such as special frame or floor construction, added light-and-air casings, special engine room design, and water ballast, are not available. The IMO Tonnage Convention came into force on 18 July 1982.

2. Issuance Of IMO Tonnage Certificates. An International Tonnage Certificate may be issued by the Coast Guard or, at the request of the applicant, by ABS for vessels required to be measured in accordance with the tonnage Convention regulations. (See subparagraph 7.H.4 below.) Certificates may not be issued to vessels registered under a government that is not party to the convention. Vessels constructed in the United States for foreign account may be admeasured under the convention rules at the request of the appropriate government. Such requests must be cleared through Commandant (G-MVI-5).

3. U.S. Regulatory Provisions.

a. General. Implementing legislation will be proposed to make the IMO system the basic U.S. admeasurement system for vessels of 24 meters (79 feet) and larger, whether or not they engage in international voyages. In the interim, it is necessary to measure applicable vessels under both the Standard U.S. System for gross and net register tonnages and the IMO System for Convention Tonnage gross and net tonnages. Convention tonnage shall be listed on the "International Tonnage Certificate, 1969." Standard U.S. System tonnage shall continue to be listed on the Certificate of Documentation.

b. The Interim Tonnage Measurement Scheme.

(1) Recognizing that Convention tonnage assignments may require some vessels to comply with more stringent international regulations,

7.H.3.b. (1) (cont'd) the Coast Guard is applying the provisions of the following IMO Resolutions:

(a) IMO Resolution A. 494 (xII), Revised Interim Scheme for tonnage Measurement for Certain Ships (SOLAS); and

(b) IMO Resolution A. 541 (XIII), Interim Scheme for Tonnage Measurement for Certain Ships (MARPOL).

(2) These resolutions permit certain U.S. vessels that have been measured under the tonnage Convention to also be measured under either the provisions of the existing U.S. standard system of measurement (section 7.F above), or the optional dual-tonnage method of measurement (section 7.G above) and to use that tonnage for limited international applications.

(3) Separate instructions for implementing these interim schemes will be distributed to authorities responsible for issuing SOLAS and MARPOL certificates.

4. Application.

a. General. The IMO tonnage Convention applies to all ships 24 meters (79 feet) or more in length, including barges and yachts, that engage in international voyages. This includes ships that request a registry endorsement under U.S. vessel documentation Laws, ships registered in U.S. Territories, and state-numbered and unnumbered vessels. For convention purposes, an "international voyage" is a sea voyage from the United States to a port outside the United States, or conversely.

b. Non-Subject Vessels. The Tonnage Convention does not apply to:

(1) Vessels of 24 meters (79 feet) and larger that do not engage in international voyages;

(2) Any vessels under 24 meters (79 feet) in length;

(3) Ships of war; and

(4) Vessels of any size that navigate solely on the Great Lakes.

c. Requirements For IMO tonnage Certificates. Vessels subject to tonnage Convention measurement are required to present a valid International tonnage Certificate when entering the ports of ocher contracting governments, as follows:

(1) New Vessels And Existing Vessels that have Undergone Substantial Alterations Or Modifications On Or After 18 July 1982: immediately;

7.H.4.c. (2) All Other Existing Vessels: By 18 July 1994, or earlier at the owner's option. [NOTE: Once an International Tonnage Certificate is issued, the vessel cannot subsequently use its pre-existing register tonnages for other international conventions.]

5. Definitions Used In the IMO Tonnage Convention.

a. "International Voyage." This means a sea voyage from a country to which the present convention applies to a port outside that country, or conversely. For this purpose, every territory for which international relations are the responsibility of a contracting government, or for which the United Nations are the administering authority, is regarded as a separate country (see Article 2(3) of the convention).

b. "New Vessel." This means a vessel, the keel of which is laid, or which is at a similar stage of construction, on or after 18 July 1982 (see Article 2(6) of the convention).

c. "Existing Vessel." This means any vessel that is not a new vessel, i.e., its keel was laid or at a similar stage of construction before 18 July 1982 (see Article 2(7) of the convention).

d. "Gross tonnage." This means the measure of the overall size of a ship, determined in accordance with the provisions of Article 2(4) of the convention. [NOTE: Measurements are taken to the molded lines of the hull and deck structures, the volumes of which will be modified by the gross tonnage coefficient.]

e. "Net tonnage." This means the measure of the useful capacity of a ship determined in accordance with the provisions of Article 2(5) of the present convention. [NOTE: The volumes of the cargo and passenger spaces as modified by a coefficient.]

f. "Great Lakes." For purposes of the convention, these are defined as "the Great Lakes of North America and the River St. Lawrence as far east as a rhumb line drawn from Cap des Rosiers to West Point, Anticosti Island and, on the north side of Anticosti Island, the meridian of longitude 63' W." (see Article 4(2)(a) of the convention).

g. "Length." This means 96 percent of the total length on the waterline, at 85 percent of the least molded depth measured from the top of the keel, or the length from the fore side of the stem to the axis of the rudder stock on that waterline, if that be greater. In vessels designed with a rake of keel, the waterline on which this length is measured shall be parallel to the design waterline (see Article 2(8) of the convention).

7.I. The Optional Simplified Measurement Method For Small Vessels. This method enables owners of commercial vessels under 79 feet in length, yachts of any length, and non-self-propelled vessels to take measurements of length, breadth, and depth and forward them to a measurement office for computation of tonnages. In most cases, this eliminates the need for an admeasurer to visit the vessel. Where an owner's measurement is questioned, a physical inspection of the vessel is justified. Vessels measured under these provisions may, at the option of the owner, be measured under the Standard Measurement System. the regulations for optional simplified measurement are contained in 16 CFR 69.17 and 69.19.

J. Measurement For Transit Of The Panama Canal.

1. Introduction. The Panama Canal measurement system differs from systems employed by the U.S. for the assignment of tonnages. As the canal is self-supporting (i.e., all reasonable fees must be exacted for its use), there are fewer allowances for exemptions and deductions of spaces, resulting in higher gross and net tonnages. Questions concerning the application or interpretation of the Panama Canal Rules should be directed to Commandant (G-MVI-5). Field measurers shall not contact Panama Canal Commssion authorities directly, except in emergencies.

2. Computations Of Displacement Tonnages. Displacement tonnage is determined from the arrival draft, as taken from the displacement curves of a vessel. This is the tonnage used to determine the toll charges for warships, floating drydocks, and dredges that transit the Panama Canal. "Warships" are considered to be all vessels of war (other than transports, colliers, hospital ships, and supply ships) that are owned by a government and employed for military or naval purposes.

3. Forwarding Of Panama Canal Certificates. COMDTINST 16717.1B series prescribes the procedures for forwarding Panama Canal Certificates to the Panama Canal Commission. District commanders shall forward, under cover letter, one copy of each Panama Canal Certificate issued directly to the Panama Canal Commission, Canal Support Division, Director of Admeasurement, APO Miami, FL 34011. In cases of nonstandard types or first vessels of a new type, a set of drawings as listed in 46 CFR 69.01-19(a)(1); (2), (3), and (4) shall be included with a copy of the vessel's Form CC-1410.

K. Measurement For Transit Of the Suez Canal. Special Suez Canal tonnage regulations require that a Suez Canal Tonnage Certificate be presented for transiting the canal. These tonnages are used as a basis for toll collection. This system of measurement differs from the U.S. and Panama Canal rules in several regards. Crew deductions are limited to 10 percent of the gross tonnage, propelling machinery allowances are more liberal, and the treatment of excluded spaces is more restrictive. The Suez Canal Regulations are located in the Suez Canal Rules of Navigation, Part IV.

MARINE SAFETY MANUAL

CHAPTER 8. CHEMICAL ENGINEERING
(TO BE DEVELOPED)

CHAPTER 9. CARGOES OF HAZARDOUS MATERIALS
(TO BE DEVELOPED)

MARINE SAFETY MANUAL

VOLUME IV

LIST OF FIGURES

NUMBER	TITLE	PAGE
1-1	REGULATIONS LISTING REQUIRED PLANS AND SPECIFICATIONS	1-5
3-1	ELECTRICAL PLAN REVIEW GUIDE TYPICAL ONE-LINE DIAGRAM	3-5
3-2	INDEX FOR REFERENCE DRAWING TO TITLE 46 CFR, NEC, IEEE STD. 45-1983, UL, ETC.	3-6
3-3	SAMPLE LOAD ANALYSIS	3-10
3-4	TYPICAL OPERATING LOAD FACTORS	3-12
3-5	LIST OF ELECTRICAL HAZARD GROUP CLASSIFICATIONS FOR UNMANNED BARGES CARRYING BULK DANGEROUS CARGOES	3-20
3-6	NEC ART. 500 - TABLE 500-2(b)	3-23
3-7	TANKSHIP WEATHERDECK CRITERIA	3-24
3-8	SPECIFIED HAZARDOUS LOCATIONS	3-25
3-9	SUMMARY OF MINIMUM REQUIREMENTS FOR CARRIAGE OF CERTAIN BULK DANGEROUS CARGOES ON ANNE TANK BARGES	3-26
3-10	RECOMMENDED PLAN REVIEW CHECK-OFF FOR HAZARDOUS LOCATIONS	3-27
3-11	3-PHASE, 208 VAC MOTOR BRANCH CIRCUIT QUICK-REFERENCE TABLE FOR SINGLE BANKED CABLES	3-37
3-12	3-PHASE, 460 VAC MOTOR BRANCH CIRCUIT QUICK-REFERENCE TABLE	3-39
4-1	WINCH DRUMS AND FLEET ANGLES	4-8
4-2	LOCATION OF LIFEBOAT WINCHES	4-9
4-3	LIFEBOAT FALLS	4-13
4-4	LOCATION OF LIFEBOATS RELATIVE TO PROPELLER	4-15
4-5	ACCESS TO STOWED LIFEBOATS	4-15
4-6	DAVIT SPAN AND LIFELINES	4-17
4-7	LIFEBOAT SKATES AND SKID STANCHIONS	4-19

MARINE SAFETY MANUAL

VOLUME IV

LIST OF FIGURES

NUMBER	TITLE	PAGE
4-8	OVERBOARD DISCHARGE OPENINGS	4-19
4-9	EMBARKATION LADDERS FOR LIFEBOATS	4-22
4-10	PILOT LADDERS	4-22
4-11	OVER-THE-SIDE RIGGING OF PILOT LADDERS	4-23
4-12	ILLUMINATION OF STOWAGE AREAS	4-25
4-13	PORTABLE AND SEMI-PORTABLE FIRE EXTINGUISHERS	4-32
6-1	WEATHER CRITERION	6-14
6-2	TRANSVERSE STABILITY STANDARD	6-28
6-3	LONGITUDINAL STABILITY STANDARD	6-28
6-3.5	DERIVATION OF THE TOWLINE FULL FORMULAS FOR TWIN AND SINGLE VOITH-SCHNEIDER PROPELLER TUGS	6-31
6-4	NECESSARY ITEMS TO BE INCLUDED IN AN OPERATING MANUAL FOR MODU'S	6-42
6-5	GM VALDES FOR DECK CARGO BARGES IN OCEAN, COASTWISE AND GREAT LAKES WINTER SERVICE	6-49
6-6	GM VALUES FOR DECK CARGO BARGES IN GREAT LAKES SUMMER SERVICE	6-50
6-7	TYPICAL STATIC WIND HEELING MOMENT CURVE	6-59
6-8	TYPICAL STATIC CARGO HEELING MOMENT CURVE	6-59
6-9	TYPICAL STATIC BILGE WATER HEELING MOMENT CURVE	6-59
6-10	TYPICAL STATIC TOTAL HEELING MOMENT CURVE	6-59
6-11	TYPICAL STATIC STABILITY CURVE NEGLECTING FORM GAIN	6-59
6-12	RIGHTING AND HEELING MOMENT	6-59
6-13	HEELING MOMENT COEFFICIENTS FOR POSSIBLE CARGO SHIFT	6-60
6-14	MEAN HEELING MOMENT COEFFICIENTS FOR POSSIBLE CARGO SHIFT	6-61

MARINE SAFETY MANUAL

VOLUME IV

LIST OF FIGURES

NUMBER	TITLE	PAGE
6-15	CURVES FOR FREE SURFACE CORRECTION IN TANKS NEARLY FULL OR NEARLY EMPTY	6-62
6-16	MEAN FORM RIGHTING MOMENT FACTOR	6-63
6-17	MEAN CARGO MOMENT	6-64
6-18	MEAN CARGO MOMENT	6-64
6-19	EXAMPLE OF CALCULATION OF Mb	6-65
6-20	TYPICAL COMPUTATION FOR A 750' X 70' X 36' BULK CARRIER	6-67
6-20.5	DETERMINING STABILITY: PROOF TESTS/INCLININGS/ DEADWEIGHT SURVEYS	6-72
6-21	COUNTRIES PARTY TO THE INTERNATIONAL CONVENTION ON LOAD LINES, 1966	6-85
6-22	INTERRATIONAL LOAD LINE EXEMPTION CERTIFICATE	6-93
6-23	COASTWISE LOAD LINE CERTIFICATE	6-95
6-24	INSERT OF A WELDED PLATE IN A RIVETED HULL	6-116
6-25	INSERT OF A BUTT WELDED PLATE IN A LAPPED HULL	6-116