U.S. Department of
Homeland Security

United States
Coast Guard

ET1 UNIT 3: ELECTRONIC SYSTEMS PLANNED MAINTENANCE

Coast GUARD
Training Center Petaluma

U. S. Coast Guard
Pamphlet No. P12204
(11/09)

ET1 UNIT 2: ELECTRONIC SYSTEMS PLANNED MAINTENANCE

Creation Date: 11/09
Revision Date: 11/12

U. S. Coast Guard
Training Center
Petaluma, CA. 94952
(707) 765-7129

QUESTIONS ABOUT THIS TEXT SHOULD BE
ADDRESSED TO THE SUBJECT MATTER SPECIALIST
FOR THE ET RATING

Record of Changes			
Change Number	Date of Change	Date Entered	By Whom Entered

TABLE OF CONTENTS

TITLE	PAGE
Acknowledgements and References	ii
Notice to Students	iii
Lessons	
#1 How to Maintain an integrated networked camera system	1-1
Appendixes	
A Pamphlet Quiz	A-1
B Pamphlet Answers	B -1

Acknowledgments and References

Acknowledgments

Material is included in this pamphlet through courtesy of the designated source. The Coast Guard appreciates permission of the source to use this material, which contributes greatly to the effectiveness of this course. Copies or reproductions of this material are NOT authorized without permission of the appropriate source.

The Coast Guard wishes to thank the following individuals for their expertise and support in the development of this document

ETC Chris Meyer

ETCS Richard Nieman

ETCM Lautenschlager

List of References

This pamphlet contains original material developed at the U. S. Coast Guard Training Center, Petaluma, California, and excerpts from the following technical publications:

- Electronics Manual, COMDTINST M10550.25 (series)
- Manufacturer's Technical Manuals and Publications

Notice to Students

Purpose

This pamphlet serves as a training aid to provide you with a general knowledge of Electronic Systems Planned Maintenance tasks required of an ET1.

Important Note

This text has been complied for TRAINING ONLY. It should NOT be used in place of official directives or publications. The test information is current according to the references listed. You should, however, remember that it is YOUR responsibility to keep up with the latest professional information available for your rating. Current information is available from the Enlisted Performance Qualifications version 03-2009.

Course Content

This course content is based on the requirements stated in the Enlisted Performance Qualifications version 03-2009.

Record of Changes

From time to time courses, after they are printed, have minor editorial changes made to them by the Subject Matter Specialist that do not require a new course. The student is responsible for any changes made to the course after printing and receipt from the Coast Guard Institute. The Coast Guard Institute will post on their web site a listing of current changes based on the course code and edition that should be downloaded in a **.pdf** format and entered in the current course material. The Coast Guard Institute will send an errata sheet out with each ordered course that list the required changes.

Pamphlet Content

This pamphlet contains one lesson:

Lesson 1: How to Maintain an Integrated Networked Video Camera System

Notice to Students

Learning Objectives

Read the learning objectives before you begin reading the text. The objectives will guide you through the text and help you answer the questions in the self-quiz at the end of each lesson.

Quizzes

Each lesson has a self-quiz and each pamphlet has a pamphlet review quiz. You will find the answers to each quiz on the pages following the quiz. Included are the reference pages for the answers.

These self-quizzes are meant to check your comprehension of the material covered. If you are having problems understanding a section, go through it again or ask someone for help. The pamphlet review quiz questions are samples of the type of questions you will find on the end-of-course-test (EOCT).

SWE Study Suggestion

Servicewide exam questions for your rate and pay grade are based on the Professional and Military Requirements sections of the Enlisted Performance Qualifications version 03-2009.

If you use the references from this text and consult the Enlisted Performance Qualifications, you should have good information for review when you prepare for your servicewide exam (SWE).

Lesson 1

HOW TO MAINTAIN AN INTEGRATED NETWORKED VIDEO SYSTEM

Overview

Introduction

The Coast Guard employs a number of networked video systems aboard cutters. Some of these systems are supported by ELC through the APA Reparable (0C) program. However, most of the video systems an ET1 will encounter in field are not be supported by ELC. Repair or replacement of most video network systems will involve working with Current-Off-The-Shelf (COTS) equipment. This means the repair technician may be required to use allocated funds to purchase replacement parts or similar equipment via commercial sources.

This lesson covers the following topics:

- Video System Overview
- Specific Requirements
- Low Light Level Definitions
- Equipment Description
- Planned Life Cycle
- Operational Environment
- Block Diagrams for Different Operating Platforms
- Equipment Interfaces
- Supply Requirements
- Support Level
- CGPMS and Planned Maintenance

Note: *Due to the high number of different video systems used by the Coast Guard, this lesson will only address the Flight Deck Video System (FDVS).*

Objectives

Given the proper equipment and job aids, **MAINTAIN** a networked video system.

References

The following references were used for this lesson:

- Electronics Manual, COMDTINST M10550.25 (series)
- Equipment Technical Manual

FDVS (Flight Deck Video System)

Video System Overview

The Flight Deck Video System (FDVS) provides air capable USCG cutters with a day/night extremely low light level imaging capability to enhance the ability to safely land a helicopter on deck in normal lighting and during night operations.

Specific Requirements

The objective of the FDVS is to meet the requirements outlined in COMDTINST 3120.13, Shipboard Helicopter Operations Facility Certification Program. This program requires that on all air capable Coast Guard cutters, a low light level FDVS consisting of at least two cameras, one pan-tilt mechanism, associated monitors and remote controls will be used to provide a clear view of the flight deck, approach, and departure zones at the Helicopter Control Station (HCS) in the pilothouse.

Specific requirements for the FDVS are listed below:

- A zoom lens camera mounted on a pan/tilt mechanism, installed in such a manner that, with the use of the zoom, pan and tilt feature, it provides a clear, unobstructed view of the entire flight deck aft of the forward peripheral line, as well as the helicopter approach path from ¼ mile aft of the ship, and the helicopter departure zone directly abeam and on either side of the forward peripheral line

- A second camera with its lens fixed at a wide-angle setting, installed in such a manner that, without use of zoom, pan or tilt feature, the camera can provide a clear, unobstructed view of the entire flight deck area within the peripheral lines, as well as the Landing Safety Officer (LSO) positioned at normal flight quarters station

- The Helicopter Control Station (HCS) in the pilothouse will be equipped with suitable FDVS monitor(s) and remote controls positioned in such a manner that they can be easily viewed and operated by the Helicopter Control Officer (HCO) while performing any duties directly involved with controlling helicopter operations. The monitor will be linked to a recording device with a date/time feature

Continued on next page

FDVS (Flight Deck Video System) (Continued)

Low Light Level Definitions

The table below provides a list of key terms, definitions, and examples of various light level conditions:

Term	Definition	Example
Lux	The unit by which illumination is measured	Ten lux equals the amount of illumination emitted by an object from one candle positioned at a distance of one foot.
Low Light Level (LLL)	Light level <.95	A night with a full moon and clear sky.
Extremely Low Light Level	Light level <.0003	A moonless night with a partially overcast sky.
Low Light Level (for training purposes)*	Light level <.0025	No example given.

** Requirement established by ATC Mobile*

Planned Life Cycle

As a result of an engineering retrofit of the cameras and pan/tilt equipment, the upgraded Flight Deck Video System is expected to meet a forecasted life cycle of 5 years, extending the life cycle from initial outfitting in 1996 to 2007.

Continued on next page

FDVS (Flight Deck Video System) (Continued)

Operational Environment

The only parts of the FDVS exposed to the marine environment are the cameras and the pan/tilts. A detailed description of these parts and their location are listed below:

- The camera, normally mounted on the hangar top, side or flying bridge is contained in an environmental enclosure. This enclosure is a ¼" tempered aluminum tube that contains the black and white charge-coupled device (CCD) camera equipped with thermostatically and electronically controlled electrical heating elements, the lens (wide-angle fixed or zoom), a housing heater and a 120VAC/12VDC converter. The housing contains desiccant material and is sealed at both ends by radial pressure "O" rings. Once sealed the housing is pressurized with 5 PSI of dry nitrogen. The housing contains a humidity indicator visible from the front of the camera through the glass window. The normally blue indicator will turn pink with excess humidity, indicating service is needed.

- The pan/tilt is normally mounted in close proximity to the zoom lens camera. The pan/tilt is a commercial-off-the-shelf (COTS) medium-duty unit that meets the NEMA-6 weatherproof standard. All external connections are weatherproofed

Equipment Mounting and Configuration

Equipment mounting and configuration descriptions are listed below:

- A zoom lens camera is mounted on a pan tilt system and controlled at the Helicopter Control Station for maximum flexibility in tracking the helicopter on approach and landing

- A fixed wide-angle lens camera is mounted on the port or starboard forward part of the flight deck depending on landing configuration of the ship. This camera is the safety camera designed to provide viewing of the Landing Safety Officer and flight deck

- Depending on the configuration of the cutter (see the examples on the following pages) the video is distributed through video switchers and/or video distribution amplifiers to monitors or a shipboard video distribution system. The video is also linked to recording devices with a date/time feature

Note: *Neither camera, zoom or wide-angle lens, is light intensified or uses an infrared system. Some light is needed to function properly.*

Continued on next page

FDVS Equipment

Block Diagrams

FDVS block diagrams are provided for the following WHEC and WMEC platforms:

- WHEC 378’ FDVS (V1)
- WHEC 378’ FDVS (V2)
- WHEC 378’ FDVS (V3)
- WMEC 270’ FDVS (V2)
- WMEC 210’ FDVS (V3)
- WMEC 270’ FDVS (V4)
- WMEC 210’ FDVS (V5)

WHEC 378’ FDVS V(1)

Below is a block diagram of the 378’ FDVS V(1):

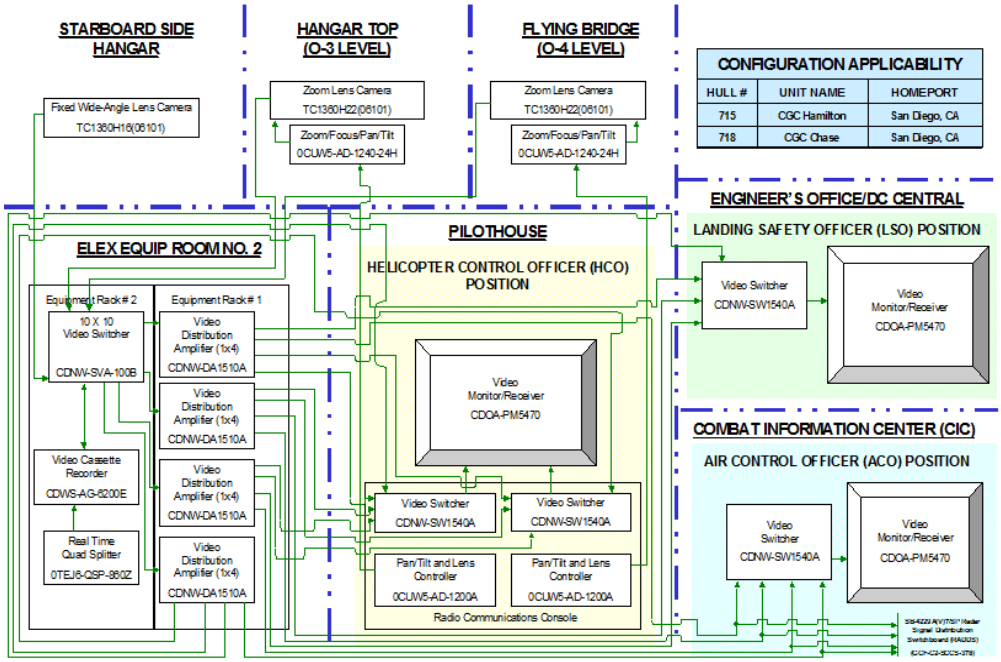

Continued on next page

FDVS Equipment (Continued)

WHEC 378' FDVS V(2)

Below is a block diagram of the 378' FDVS V(2):

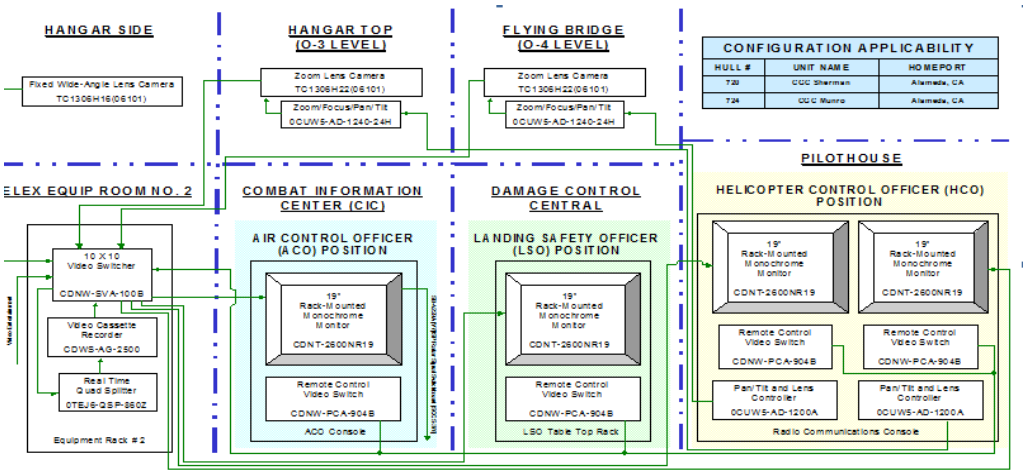

WHEC 378' FDVS V(3)

Below is a block diagram of the 378' FDVS V(3):

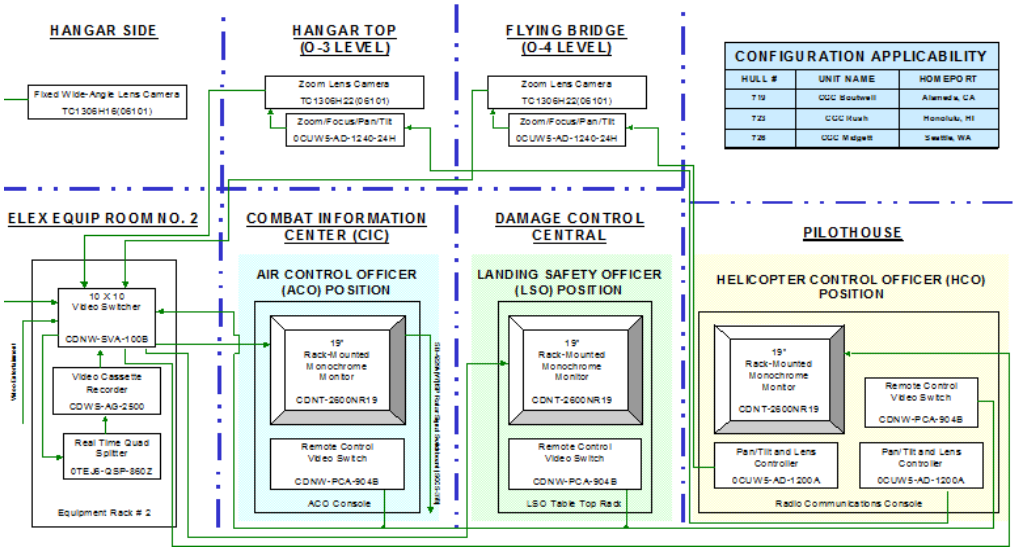

Continued on next page

FDVS Equipment (Continued)

WMEC 270' FDVS V(4)

Below is a block diagram of the 270' FDVS V(4):

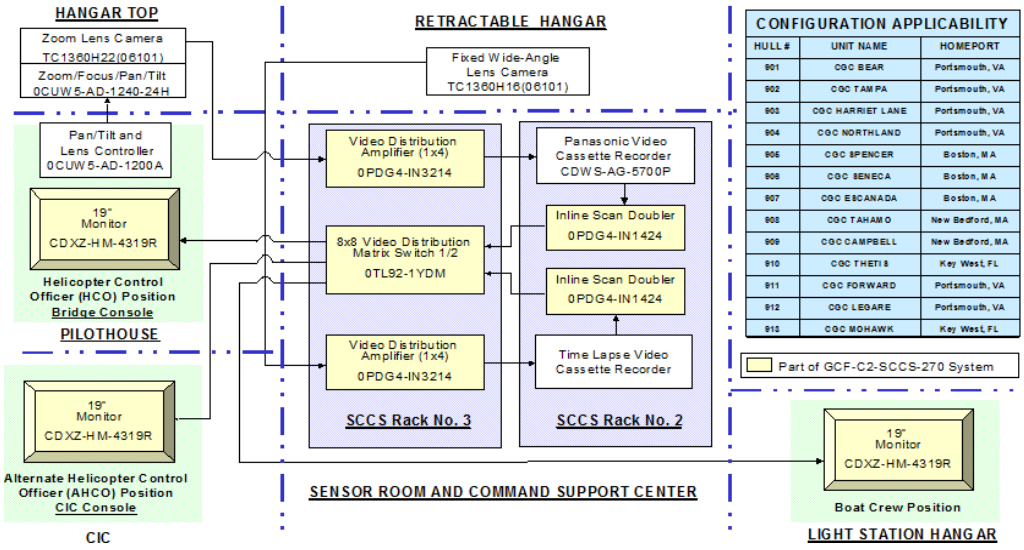

CONFIGURATION APPLICABILITY

HULL #	UNIT NAME	HOMEPORT
901	CGC BEAR	Portsmouth, VA
902	CGC TAMPA	Portsmouth, VA
903	CGC HARRIET LANE	Portsmouth, VA
904	CGC NORTHLAND	Portsmouth, VA
906	CGC SPENCER	Boston, MA
908	CGC SENECA	Boston, MA
907	CGC ESCANABA	Boston, MA
908	CGC TAHAMO	New Bedford, MA
909	CGC CAMPBELL	New Bedford, MA
910	CGC THETIS	Key West, FL
911	CGC FORWARD	Portsmouth, VA
912	CGC LEGARE	Portsmouth, VA
913	CGC MOHAWK	Key West, FL

WMEC 210' FDVS V(5)

Below is a block diagram of the 210' FDVS V(5):

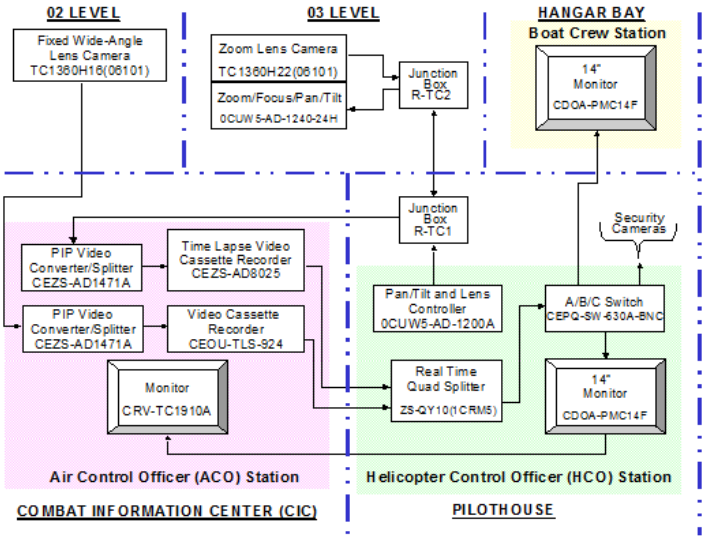

CONFIGURATION APPLICABILITY

HULL #	UNIT NAME	HOMEPORT
615	CGC RELIANCE	Portsmouth, NH
616	CGC DILIGENCE	Wilmington, NC
617	CGC VIGILANT	Patrick AFB, FL
618	CGC ACTIVE	Port Angeles, WA
619	CGC CONFIDENCE	Patrick AFB, FL
620	CGC RESOLUTE	St. Petersburg, FL
621	CGC VALIANT	Miami Beach, FL
622	CGC COURAGEOUS	Panama City, FL
623	CGC STEADFAST	Warrenton, OR
624	CGC DAUNTLESS	Galveston, TX
625	CGC VENTUROUS	St. Petersburg, FL
626	CGC DEPENDABLE	Cape May, NJ
627	CGC VIGILANT	Cape May, NJ
628	CGC DURABLE	St. Petersburg, FL
629	CGC DECISIVE	Pascagoula, MS
630	CGC ALERT	Warrenton, OR
39	CGC ALEX HALEY*	Kodiak, AK

* The Coast Guard Cutter Alex Haley shares the configuration of the 210' WMECs, however, has one extra Zoom Lens Camera mounted forward.

Continued on next page

FDVS Equipment (Continued)

WAGB 399' FDVS V(6)

Below is a block diagram of the 399' FDVS V(6):

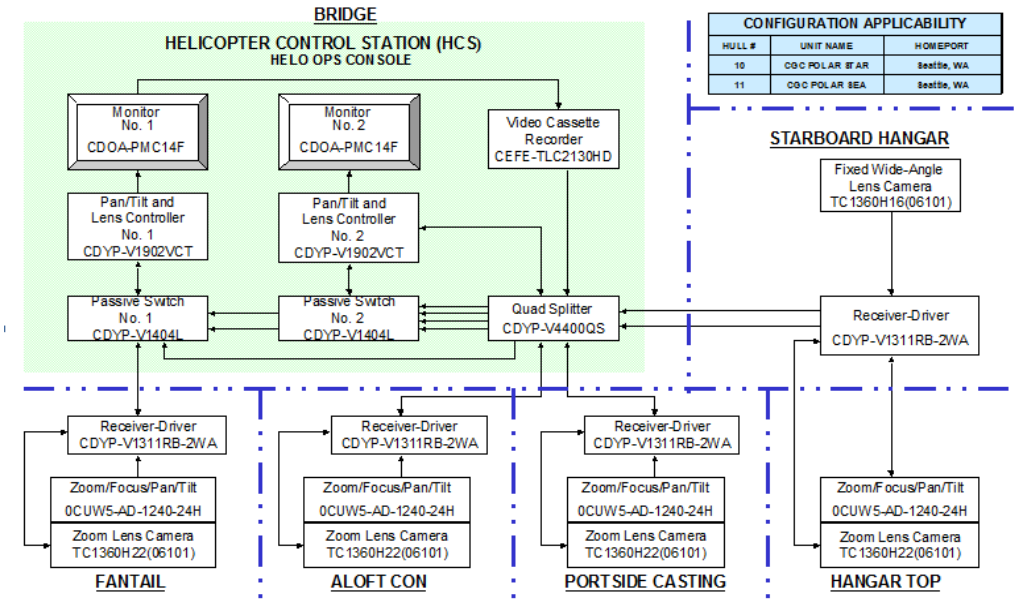

Equipment Interfaces

Equipment interfaces for specific operational platforms are listed below:

- **399' WAGB Icebreaker**: The FDVS video from the fixed and the zoom lens cameras and the control signals from the pan/tilt and lens controllers are input to a receiver-driver, through passive switches for monitoring at the HCS from various camera locations
- **378' WHEC**: The FDVS video output from the fixed and the zoom lens cameras are input to a video switch matrix for further distribution to the HCS, Alternate HCS, video recorder and other monitor locations
- **270' WMEC:** The FDVS video output from the fixed and the zoom lens camera systems are input separately, via video distribution amplifiers, to the individual video cassette recorders and the SCCS-270 video distribution matrix. From the video distribution matrix, the video is distributed to the HCS and the Alternate HCS via the SCCS-270 system. The FDVS is fully integrated into the 270's Shipboard Command and Control System (GCF-C2-SCCS-270) so that FDVS video is available on all SCCS monitors.
- **210' WMEC:** The FDVS video output from the fixed and the zoom lens cameras are input to individual 24-hour time-lapse video recorders and then routed to a quad splitter for monitoring at the HCS and Alternate HCS.

FDVS Support

Supply Requirements

The FDVS is supported by the ELC though the APA Reparable (0C) program and consumables. Additionally, certain items will be replaceable via commercial vendor or other government agency.

Support Level

Coast Guard cutters will not receive spare parts for this system. Due to the complexity and training needed to properly focus the lens and camera, all camera repairs will be completed at the Depot Level.

The CG Yard will serve as the Depot Level for the cameras, managed by ELC (021). ELC will maintain an adequate level of whole end item components and subassemblies to meet the requirements for component availability.

CGPMS and Planned Maintenance

Equipment has been submitted to ELC for CGPMS development. In the interim, technicians are directed to use Coast Guard Maintenance Procedure 43911/001 Rev 01.

Organizational level planned maintenance will be reduced to cleaning and inspection of all assemblies, subassemblies, and cabling.

Appendix A

Questions

1. What does the term COTS stand for?

   A. Custom Off The Shelf
   B. Custom On The Shelf
   C. Current Off The Shelf
   D. Current On Then Shelf

2. What is the unit of measurement for illumination called?

   A. Lax
   B. Candle power
   C. Candle hour
   D. Lux

3. What is needed for the zoom or wide-angle camera to function properly?

   A. Light
   B. Water
   C. A waterproof lens
   D. Signal reference ground

4. What is the life expectancy of the FDVS?

   A. One year
   B. Two years
   C. Five years
   D. Ten years

This page intentionally left blank

Appendix B

Answers

Question	Answer	Reference
1.	C	1-1
2.	D	1-3
3.	A	1-4
4.	C	1-3

Request for Feedback – ET1 Electronic Systems Planned Maintenance

Suggestions and Corrections

Please note your suggestions, corrections, and comments below.

Page	Location on Page	What Correction is Needed

Your Comments

If you were writing this pamphlet, what improvements would you make? What was good about it? What did you not like about it? Please be specific in your comments/suggestions.

To Contact You

Please provide the following so that we can contact you if needed.

Name	Unit	Phone
		( )

Mail, Fax, or Call

Please mail, fax, or call your information to:

Commanding Officer (CED)
U.S. Coast Guard
Training Center Petaluma
599 Tomales Rd.

Petaluma, Ca 94952

PHONE: (707) 765-7129
FAX: (707) 765-7033

ATTN: _ET _Subject Matter Specialist_

LIST OF MATERIALS FURNISHED

COURSE TITLE: **ET1** COURSE CODE: **0122** EDITION: **3**

1. The materials for the course you requested are listed below. If any item listed is not enclosed in this package, report that fact to your Educational Service Officer (ESO).

2. If you enrolled in this course for credit, you have **36 months** to complete the course. If you requested course materials only, you will not receive an End-of-Course Test (EOCT) and will not receive credit for the course.

COMPONENT	NUMBER	QTY
PQG Certification Pamphlet	P12201	01
Administration	P12202	01
Electronic Installation Standards	P12203	01
Electronic Systems Planned Maintenance	P12204	01