Rotation Detection and the VRB-25 Rotating Beacon

A recent re-examination of the system wiring in the rotation detection and monitoring circuit of a VRB-25 Rotating Beacon has resulted in a few minor recommended changes to the standard system configurations that will improve the reliability of VRB-25 rotation detecting and monitoring.

Depending on your system type, the hardware that does the actual monitoring of rotation and decision making, or the “brains” of the system, is either the Solar Aid Controller (SACII or SACIII) or the NAVAID Sensor Card (via the Audio Visual Controller) based on channel activity provided by VRB-25's rotation detector. The channel activity signal this hardware looks for is a periodic zero-volt signal, or “ground” pulse as close to zero-volts as possible, in order to hold off internal timers from timing out and posting a rotation failure. What provides this channel activity signal to the hardware is an integrated rotation detector inside the VRB's CALC-20 controller, which is comprised of a solid-state relay optocoupler. Since there is a resistance associated with the output side of this opto relay, a closer look at this and all the other components in the "rotation detection loop" in each system has resulted in the recommendation to minimize the total resistance of the loop for highest reliability operation and best rotation detection performance. The loop is the circuit path starting at system negative (0-volts), running up to the rotation detector, and then back to the monitoring input. In contrast, the magnetic reed-relay rotation detectors that were used in previous-generation rotating beacons had dry-contact closures with essentially no associated losses or resistances to account for. With the VRB-25, things are a little different (for the reasons stated above). Each configuration is addressed separately here as there are a few differences between the SAC-based and NAVAID sensor-based rotation monitoring circuits. These changes will be reflected in future revisions to the standard drawings and servicing guides.

VRB-25/SDB/SACII (or SACIII) Configuration. Referring to standard drawing 140410, the main issue with the present design is that the negative leg of the rotation detection loop taps off the motor (-) inside the VRB’s housing. The problem with this is that as soon as the motor turns on and starts drawing current, the voltage at the motor (-) terminal is no longer zero-volts due to the associated voltage drop across the power feeder line; and, long wire runs between the SDB and VRB only exacerbate this problem. Remember though, the rotation detector signal, or channel activity, that the SAC is looking for are “ground” pulses, or as close to zero-volt pulses as possible. If the signal drifts too far north from zero-volts, the information may not register properly within the SAC and eventually a false rotation failure alarm will occur. Additionally, since the negative (-) power feeder to the motor is not shielded (which, by the way, is also one-half of the rotation detection loop in the present configuration), there could be electro-magnetic interference issues associated with that. Here is the recommended change for this configuration:

a. Inside the VRB housing, disconnect and discard the jumper wire that bridges one side of the Rotation Detector terminal to the Motor (-) terminal.

b. Disconnect and replace the existing shielded one-conductor rotation detector cable with a shielded two-conductor cable (three conductors total) but do not connect the shielding itself to any terminal inside the VRB. The rotation detector input from the VRB-25 should now come in to the SACIII (or SACII) on this new shielded two-conductor cable. The two

shielded wires should be the only wires connected to the Rotation Detector terminals inside the VRB housing with the other ends connected to the SACIII (or SACII) at TB1-2 and TB1-4. DO NOT use the shielding here as the "ground" side in the rotation detector circuit loop but instead tie the shielding to earth ground at the SCC's (Solar Charge Controller) ground stud/terminal only (or at another more-convenient connection to earth ground); and, to avoid problematic ground loops, the cable shield at the other end should be left disconnected (i.e., trim back but DO NOT connect the shielding to anything inside the VRB housing).

c. After this change has been implemented you should have only the two shielded wires connected to the Rotation Detector terminals (RD) up inside the VRB housing, and nothing else, as depicted in the diagram below. Ensure that the jumper wire that'd previously bridged one side of the Rotation Detector terminal to the Motor (-) terminal inside the VRB housing has been removed and discarded and that the shielding of the new two-conductor shielded cable is tied to earth ground down below at the SCC only and nowhere else.

Rotation Detection Loop

VRB-25 / SDB / SACII/III Configuration

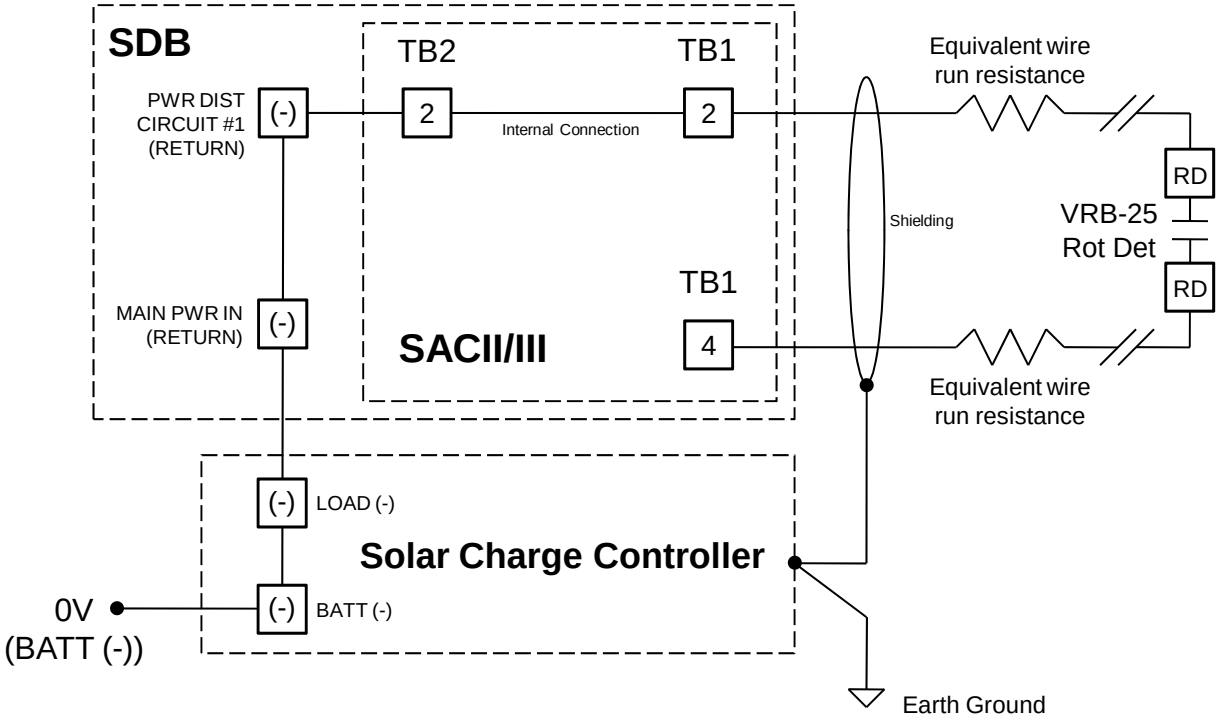

VRB-25/AVC/NAVAID Configuration. This one is a little more complicated. As in the SAC configuration, the rotation detector input from the VRB should come into the AVC at 2TB2-15 and 2TB2-16 on a two-conductor shielded cable; but in this case the two shielded wires must remain isolated from BOTH earth and system ground. You must not use the shielding here as the "ground" side in the rotation detector circuit loop either - the two wires MUST be and remain isolated from all grounds. The shielding itself, however, should be tied to earth ground at a convenient point to the AVC chassis only. Conductor size of the two shielded wires is not too critical though since it adds only a few ohms to the circuit (for example, a #20AWG wire adds only about 1-ohm per 100 feet). However, if total roundtrip resistance in the "rotation detection loop" approaches approximately 500 ohms or more, then yes, it will cause real problems with the NAVAID sensor circuit. Although currents are small in the rotation detection circuit, as determined only by the impedance and circuitry of the Channel 1 terminal (CH1) in the NAVAID sensor card (pin 11 on NAVAID card, AVC terminal 2TB8-9), which is a one-shot multivibrator comprised of a NE555 timer chip (it's a trigger for a more-involved circuit down the line in the NAVAID's operation) and a 1,000-ohm pull-up resistor onboard the NAVAID card, the critical point here is that unfortunately the pull-up resistor is fairly small at only 1,000-ohms. This means that unless the rotation detection signal is very close to zero-volts, the input voltage at CH1 may be biased a little too high to properly trigger the one-shot. Not helping the situation is that the 0-volt level picked up within the AVC at AVC's 2TB2-15 terminal, sent up to the rotation detector in the VRB, and then transmitted back to 2TB2-16 and on to the NAVAID's CH1 is not really 0-volts – it is the signal picked up on the other side of the 1CD1 current detector's switch “contacts” from 0-volts (but only while the light is on - that is, only while there is sufficient lamp current flowing through 1CD1) (see below for possible 1CD1 replacement info). The trouble here is that these switch “contacts” have a voltage drop and a resistance associated with them as well. Additionally, since the rotation detector in the VRB is a solid state relay optocoupler, as was discussed earlier, there's a bit of an insertion loss (typically 30-ohms) in the line that adds to the overall resistance in the rotation detection loop. Now, if all the resistances in this loop add up to a considerable value (approximately 500 ohms), including the voltage drop across the switch “contacts” of current detector 1CD1, we're setting up a voltage divider in conjunction with the 1,000-ohm pull-up resistor on-board the NAVAID at the trigger input to the NE555 chip that may result in a net voltage not low enough during every "0-volt" channel activity “ground” pulse to trigger the one-shot. The NE555 one-shot triggers only when the voltage at the CH1 input drops below 1/3 the supply voltage (Vcc). In this case, the Vcc is 5.0 VDC; so the voltage at CH1 input must go below 1.67 VDC in order for the one-shot circuit to trigger and reset the timer. The duration of VRB’s rotation detection pulses is very short. As a result, the voltage at CH1 input during each rotation detection pulse may be difficult to measure with a standard digital multimeter (DMM) due to limitations of the DMM’s response time. As an alternative, a digital storage oscilloscope may be used if necessary to accurately measure and confirm that this signal pulse registers below 1.67 VDC at CH1 input each time. The recommendations for this configuration are:

a. As depicted in the diagram below, ensure that the rotation detector line is a shielded two-conductor cable (i.e., three conductors total), ensure that the shielding is tied to earth ground at a convenient point in the AVC chassis, and ensure that the shielding is never used as a "signal ground" line for channel activity purposes; and, to avoid problematic ground loops, the cable shield at the other end should be left disconnected (i.e., trim back but DO NOT connect the shielding to anything inside the VRB housing).

b. Ensure timing switch S1 for CH1 is set to the proper position for each specific light as determined by its "flash" characteristic (or its rhythm). Remember that the VRB provides two rotation detection pulses per rotation. For instance, a FL5 signal in a VRB-25 gives one pulse every 15 seconds (2 RPM); a FL15 signal in a VRB-25 gives one pulse every 45 seconds (2/3 RPM).

c. Contact C2CEN's SRAN Product Line group for info on obtaining a new current detector (1CD1) w/on-board indicator LED for installation (replacement) in the AVC. The existing current detector (NK Technologies' p/n D150-2/2A and all other previously used NK models) is no longer manufactured. The LED provides a visual cue for the technician allowing a quick and accurate current threshold adjustment using the top-mounted trim pot. Proper current detector setup is critical because if the detector's switch does not close while the light is commanded on, the rotation detector channel activity signals will be blocked from reaching the NAVAID sensor and an erroneous rotation failure alarm will ensue.

Rotation Detection Loop
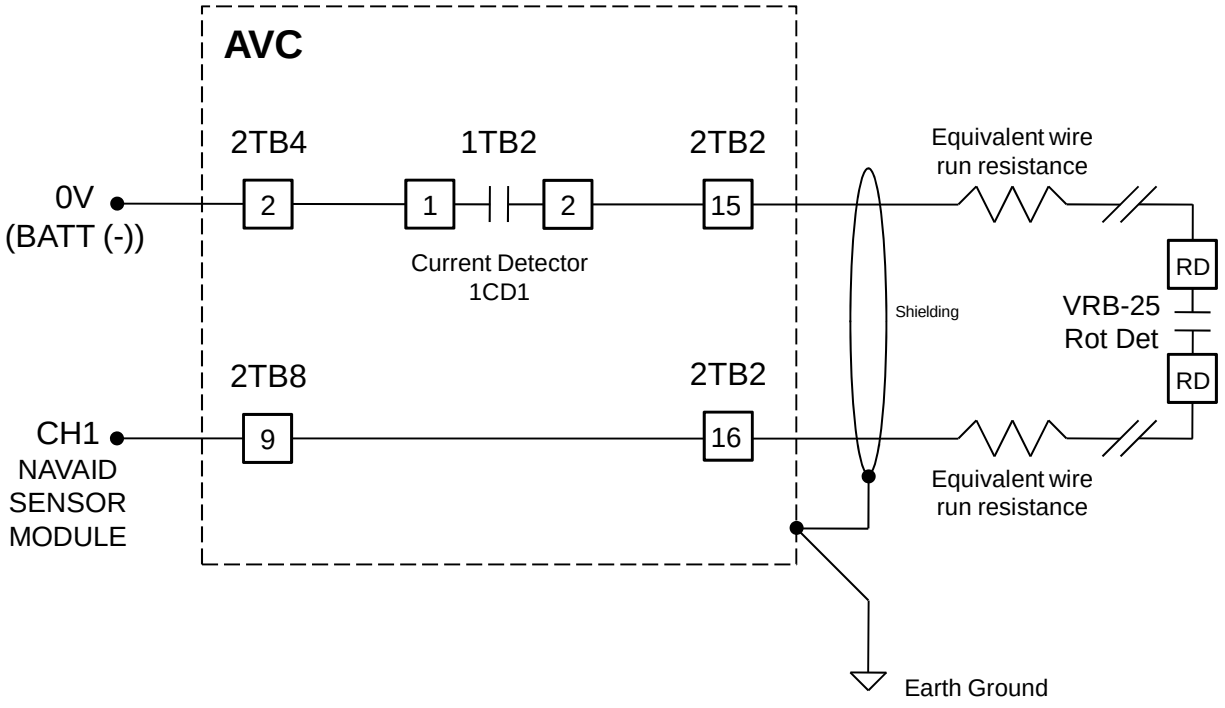
VRB-25 / AVC / NAVAID Configuration