REVISIONS				
ZONE	REV.	DESCRIPTION	DATE	APPROVED
	A	ZONE ADDY MODIFICATIONS, CORRECTED CHAPTERS ECN	1-8-92	

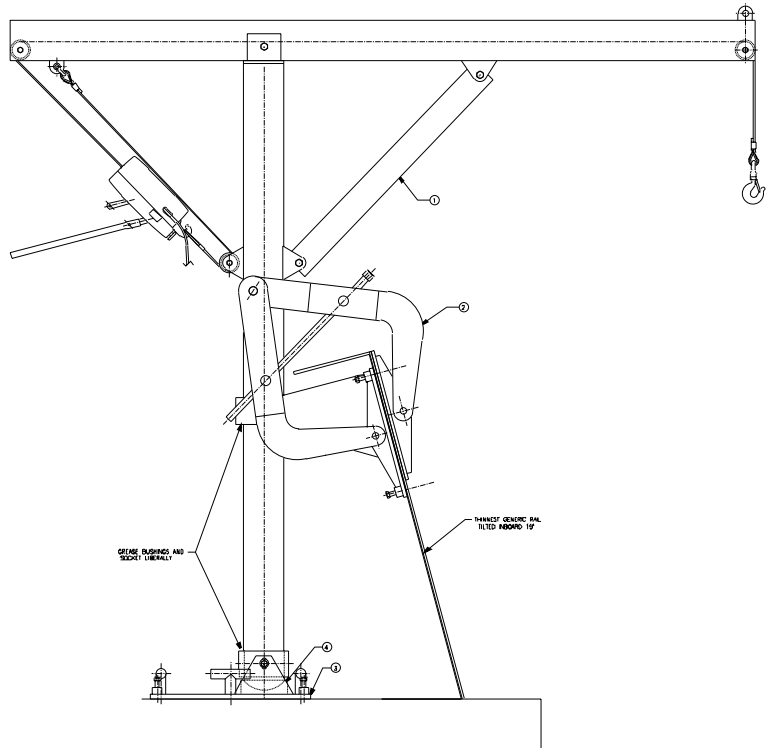

ITEM	DESCRIPTION	QTY	MATERIAL	DWG NO/SPEC	USCG DWG NO
1	DAVIT ASSEMBLY	1	VARIOUS	3-28433	171 608
2	CLAMP ASSEMBLY - DAVIT SUPPORT	1	VARIOUS	5-28432	171 570
3	BASE ASSEMBLY - DAVIT	1	ALUMINUM	3-28818	171 610
4	SOCKET	1	ALUMINUM	2-28440	171 612
5	BLOCK - LOCATING - ALUMINUM	8	ALUMINUM	2-28870	171 613
6	BLOCK - LOCATING - STEEL	8	STEEL	2-28871	171 614
7	CLAMP	8	STEEL	2-28872	171 615
8	5/8-11 UNC X 1.50 HEX HD CSCW	8	STNLS STL	-	-
9	6 GA. BOAT NAIL - 4.00 LG.	50	STNLS STL	McMASTER P/N 97027A262	
10	CABLE REEL	1	VARIOUS	McMASTER P/N 7089K13	

NOT SHOWN

REV	DATE	APPR	DESCRIPTION	BY
B/C	10/17/88	-	INCHES CHG'D TO INCHES	DAC
A/B	09/16/88	-	WAS P/N 171 [illegible] 4000 TO 3-10	DAC

CONTRACT NUMBER DTCG23-91-C-EC1087

TOLERANCES UNLESS OTHERWISE SPECIFIED:
.X ±12" .XXX ±005"
.XX ±015" .XXXX ±0005"
ANGLES .5°
RADII 03"
FINISH 125 RMS

DICHROMA, INCORPORATED
ALEXANDRIA, VIRGINIA
(703) 921-1440

CONSULTANTS

U. S. COAST GUARD
CIVIL ENGINEERING
WASHINGTON, DC

USCG. COMDT G-SEC-2
2100 2ND STREET SW
WASHINGTON, DC 20593-0001

ISSUE

MARK	DATE	DESCRIPTION
01	06/01/01	LV

A/E PROJECT NO: 236
CAD FILE NAME: 2171560001
DESIGNED BY: DAC
DRAWN BY: DAC
EDITED BY: LV
CHECKED BY: LWB

SCALE: 1/5 PLOT SCALE:

SHEET TITLE

C-SEC-2C
WASHINGTON DC

DAVIT/CLAMP ASSEMBLY

REVIEWED BY:	REVIEWED BY:	REVIEWED BY:
M		
PROJECT ENG	BRANCH CHIEF	G-SEC-2
CHIEF, CIVIL ENG		12/09/91 DATE

PROJECT NUMBER	DRAWING NUMBER
98-	171 560

DISCIPLINE/SHT NO

SHEET 1 OF 1