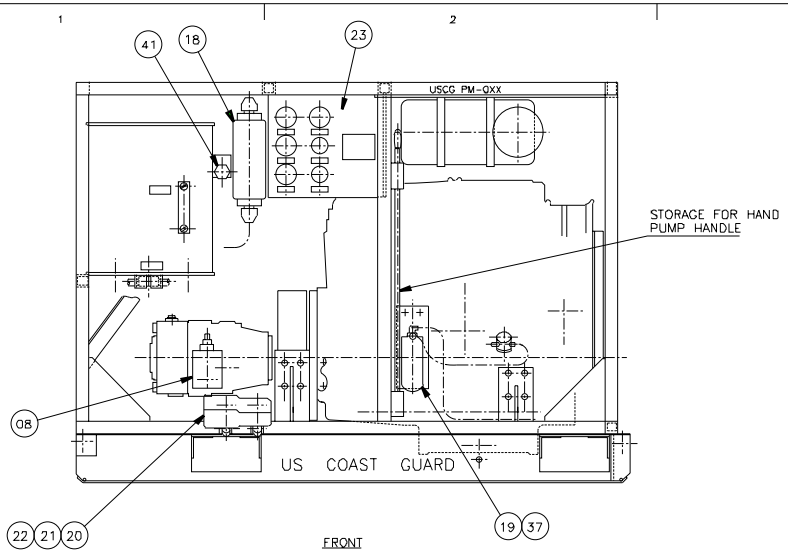

FRONT

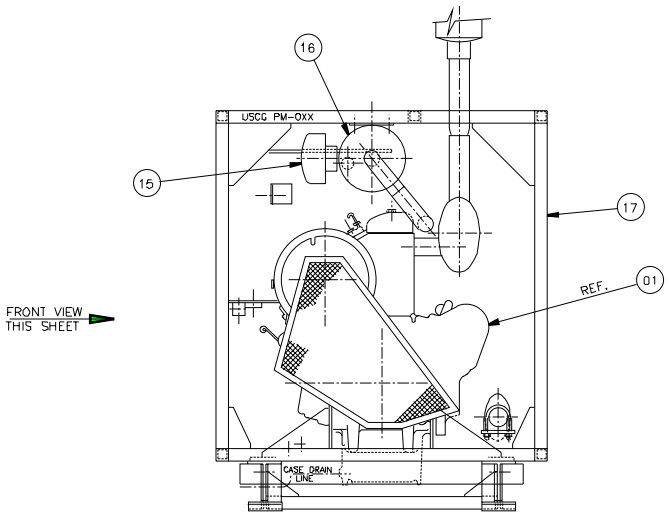

PULLEY END

NOTE:

SEE SHEET NO. 1 FOR LIST OF MATERIAL

CONTRACT NO DTCG23-91-C-EC1071

UNLESS OTHERWISE SPECIFIED:
ALL DIMENSIONS ARE IN INCHES.
TOLERANCES: DIM. XX±.03
ANG.

DICHROMA, INCORPORATED
ALEXANDRIA, VIRGINIA
(703) 921-1440

CONSULTANTS

U. S. COAST GUARD
CIVIL ENGINEERING
WASHINGTON, DC

USCG, COMDT G-SEC-2
2100 2ND STREET SW
WASHINGTON, DC 20593-0001

ISSUE		
01	07/18/01	LV
MARK	DATE	DESCRIPTION

A/E PROJECT NO 254
CAD FILE NAME. Z17600D02
DESIGNED BY. M.P.C.
DRAWN BY: R.T.
EDITED BY:
CHECKED BY:

SCALE: 1/4" = 1'-0" PLOT SCALE

SHEET TITLE

G-SEC-2C
WASHINGTON DC

HYD PWR SOURCE ASS'Y

REVIEWED BY:	REVIEWED BY:	REVIEWED BY:
PROJECT ENG.	BRANCH CHIEF	G-ECV-3D

CHIEF, CIVIL ENG — DATE

PROJECT NUMBER	DRAWING NUMBER
	17600
DISCIPLINE/SHT NO	
98-	SHEET 2 OF 2